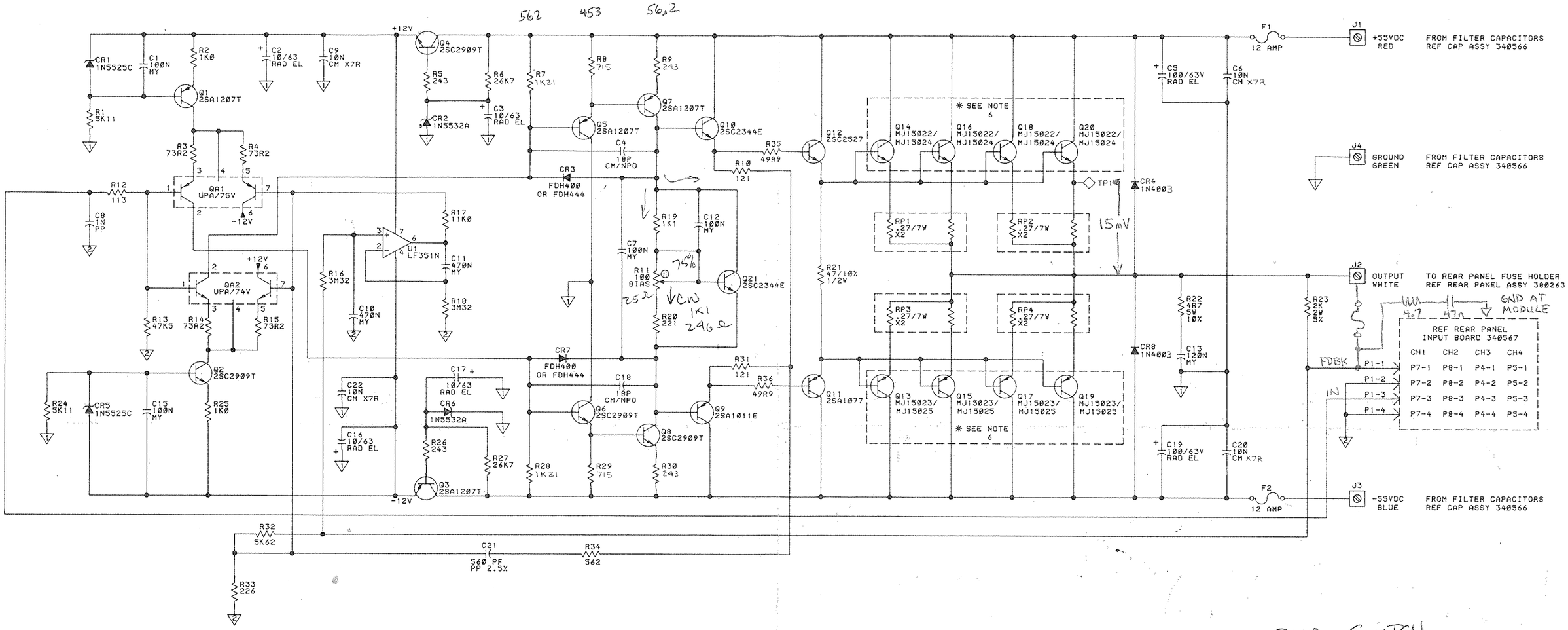


PWR SWITCH
220nF & 470Ω 1/4W

NOTES:

UNLESS OTHERWISE SPECIFIED;

1. ALL RESISTORS ARE EXPRESSED IN OHMS AND ARE 1/4W, 1%.
2. ALL CAPACITORS ARE EXPRESSED IN MICROFARADS.
3. ALL MYLAR CAPACITORS ARE +/-5%.
4. ALL RAD EL CAPACITORS ARE +80%/-10%.
5. ALL CM X7R CAPACITORS ARE +/-10%.
6. Q13 THRU Q20 ARE MOUNTED TO THE HEATSINK. THE BASE AND EMITTER LEADS ARE SOCKETED TO THE PCB. THE COLLECTORS ARE THE TRANSISTOR CASES AND ARE SCREWED TO THE SPACERS. REF HEATSINK ASSY, DWG #380264.
7. REF SYSTEM WIRING DIAGRAM, #340639, FOR CABLING INFORMATION.
8. ▽ DESIGNATES POWER GROUND.
   ▽ DESIGNATES SIGNAL GROUND.

| REFERENCE DESIGNATION | |
|---|---|
| LAST USED | NOT USED |
| C22 | C14 |
| CR8 | - |
| F2 | - |
| J4 | - |
| P1 | - |
| Q21 | - |
| QA2 | - |
| R36 | - |
| RP4 | - |
| U1 | - |
| TP1 | - |

| REV | DESCRIPTION | DR APP | DATE |
|---|---|---|---|
| | R303 | | |

REVISIONS

THESE DRAWINGS AND SPECIFICATIONS ARE THE PROPERTY OF dbx AND SHALL NOT BE REPRODUCED, COPIED OR USED AS THE BASIS FOR MANUFACTURE OR SALE OF APPARATUS WITHOUT EXPRESSLY WRITTEN AUTHORIZATION. dbx

| APPROVAL | | | |
|---|---|---|---|
| PRELIM | DATE | FINAL | DATE |
| DRAWN REH | 8/31/87 | | |
| CHECKED | 9/14/87 | CHECKED | |
| PROJ ENG | 9/14/87 | PROJ ENG | |
| CH ENG | 9/14/87 | CH ENG | |
| DFT MGR PT | 9/14/87 | RELEASED | |

BX1 | USED ON

dbx NEWTON, MA. Ø2195

# SCHEMATIC BX1 POWER AMPLIFIER MODULE BOARD

| SCALE: NONE | SIZE | NUMBER | REV |
|---|---|---|---|
| SHEET 1 OF 1 | C | 340565 | ØØ |

546-574

S-BX1-MOD-B(PCB,BX1)

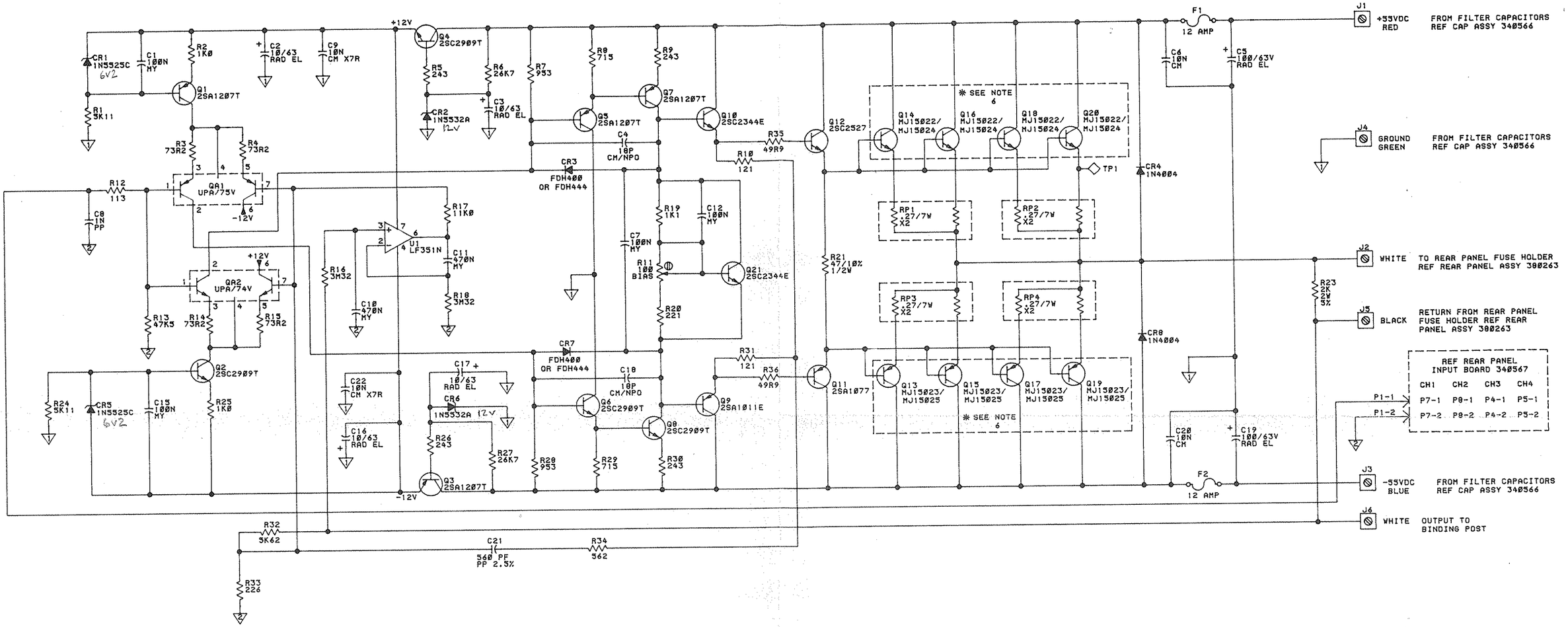


| REFERENCE DESIGNATION | |
|---|---|
| LAST USED | NOT USED |
| C22 | C13, C14 |
| CR8 | - |
| F2 | - |
| J6 | - |
| P1 | - |
| Q21 | - |
| QA2 | - |
| R36 | R22 |
| RP4 | - |
| U1 | - |
| TP1 | - |

NOTES:

UNLESS OTHERWISE SPECIFIED;

1. ALL RESISTORS ARE EXPRESSED IN OHMS AND ARE 1/4W, 1%.
2. ALL CAPACITORS ARE EXPRESSED IN MICROFARADS.
3. ALL MYLAR CAPACITORS ARE +/-5%.
4. ALL RAD EL CAPACITORS ARE +80%/-10%.
5. ALL CM X7R CAPACITORS ARE +/-10%.
6. Q13 THRU Q20 ARE MOUNTED TO THE HEATSINK. THE BASE AND EMITTER LEADS ARE SOCKETED TO THE PCB. THE COLLECTORS ARE THE TRANSISTOR CASES AND ARE SCREWED TO THE SPACERS. REF HEATSINK ASSY, DWG #380264.
7. REF SYSTEM WIRING DIAGRAM, #340639, FOR CABLING INFORMATION.
8. ▽ DESIGNATES POWER GROUND.
   ▽ DESIGNATES SIGNAL GROUND.

EXPERIMENTAL MODULES ONLY

| REVISIONS | DESCRIPTION | DR | APP | DATE |
|---|---|---|---|---|
| | | | | |

THESE DRAWINGS AND SPECIFICATIONS ARE THE PROPERTY OF dbx AND SHALL NOT BE REPRODUCED, COPIED OR USED AS THE BASIS FOR MANUFACTURE OR SALE OF APPARATUS WITHOUT EXPRESSLY WRITTEN AUTHORIZATION. dbx

| APPROVAL | | | |
|---|---|---|---|
| PRELIM | DATE | FINAL | DATE |
| DRAWN REH | 8/31/87 | JH | 12/24/87 |
| CHECKED JN | 9/16/87 | CHECKED | |
| PROJ ENG JRA | 9/16/87 | PROJ ENG | |
| CH ENG GKH | 9/16/87 | CH ENG | |
| DFT MGR PT | 9/16/87 | RELEASED | |

BX1 | USED ON

dbx NEWTON, MA. Ø2195

# SCHEMATIC BX1 POWER AMPLIFIER MODULE BOARD

| SCALE: NONE | SIZE | NUMBER | REV |
|---|---|---|---|
| SHEET 1 OF 1 | C | 340565 | ØØ |

S-BX1-MOD-D(PCB, BX1)

NOTE:

1. REF SYSTEM WIRING DIAGRAM, #340639, FOR CABLING INFORMATION.

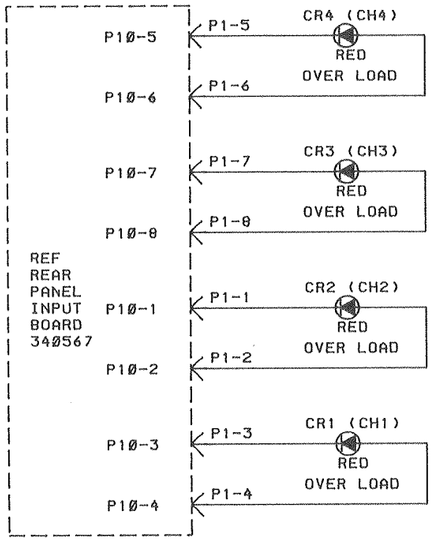


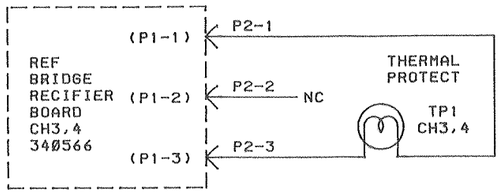


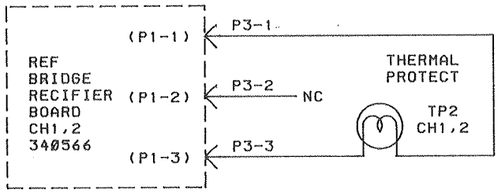


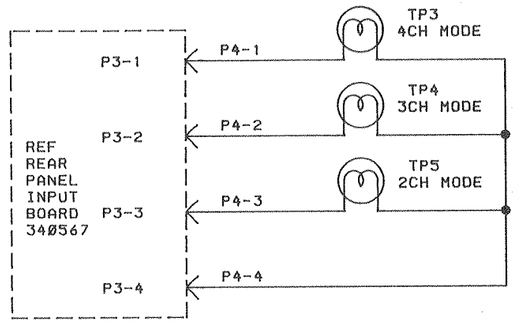


| REFERENCE DESIGNATION | |
|---|---|
| LAST USED | NOT USED |
| P4 | - |
| TP5 | - |
| CR4 | - |

| REV | DESCRIPTION | DR | APP | DATE |
|---|---|---|---|---|
| | | | | |

REVISIONS

THESE DRAWINGS AND SPECIFICATIONS ARE THE PROPERTY OF dbx AND SHALL NOT BE REPRODUCED. COPIED OR USED AS THE BASIS FOR MANUFACTURE OR SALE OF APPARATUS WITHOUT EXPRESSLY WRITTEN AUTHORIZATION. dbx

| APPROVAL | | | |
|---|---|---|---|
| PRELIM | DATE | FINAL | DATE |
| DRAWN REH | 8-31-87 | | 9/11/87 |
| CHECKED | 9/14/87 | CHECKED | |
| PROJ ENG | 9/14/87 | PROJ ENG | |
| CH ENG | 9/14/87 | CH ENG | |
| DFT MGR | 9/14/87 | RELEASED | |

BX1 | USED ON

dbx NEWTON, MA. 02195

# SCHEMATIC
# BX1
# FRONT PANEL BOARD

| SCALE: NONE | SIZE | NUMBER | REV |
|---|---|---|---|
| SHEET 1 OF 1 | B | 340568 | ØØ |

S-BX1-FP-A(PCB,BX1)

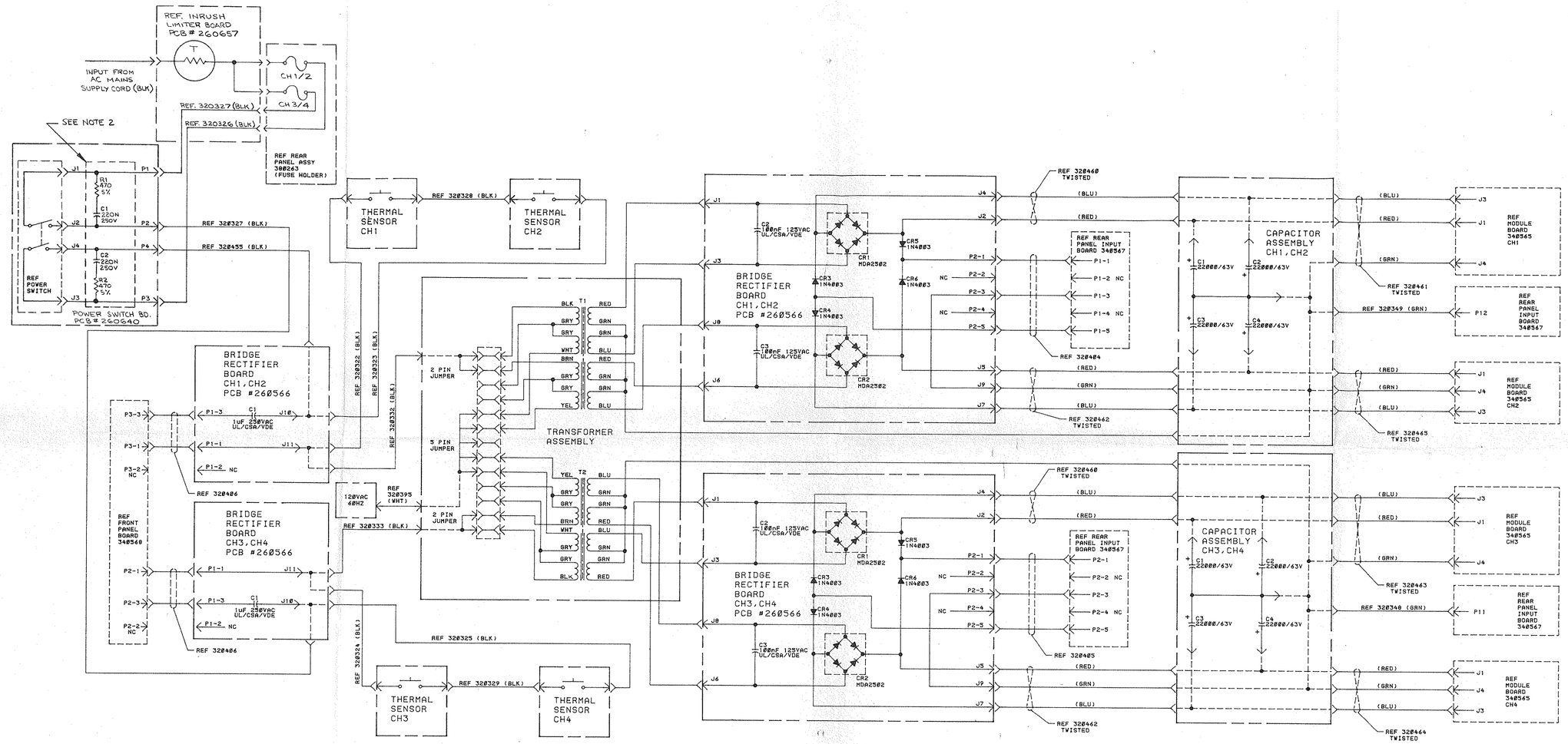


| BRIDGE RECTIFIER | | POWER SWITCH | | XFMR ASSY | | CAP ASSY | |
|---|---|---|---|---|---|---|---|
| LAST USED | NOT USED | LAST USED | NOT USED | LAST USED | NOT USED | LAST USED | NOT USED |
| J11 | - | J4 | - | T2 | - | C4 | - |
| C3 | - | C2 | - | | | | |
| CR6 | - | P4 | - | | | | |
| P2 | - | R2 | | | | | |

NOTES;

1. REF SYSTEM WIRING DIAGRAM, #340639, FOR CABLING INFORMATION.
2. FOR ALTERNATE PART SEE dbx PART NO. 380288 (CAP./RESISTOR ASSEMBLY).

| REV | DESCRIPTION | DR | APP | DATE |
|---|---|---|---|---|
| | REVISIONS | | | |

THESE DRAWINGS AND SPECIFICATIONS ARE THE PROPERTY OF dbx AND SHALL BE RETURNED UPON REQUEST. THEY ARE NOT TO BE USED AS THE BASIS FOR MANUFACTURE OR SALE WITHOUT OUR PERMISSION, EXPRESSLY WRITTEN AUTHORIZATION.

dbx

| APPROVAL | | | |
|---|---|---|---|
| PRELIM | DATE | FINAL | DATE |
| DRAWN 8.27.87 | 8.27.87 | | |
| CHECKED 11/10/87 | 11/10/87 | CHECKED | |
| PROJ ENG 11/16/87 | 11/16/87 | PROJ ENG | |
| CH ENG 11/19/87 | 11/19/87 | CH ENG | |
| DFT MGR 11/20/87 | 11/20/87 | RELEASED | |

BX1 | USED ON

dbx NEWTON, MA. 02195

SCHEMATIC
BX1
POWER SUPPLY

| SCALE: NONE | SIZE | NUMBER | REV |
|---|---|---|---|
| SHEET 1 OF 1 | D | 340566 | ØØ |

S-BX1-PWRSPLY-A(PCB,BX1)

REAR PANEL INPUT PCB #260567

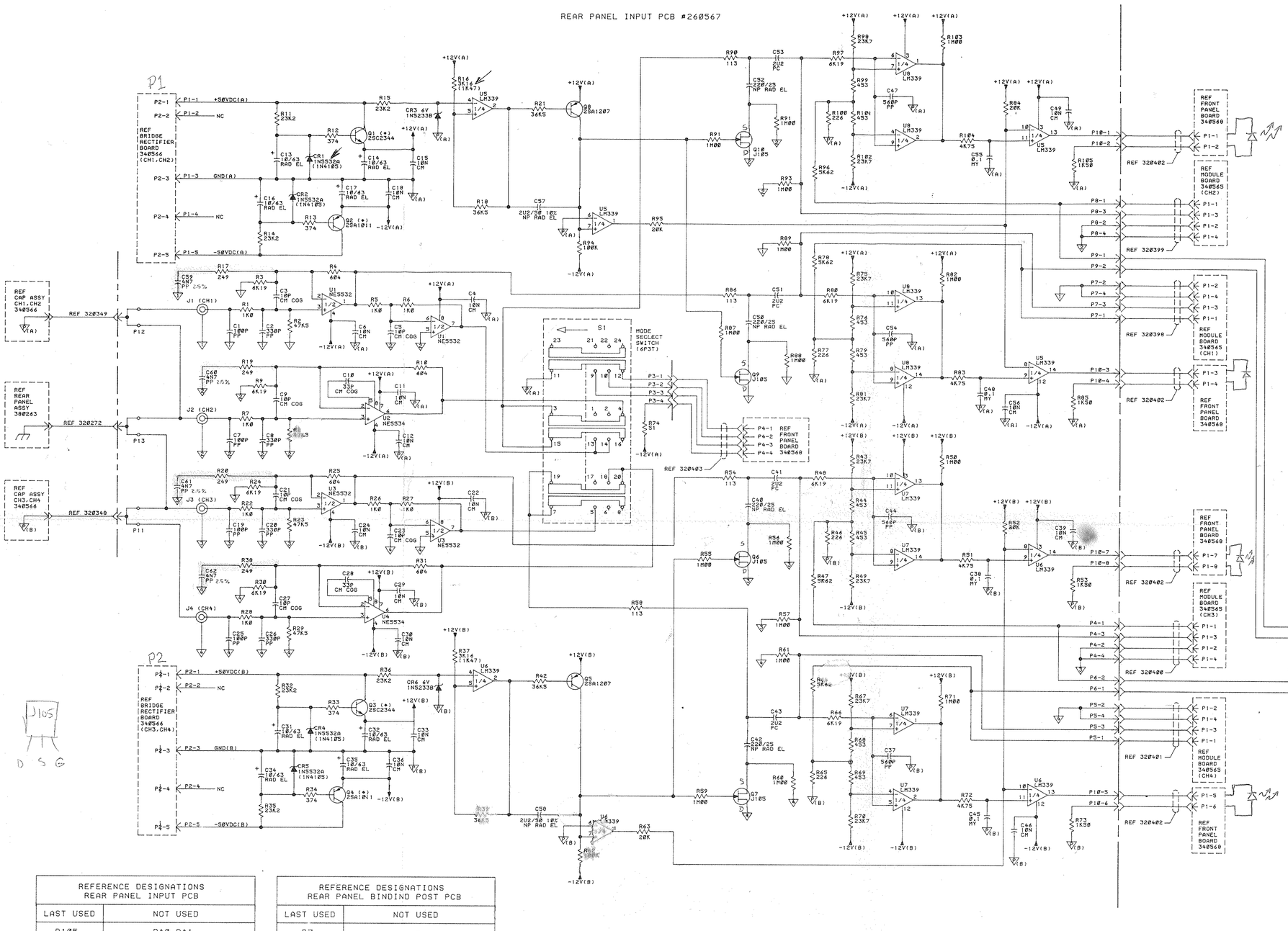


NOTES:

UNLESS OTHERWISE SPECIFIED:

1. ALL RESISTORS ARE EXPRESSED IN OHMS AND ARE 1/4W, 1%.
2. ALL CAPACITORS ARE EXPRESSED IN MICROFARADS.
3. ALL MYLAR CAPACITORS ARE +/-5%
4. ALL RAD EL CAPACITORS ARE +80%/-10%.
5. ALL COG CERAMIC DISC CAPACITORS ARE +/-5%.
6. (*) DENOTES HEATSINK IS ATTACHED TO DEVICE.
7. REF SYSTEM WIRING DIAGRAM, #340639, FOR CABLING INFORMATION.
8. (SYMBOL) DENOTES ALTERNATE DEVICE TYPE. ALTERNATE VALUES ARE GIVEN WITHIN THE PARENTHESIS FOR USE WITH SPECIFIED DEVICE TYPE.

ALTERNATE TYPE AUTHORIZATION

1N4105, 11.0V ZENER DIODE IN PLACE OF 1N5532A 12.0V ZENER DIODE. THIS AFFECTS R16 AND R37 WHICH SHOULD BE 1K47 WHEN 1N4105'S ARE USED.

9. ▽(A) DENOTES POWER GROUND CH1 AND 2
   ▽(B) DENOTES POWER GROUND CH3 AND 4
   ▽ DENOTES CH1 SIGINAL GROUND PLANE
   ▽ DENOTES CH2 SIGINAL GROUND PLANE
   ▽ DENOTES CH3 SIGINAL GROUND PLANE
   ▽ DENOTES CH4 SIGINAL GROUND PLANE
10. ALL POLYCARBONATE CAPACITORS ARE +/-5%.

REAR PANEL BINDING POST PCB #260641

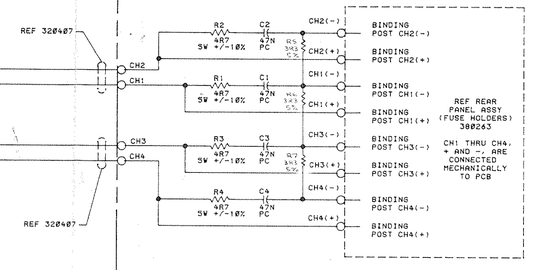


| REFERENCE DESIGNATIONS REAR PANEL INPUT PCB | |
|---|---|
| LAST USED | NOT USED |
| R105 | R40,R41 |
| C62 | - |
| CR6 | - |
| J4 | - |
| U8 | - |
| Q10 | - |
| S1 | - |
| P13 | - |

| REFERENCE DESIGNATIONS REAR PANEL BINDIND POST PCB | |
|---|---|
| LAST USED | NOT USED |
| R7 | - |
| C4 | - |
| CH4 | - |

| REV | DESCRIPTION | DR | APP | DATE |
|---|---|---|---|---|
| | REVISIONS | | | |
| R32.5 | | | | |

THESE DRAWINGS AND SPECIFICATIONS ARE THE PROPERTY OF dbx AND SHALL NOT BE REPRODUCED OR USED AS THE BASIS FOR MANUFACTURE OR SALE OF APPARATUS WITHOUT EXPRESS WRITTEN AUTHORIZATION. dbx

| APPROVAL | PRELIM | DATE | FINAL | DATE |
|---|---|---|---|---|
| DRAWN | | 9/28/87 | | |
| CHECKED | JN | 11/6/87 | CHECKED | |
| PROJ ENG | JRA | 11/4/87 | PROJ ENG | |
| CH ENG | GKH | 11/4/87 | CH ENG | |
| QFT MGR | PT | 11/6/87 | RELEASED | |

BX1 | USED ON

dbx NEWTON, MA. 02195

SCHEMATIC
BX1 POWER AMPLIFIER
REAR PANEL, BINDING POST/INPUT BOARDS

| SCALE: NONE | SIZE | NUMBER | REV |
|---|---|---|---|
| SHEET 1 OF 1 | D | 340567 | 00 |

S=BX1-IN/BIND-C(PCB.BX1)

| BX1 XFMR LEAD LENGHT CHART | | | | | |
|---|---|---|---|---|---|
| | COLOR | FRONT CH 1/2 XFMR | REAR CH 3/4 XFMR | | |
| PRIMARY | BLK 1 | 7.25 | 1 | 4.00 | BLK |
| | GRY PAIR* 2 | ~~8.50~~ 8.0 | 2 | ~~4.75~~ 4.5 | GRY |
| | WHT 3 | 8.75 | 3 | 5.00 | WHT |
| | BRN 4 | 7.50 | 4 | 4.25 | BRN |
| | GRY PAIR* 5 | ~~8.00~~ 8.5 | 5 | ~~4.50~~ 4.75 | GRY |
| | YEL 6 | 9.00 | 6 | 5.25 | yel |
| SECONDARY | RED 7 | 18.50 | 7 | 14.75 | RED |
| | GRNS 8&9 | 12.75 | 8&9 | 12.75 | GRN |
| | BLU 10 | 17.25 | 10 | 13.75 | BLU |
| | RED 11 | 15.75 | 11 | 11.75 | Red |
| | GRNS 12&13 | 12.75 | 12&13 | 12.75 | GRN |
| | BLU 14 | 15.00 | 14 | 11.00 | BLU |

* SEE NOTE 3

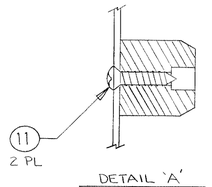


DETAIL 'A'
SCALE : NONE

NOTES:

1. REF PARTS LIST PL380258.
2. CUT XFMR LEADS TO LENGTHS SHOWN IN TABLE, THEN STRIP .30 ± .06.
3. ENDS OF GREY WIRE PAIRS ARE TO BE TWISTED TOGETHER BEFORE INSERTING INTO BARRIER STRIP.

4A. CRIMP ONE RING TERMINAL ITEM 17 ONTO EACH PAIR OF GREEN XFMR LEADS.
B. CRIMP ONE RING TERMINAL ITEM 5 ONTO EACH BLUE, RED XFMR WIRES.

5A. SNAP COLORED TAGS ONTO TERMINAL STRIP ITEM 12 IN THE ORDER SHOWN. TAGS ARE PROVIDED WITH THE TERMINAL STRIP

B. ASSEMBLE TERMINAL STRIP ITEM 12 TO THE REAR OF THE XFMR BRKT ITEM 4 BEFORE BOLTING BRKT TO REST OF ASSY

6. FOR COMPLETE ASSEMBLY INSTRUCTIONS SEE ASSEMBLY PROCEDURE 450002.
7. ATTACH FLEXIBLE GROMMET (ITEM 26) TO ALL EDGES WHERE WIRE MAY CHAFE.

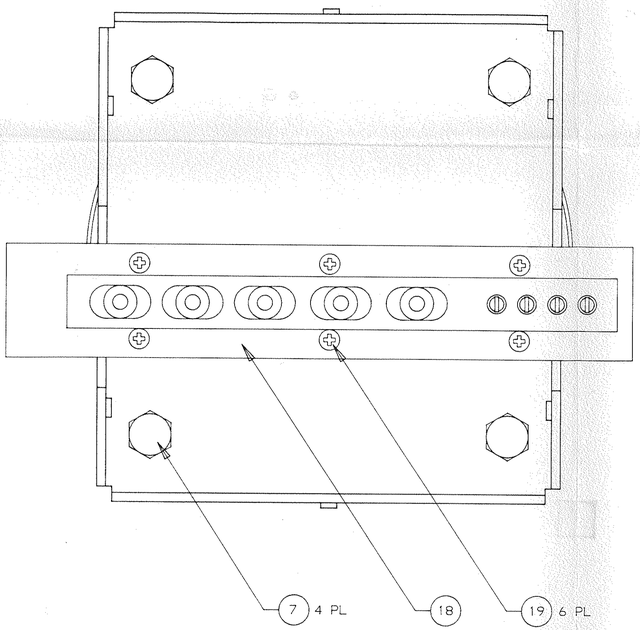


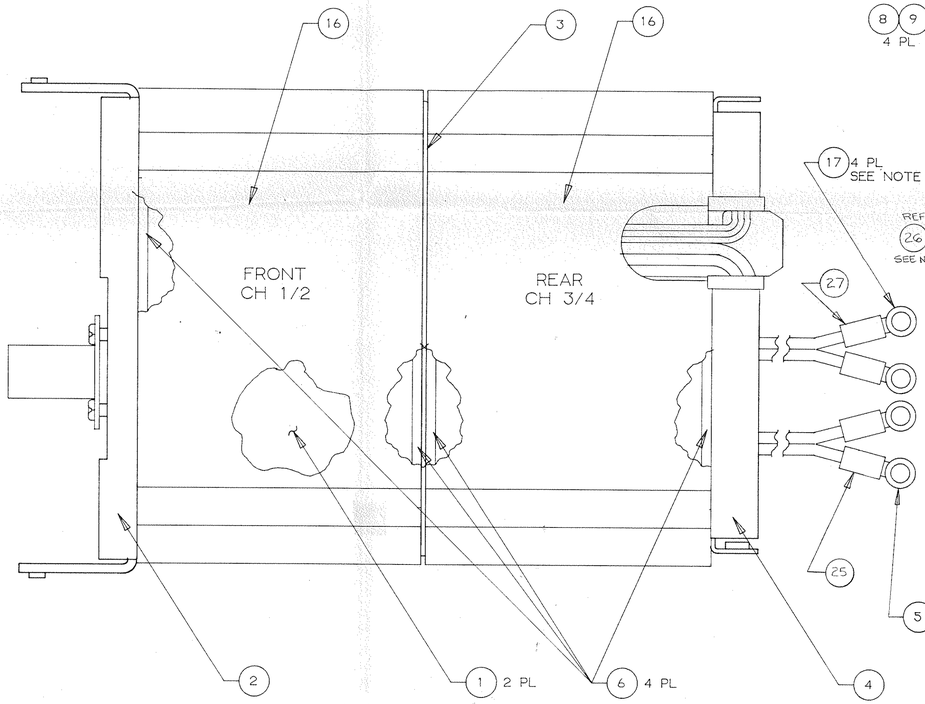


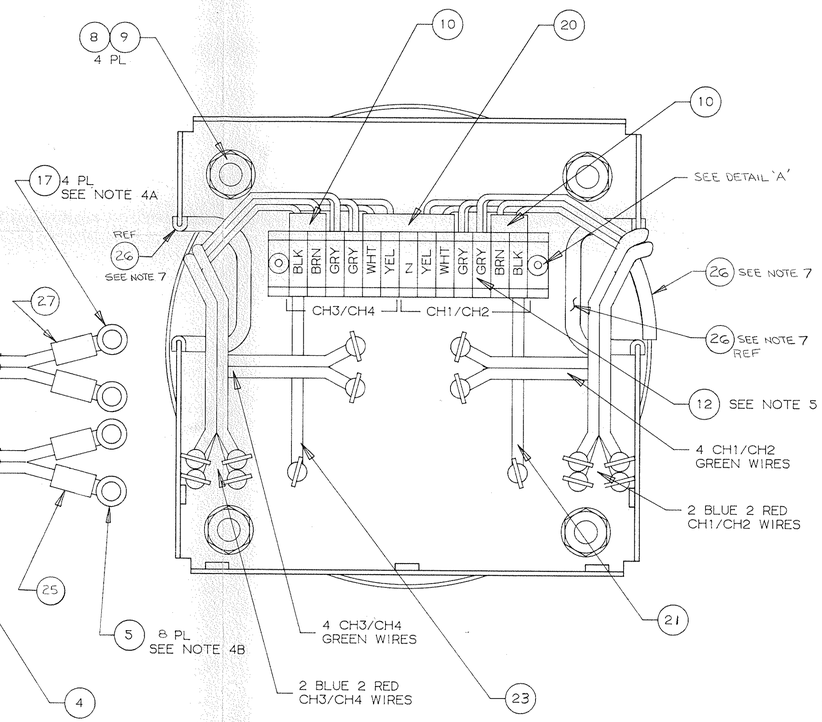


| REV | DESCRIPTION | DWN | APP | DATE |
|---|---|---|---|---|
| | REVISIONS | | | |

THESE DRAWINGS AND SPECIFICATIONS ARE THE PROPERTY OF dbx AND SHALL NOT BE REPRODUCED, COPIED OR USED AS THE BASIS FOR MANUFACTURE OR SALE OF APPARATUS WITHOUT EXPRESSLY WRITTEN AUTHORIZATION.

UNLESS OTHERWISE SPECIFIED ALL DIMENSIONS ARE IN INCHES AND/OR MILLIMETERS (mm)

TOLERANCES ON INCHES
.XX +/- .015 .XXX +/- .005

TOLERANCES ON MILLIMETERS (mm)
.00 +/- .38mm .000 +/- .13mm

ANGLES +/- 1/2 FRACTIONS +/- 1/32

APPROVED FOR PRODUCTION TOOLING

APPROVED DATE

| APPROVAL | | | |
|---|---|---|---|
| PRELIM | DATE | FINAL | DATE |
| DRAWN GWP | 8/28/87 | | |
| CHECKED DDL | 8/28/87 | CHECKED | |
| PROJ ENG | 9/2/87 | PROJ ENG | |
| CH ENG | | CH ENG | |
| DFT MGR DDL | 9/2/87 | RELEASED | |

| BX1 | USED ON |
|---|---|

dbx, NEWTON , MA. 02195

BX1
TRANSFORMER
ASSEMBLY

| SCALE 1/1 | SIZE | NUMBER | REV |
|---|---|---|---|
| SHT 1 OF 1 | D | 380258 | 00D |

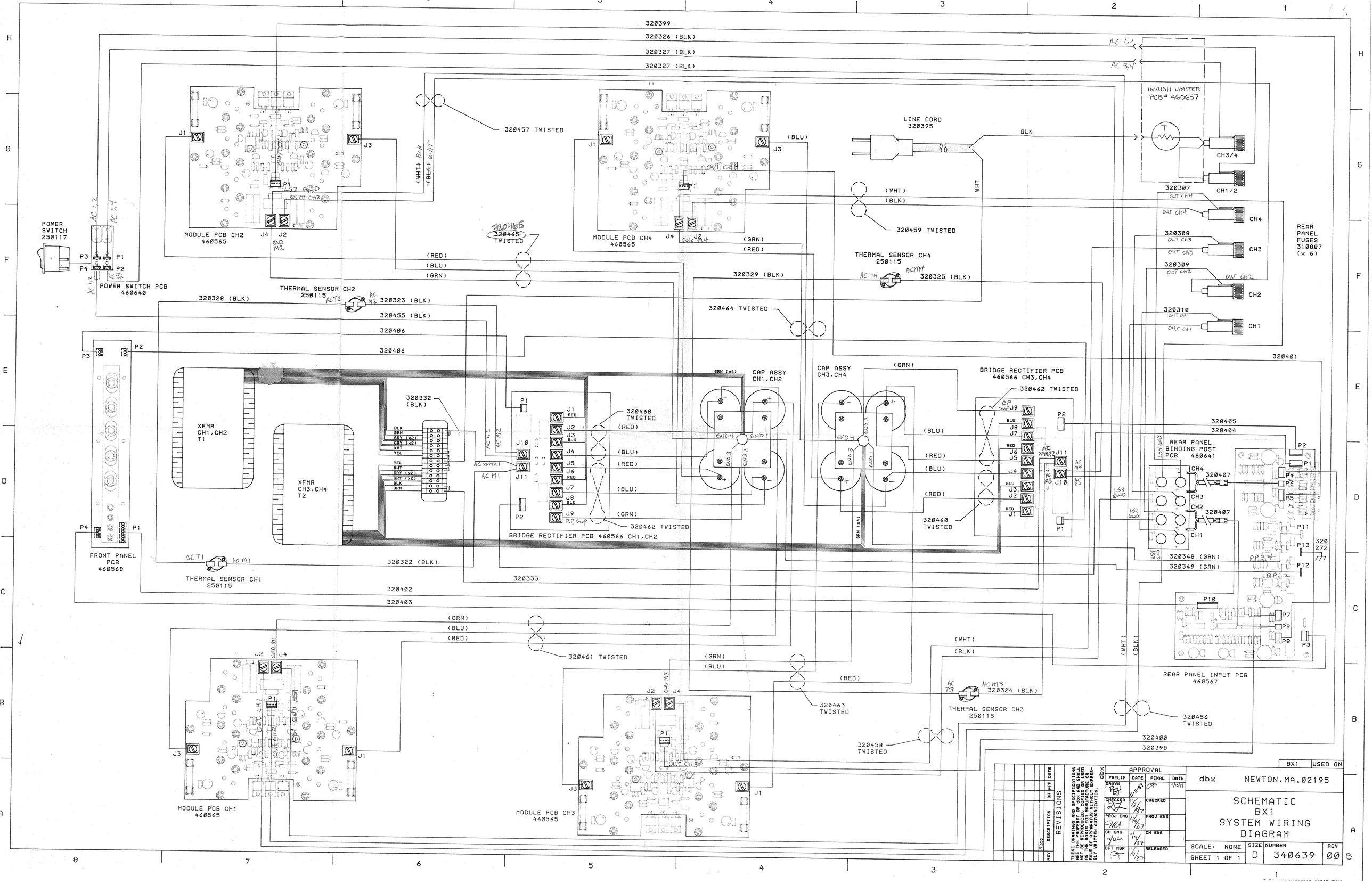


| REV | DESCRIPTION | DR | APP | DATE |
|---|---|---|---|---|
| | REVISIONS | | | |

THESE DRAWINGS AND SPECIFICATIONS ARE THE PROPERTY OF dbx AND SHALL NOT BE REPRODUCED, COPIED OR USED AS THE BASIS FOR MANUFACTURE OR SALE OF APPARATUS WITHOUT EXPRESSLY WRITTEN AUTHORIZATION.

| APPROVAL | | | |
|---|---|---|---|
| PRELIM | DATE | FINAL | DATE |
| DRAWN | 11-2-87 | | 11/16/87 |
| CHECKED | 11/3/87 | CHECKED | |
| PROJ ENG | 11/9/87 | PROJ ENG | |
| CH ENG | 11/9/87 | CH ENG | |
| DFT MGR | 11/9/87 | RELEASED | |

BX1 USED ON

dbx NEWTON, MA. 02195

SCHEMATIC
BX1
SYSTEM WIRING
DIAGRAM

SCALE: NONE | SIZE D | NUMBER 340639 | REV 00

SHEET 1 OF 1