DENON

Hi-Fi AV Surround Amplifier

SERVICE MANUAL

MODEL AVC-3800

AV SURROUND AMPLIFIER

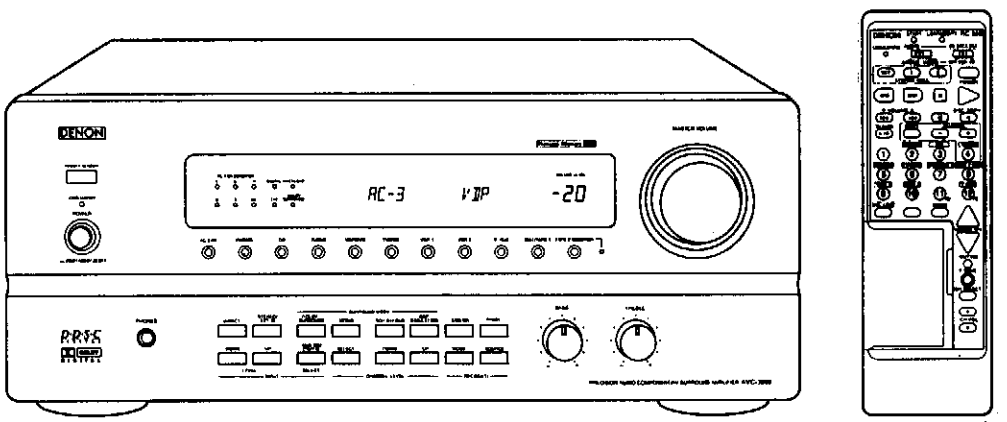

— CONTENTS —

OPERATING INSTRUCTIONS ..... 2~16
WIRE ARRANGEMENT 17
DISASSEMBLY ..... 18~21
LEVEL DIAGRAM 22
ADJUSTMENT 23
FUNCTION OF NEW CIRCUIT 24, 25
SEMICONDUCTORS ..... 26~46
PRINTED WIRING BOARD ..... 47~52
NOTE FOR PARTS LIST 53
PRINTED WIRING BOARD PARTS LIST ..... 54~69
PARTS LIST OF EXPLODED VIEW 70
EXPLODED VIEW OF CHASSIS AND CABINET 71
BLOCK DIAGRAM 72
WIRING DIAGRAM 73
SCHEMATIC DIAGRAM - (1/17~16/17) ..... 74~87
REMOTE CONTROL UNIT (RC-820) 89, 90
SCHEMATIC DIAGRAM 89
PARTS LIST 90

● Some illustrations using in this service manual are slightly different from the actual set.

NIPPON COLUMBIA CO., LTD.

■ **We greatly appreciate your purchase of the AVC-3800.**
■ **To be sure you take maximum advantage of all the features the AVC-3800 has to offer, read these instructions carefully and use the set properly. Be sure to keep this manual for future reference should any questions or problems arise.**

TABLE OF CONTENTS

1 Note on Use 2
2 Before Using 3
3 Cautions on Installation 3
4 Cautions on Handling 3
5 Connections 4–8
6 System Setup 9–14
7 Remote Control Unit 14–18
8 Operations 19–22
9 Using the Surround Function 23–28
10 Last Function Memory 28
11 Initialization of the Microprocessor 28
12 Troubleshooting 29
13 Specifications 30

• ACCESSORIES

Check that the following parts are included in addition to the main unit:

① Operating instructions 1	④ R6P/AA batteries 2	
② Service station list 1	⑤ AC power cord	(for Asia model) 2
③ Remote control unit (RC-820) 1		(for Taiwan R.O.C. model) 1

1 NOTE ON USE



• Avoid high temperatures
Allow for sufficient heat dispersion when installed on a rack.



• Handle the power cord carefully.
Hold the plug when unplugging the cord.



• Keep the set free from moisture, water, and dust.



• Unplug the power cord when not using the set for long periods of time.



*(For sets with ventilation holes)
• Do not obstruct the ventilation holes.



• Do not let foreign objects in the set.

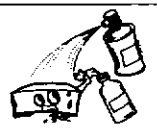

• Do not let insecticides, benzene, and thinner come in contact with the set.



• Never disassemble or modify the set in any way.

2 BEFORE USING

Pay attention to the following before using this unit:

• **Moving the set**
To prevent short circuits or damaged wires in the connection cords, always unplug the power cord and disconnect the connection cords between all other audio components when moving the set.

• **Before turning the power switch on**
Check once again that all connections are proper and that there are not problems with the connection cords. Always set the power switch to the standby position before connecting and disconnecting connection cords.

3 CAUTIONS ON INSTALLATION

Noise or disturbance of the picture may be generated if this unit or any other electronic equipment using microprocessors is used near a tuner or TV.
If this happens, take the following steps:
• Install this unit as far as possible from the tuner or TV.
• Set the antenna wires from the tuner or TV away from this unit's power cord and input/output connection cords.
• Noise or disturbance tends to occur particularly when using indoor antennas or 300 Ω/ohms feeder wires. **We recommend using outdoor antennas and 75 Ω/ohms coaxial cables.**

For heat dispersal, leave at least 10 cm of space between the top, back and sides of this unit and the wall or other components.

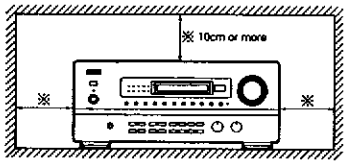

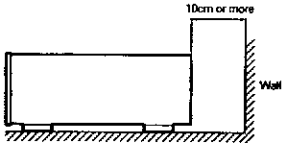

4 CAUTIONS ON HANDLING

• **Switching the input function when input jacks are not connected**
A clicking noise may be produced if the input function is switched when nothing is connected to the input jacks. If this happens, either turn down the MASTER VOLUME control or connect components to the input jacks.

• **Muting of PRE OUT jacks and SPEAKER terminals**
The PRE OUT jacks and SPEAKER terminals include a muting circuit. Because of this, the output signals are greatly reduced for several seconds after the power switch is turned on or input function, surround mode or any other set-up is changed. If the volume is turned up during this time, the output will be very high after the muting circuit stops functioning. Always wait until the muting circuit turns off before adjusting the volume.

• **Store this instructions in a safe place.**
After reading, store this instructions a safe place.

• **Note that the illustrations in this instructions may differ from the actual set for explanation purposes.**

• **Whenever the power switch is in the OFF state, the apparatus is still connected on AC line voltage.**
Please be sure to unplug the cord when you leave home for, say, a vacation.

5 CONNECTIONS

- Do not plug in the power cord until all connections have been completed.
- Be sure to connect the left and right channels properly (left with left, right with right).
- Insert the plugs securely. Incomplete connections will result in the generation of noise.
- Note that binding pin plug cords together with power cords or placing them near a power transformer will result in generating hum or other noise.
- Noise or humming may be generated if a connected audio equipment is used independently without turning the power of this unit on. If this happens, turn on the power of the this unit.

5–1 Connecting the audio components

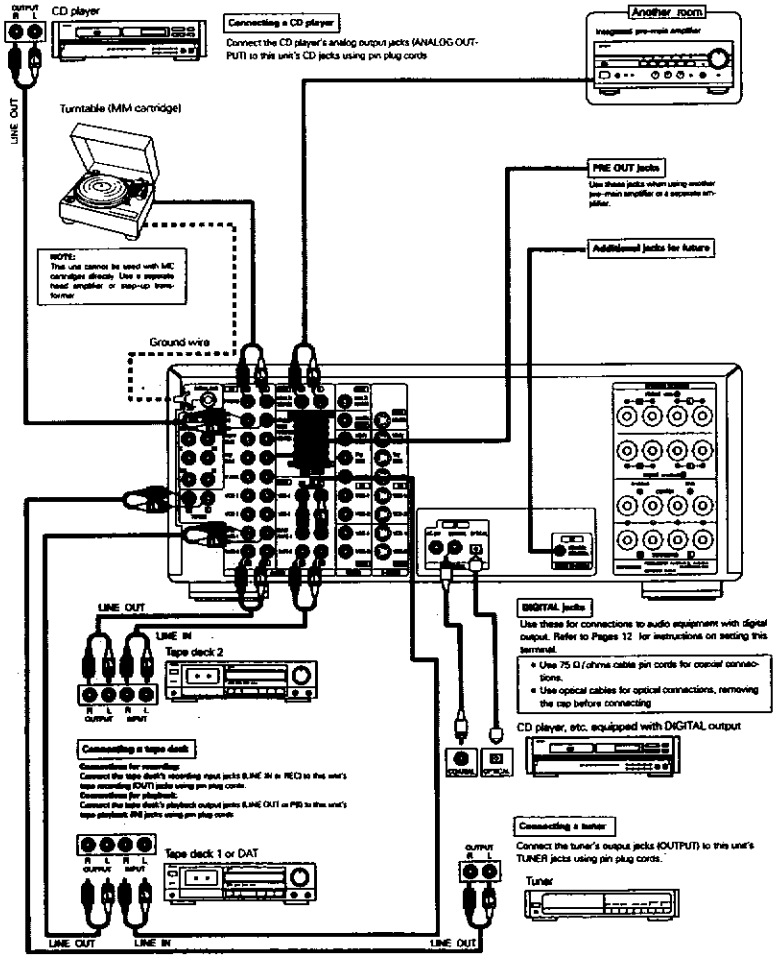

5–2 Connecting the video equipments

To connect the video signal, connect using a 75 Ω/ohms video signal cable cord. Using an improper cable can result in a drop in video quality.

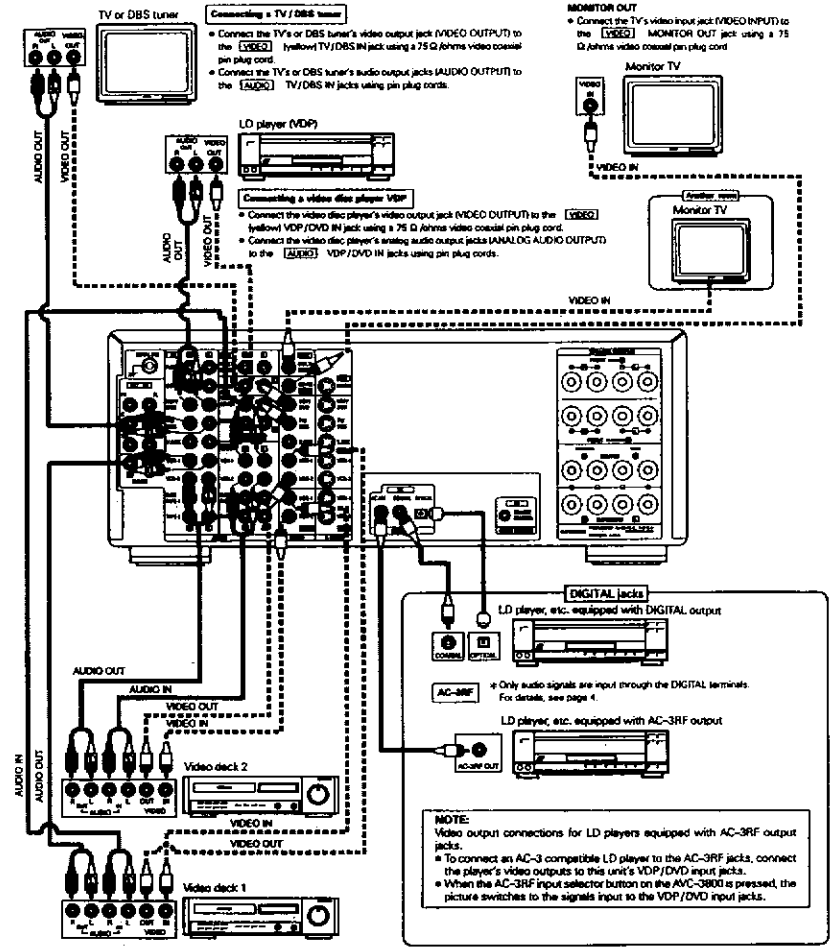

Connecting the video decks

- There are two sets of video deck (VCR) jacks, so two video decks can be connected for simultaneous recording or video copying.

Video input / output connections:

- Connect the video deck's video output jack (VIDEO OUT) to the VIDEO (yellow) VCR-1 IN jack, and the video deck's video input jack (VIDEO IN) to the VIDEO (yellow) VCR-1 OUT jack using 75 Ω /ohms video coaxial pin plug cords.

Connecting the audio output jacks

- Connect the video deck's audio output jacks (AUDIO OUT) to the AUDIO VCR-1 IN jacks, and the video deck's audio input jacks (AUDIO IN) to the AUDIO VCR-1 OUT jacks using pin plug cords.
- Connect the second video deck to the VCR-2 jacks in the same way.

5–3 Connecting the S–video jacks

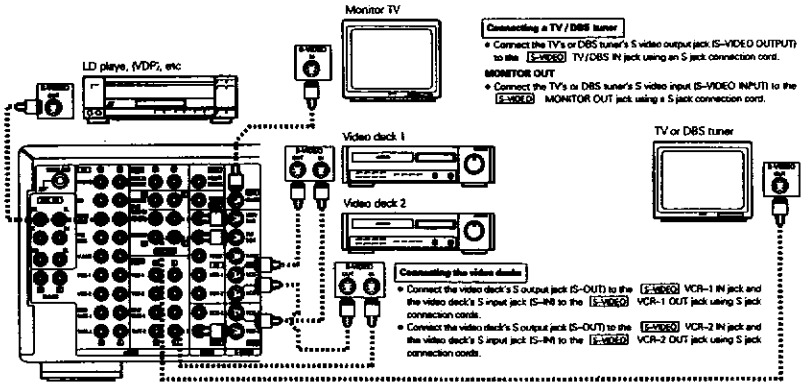

- **A note on the S input jacks**
  The input selectors for the S inputs and pin jack inputs work in conjunction with each other.
- **Precaution when using S–jacks**
  This unit's S–jacks (input and output) and video pin jacks (input and output) have independent circuit structures, so that video signals input from the S–jacks are only output from the S–jack outputs and video signals input from the pin jacks are only output from the pin jack outputs. When connecting this unit with equipment that is equipped with S–jacks, keep the above point in mind and make connections according to the equipment's instruction manuals.

5–4 Connecting the EXT. IN jack

The EXT. IN (EXTERNAL INPUTS) jack is used for the input of multi–channel audio, such as MPEG multi–channel.

1. Select the analog input using the ANALOG/DIGITAL button on the main unit.



2. Press the STEREO/EXT. IN button on the main unit to set the play mode to "EXT. IN".



The playback mode switches as follows each time the button is pressed:

→ STEREO → EXT. IN →

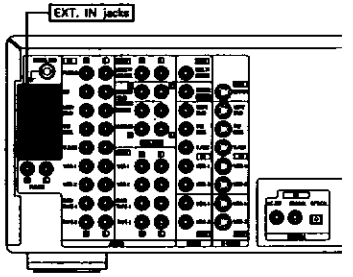

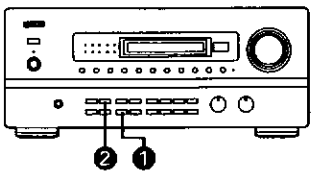

After setting, the input signals connected to the FL (Front Left), FR (Front Right), C (Center), SW (SubWoofer), SL (Surround Left) and SR (Surround Right) input jacks are output directly to the front (left and right), center, subwoofer and surround (left and right) speaker systems without passing through the surround circuit.

Surround input terminals

- If your component has only one surround output terminal, connect it to either the SL (surround left) or SR (surround right) terminal on the AVC–3800. The signals will automatically be divided between the left and right surround channels before being output.

NOTES:

- This jack cannot be operated in play modes other than the "EXT. IN" mode. Also, no signals are output from channels not connected to input jacks.
- The "EXT. IN" mode can be set for any function. To enjoy together with pictures, set this mode after selecting a function to which video signals are input.

5–5 Connecting the AC power cord and AC OUTLET(S)

■ ASIA MODEL ONLY

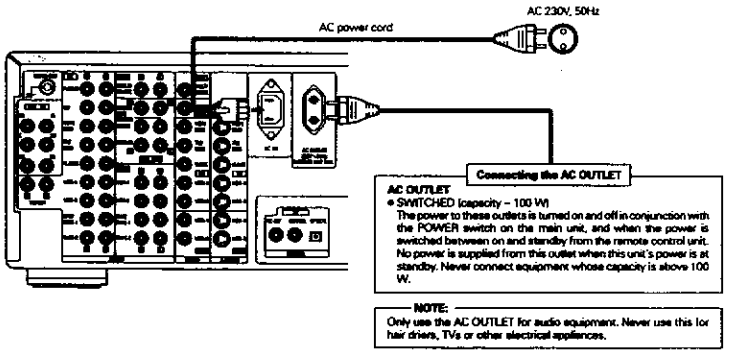

■ TAIWAN R.O.C. MODEL ONLY

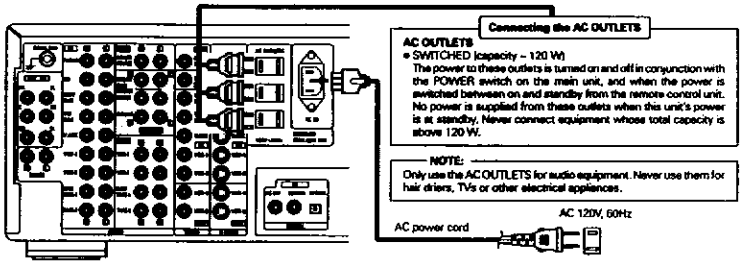

5–6 Speaker system connections

- Connect the speaker terminals with the speakers making sure that like polarities are matched (⊕ with ⊕ , ⊖ with ⊖). Mismatching of polarities will result in weak central sound, unclear orientation of the various instruments, and the sense of direction of the stereo being impaired.
- When making connections, take care that none of the individual conductors of the speaker cord come in contact with adjacent terminals, with other speaker cord conductors, or with the rear panel.

Speaker Impedance

- When speaker systems A and B are use separately, speakers with an impedance of from 8 to 16 Ω/ohms can be connected for use as front and center speakers.
- Be careful when using two pairs of front or center speakers (A + B) at the same time, since use of speakers with an impedance of less than 16 Ω/ohms will lead to damage.
- Speakers with an impedance of 8 to 16 Ω/ohms can be connected for use as surround speakers.
- The protection circuit may operate or damage may occur when speakers with an impedance outside of the above range are used.

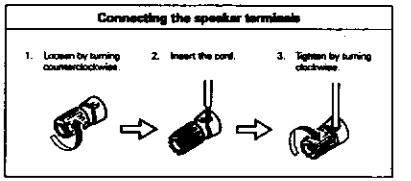

- **Precautions when connecting speakers**
  If a speaker is placed near a TV or video monitor, the colors on the screen may be disturbed by the speaker's magnetism. If this should happen, move the speaker away to a position where it does not have this effect.

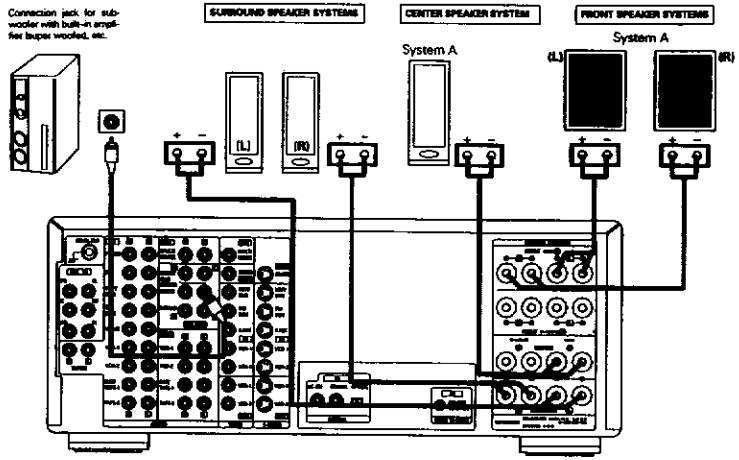

- About bi-wiring
  If your speakers have bi-wiring terminals, you can achieve higher quality sound by adding cords and using bi-wiring, as shown on the diagram below.
- By connecting speaker systems to both the speaker A and B terminals, you can play the same music source simultaneously in different rooms. (Use speakers with impedances of 16 Ω/ohms.)
- By adding an integrated amplifier, you can use the multi-source terminals to play the other music source simultaneously in different rooms. (See page 21, 22)

Bi-wiring procedure

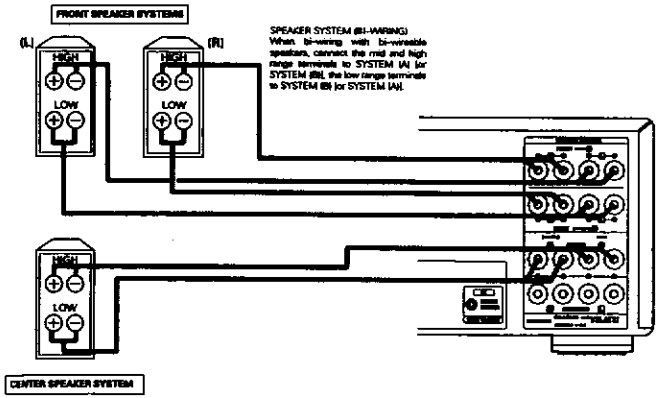

6 SYSTEM SETUP

After connections with other components have been made, make the various settings on the monitor using this unit's on screen display. These settings must be made in order to complete the AV system in your listening room.
Make the six settings described below.

① **Speaker Configuration**
② **Delay Time**
③ **Channel Level**
④ **Digital Inputs** (only when an AV component is connected to the digital input jacks)
⑤ **AC-3**
⑥ **On Screen Display**

NOTES:
- The output from the S MONITOR OUT terminal has priority for the on screen display. If you went to always output the on screen display signals to the video output, do not connect a cable to the S MONITOR OUT terminal.
- The on screen display is not displayed for the MULTI SOURCE OUT terminal.
- This model's on screen function is designed for high resolution monitor displays. Small characters may be difficult to read on small displays or low resolution TVs.

Use the following buttons on the remote control unit to make the settings:

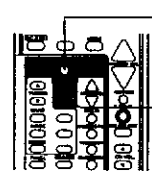

"ENTER" button
Press this to switch the display on the screen.
Also use this button to complete the setting on the screen.

"CURSOR" buttons
◀ and ▶ : Use these to move the cursors (◀ and ▶) to the left and right on the screen.
△ and ▽ : Use these to move the cursors (▲ and ▼) up and down on the screen.

6-1 Before setting up the system

1. Turn on the power and press the ENTER button.
   The "Menu" screen (screen 1) appears on the monitor.



2. Use the CURSOR buttons to specify "System Setup".



3. Press the ENTER button to switch the screen.



The "System Setup Menu" screen (screen 2) appears on the monitor.

```
        Menu
σSystem Setup
▼
 Surround Parameters

 Menu Off
```

(screen 1)

```
    System Setup Menu
σSpeaker Configuration
▼Delay Time
 Channel Level
 Digital Inputs
 AC-3
 On Screen Display

 Setup Menu Off
```

(screen 2)

6–2 Setting the speaker configuration

1. Use the CURSOR buttons to specify "Speaker Configuration" from the "System Setup Menu" screen (screen 2).



2. Press the ENTER button.



The "Speaker Configuration" screen (screen 3) appears on the monitor.

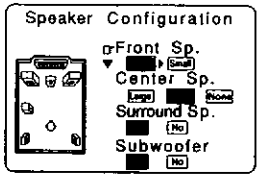

(screen 3)

3. Use the CURSOR buttons and select the different types of speakers connected and their size parameters.

To select the speakers:



To select the parameters:



The selected parameters are highlighted.

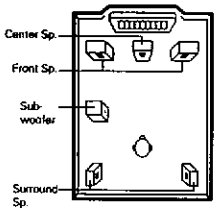

■ Parameters

Large ..... Select this when using speakers that can fully reproduce low sounds of below 80 Hz.
Small ..... Select this when using speakers that cannot reproduce low sounds of below 80 Hz with sufficient volume. When this setting is selected, low frequencies of below 80 Hz are assigned to the subwoofer.
None ..... Select this when no speakers are installed.
Yes/No ..... Select "Yes" when surround speakers and a subwoofer are installed, "No" when they are not installed.

4. After the above selections are completed, press the ENTER button again.
The "System Setup Menu" screen reappears.

6–3 Setting the delay time

Input the listening position and the distance of the different speakers.

1. Use the CURSOR buttons to specify "Delay Time" from the "System Setup Menu" screen (screen 4).



2. Press the ENTER button.



The "Delay Time" screen (screen 5) appears on the monitor.

3. Use the CURSOR buttons to specify the unit of distance.



NOTE: The settings are reset to their initial values when switching between meters and feet.

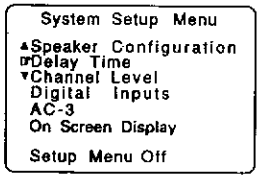

(screen 4)

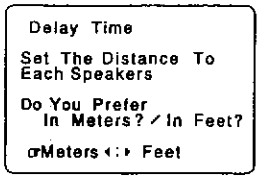

(screen 5)

4. Use the CURSOR buttons to input the listening position and the distance of the different speakers. (screen 6-A)

To select the speakers:



To select the distance:



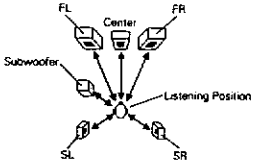

* Select "Default" to return to the initial settings (refer to page 14).

5. After the above selections are completed, press the ENTER button again.
The "System Setup Menu" screen reappears.
This procedure automatically sets the optimum surround delay time for the listening room.

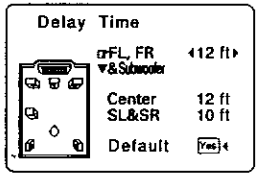

(screen 6-A)

* If you set an invalid distance, a CAUTION notice, such as screen 6-B will appear. In this case, please relocate the blinking speaker(s) so that its distance is no larger than the value shown in highlighted line. Then press the ENTER button again.

* Set in such a way that the distance to the center speaker is the same as or up to 5 feet (1.5 meters) shorter than the distance to the front left and front right speakers and the subwoofer.

* Set in such a way that the distance to the surround left and right speakers is the same as or up to 15 feet (4.5 meters) shorter than the distance to the front left and front right speakers and the subwoofer.

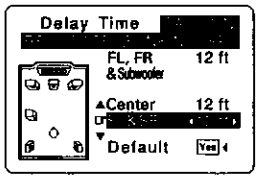

(screen 6-B)

6–4 Setting the channel level

Use test tones to adjust the volume of the different speakers.

1. Use the CURSOR buttons to specify "Channel Level" from the "System Setup Menu" screen. (screen 7)



2. Press the ENTER button.



The "Channel Level" screen (screen 8) appears on the monitor.

3. Use the CURSOR buttons to select "Test Tone Mode", then select "Auto" or "Manual".





4. Use the CURSOR buttons to select "Test Tone Start", then select "Yes".





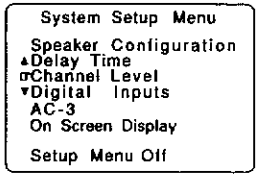

(screen 7)

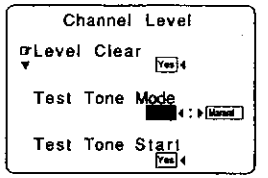

(screen 8)

5. a. If the "Auto" mode is selected:
Test tones are automatically emitted from the different speakers.
The test tones are emitted from the different speakers in the following order, at 4-second intervals the first time and second time around, 2-second intervals the third time around and on:

FL → C → FR → SR → SL → SW

Use the CURSOR buttons to adjust all the speakers to the same volume. (screen 9)



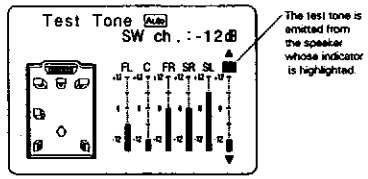

(screen 9)

b. If the "Manual" mode is selected:
Use the cursor buttons to select the speakers from which to emit the test tones and adjust the volume. (screen 10)

To adjust the volume:



To select the speaker:



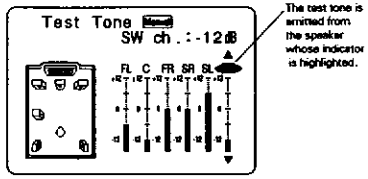

(screen 10)

The level of each channel should be adjusted to 75 dB (C-weighted, slow meter mode) on a sound level meter at the listening position.
If a sound level meter is not available adjust the channels by ear so the sound levels are the same. Because adjusting the subwoofer level test tone by ear is difficult, use a well known music selection and adjust for natural balance.
NOTE: When adjusting the level of an active subwoofer system, you may also need to adjust the subwoofer's own volume control.

6. After the above settings are completed, press the ENTER button again.
The "System Setup Menu" screen (screen 2) reappears.
To cancel the settings, select "Level Clear" and "Yes" on the "Channel Level" screen, then make the settings again.
NOTES:
- The output channel levels for all the surround modes are set to the same conditions when the channel level setting on the system setup menu is conducted.
- When the level clear operation is performed, all channel levels for all modes are set to 0 dB.

6-5 Digital inputs setup

Input the types of components connected to the digital input terminals.

1. Use the CURSOR buttons to specify "Digital Inputs" from the "System Setup Menu" screen. (screen 11)



2. Press the ENTER button.



The "Digital Inputs Setup" screen appears. (screen 12)

3. Use the cursor buttons to input the types of components connected to the digital input terminals.

To select the input terminal:



To select the type of component:



* Select "OFF" if nothing is connected.

Select "Default" to return to the initial settings (refer to page 14).

4. After the above settings are completed, press the ENTER button again.
The "System Setup Menu" screen reappears.

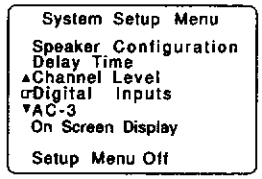

(screen 11)

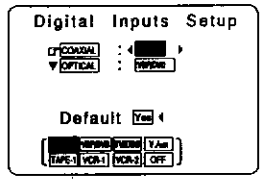

(screen 12)

NOTE:
PHONO, TUNER and TAPE-2 cannot be selected at "digital input terminal setting".

6-6 Dolby Digital AC-3

When playing Dolby Digital AC-3 sources, the input level is corrected automatically.
Set the dialog normalization function.

1. Use the CURSOR buttons to specify "AC-3" from the "System Setup Menu" screen. (Screen 13)



2. Press the ENTER button.



The "AC-3" screen appears. (Screen 14)

3. Use the CURSOR buttons to select "ON" or "OFF".



4. After the above settings are completed, press the ENTER button again.
The "System Setup Menu" screen reappears.

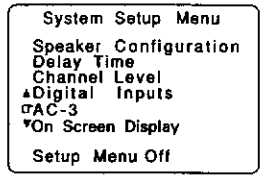

(screen 13)

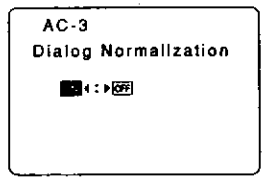

(screen 14)

When playing Dolby Digital AC-3 sources

NOTE: If dialog normalization is set to "OFF", it may not be possible to set the master volume to greater than −5 dB, depending on the number of speakers and the output channel level setting.

6-7 On Screen Display

"ON" or "OFF" can be selected for functions other than the ones on the menu screen.

1. Use the CURSOR buttons to specify "On Screen Display" from the "System Setup Menu" screen. (screen 15)



2. Press the ENTER button.



The "On Screen Display" screen (screen 16) appears on the monitor.

3. Use the CURSOR buttons to select "ON" or "OFF".



4. After the above settings are completed, press the ENTER button again.
The "System Setup Menu" screen reappears.

* This completes the system setup operations. Once the system is set up, there is no need to make the settings again unless other components or speakers are connected or the speaker layout is changed.

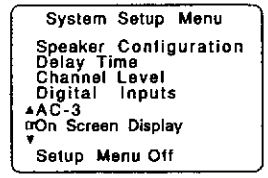

(screen 15)

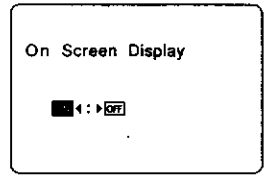

(screen 16)

6-8 Operation after completing system setup

1. Use the CURSOR buttons to specify "Setup Menu Off" from the "System Setup Menu" screen. (screen 17)



2. Press the ENTER button twice to turn off the on screen display.



System Setup Menu
Speaker Configuration
Delay Time
Channel Level
Digital Inputs
AC-3
On Screen Display
☞Setup Menu Off

(screen 17)

■ SYSTEM SETUP DEFAULT VALUE

① SPEAKER CONFIGURATION	Front SP		Center SP	Surround SP		Subwoofer
	Small		Small	Yes		Yes
② DELAY TIME	FL & FR		Center	SL & SR		Subwoofer
	12 ft. (3.6 m)		12 ft. (3.6 m)	10 ft. (3.0 m)		12 ft. (3.6 m)
③ CHANNEL LEVEL	FL	FR	C	SL	SR	SW
	0 dB	0 dB	0 dB	0 dB	0 dB	0 dB
④ DIGITAL INPUTS	COAXIAL: CD		OPTICAL: VDP/DVD			
⑤ AC-3	Dialog Normalization: ON					
⑥ ON SCREEN DISPLAY	ON					

Playback with the above setting is possible upon shipment from the factory and after initializing (refer to page 28).

7 REMOTE CONTROL UNIT

Following the procedure outlined below, insert the batteries before using the remote control unit.

■ Range of operation of the remote control unit

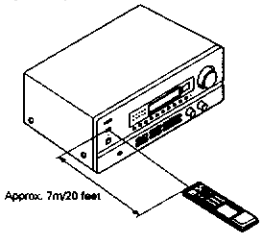

Point the remote control unit at the remote control sensor as shown on the diagram at the left.

NOTES:
- The remote control unit can be used from a straight distance of approximately 7 meters/20 feet, but this distance will shorten or operation will become difficult if there are obstacles between the remote control unit and the remote control sensor, if the remote control sensor is exposed to direct sunlight or other strong light, or if operated from an angle.
- Neon signs or other devices emitting pulse-type noise nearby may result in malfunction, so keep the set as far away from such devices as possible.

■ Inserting the batteries

1. Open the bottom cover of the remote control unit and remove the battery cover.

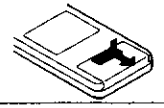

2. Insert the two R6P/AA batteries, matching the ⊕ and ⊖ marks on the batteries with those in the case. Close the bottom cover until it clicks shut.

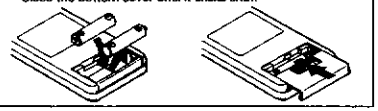

NOTES:
- Use only AA, R6P, UM-3 batteries for replacement.
- Be sure the polarities are correct. (See the illustration inside the battery compartment.)
- Remove the batteries if the remote control transmitter will not be used for an extended period of time.
- If batteries leak, dispose of them immediately. Avoid touching the leaked material or letting it come in contact with clothing, etc. Clean the battery compartment thoroughly before installing new batteries.
- Have replacement batteries on hand so that the old batteries can be replaced as quickly as possible when the time comes.
- The codes that have been learned may be lost if removed batteries are not replaced within about 5 minutes.

7-1 System code buttons

DENON remote-controllable audio components can be controlled using this unit's remote control unit. Note that some components, however, cannot be operated with this remote control unit.

1. Set to slide switch to "AUDIO" ("AVR/AVC").



2. Set the slide switch to the position for the component to be operated (CD, DECK or DAT). The tuner can be oprated in any position.



3. Use the buttons shown below to operate the audio component. For details, refer to the respective component's manual.

a. For CD players and DATs



◀◀, ▶▶ : Manual search (reverse and forward)
■ : Stop
▶ : Play
◀◀/▶▶| : Auto search
▮ : Pause
DISC : Disc selection
SKIP+ (CD changer only)

b. For tape decks (DECK)



◀◀ : Reverse
▶▶ : Forward
■ : Stop
▶ : Forward play
▮ : Pause
A/B : A/B deck selection
◀ : Reverse play

c. For tuner

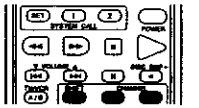

SHIFT : Preset channel range selection
CHANNEL : Preset channel up/down
+ −

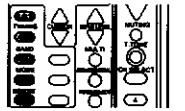

TUNING : Tuning up/down
▲, ▼
BAND : AM/FM reception band selection
MODE : AUTO/MONO selection
MEMORY : Preset memory

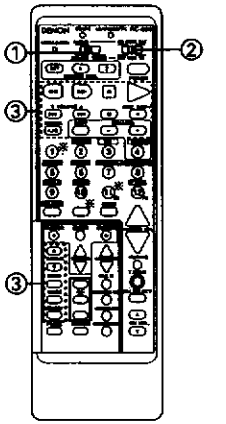

※These buttons does not function. (Some buttons can be used by using the preset memory or the learning function.)

7-2 Preset memory

DENON and other makes of components can be operated by setting the preset memory for your make of video component. **Operation is not possible for some models, however. In this case use the learning function (see page 17, 18) to store the remote control signals.**
For instructions on clearing the presettings stored in the preset memory, see page 18.

1. Set the slide switch to "VIDEO".



2. Set the slide switch to the component to be registered (VDP, VCR or TV).



(Keep the POWER button pressed in when performing steps 3 and 4.)

3. Holding in the POWER button, press the button for the corresponding manufacturer in block A. (Refer to Table 7-2.)

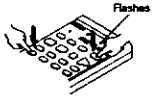

The LEARNED/TX LED flashes.

4. Next, while holding in the POWER button, press the button for the code in block B. (Refer to Table 7-2.) The operation is completed when the LEARNED/TX LED lights.

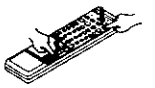

5. To continue registering other components, repeat steps 2 to 4.

This remote control unit can be used to operate components of other manufacturers without using the learning function by registering the manufacturer of the component as shown on Table 7-2 (refer to page 16).

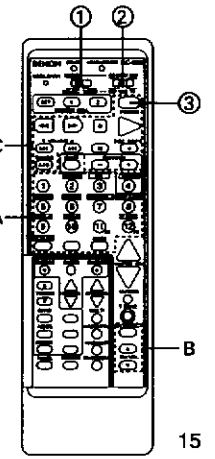

Table 7-2: Combinations of Personal System Codes for Different Manufacturers

"VDP"

A \ B	(CH SELECT)	(CH VOL.)	(CH VOL.)
①	DENON A	DENON B	DENON C
② (PHONO)	—	—	—
③ (CD)	MITSUBISHI	—	—
④ (TUNER)	PANASONIC	—	—
⑤ (VDP/DVD)	—	—	—
⑥ (TV/DBS)	SONY A	SONY B	SONY C
⑦ (DAT/TAPE-1)	PIONEER	—	—
⑧ (TAPE-2/MON)	—	—	—
⑨ (VCR-1)	SANYO	—	—
⑩ (VCR-2)	SHARP	—	—
⑪ /0 (V.AUX)	—	—	—
⑫ /E (V.AUX)	PHILIPS	—	—
(AC-3RF)	RCA	—	—
	—	—	—
(MODE)	MAGNAVOX	—	—

"VCR"

A \ B	(CH SELECT)	(CH VOL.)	(CH VOL.)
①	—	—	—
② (PHONO)	HITACHI A	HITACHI B	HITACHI C
③ (CD)	MITSUBISHI A	MITSUBISHI B	MITSUBISHI C
④ (TUNER)	PANASONIC A	PANASONIC B	—
⑤ (VDP/DVD)	JVC (VICTORIA	JVC (VICTOR)B	—
⑥ (TV/DBS)	SONY A	SONY B	SONY C
⑦ (DAT/TAPE-1)	PIONEER	—	—
⑧ (TAPE-2/MON)	TOSHIBA A	TOSHIBA B	—
⑨ (VCR-1)	SANYO A	SANYO B	—
⑩ (VCR-2)	SHARP A	SHARP B	—
⑪ /0 (V.AUX)	NEC A	NEC B	NEC C
⑫ /E (V.AUX)	PHILIPS A	PHILIPS B	PHILIPS C
(AC-3RF)	RCA A	RCA B	—
	GENERAL ELECTRIC A	GENERAL ELECTRIC B	—
(MODE)	MAGNAVOX A	MAGNAVOX B	MAGNAVOX C

"TV"

A \ B	(CH SELECT)	(CH VOL.)	(CH VOL.)
①	DENON	—	—
② (PHONO)	HITACHI A	HITACHI B	—
③ (CD)	MITSUBISHI A	MITSUBISHI B	MITSUBISHI C
④ (TUNER)	PANASONIC	—	—
⑤ (VDP/DVD)	JVC (VICTOR)	—	—
⑥ (TV/DBS)	SONY A	—	—
⑦ (DAT/TAPE-1)	PIONEER	—	—
⑧ (TAPE-2/MON)	TOSHIBA	—	—
⑨ (VCR-1)	SANYO A	SANYO B	—
⑩ (VCR-2)	SHARP	—	—
⑪ /0 (V.AUX)	NEC A	NEC B	NEC C
⑫ /E (V.AUX)	PHILIPS A	PHILIPS B	PHILIPS C
(AC-3RF)	RCA A	RCA B	—
	GENERAL ELECTRIC A	GENERAL ELECTRIC B	—
(MODE)	MAGNAVOX A	MAGNAVOX B	MAGNAVOX C

NOTES:
- The signals for the pressed buttons are emitted while setting the preset memory. To avoid accidental operation, cover the remote control unit's transmitting window while setting the preset memory.
- Some models and years of manufacture of components of the manufacturers listed on Table 7-2 cannot be used.

7-3 Operation after components are registered

1. Set the slide switch to "VIDEO".



2. Set the slide switch to the component to be registered (VDP, VCR or TV).



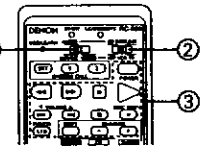

3. Use the buttons shown below to operate the video component. (Some models cannot be used.)
For details, refer to the respective component's manual.

a. VDP

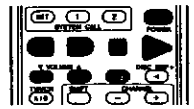

POWER : Power on/off
◀◀, ▶▶ : Manual search (reverse and forward)
■ : Stop
▶ : Play
I◀◀ , ▶▶I : Auto search
❚❚ : Pause

b. VCR



POWER : Power on/off
◀◀, ▶▶ : Manual search (reverse and forward)
■ : Stop
▶ : Play
❚❚ : Pause
CHANNEL : Channel selection
+, –

c. TV



POWER : Power on/off
VOLUME : Volume up/down
▲, ▼
TV/VCR : TV/video selection
CHANNEL : Channel selection
+, –

7-4 Remote control unit learning function

If your AV components are not DENON products or if operation is not possible with the preset memory settings, the components' remote control signals can be "learned" to enable remote control operation.
The buttons that can be "learned" are the CD, DAT and DECK system buttons (see page 16) and the VDP, VCR and TV system buttons (see page 17). (For the TV only, the A block buttons can also be "learned".)

1. Press the USE/LEARN selector button with the tip of a pen etc., to set the learn mode. Both the START and LEARNED/TX indicators flash.

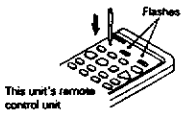

2. Set the program switch to the side to be "learned". Set to the AUDIO side for the CD, tape deck or DAT position, to the VIDEO side for the VDP, VCR or TV position.



3. Set the program switch to the position to be "learned".



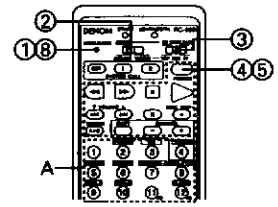

4. Set the remote control units so they are facing each other, then press the button to be "learned" on this unit's remote control unit.

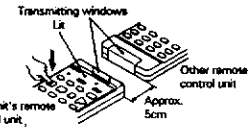

The indicator stops flashing and the START LED lights.
The learnable buttons are the buttons which can be operated with the DENON system codes for the CD player, DAT and tape deck, the buttons which can be operated with the preset memory for the VCR, VDP and TV. For the TV only, however, the buttons in the section indicated "A" on the diagram above can also be "learned". Use these to "learn" TV channels.

NOTE: Use button ⑪/0 as the 0 number button, button ⑫/E as the enter button.

Continued on page 18.

5. Check that the START LED is lit, then press the button to be "learned" on the other remote control unit.

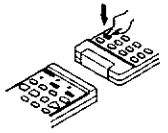

6. Once the START LED turns off and the LEARNED/TX LED lights, release the button on the other remote control unit.

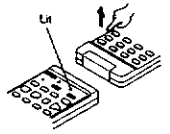

The two LEDs start flashing again.

7. To "learn" other buttons, repeat steps 2 to 6.

8. Once the learning operation is completed, press the USE/LEARN selector button again.
The two LEDs stop flashing and the learning mode is cancelled.

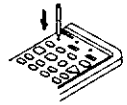

Check that the stored codes work properly.

NOTES:

- Up to 26 codes can be "learned", but this number may be lower if the codes are long.
- If a non-learnable button is pressed or two or more buttons are pressed at once, the two LEDs will once again light when the button(s) is released.
- If the codes could not be stored, the LEARNED/TX LED does not light after the START LED turns off. For limited number of models, codes cannot be stored in RC-820.
- If the two LEDs start flashing rapidly after the START LED lights, this means that the memory is already full, and the code you have just attempted to store was not stored.
To "learn" that code, first perform the resetting operation.

7-5 Clearing "learned" remote control signals and the preset memory settings

1. Press the USE/LEARN selector button with the tip of a pen, etc., to set the learn mode.

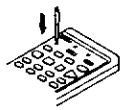

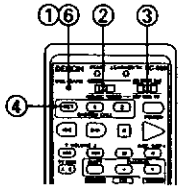

2. To clear "learned" remote control signals, set the slide switch to the position at which the signals were "learned". To clear the preset memory settings, set the slide switch to "VIDEO".



3. Set the slide switch to the position at which the signals were "learned" or at which the preset memory settings were set.



4. Press the SYSTEM CALL SET button, and hold it in for at least four seconds.



5. When both the START and LEARNED / TX LEDs light simultaneously, all the stored codes are cleared.



6. Press the USE/LEARN selector button.

8 OPERATIONS

8-1 Preparations for playback

1. Check that all connections are proper.
2. Set to the center position.



3. Set the remote control unit's slide switch to the AUDIO position. (only when operating with the remote control unit)



4. Turn on the power.
Press the POWER switch (button).



- ON/STANDBY
The power turns on and "ON/STANDBY" indicator is lit.
Several seconds are required from the time the power switch is set to the "ON" position until sound is output. This is due to the built-in muting circuit that prevents noise when the power switch is turned on and off.
Set the POWER switch to this position to turn the power on and off from the included remote control unit (RC-820).

- OFF
The power turns off and "ON/STANDBY" indicator is off.
In this position, the power cannot be turned on and off from the remote control unit.

8-2 Playing the analog program source

1. Press the button for the program source to be played.
EX: CD

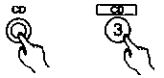

2. Select the ANALOG input.



Check that the "DIGITAL" indicator is off.
If it is lit, press the button to switch the mode.

3. Select the STEREO or EXT. IN mode.



The play mode switches in the following order each time the STEREO/EXT.IN button on the main unit is pressed:

STEREO → EXT. IN →

* EXT. IN mode
This mode is for playing the multi-channel audio signals of an MPEG multi-channel decoder, etc., connected to the main unit's EXT.IN jacks. (refer to page 6)

4. Start playback on the selected component.
For operating instructions, refer to the various components' manuals.

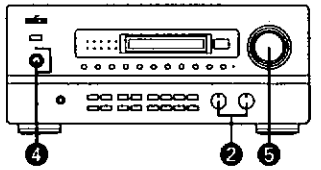

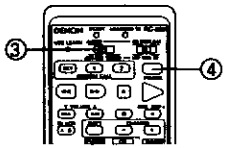

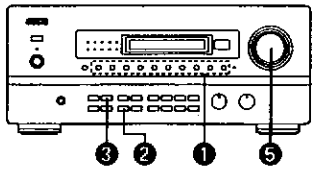

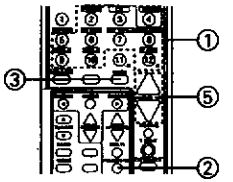

5. Adjust the MASTER VOLUME control.



Volume level (-60~0~18) is displayed.

8–3 Playing the digital program source

1. Press the button for the program source to be played that is connected to the digital input jacks.
   EX: CD



2. Select the DIGITAL input.

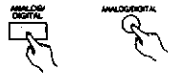

3. Check that the "DIGITAL" indicator is lit red.

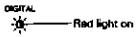

When digital signals are input properly, the DIGITAL indicator switches from red to green.

* If the indicator is not lit green, check that the system setup's input setting (refer to page 12) and the connections are proper, that the component's power is turned on, etc.

4. Start playback on the selected component.
   For operating instructions, refer to the various components' manuals.

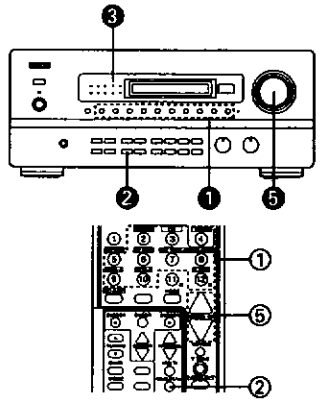

5. Adjust the MASTER VOLUME control.



NOTE: If a CD-ROM is played, the "DIGITAL" indicator is lit green but no sound is heard.

8–4 Adjusting the TONE control

1. Adjust the BASS and TREBLE.

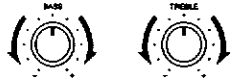

Turn the control clockwise to increase the bass or treble, counterclockwise to decrease it.

2. Select the DIRECT mode if there is no need to adjust the sound.

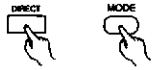

8–5 Simulcast playback

Use this switch to monitor a video source other than the audio source.

1. Press the VIDEO SELECT button repeatedly until the desired source appears on the display.

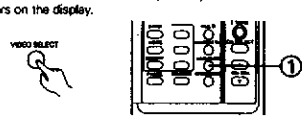

* Cancelling simulcast playback.
  • Select "SOURCE" using the video select button.
  • Switch the program source to the component connected to the video or AC-3RF input.

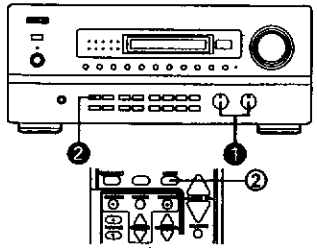

8–6 Using the muting function

Use this to turn off the audio output temporarily.

1. Press the MUTING button.

* Cancelling MUTING mode.
  Press the MUTING button again.

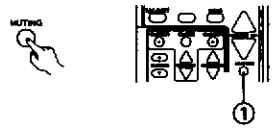

8–7 Listen with headphones

Connect the headphones to the PHONES jack.
The pre-out output (including the speaker output) is automatically turned off when headphones are connected.

NOTE:
To prevent hearing loss, do not raise the volume level excessively when using headphones.

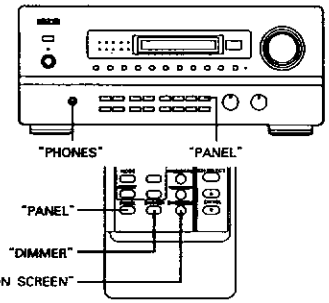

8–8 On screen display

Each time an operation is performed, a description of that operation appears on the display connected to the unit's VIDEO MONITOR OUT terminal. Also, the unit's operating status can be checked during playback by pressing the remote control unit's ON SCREEN button.



Such information as the position of the input selector and the surround parameter settings is output in sequence.

8–9 Front panel display

Descriptions of the unit's operations are also displayed on the front panel display. In addition, the display can be switched to check the unit's operating status while playing a source by pressing the PANEL button.

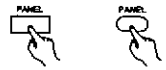

8–10 Using the dimmer function.

Use this to change the brightness of the display. The display brightness changes in four steps (bright, medium, dim and off) by pressing the remote control unit's DIMMER button repeatedly.



8–11 Multi-source REC OUT recording / playback

While listening to or watching the currently playing program source, you can record another program source (REC OUT mode), or by connecting the input jacks of an amplifier, etc., located away from the AVC-3800 (for example in another room) to the MULTI SOURCE output jacks, you can output the program source to the other location (room) (MULTI mode).

■ Recording a source other than the one currently playing (REC OUT mode)

1. Press the REC/MULTI MODE button until "REC OUT SOURCE" appears on the display.



2. Select the source to be output to the recording output terminal.
   Press the REC/MULTI SOURCE button repeatedly until the desired source appears on the display



The indicator of the selected program source lights on the display at this time.

3. Set to the audio or video recording mode.
   For operating instructions, refer to the manuals of the components to be used for audio or video recording.

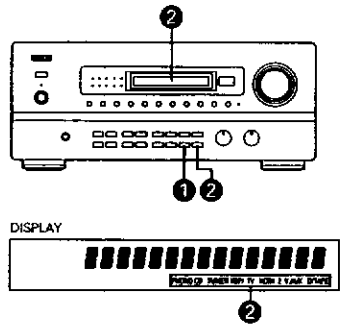

* REC OUT select is not possible for TAPE-2 monitor REC OUT.
* The signals of the source expect the digital input selected with the REC OUT mode are also output from the MULTI SOURCE AUDIO/VIDEO OUT terminals.
* Digital input signals cannot be recorded. To record, connect to the analog input terminals.
* To cancel the REC OUT mode.
  Press the REC/MULTI MODE button or the REC/MULTI SOURCE button repeatedly until "SOURCE" appears on the display.

■ Playing a source other than the one currently playing in a different room (MULTI mode)

1. Press the REC/MULTI MODE button repeatedly until "M-SOURCE SOURCE" appears on the display.



2. Select the source to be output to the MULTI SOURCE output terminal. Press the REC/MULTI SOURCE button repeatedly until the desired source appears open the display.
   The indicator of the selected program source lights on the display at this time.
   The "MULTI" indicator lights on the display at this time.

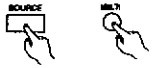

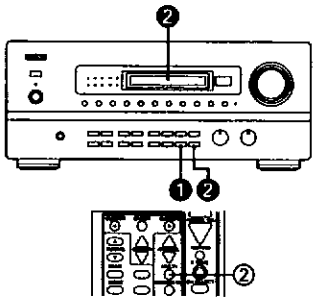

DISPLAY



* When the MULTI button on the remote control unit is pressed, the source to be output from the MULTI SOURCE terminals can be selected.
  (This cannot be selected when the main unit is in the REC OUT mode.)
* The digital signals are not output from the MULTI SOURCE AUDIO/VIDEO OUT terminals.
* To cancel the MULTI mode
  Press the REC/MULTI MODE button or the MULTI button on the remote control unit repeatedly until "SOURCE" appears on the display.

NOTE:
The signals of the source selected in the MULTI mode are also output from the DAT/TAPE-1 and VCR recording output terminals.

Multi-source and multi-zone playback

By connecting another pre-main amplifier, etc., to the MULTI SOURCE OUT jacks, you can listen to a source other than the one in the main room in other room. To connect the video signal, use a 75 Ω/ohms cable designed specifically for video signals. Using an improper cable can result in a drop in sound quality.

8-12 System call (remote control unit)

This function allows you to preset frequently used operation patterns in the remote control unit then automatically send a series of up to ten remote control codes with a single button.

Presetting

1. Press the SET button.



2. Press the buttons for the codes to be sent, changing the position of the slide switch as necessary. (Up to ten buttons can be set.)
   Buttons which have been "learned" and buttons which have been preset can also be selected.

3. Press the SYSTEM CALL button ("1" or "2") at which you want to store the codes.
   The setting is now stored.

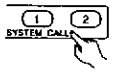

Recalling

4. Press the SYSTEM CALL button ("1" or "2") at which the desired codes have been stored.
   The series of codes is now sent.

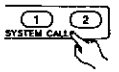

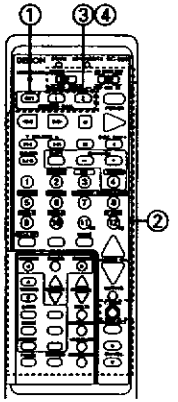

9 USING THE SURROUND FUNCTION

9-1 Dolby Surround

This unit is equipped with digital signal processing sections for decoding and reproducing movie soundtracks the same way as in movie theaters.

1. **DOLBY SURROUND PRO LOGIC**
   When using conventional video tapes, laser discs, TV programs or CDs with the DOLBY SURROUND mark, Dolby Pro Logic provides extremely natural sound movement and positioning, immersing you in the on screen action. Pro Logic uses a directional emphasis circuit to decode four output channels (front left and right, center and surround) from the two audio channels provided on the software.

2. **DOLBY DIGITAL AC-3**
   When you connect an LD player with an AC-3 RF output and play laser discs with the DOLBY SURROUND DIGITAL mark, you can experience improved sound spatiality, positioning, and impact compared with Pro Logic. This is because Dolby Digital AC-3 delivers up to 5 totally discrete, full frequency audio channels (front left and right, center, and surround left and right), plus a bass-only effects channel. Since the signal is digital from the input of the program source until to the output of this unit, a higher quality and clarity of surround sound results.
   Dolby Digital AC-3 (Auto Coding 3) is a system developed by Dolby Laboratories that transmits 5.1 channels of digital signals. The surround system developed for movie theaters using this system is called "Dolby SR-D (Surround Digital)". Whereas the conventional Dolby Pro Logic Surround is an analog matrix system, Dolby SR-D is a digital discrete system in which the different channels are completely independent. This makes it possible to achieve a realistic sound field with a "three-dimensional" feel, giving the sound a sense of distance, movement and relative position, and creating a surprisingly real and powerful sense of presence when playing movie software in AV rooms.
   There are "5.1 ch" playback channels: three front channels (front left, center and front right), two surround channels (surround left and surround right), plus "0.1 channel" called LFE (Low Frequency Effect) for low bass effect sounds of 120 Hz or less. The signals are recorded on the software in fully discrete fashion, eliminating crosstalk between channels and making it possible to control the sound field in the listening/viewing space with greater precision.
   In addition, the frequency range of the five channels extends up to 20 kHz, (the same as CDs,) resulting in clear sound with greater richness of expression. Also, Dolby Digital AC-3 will be used on DVDs, the next generation AV medium.

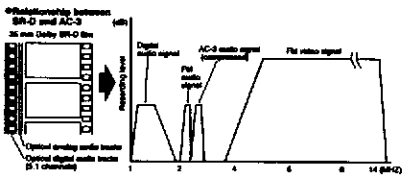

● **Dolby Digital AC-3 and Pro Logic**

Home surround methods	Dolby Digital AC-3	Dolby Pro Logic
No. recording channels (maximum)	5.1 ch	2 ch
No. playback channels	5.1 ch	4 ch
Playback channels	L, R, C, SL, SR and SW	L, R, C, S (SW recommended)
Audio processing	Digital discrete processing, AC-3 encoding / decoding	Analog matrix processing, Dolby Surround
Upper reproduction limit of surround channel	20 kHz	7 kHz

Manufactured under license from Dolby Laboratories Licensing Corporation.
"Dolby," "AC-3", "Pro Logic" and the double-D symbol are trademarks of Dolby Laboratories Licensing Corporation. Copyright 1992 Dolby Laboratories, Inc. All rights reserved.

9-2 Before playing with the surround function

Before playing with the surround function, be sure to use the test tones to adjust the playback level from the different speakers. This adjustment can be performed with the system setup (see page 11, 12) or from the remote control unit, as described below.
Adjusting with the remote control unit using the test tones is only possible in the "Auto" mode and only effective in the Dolby Surround mode. The adjusted levels are automatically stored in the memory.

1. Press the T.TONE button.



2. Test tones are output from the different speakers. Use the channel volume adjust buttons to adjust so that the volume of the test tones is the same for all the speakers.



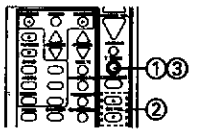

3. After completing the adjustment, press the T.TONE button again.



After adjusting using the test tones, adjust the channel levels either according to the playback sources or to suit your tastes, as described below.

1. Press the channel select button to select the speaker to be adjusted.



2. Adjust the level of the selected speaker.



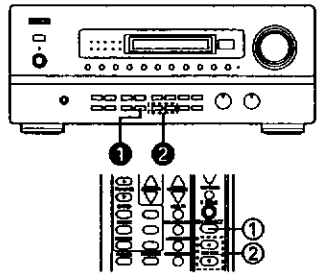

9-3 Using the Dolby Surround Pro Logic mode

1. Set the DOLBY SURROUND mode.

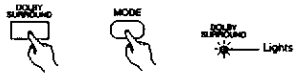

* Conventional program sources will automatically be decoded with Dolby Pro Logic, while Dolby Digital AC-3 program sources will be decoded with Dolby Digital AC-3.

2. If necessary, adjust the input level when analog sources are used to obtain maximum dynamic range without overload.



Set so that the "OVER LOAD" indicator does not light at places where the volume is high.

* For digital input sources, there is no need to adjust the input level. (These buttons will not operate and the indicator will not light.)
* The current input source, input level, etc., can be checked on the on screen display. (screen 18)

3. Play a program source with the [DOLBY DIGITAL] or [PRO LOGIC] mark. For operating instructions, refer to the various components' manuals.

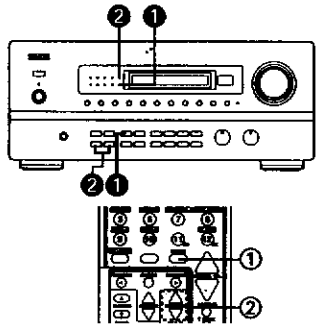

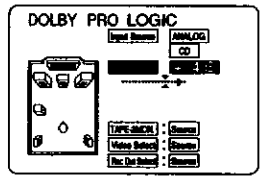

(screen 18)

9-4 Using the Dolby Digital AC-3 mode

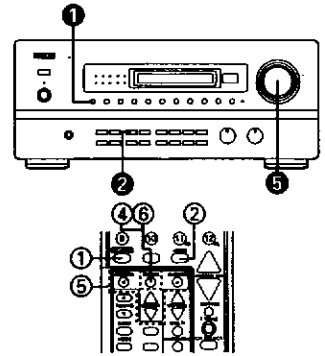

1. Switch the audio input to AC-3RF input (a) or digital input (b). The VDP picture is linked to the AC-3RF signals.

a. AC-3RF (VDP AUTO or VDP AC-3RF) input
Select the AC-3 RF input.



When the button is pressed, the video input automatically switches to VDP/DVD. The input mode switches as follows each time the button is pressed:

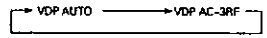

This input mode makes it possible to play the Dolby Digital AC-3 audio, digital audio or analog audio signals recorded on the source by switching between the priority and fixed modes for the AC-3RF, digital (optical/coaxial) or analog input jacks with the VDP/DVD function.

- VDP AUTO ..... When AC-3RFsignals and digital and analog signals are input from the LD, the signals are automatically selected with the following priority: AC-3RF → digital or analog.
- VDP AC-3 RF ..... AC-3RF fixed input

NOTES:
- In the "VDP AUTO" mode, when an LD with the Dolby Digital AC-3 audio is detected, the decoder switches automatically and the Dolby Digital AC-3 audio is played. Also, in any mode other than normal LD player playback, no Dolby Digital AC-3 signals are detected, so the mode automatically switches to PCM or analog audio.
- In the "VDP AUTO" mode, when the mode changes from pause, chapter search, etc., to playback during playback of the Dolby Digital AC-3 audio on an LD, the PCM or analog sound may be output momentarily before the mode is switched to the Dolby Digital AC-3 audio mode. If this happens, the sound will not be interrupted if you switch to the "VDP AC-3RF" (AC-3RF fixed input) mode.
- The AC-3RF input mode setting is reset to "VDP AUTO" when the power is turned off using the power switch on the remote control unit or on the main unit.

b. Digital input
Select the digital input. Refer to page 20, 8-3, 1, 2 and 3.

2. Set the DOLBY SURROUND mode.



3. Play a program source with the [DOLBY DIGITAL] mark or a program source with Dolby Digital AC-3 formats.
The indicators below showing the signals included in the software light. (The number of channels differs according to the software.)

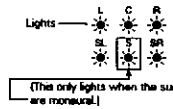

L: Front Left ch
C: Center ch
R: Front Right ch
SL: Surround Left ch
S: Mono Surround ch
SR: Surround Right ch

Also, the following indicator lights if the software contains Low Frequency Effect sounds:



4-1. Adjust the sound for the program source using the on screen display.

4-2. Press the ENTER button.



4-3. Use the CURSOR buttons to specify "Surround Parameters". (screen 19)



4-4. Press the ENTER button to switch the screen.



5. Use the CURSOR buttons to move the cursor on the screen and set the parameters. (screen 20)



6. After the above settings are completed, press the ENTER button.

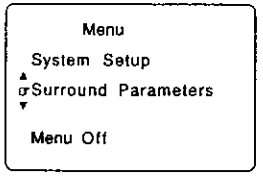

(screen 19)

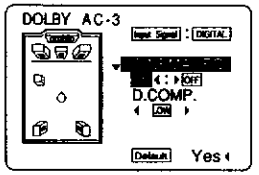

(screen 20)

NOTES:

- With the this model, **Dolby Digital AC-3 encoded signals can only be played in the Dolby Pro Logic, Dolby Digital AC-3, DIRECT and STEREO modes.** Other surround mode buttons will not function during the Dolby Digital AC-3 signal playback.
- When the mode is switched to Dolby Digital AC-3 encoded signals while playing PCM digital signals or analog signals in the **MONO, 5CH STEREO, SUPER STADIUM, ROCK ARENA, JAZZ CLUB, CLASSIC CONCERT** or **MATRIX** surround mode, the mode is **forcibly switched to the DOLBY SURROUND mode.**

■ Surround parameters

CINEMA EQ. ..... Use "CINEMA equalizer" if dialogue audio track sound scratchy when playing movie software. (The higher frequency component is lowered.) (Only effective in the Dolby Pro Logic, Dolby Digital AC-3 modes.)
This parameter can also be turned on and off with the CINEMA button on the main unit.

D. COMP. ..... "Dynamic Range Compression" compresses the dynamic range. This is only effective for Dolby Digital AC-3 program sources. — There are four parameters: "OFF" ↔ "LOW" ↔ "MID" ↔ "HIGH"

NOTE: When "Default" is selected and the ◀ cursor button is pressed, "CINEMA EQ" and "D.COMP" are automatically set to "OFF".

9-5 DSP surround simulation

This unit is equipped with a high precision D.S.P. (Digital Signal Processor) for processing signals digitally to simulate sound fields. Select the surround mode according to the playback source and adjust the parameters according to the conditions in the listening room to achieve realistic venue ambience.
These surround modes can be used with program sources not recorded in Dolby Surround.

Types of surround modes and their characteristics

1	MONO	Use this when playing monaural signals, for example AM broadcasts or news programs.
2	5CH STEREO	The signals of the left and right channels are distributed to the different speakers to achieve a stereo sound from all directions at the listening position.
3	SUPER STADIUM	Use this to enjoy program sources such as football or baseball games with the atmosphere of a stadium.
4	ROCK ARENA	The powerful reverberations of this mode produce a sound field which recreates the excitement of live concerts. This mode is effective for rock, popular music, etc.
5	JAZZ CLUB	This mode creates the sound field of a live house with a low ceiling and hard wall reverberations. The result is that the artist seems to be performing right before your eyes.
6	CLASSIC CONCERT	This mode creates a sound field simulating a large concert hall, rich in reverberation. This mode is characterized by composed acoustics, and is perfect for playing classical music, etc.
7	MATRIX	Use this to enjoy stereo music sources with rich reverberations.

* Depending on the program source being played, the effect may not be very noticeable. In this case, try other surround modes, without worrying about their names, to create a sound field suited to your tastes.

Personal Memory Plus function .... for EASY USE

This unit automatically stores the surround mode adding selected effects for all input sources. The corresponding surround mode is recalled automatically each time an input source is selected.

9-6 Using the DSP surround simulation

1. Select the surround mode according to the input source.

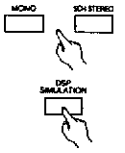

The surround mode switches in the following order each time the DSP SIMULATION button is pressed:

→SUPER STADIUM → ROCK ARENA → JAZZ CLUB
MATRIX ← CLASSIC CONCERT ←

2. Press the ENTER button and call out the "Menu" screen from the on screen display.



3. Use the CURSOR buttons to specify "Surround Parameters". (screen 21)



4. Press the ENTER button.
The screen switches.

5. Move the cursor on the screen and make the various settings. (screen 22)

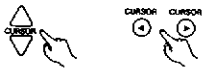

6. After the above settings are completed, press the ENTER button.

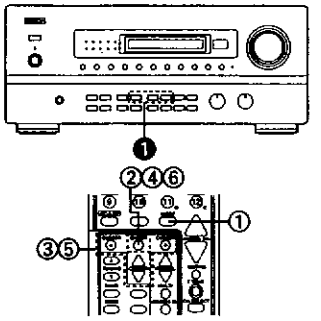

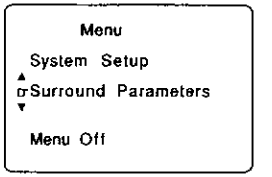

(screen 21)

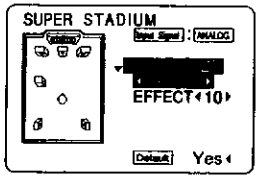

(screen 22)

■ Surround modes and parameters

ROOM SIZE ..... "ROOM SIZE" refers to the size of the sound field. — There are five parameters: "small" ↔ "med.s." ↔ "medium" ↔ "med.l." ↔ "large"

EFFECT LEVEL ..... "EFFECT LEVEL" refers to the strength of the effect sounds. If the sound becomes distorted, lower the level. Parameter "1" ~ "15"

DELAY TIME ..... This can be set to between 0 and 360 msec for the MATRIX mode.

NOTE: When "Default" is selected and the ◀ cursor button is pressed, "CINEMA EQ" and "D.COMP" are automatically set to "OFF", "ROOM SIZE" is set to "medium", "EFFECT LEVEL" is set to "10" and "DELAY TIME" is set to "30 ms".

NOTES:

- With the this model, **Dolby Digital AC-3 encoded signals can only be played in the Dolby Pro Logic, Dolby Digital AC-3, DIRECT and STEREO modes.** Other surround mode buttons will not function during the Dolby Digital AC-3 signal playback.
- When the mode is switched to Dolby Digital AC-3 encoded signals while playing PCM digital signals or analog signals in the **MONO, 5CH STEREO, SUPER STADIUM, ROCK ARENA, JAZZ CLUB, CLASSIC CONCERT** or **MATRIX** surround mode, the mode is **forcibly switched to the DOLBY SURROUND mode.**

■ Surround modes and parameters

MODE	OUTPUT CHANNEL				PARAMETER SOURCE (Default)					When playing AC-3 data
	FRONT L / R	CENTER	SURROUND	SUBWOOFER	CINEMA EQ	ROOM SIZE	EFFECT LEVEL	DELAY TIME	D. COMP	
DIRECT	○	×	×	● *1	×	×	×	×	(AC-3 SOURCE ONLY) (OFF)	○
STEREO	○	×	×	●	×	×	×	×	(AC-3 SOURCE ONLY) (OFF)	○
EXTERNAL INPUTS	○	●	●	●	×	×	×	×	×	×
DOLBY PRO LOGIC	○	●	●	●	(OFF)	×	×	×	(AC-3 SOURCE ONLY) (OFF)	○ *2
DOLBY AC-3	○	●	●	●	(OFF)	×	×	×	(OFF)	○ *1
MONO	△	△	×	●	×	×	×	×	×	×
5CH STEREO	○	●	●	●	×	×	×	×	×	×
SUPER STADIUM	○	●	●	●	×	(Medium)	(10)	×	×	×
ROCK ARENA	○	●	●	●	×	(Medium)	(10)	×	×	×
JAZZ CLUB	○	●	●	●	×	(Medium)	(10)	×	×	×
CLASSIC CONCERT	○	●	●	●	×	(Medium)	(10)	×	×	×
MATRIX	○	●	●		×	×	×	(100 max)	×	×

○ : Signal present or controllable.
△ : Select one according to the speaker configuration setting.
● : Can be turned on and off according to the speaker configuration setting.
× : No signal or not controllable.

*1 When the front speakers are large, no signals are output to the subwoofer, regardless of the speaker settings.
*2 Either the Dolby Digital AC-3 or Dolby Pro Logic mode is set, depending on the type of input signal.

10 LAST FUNCTION MEMORY

- This unit is equipped with a last function memory which stores the input and output setting conditions as they were immediately before the power is switched off.
  This function eliminates the need to perform complicated resettings when the power is switched on.
- The unit is also equipped with a back-up memory. This function provides approximately one week of memory storage when the main unit's power switch is off and with the power cord disconnected.

11 INITIALIZATION OF THE MICROPROCESSOR

When the indication of the display is not normal or when the operation of the unit does not shows the reasonable result, the initialization of the microprocessor is required by the following procedure.

1. Switch off the unit using the main unit's power switch.
2. Hold the following AC-3 RF button and PHONO button, and turn the main unit's power switch on.
3. Check that the entire display is flashing with an interval of about 1 second, and release your fingers from the 2 buttons and the microprocessor will be initialized.

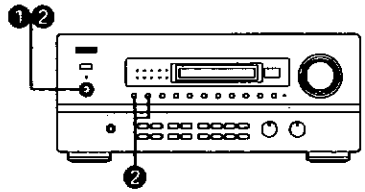

12 TROUBLESHOOTING

If a problem should arise, first check the following:
1. Are the connections correct?
2. Have you operated the receiver according to the Operating Instructions?
3. Are the speakers, turntable, and other components operating properly?

If this unit is not operating properly, check the items listed in the table below. Should the problem persist, there may be a malfunction. Disconnect the power immediately and contact your store of purchase.

	Symptom	Cause	Measures	Page
Common problems arising when listening to the CD, records, tapes, and FM broadcasts, etc.	DISPLAY not lit and sound not produced when power switch set to on.	• Power cord not plugged in securely.	• Check the insertion of the power cord plug. • Turn the power on with the remote control unit after turning the POWER switch on.	7 19
	DISPLAY lit but sound not produced.	• Speaker cords not securely connected. • Improper position of the audio function button. • Volume control set to minimum. • MUTING is on. • Digital signals not input. Digital input selected. • The play mode is set to "EXT.IN".	• Connect securely. • Set to a suitable position. • Turn volume up to suitable level. • Switch off MUTING. • Input digital signals or select input jacks to which digital signals are being input. • Set the play mode to "STEREO".	7, 8 19, 20 19, 20 20 20 6, 19
	–PROTECT– display appears.	• Speaker terminals are short-circuited. • Block the ventilation holes of the set. • The unit is operating at continuous high power conditions and / or inadequate ventilation.	• Switch power off, connect speakers properly, then switch power back on. • Turn off the set's power, then ventilate it well to cool it down. Once the set is cooled down, turn the power back on. • Turn off the set's power, then ventilate it well to cool it down. Once the set is cooled down, turn the power back on.	7, 8 2 2
	Sound produced only from one channel.	• Incomplete connection of speaker cords. • Incomplete connection of input / output cords.	• Connect securely. • Connect securely.	— —
	Positions of instruments reversed during stereo playback.	• Reverse connections of left and right speakers or left and right input / output cords.	• Check left and right connections.	4 ~ 8
	The on screen display is not displayed.	• "On screen display" is set to off on the system setup menu screen.	• Set "on screen display" on the system setup menu screen to on.	13
When playing records	Humming noise produced when record is playing.	• Ground wire of turntable not connected properly. • Incomplete PHONO jack connection. • TV or radio transmission antennas nearby.	• Connect securely. • Connect securely. • Contact your store of purchase.	4 4 —
	Howling noise produced when volume is high.	• Turntable and speaker systems too close together. • Floor is unstable and vibrates easily.	• Separate as much as possible. • Use cushions to absorb speaker vibrations transmitted by floor. If turntable is not equipped with insulators, use audio insulators (commonly available).	— —
	Sound is distorted.	• Stylus pressure too weak. • Dust or dirt on stylus. • Cartridge defective.	• Apply proper stylus pressure. • Check stylus. • Replace cartridge.	— — —
	Volume is weak.	• MC cartridge being used.	• Replace with MM cartridge or use a head amplifier or step-up transformer.	4
Remote control unit	This unit does not operate properly when remote control unit is used.	• Batteries dead. • Remote control unit too far from this unit. • Obstacle between this unit and remote control unit. • Different button is being pressed. • ⊕ and ⊖ ends of battery inserted in reverse.	• Replace with new batteries. • Move closer. • Remove obstacle. • Press the proper button. • Insert batteries properly.	14 14 14 — 14

SPECIFICATIONS

- **Audio section**

(Power amplifier)

Rated output: Stereo (2ch driven)
(All properties shown are only for the power amplifier stage.)
110 W × 2 ch (8 Ω / ohms, 20 Hz ~ 20 kHz with 0.05% T.H.D.)
150 W × 2 ch (8 Ω / ohms, EIAJ)
Surround
105 W × 5 ch (8 Ω / ohms, EIAJ)

Dynamic power: 140 W × 2 ch (8 Ω / ohms)
235 W × 2 ch (4 Ω / ohms)
280 W × 2 ch (2 Ω / ohms)

Output terminals: Front / Center: A or B or Bi-wiring 8 to 16 Ω / ohms
A + B 16 Ω / ohms
Surround: 8 to 16 Ω / ohms

(Analog)

Input sensitivity / input impedance: 200 mV/47 kΩ / kohms
Frequency response: 10 Hz ~ 100 kHz: +0, −3 dB (DIRECT mode)
S / N: 105 dB (DIRECT mode)
Distortion: 0.005% (20 Hz ~ 20 kHz) (DIRECT mode)
Rated output / maximum output: 1.2 V/8 V
Maximum headphones output: 284 mW (8 Ω/ohms)
Phono equalizer (PHONO input — REC OUT)
Input Sensitivity: 2.5 mV
RIAA deviation: ±1 dB (20 Hz to 20 kHz)
Signal-to-noise ratio: 74 dB (A weighting, with 5 mV input)
Rated output / Maximum output: 150 mV / 8 V
Distortion factor: 0.03% (1 kHz, 3 V)

(Digital)

D / A output: Rated output: 2 V (at 0 dB playback)
Total harmonic distortion – 0.005% (1 kHz, at 0 dB)
S/N ratio: 102 dB
Dynamic range: 96 dB

Digital input: Format – Digital audio interface

- **Video section**

(Standard video jacks)

Input / output level and impedance: 1 Vp-p, 75 Ω / ohms
Frequency response: 5 Hz ~ 10 MHz +0, −3 dB

(S-video jacks)

Input / output level and impedance: Y (brightness) signal: 1 Vp-p, 75 Ω/ohms
C (color) signal: 0.286 Vp-p, 75 Ω/ohms

Frequency response: 5 Hz ~ 10 MHz +0, −3 dB

- **General**

Power supply: AC 230 V, 50 Hz (for Asia model)
AC 120 V, 60 Hz (for Taiwan R.O.C. model)

Power consumption: 450 W (for Asia model)
390 W (for Taiwan R.O.C. model)

Maximum external dimensions: 434 (W) × 181 (H) × 486 (D) mm (17-3/32" × 7-1/8" × 19-1/8")
Weight: 21.5 kg (47 lbs 6 oz)

- **Remote control unit (RC-820)**

Batteries: R6P/AA Type (two batteries)
External dimensions: 70 (W) × 215 (H) × 19 (D) mm (2-3/4" × 8-15/32" × 3/4")
Weight: 180 g (Approx. 6 oz) (including batteries)

* For purposes of improvement, specifications and design are subject to change without notice.

WIRE ARRANGEMENT

In case of wires require unclasping or loosening to move the location to perform adjustment or part replacement, be sure to rearrange them neatly to restore properly in the same location as they were originally placed, or causing to produce a noise may occasionally occur.

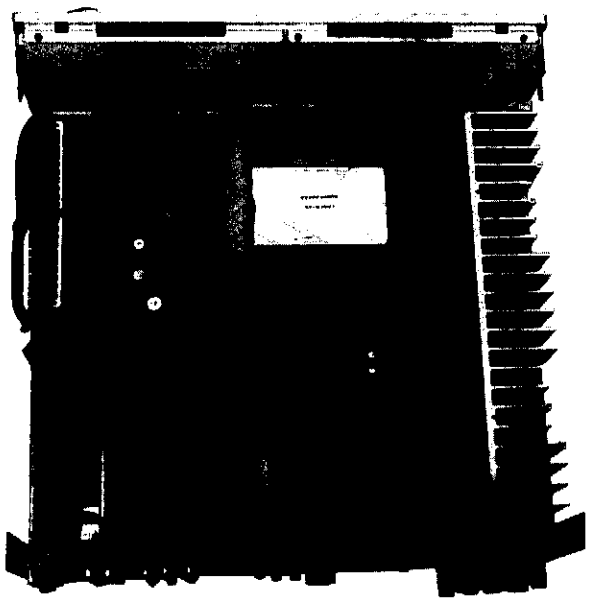

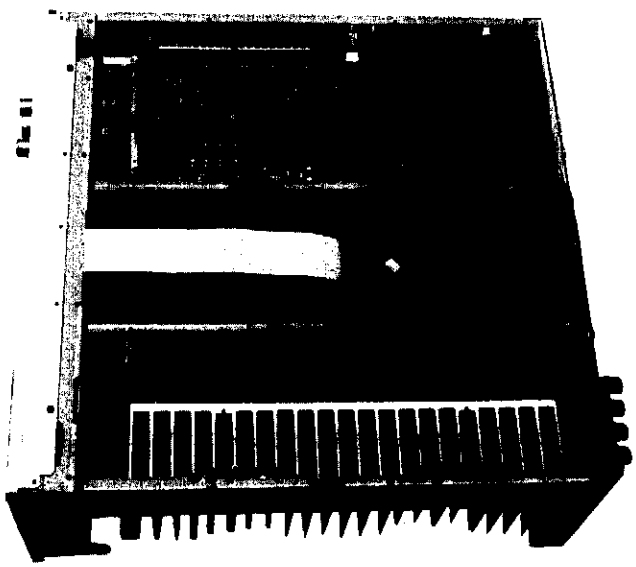

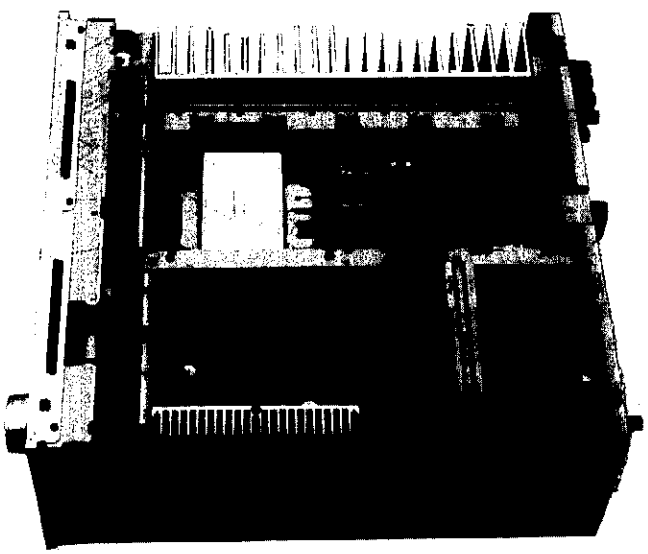

DISASSEMBLY

(To reassemble reverse disassembly)

Note: When detached the Bottom Cover, do not remove the Back Panel except the unit is in the normal putting state.

1. Top Cover

Remove 10 screws Ⓐ fixing the Top Cover and 4 screws Ⓑ mounting the Rear Panel, then detach the Top Cover as shown in the arrow direction.

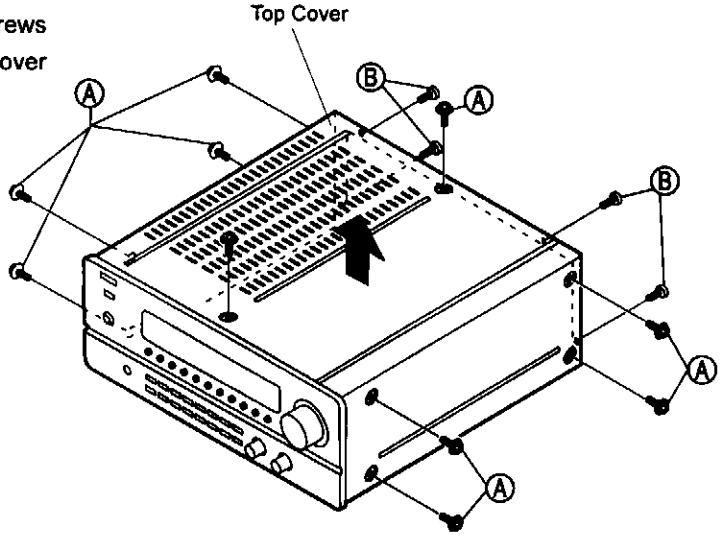

2. Front Panel

Remove 3 upper screws Ⓒ and 2 below screws Ⓓ, pull out 2 Tone Knobs.

After removing the Front Panel as shown in the arrow direction, and disconnect FFC cable which connected to the FLD P.W.Board, 5P connector and power switch connector, then detach the Front panel.

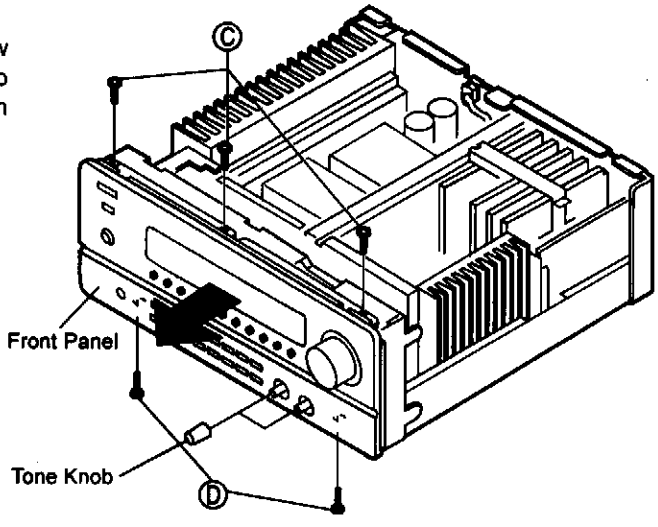

3. Each Front Panel P.W.Board

Pull out the Master VR Knob and remove the Nut.

Remove 6 screws Ⓔ mounting the Front Panel and detach the Remocon Unit (1U-2949-3) and the Power SW Unit (1U-2949-11).

Remove 7 screws Ⓕ mounting the Front Panel and detach the switch Unit (1U-2951-5).

Remove a screw Ⓖ and 9 screw Ⓗ mounting the Front Panel, and detach the Master VR Unit (1U-2951-4) and the Display Unit (1U-1951-3) together.

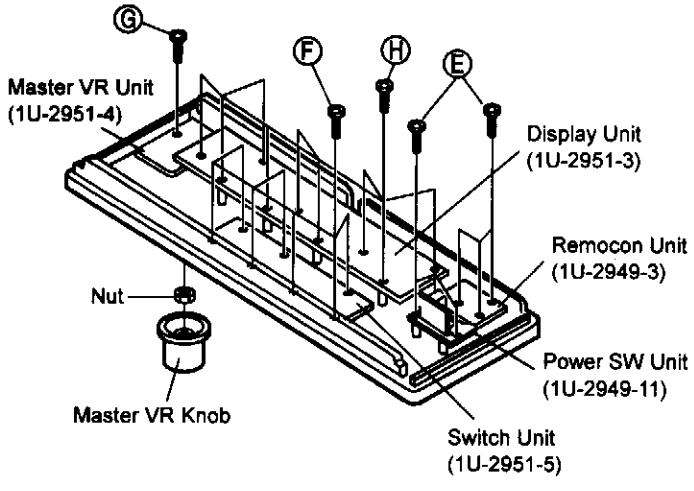

4. MCON Unit (1U-2959-2)

Remove 22 screws Ⓘ fixing the Bottom Cover, and detach the Bottom Cover.
Remove 7 screws Ⓙ mounting the Back Panel, and detach the Back Plate.

Notes:

- When servicing the unit, do not detach the Back Panel except the unit is in the normal putting state.
- Be careful that when removing 7 screws Ⓙ mounting the Back plate and digital input (Coaxial & AC3-RF), the digital coaxial & AC3-RF will not actuate normally.
- When the unit is putted horizontally in the detached bottom cover state, be sure to do not bring pressure forcefully to the P.W.B. Holder of the wiring Unit (1U-2958-2) P.W.B..

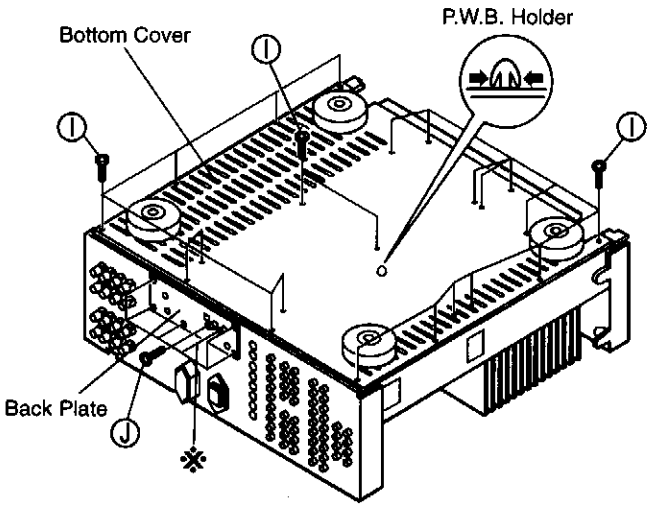

Remove 6 screws Ⓚ fixing the MCON Unit, detech the MCON Unit (1U-2959-2) as shown in the arrow direction, then disconnect a connector and 2 FFC cables.

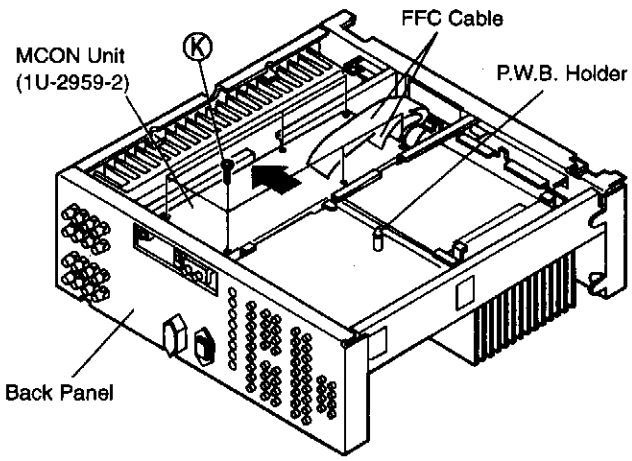

5. Each P.W.Board

5-1 Power Radiator

Remove 2 screws Ⓛ fixing the Power Radiator.

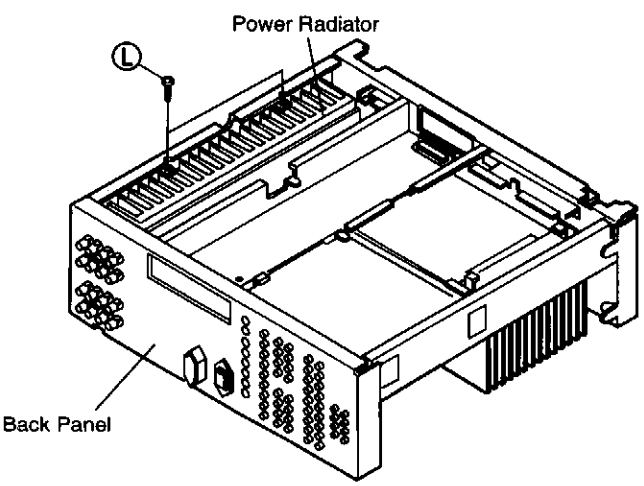

Remove 9 screws Ⓜ fixing the Support Bracket, Support Bracket and shield chassis, and detach them.
Remove 2 screws Ⓝ, then detach the Power Radiator.

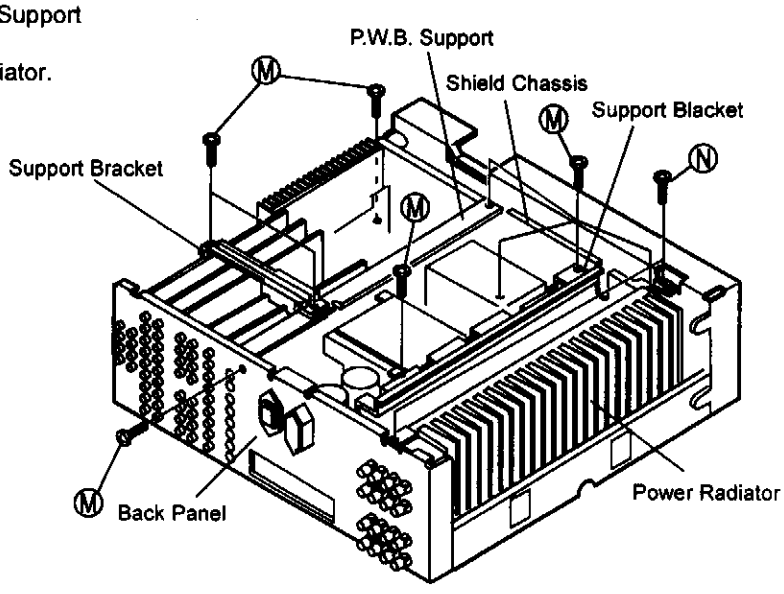

5-2 Each P.W.Board mounting the Back Panel

Remove 4 screws Ⓞ fixing the Back Panel and 18 Screws Ⓟ Fixing the Tuner Unit (1U-2948-2), Audio in Unit (1U-2948-1), Pre Amp Unit (1U-2949-1), C. Video Unit (1U-1951-2), S. Video Unit (1U-2951-1) and Power Unit (1U-2952-4), then detach the each P.W.Board as shown in the arrow direction.

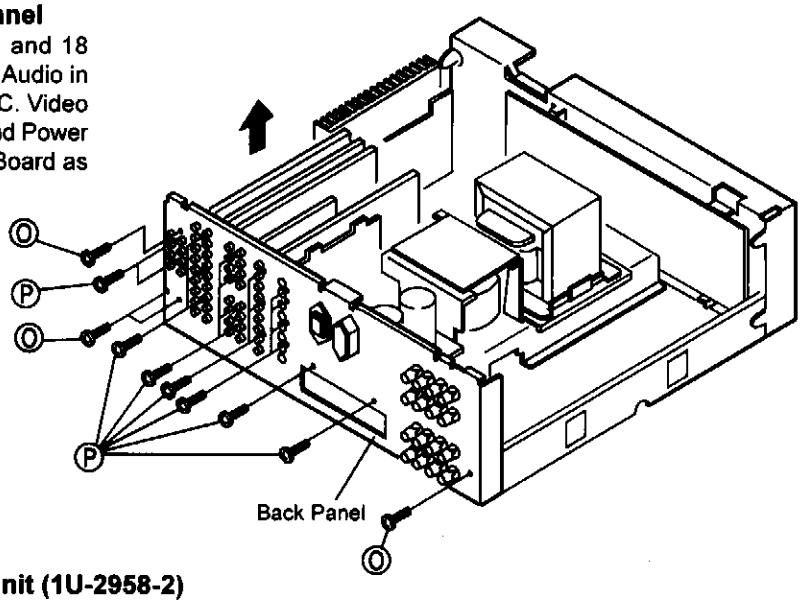

5-3 EXT. IN Unit (1U-2948-3) and Wiring Unit (1U-2958-2)

Remove a screw Ⓠ fixing the shield Bracket and remove 2 screws Ⓡ fixing the EXT. IN Unit (1U-2948-3), then detach the EXT. IN Unit.
Remove 4 screws Ⓢ fixing the wiring Unit (1U-2958-2), then detach the Wiring Unit.

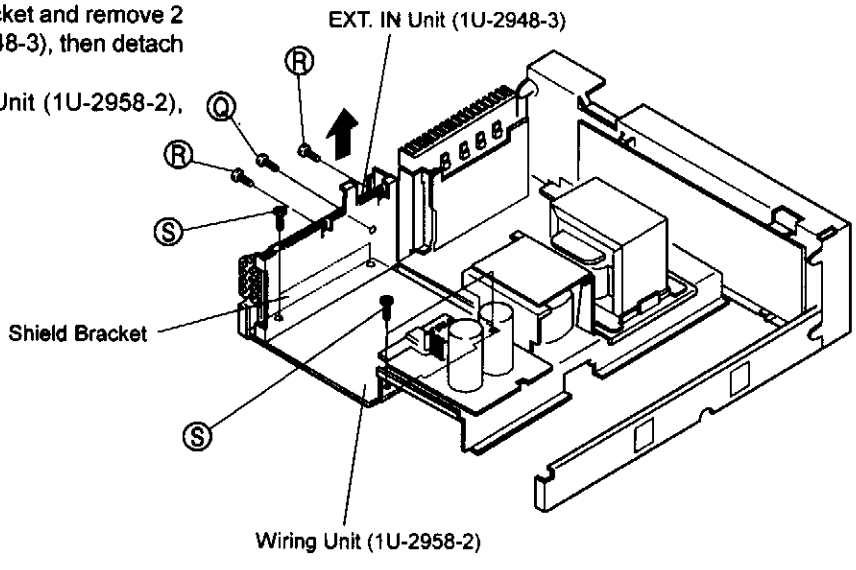

CONTROL ADVISABILITY OF EACH MODE

	FRONT L LEV.	FRONT R LEV	CENTER LEVEL	SURROUND L LEV	SURROUND R LEV	S. WOOFER LEVEL	INPUT LEVEL	ROOM SIZE	EFFECT LEVEL	DELAY TIME	CINEMA EQ	D. COMP	TEST TONE
DIRECT	O	O	X	X	X	O*4	X	X	X	X	X	O*7	
STEREO	O	O	X	X	X	O*3	O*6	X	X	X	X	O*7	
EXTERNAL INPUTS	O	O	O*1	O*2	O*2	O*3	X	X	X	X	X	X	
MONO	O*5	O*5	O*5	X	X	O*3	O*6	X	X	X	X	X	
5CH STEREO	O	O	O*1	O*2	O*2	O*3	O*6	X	X	X	X	X	
DOLBY AC-3 or DLOBY PROLOGIC	O	O	O*1	O*2	O*2	O*3	O*6	X	X	X	O	O*7	O*8
SUPER STADIUM	O	O	O*1	O*2	O*2	O*3	O*6	O	O	X	X	X	
ROCK ARENA	O	O	O*1	O*2	O*2	O*3	O*6	O	O	X	X	X	
JAZZ CLUB	O	O	O*1	O*2	O*2	O*3	O*6	O	O	X	X	X	
CLASSIC CONCERT	O	O	O*1	O*2	O*2	O*3	O*6	O	O	X	X	X	
MATRIX	O	O	O*1	O*2	O*2	O*3	O*6	X	X	O	X	X	

O : Feasible to control X : Infeasible to control

O*1 : According to the contents of set up menu, when no center speaker is provided, with no controlling and sets - ∞ data to center electronic volume.
O*2 : According to the contents of set up menu, when no surround speaker is provided, with no controlling and sets - ∞ data to surround electronic volume.
O*3 : According to the contents of set up menu, when no woofer is provided, with no controlling and sets - ∞ data to woofer electronic volume.
O*4 : No controlling when front speaker is set to LARGE.
O*5 : According to the contents of set up menu, when no center speaker is provided, controls front L/R and not to control center. And when center speaker is set to SMALL or LARGE, controls center and not to control front L/R.
O*6 : Feasible to control only at analog input. Note that, this function corresponds to each input channel.
O*7 : Feasible to control only at AC-3 input.
O*8 : Feasible to control TEST TONE in all modes of set up menu.

Additional note : Each mode's FRONT/CENTER/SURROUND/S. WOOFER DELAY should be set according to the setting contents of delay time for set up menu.

DIGITAL/ANALOG, SURROUND MODE IN EACH INPUT FUNCTION AND INITIAL SETTING OF DIGITAL FUNCTION

INPUT FUNCTION	DIGITAL/ANALOG	SURROUND MODE	DIGITAL FUNCTION
PHONO	FORCED ANALOG	STEREO	INFEASIBLE TO SET
CD	ANALOG	STEREO	COAXIAL
TUNER	FORCED ANALOG	STEREO	INFEASIBLE TO SET
VDP/DVD	ANALOG	DOLBY PRO LOGIC	OPTICAL
AC-3 RF	AUTO (FORCED DIGITAL)	DOLBY AC-3	AC-3 RF
TV/DBS	ANALOG	STEREO	OFF
V. AUX	ANALOG	STEREO	OFF
VCR-1	ANALOG	DOLBY PRO LOGIC	OFF
VCR-2	ANALOG	STEREO	OFF
DAT/TAPE-1	ANALOG	STEREO	OFF
TAPE-2	FORCED ANALOG	STEREO	INFEASIBLE TO SET

SEMICONDUCTORS

● **IC's**

Note: Indications before IC numbers denote P.W.B. name.

AU : Audio IN. Unit
VI : Video P.W.B. Unit
DS : DSP P.W.B. Unit
PS : Power Supply P.W.B. Unit
Pr : Pre Amp P.W.B. Unit

TMP87CS71F-6519 (DS: IC401)
TMP87CP71F-6520 (DS: IC402)

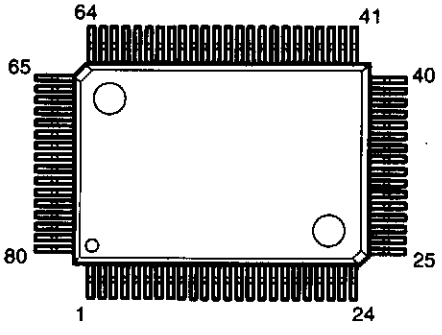

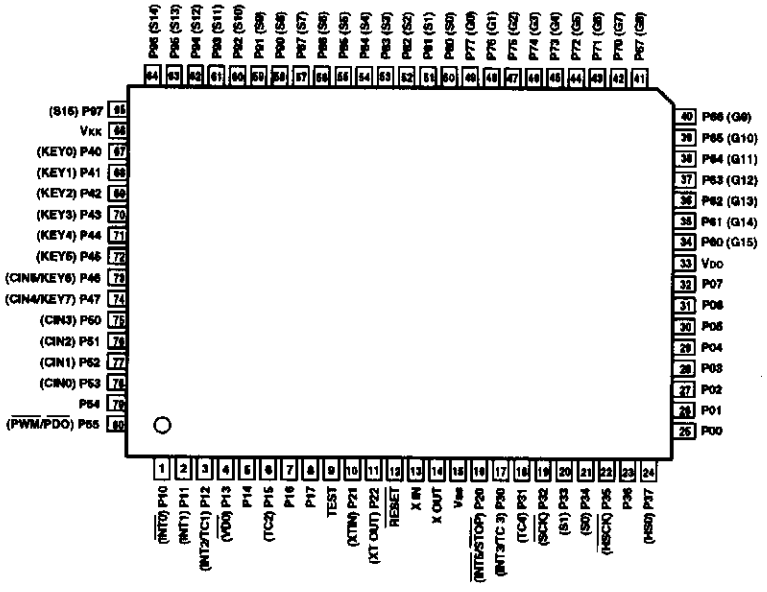

MCM6205D-15
(DS: IC051, 052, 308)

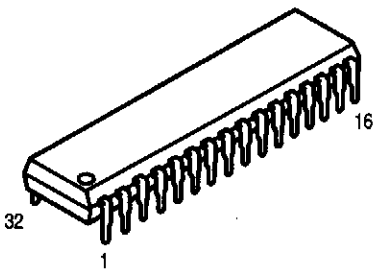

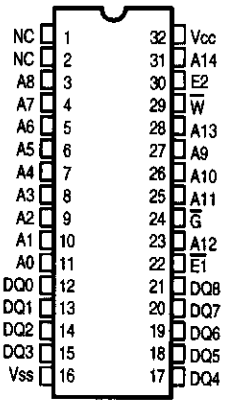

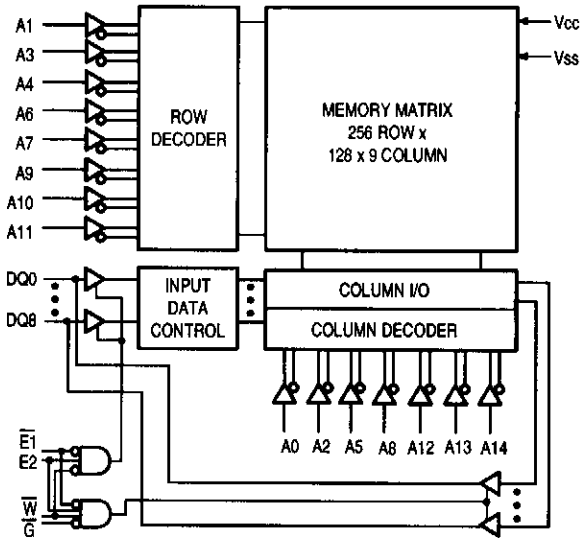

MCM6205D-15 Terminal Function

Pin No.	Symbol	I/O	Function
1	N.C.	–	No connection.
2	N.C.	–	No connection.
3	A8	I	Address 8 input.
4	A7	I	Address 7 input.
5	A6	I	Address 6 input.
6	A5	I	Address 5 input.
7	A4	I	Address 4 input.
8	A3	I	Address 3 input.
9	A2	I	Address 2 input.
10	A1	I	Address 1 input.
11	A0	I	Address 0 input.
12	DQ0	I/O	Data input/output.
13	DQ1	I/O	Data input/output.
14	DQ2	I/O	Data input/output.
15	DQ3	I/O	Data input/output.
16	GND	–	Ground.
17	DQ4	I/O	Data input/output.
18	DQ5	I/O	Data input/output.
19	DQ6	I/O	Data input/output.
20	DQ7	I/O	Data input/output.
21	DQ8	I/O	Data input/output.
22	$\overline{E}$	I	Chip enable input.
23	A12	I	Address 12 input.
24	$\overline{G}$	I	Output buffer control input signal.
25	A11	I	Address 11 input.
26	A10	I	Address 10 input.
27	A9	I	Address 9 input.
28	A13	I	Address 13 input.
29	$\overline{W}$	I	Write enable input.
30	E2	I	Chip enable input.
31	A14	I	Address 14 input.
32	Vcc	–	+5V power supply.

CS8412CS
(DS: IC18)

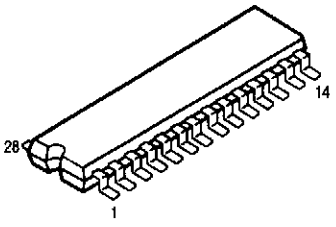

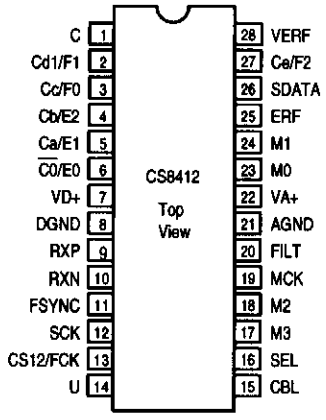

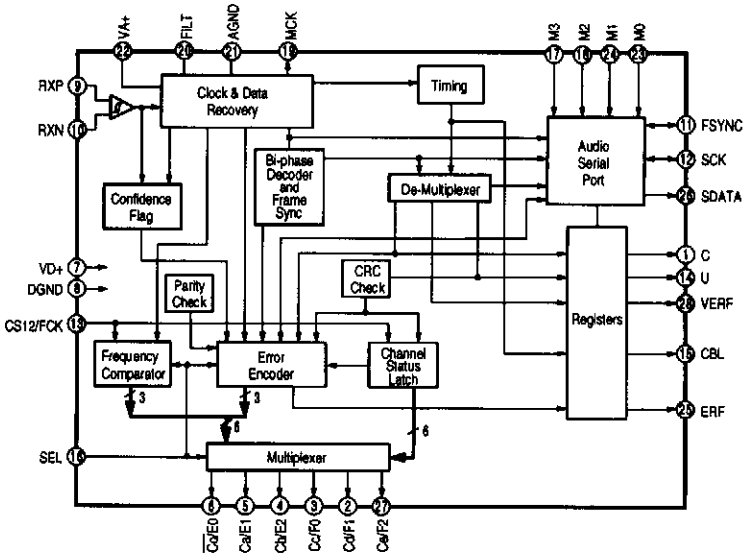

CS8412CS Terminal Function

Pin No.	Symbol	I/O	Function
1	C	I	C.S. bit input.
2	Cd F1	O	C.S. bit output/Frequency indication (H: C.S. bit output, L: Frequency indication).
3	Cc F0		CO="0" in C.S. bit is for professional use, and CO="1" is for general use.
4	Cd E2	O	C.S. bit output/Error indication (H: C.S. bit output, L: Error indication). CO="0" in C.S. bit is for professional use, and CO="1" is for general use.
5	Ca E1		
6	C0/E0		
7	VD+	–	Digital +5V power supply.
8	DGND	–	Connect to digital ground.
9	RXN	I	Differential line receiver signal. Compatible with RS422.
10	RXP		
11	FSYNC	I/O	Frame sync signal.
12	SCK	I/O	Serial clock signal, 32 clock is included with each audio sample in output status.
13	CS12/FCK	I	Channel selection/Reference frequency (H: Channel selection, L: Reference frequency). CS12 selects the channel output to C.S. terminal. "0" is for sub frame 1, and "1" is for sub frame2. Input frequency can be detected by 6.144 MHz clock input to FCK.
14	U	I	User (U) bit terminal.
15	CBL	O	C.S. block output terminal.
16	SEL	I	C.S. F2-F0, E2-E0 selection signal (H: C.S. bit output, L: Frequency/Error indication).
17	M3	I	Serial port mode select signal.
18	M2		
19	MCK	I	Master clock signal (Low jitter clock output with 256 times of receiving frequency).
20	FILT	I	Filter terminal, connect resistor 1kohm and capacitor 0.047 µF between this terminal and AGND.
21	AGND	–	Connect to analog ground.
22	VA+	–	Analog +5V power supply (Noise for this power supply should be minized as lower as possible since it affects jitter's performance of playback clock directly).
23	M0	I	Serial port mode select signal.
24	M1		
25	ERF	O	Error flag aignal.
26	SDATA	O	Serial data signal.
27	Ce F2	O	C.S. bit output/Frequency indication (H: C.S. bit output, L: Frequency indication). CO="0" in C.S. bit is for professional use, and CO="1" is for general use.
28	VERF	O	Parity and Error flag signal.

MSC1937-03RS
(VI: IC102)

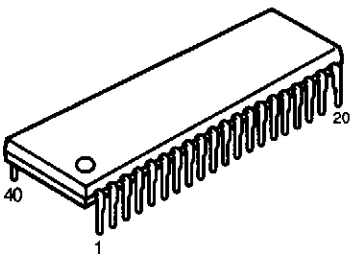

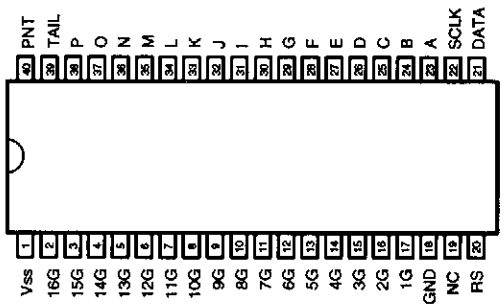

MSC1937-03RS Terminal Function

Pin No.	Symbol	I/O	Function
1	Vss	–	Power supply (+5V).
2	16G	O	Digit 16 output.
3	15G	O	Digit 15 output.
4	14G	O	Digit 14 output.
5	13G	O	Digit 13 output.
6	12G	O	Digit 12 output.
7	11G	O	Digit 11 output.
8	10G	O	Digit 10 output.
9	9G	O	Digit 9 output.
10	8G	O	Digit 8 output.
11	7G	O	Digit 7 output.
12	6G	O	Digit 6 output.
13	5G	O	Digit 5 output.
14	4G	O	Digit 4 output.
15	3G	O	Digit 3 output.
16	2G	O	Digit 2 output.
17	1G	O	Digit 1 output.
18	GND	–	Ground.
19	NC	–	No connection.
20	RS	I	POWER-ON-RESET. (H: RESET)
21	DATA	I	Data input.
22	SCLK	I	Shift clock input.
23	A	O	Seg,ent A output.
24	B	O	Segment B output.
25	C	O	Segment C output.
26	D	O	Segment D output.
27	E	O	Segment E output.
28	F	O	Segment F output.
29	G	O	Segment G output.
30	H	O	Segment H output.
31	I	O	Segment I output.
32	J	O	Segment J output.
33	K	O	Segment K output.
34	L	O	Segment L output.
35	M	O	Segment M output.
36	N	O	Segment N output.
37	O	O	Segment O output.
38	P	O	Segment P output.
39	TAIL	–	No connection.
40	PNT	O	Point output.

LC7536
(AU: IC503, 504)
(Pr: IC601, 604)

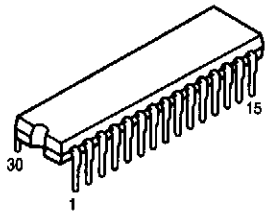

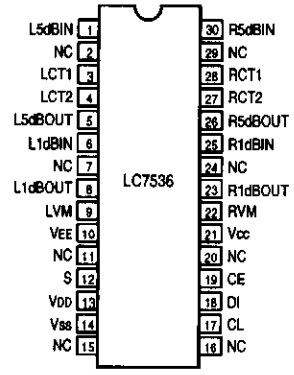

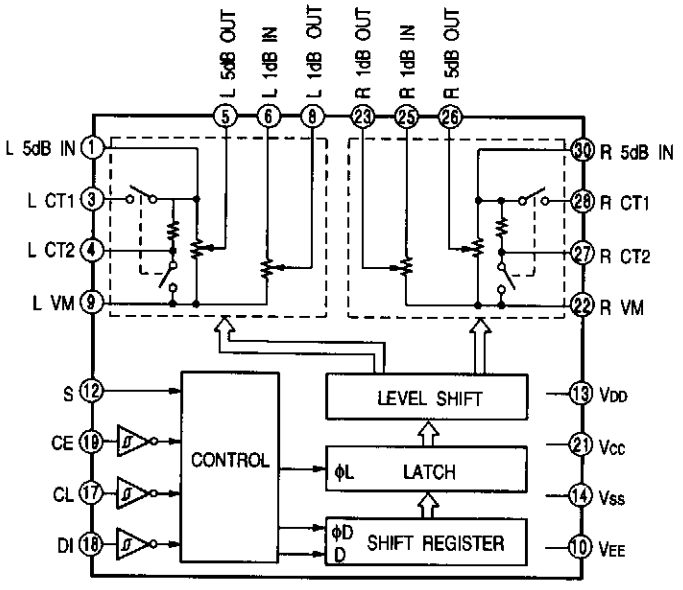

LC7536 Terminal Function

Pin No.	Symbol	I/O	Function
1	L 5dB IN	I	Input terminal for 5dB step attenuator, it should be driven with low impedance path.
2	NC	–	No connection.
3	L CT1	I	For loudness control, connect a capacitor between CT1 and 5dB IN with high frequency compensation, and also connect a capacitor between CT2 and Vm with low frequency compensation.
4	L CT2		
5	L 5dBOUT	O	Output terminal for 5dB step attenuator with approx. 1Mohm load impedance.
6	L 1dBIN	I	Input terminal for 1dB step attenuator, it should be driven with low impedance.
7	NC	–	No connection.
8	L 1dBOUT	O	Output terminal for 1dB step attenuator with approx. 47kohm ~ 1Mohm load impedance.
9	L VM		Common terminal for volume control.
10	VEE	I	Connect to power supply.
11	NC	–	No connection.
12	S		Selection terminal for address code during data format.
13	VDD	I	Connect to power supply (Pay attention to the rising time so that Vcc does rise up faster than VDD when the power turns).
14	Vss	I	Connect to power supply.
15	NC	–	No connection.
16	NC	–	No connection.
17	CL	I	Input terminal for controlling LC7536 serial data with 0 ~ 5V amplitude.
18	DI		
19	CE		
20	NC	–	No connection.
21	Vcc	I	Connect power supply (Pay attention to the rising time so that Vcc does not rise up faster than VDD when the power turns).
22	R VM		Common terminal for volume control.
23	R 1dBOUT	O	Output terminal for 1dB step attenuator with approx. 47kohm ~ 1Mohm load impedance.
24	NC	–	No connection.
25	R 1dBIN	I	Input terminal for 1dB step attenuator, it should be driven with low impedance.
26	R 5dBOUT	O	Output terminal for 5dB step attenuator with approx. 1Mohm load impedance.
27	R CT2		For loudness control, connect a capacitor between CT1 and 5dBIN with high frequency compensation, and also connect a capacitor between CT2 and Vm with low frequency compensation.
28	R CT1		
29	NC	–	No connection.
30	R SdBIN	I	Input terminal for 5dB step attenuator, it should be driven with low impedance path.

AK5340VS
(DS: IC101)

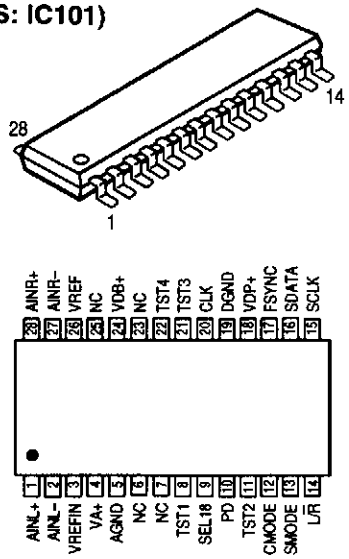

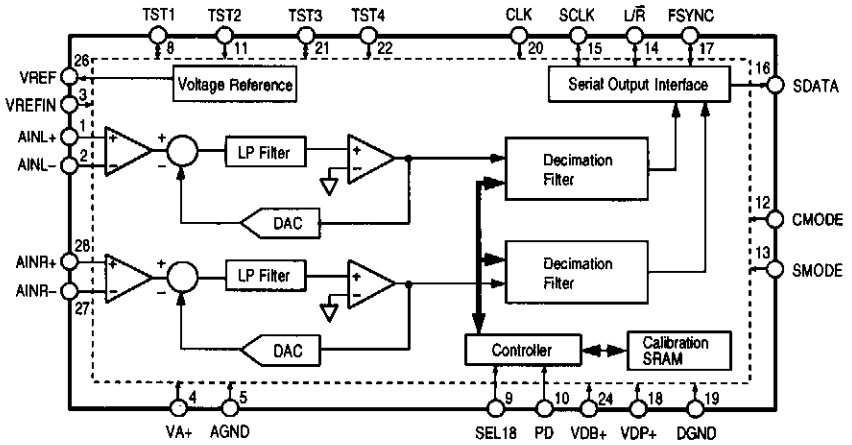

AK5340VS Terminal Function

Pin No.	Symbol	I/O	Function
1	AINL+	I	L ch analog non inverting input.
2	AINL–	I	L ch analog inverting input.
3	VREFIN	I	Reference voltage input.
4	VA+	—	Analog +5V power supply.
5	AGND	—	Analog ground.
6	NC		No connection.
7	NC		No connection.
8	TST1		Test terminal, open or connect to DGND.
9	SEL18	I	Output data length selecting terminal (built in pull down resistance) (L: 16 bit, H: 18 bit).
10	PD	I	Power down signal (H: Power down).
11	TST2		Test terminal, open or connect to DGND.
12	CMODE	I	Master clock selecting terminal. L: CLK = 256fs (12.288MHz @fs = 48kHz) H: CLK = 384fs (18.432MHz @fs = 48kHz)
13	SMODE	I	Interface clock selecting terminal (L: Slave mode, H: Master mode).
14	L/$\overline{R}$	I/O	Input channel selecting terminal. Slave mode: fs clock input. Master mode: fs clock output.
15	SCLK	I/O	Serial data clock terminal. Slave mode: 32fs ~ 64fs clock input. Master mode: 64fs clock output.
16	SDATA	O	Serial data output terminal, data sequence output from MSB with 2's complement.
17	FSYNC	I/O	Frame sync clock terminal. Slave mode: Enable SDATA output at H. Master mode: 2fs clock output.
18	VDP+	—	Digital +5V power supply.
19	DGND	—	Digital ground.
20	CLK	I	Master clock input terminal. CMODE = "H" = 384fs CMODE = "L" = 256fs
21	TST3		Test terminal, open or connect to DGND.
22	TST4		Test terminal, open or connect to DGND.
23	NC		No connection.
24	VDB+	—	Digital +5V power supply.
25	NC		No connection.
26	VREF	O	Reference voltage output.
27	AINR–	I	R ch analog inverting input.
28	AINR+	I	R ch analog non inverting input.

Note: All other terminals except the above are no connection (NC). NC terminals are not bonded internally.

M35015-204SP
(VI: IC414)

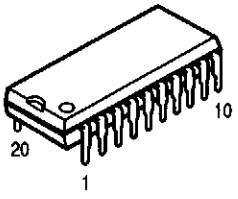

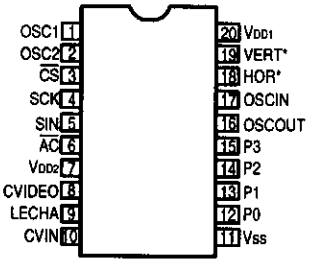

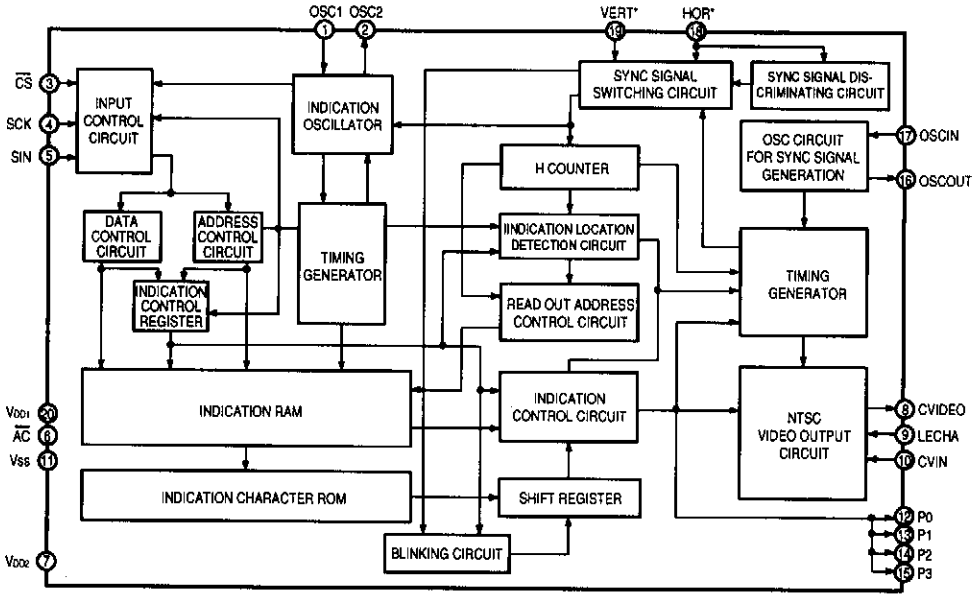

M35015-204SP Terminal Function

Pin No.	Symbol	Name	I/O	Function
1	OSC1	Osc. circuit ext. terminal.	I	External terminal for indication oscillator circuit. Standard OSC. freq. is approx. 7MHz.
2	OSC2		O	With this OSC. freq., decides horizontal indicatin and character width.
3	$\overline{CS}$	Chip select input	I	Chip select terminal and turns to "L" when transfer serial data. Hysteresis input. Pull up resistor is built-in.
4	SCK	Serial clock input	I	Takes in serial data of SIN at SCK rise when $\overline{CS}$ terminal is in "L". Hysteresis input. Pull up rersist is built-in.
5	SIN	Serial data input	I	Serial input of register for indication control and data, and address for indication data memory. Hysteresis input. Pull up rersistor is built-in.
6	$\overline{AC}$	Auto-clear input	I	Resets internal circuit of IC at "L" mode. Hysteresi input. Pull up resistor is built-in.
7	V_{DD2}	Power supply	—	Power supply terminal of analog system. Connect to +5V.
8	CVIDEO	Combined video output	O	Output terminal of combined video signal. Outputs 2Vp-p combined signal. Character output, etc. Overlap CVIN signal and outputs at superimpose.
9	LECHA	Character level input	I	Input terminal deciding character output level in combined video signal. color of character is white.
10	CVIN	Combined video input	I	Input terminal of external combined video signal. Character output etc. overlap this external combined video signal.
11	Vss	Ground	—	Ground terminal. Connect to GND.
12	P0	Output port p0	O	General output or character background signal BL NK1* output is switchable. Polarity can be selected at ROM mask.
13	P1	Output port P1	O	General output or character background signal CO1* output is switchable. Polarity can be selected at ROM mask.
14	P2	Output port P2	O	General output or character background signal BLNK2* output is switchable. Polarity can be selected at ROM mask.
15	P3	Output port P3	O	General output or character background signal CO2* output is switchable. Polarity can be selected at ROM mask.
16	OSCOUT	Ext. terminal for sync sig. OSC. Circuit	O	Terminal for external use of sync signal OSC. circuit. Use the freq.: 14.32MHz at NTSC system, 17.73MHz at PAL. system, 14.30MHz at MPAL system.
17	OSCIN		I	
18	HOR*	Horizontal sync signal	I	Inputs horizontal sync signal. Hysteresis input.
19	VERT*	Vertical sync signal	—	Input vertical sync signal. Hysteresis input. Polarity can be selected at ROM mask.
20	V_{DD1}	Power supply	I	Power supply terminal of digital system. Connect to +5V.

ZR38500 (A3) (DS: IC001)

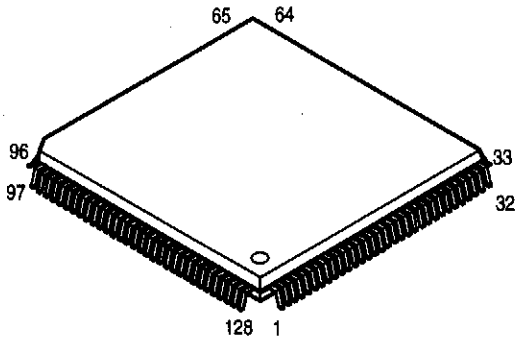

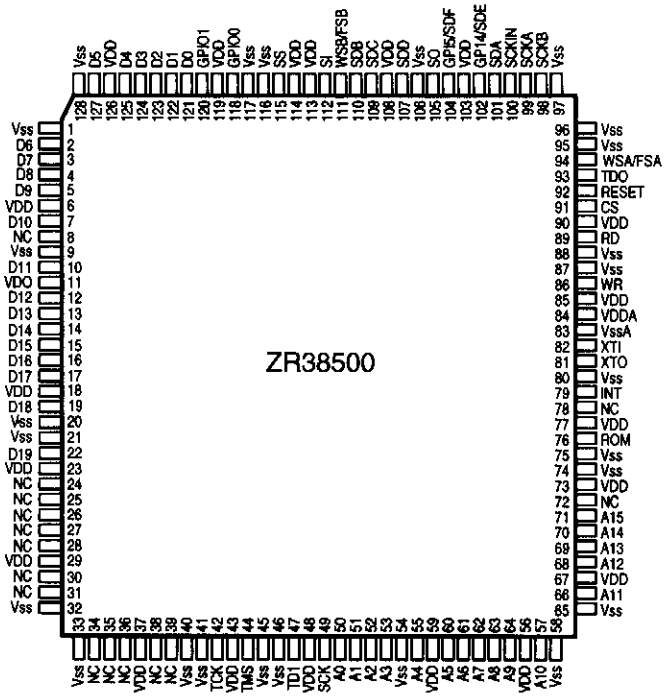

NJU7313AL (DS: IC208) (AU: IC605)

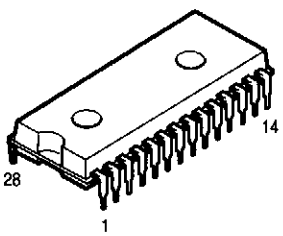

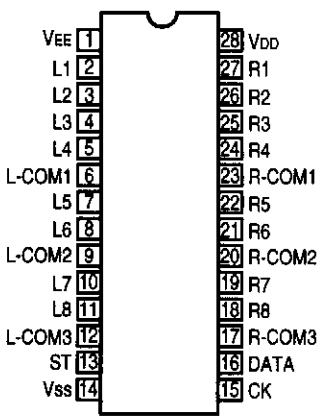

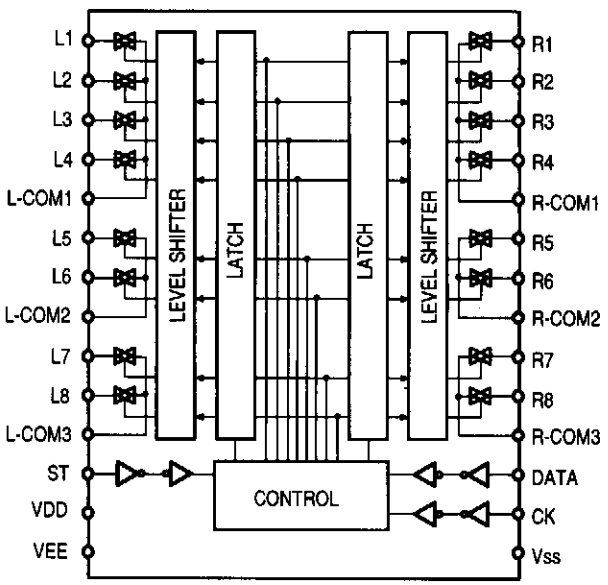

TC9273N-004 (AU: IC111) (Pr: IC751)

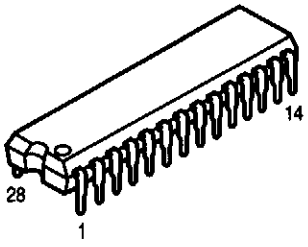

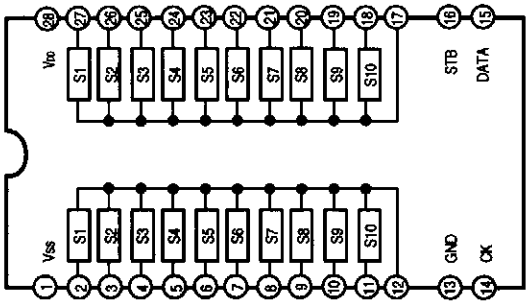

TC9273N-004 Terminal Function

Pin No.	Symbol	I/O	Function
1	Vss	–	Use for double power supply: V_{DD} = 8.0 ~ 17V, GND = 0V, Vss = -8.0 ~ -17V. Use for signal power terminal: V_{DD} = 8.0 ~ 18V, Vss = GND = 0V
2~12	S1~10	I	Analog switch input terminal.
13	GND	–	Use for double power supply: V_{DD} = 8.0 ~ 17V, GND = 0V, Vss = -8.0 ~ -17V. Use for signal power terminal: V_{DD} = 8.0 ~ 18V, Vss = GND = 0V
14	CK	I	Clock input for data transfer.
15	DATA	I	Serial input for switch setting.
16	STB	I	Strobe input for data reading.
17~27	S1~10	I	Analog switch input terminal.
28	V_{DD}	–	Use for double power supply: V_{DD} = 8.0 ~ 17V, GND = 0V, Vss = -8.0 ~ -17V. Use for signal power terminal: V_{DD} = 8.0 ~ 18V, Vss = GND = 0V

PCM69AP

(DS: IC504, 505, 506)

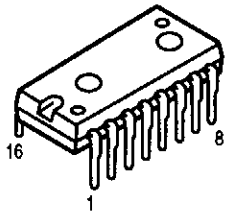

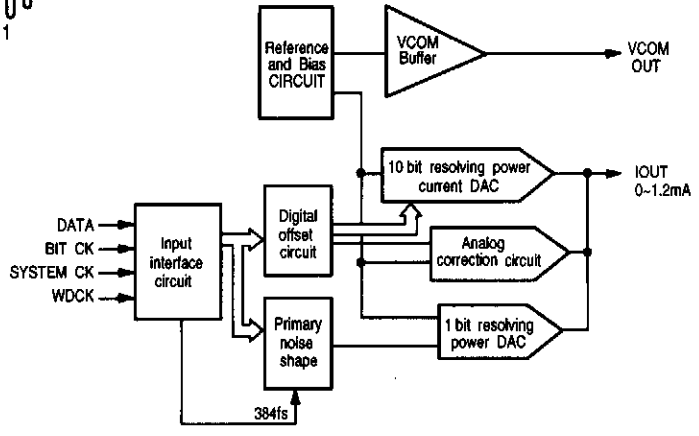

Pin No.	Function
1	+Vcc (Analog power supply)
2	Vcom. Lch
3	Lout. Lch
4	Servo. DC
5	REF. DC
6	Lout. Rch
7	Vcom. Rch
8	A-GND (Analog common)
9	D-GND (Digital common)
10	DATA Rch
11	BCK
12	SYS CLK
13	WDCK
14	DATA Lch
15	TP1
16	+V_{DD} (Digital power supply)

M66310FP
(VI: IC101)

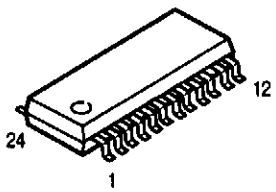

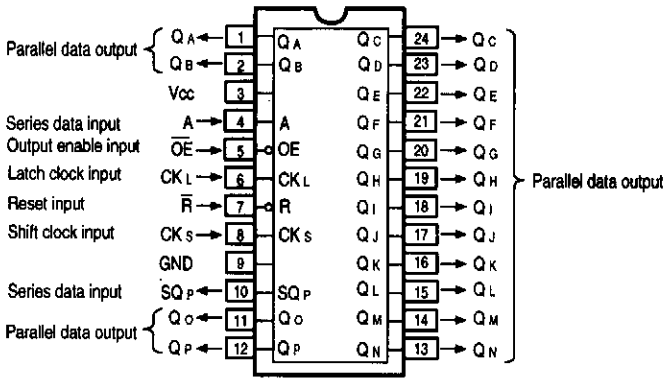

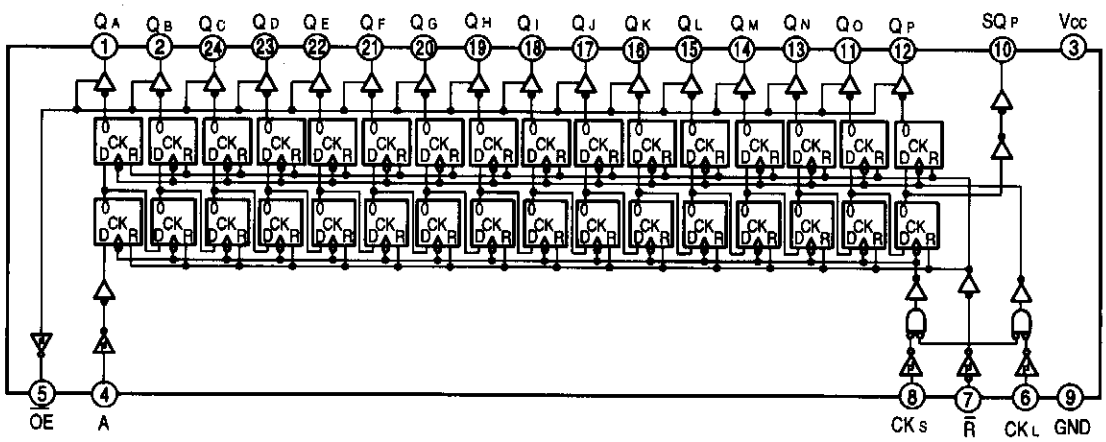

SG-531PH (33MHz)
(DS: IC003)
SG-531PH (46.08MHz)
(DS: IC307)
SG-531PH (12.288MHz)
(DS: IC102)

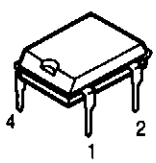

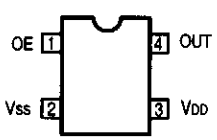

NJM360M
(DS: IC303)

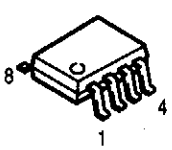

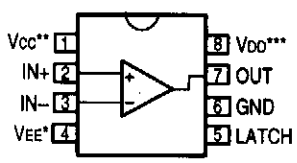

* ANALOG V–
AND SUBSTRATE
** ANALOG V+
*** ANALOG V+

HD74HC14FP (DS: IC021)
HD74HC74FP (DS: IC016)
TC74HC00AF (DS: IC019)
TC74HCU04AF (DS: IC304, 309, 314)

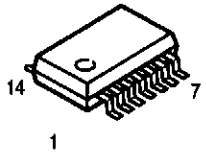

HD74HC14FP

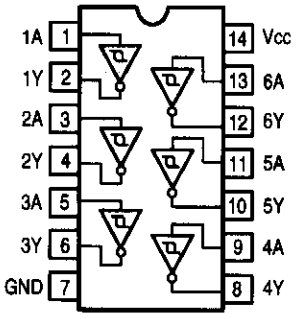

HD74HC74FP

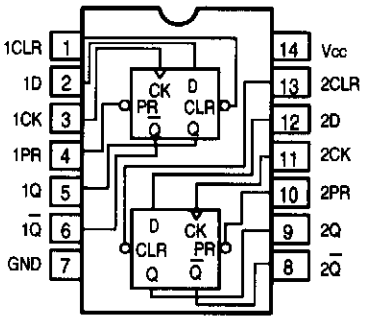

TC74HC00AF

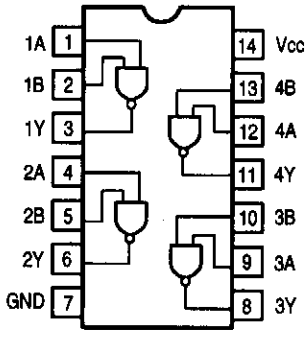

TC74HCU04AF

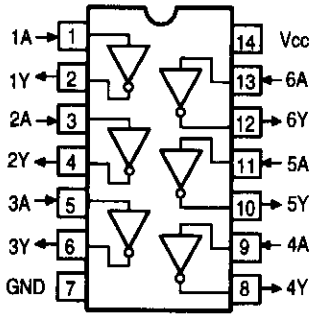

BA4510F (DS: IC103, 104)
BA10393F (DS: IC105)
BA15218F (DS: IC302, 305)
(AU: 104~109)
NJM5532MD (AU: IC102, 103, 114, 601~604)
(Pr: IC603, 606)
NJM2068MD (Pr: IC602, 605)
(DS: IC154~156, 201~207, 507~509)
(AU: IC101, 113, 501, 502, 505~508)

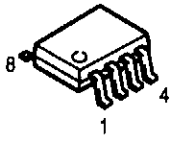

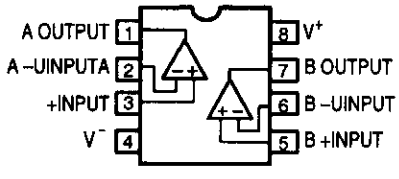

HD74HC157FP (DS: IC017)
TC74HC123AF (DS: IC020)
TC74HC151AF (DS: IC315)

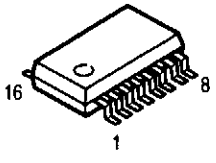

HD74HC157FP

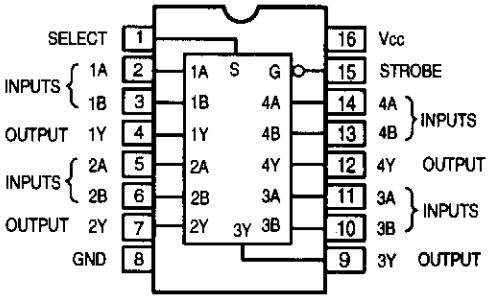

TC74HC123AF

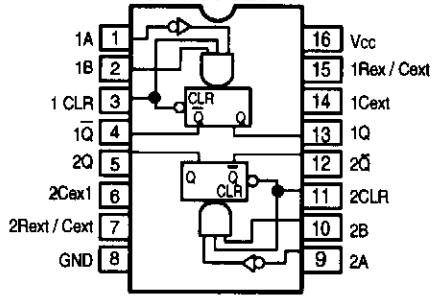

TC74HC151AF

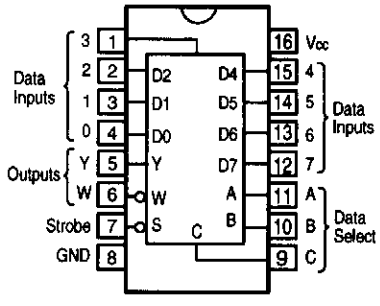

PD4606A
(DS: IC306)

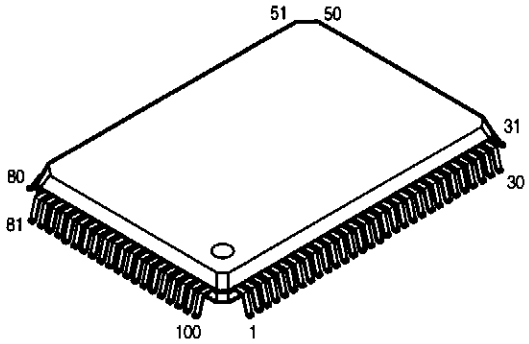

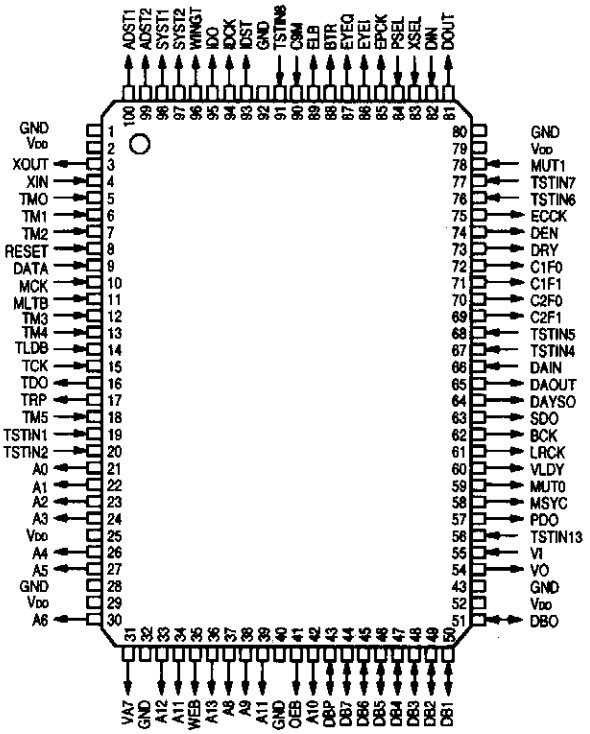

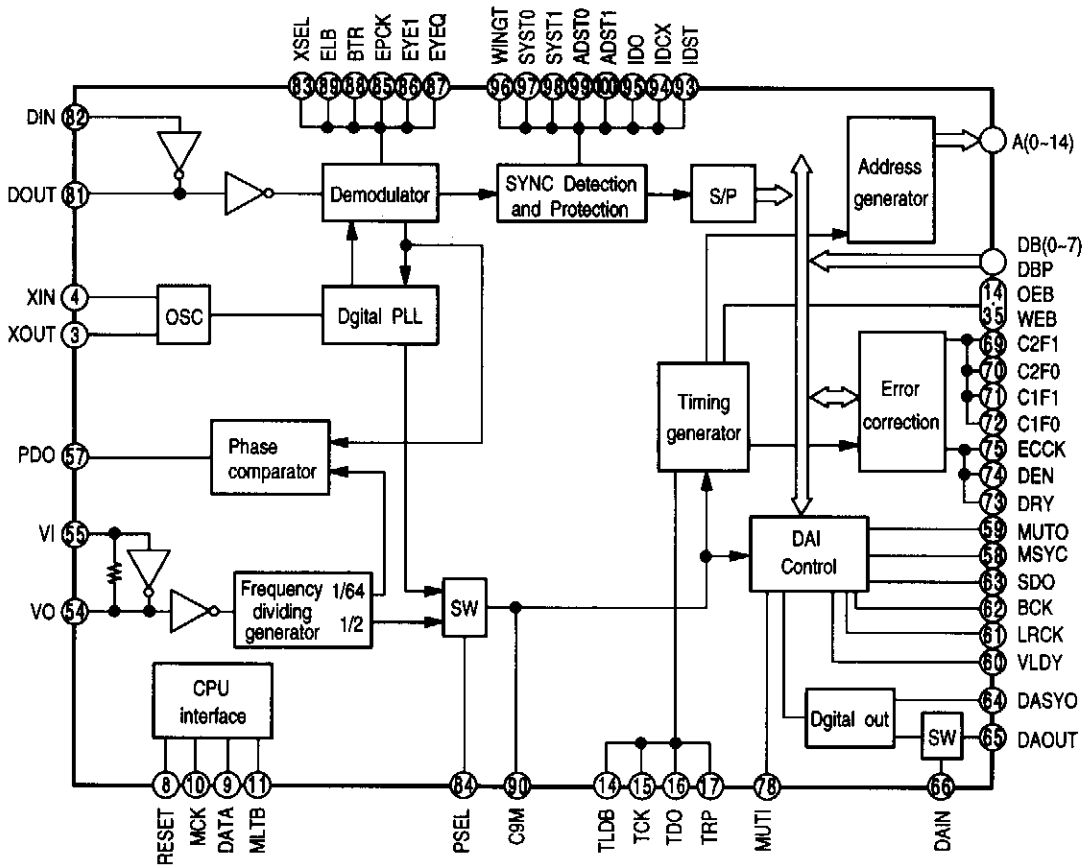

NJM7805FA (S) (Pr: IC403) (PS: IC901, 905)
NJM7806FA (S) (PS: IC402, 903)
NJM7815FA (Pr: IC405)

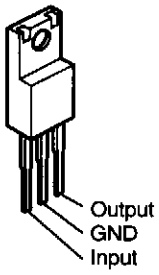

NJM7905FA (Pr: IC404) (PS: IC902)
NJM7906FA (PS: IC904)
NJM7915FA (Pr: IC406)

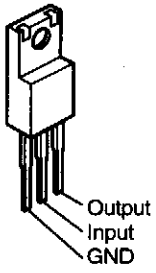

SM5841HS (DS: IC501~503)

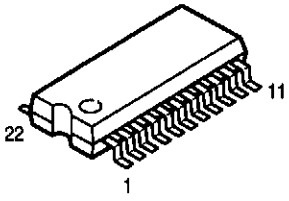

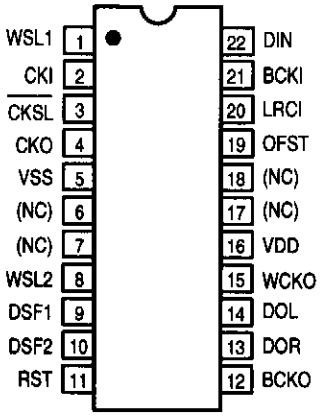

MC14577CP
(VI: 301~303, 308, 401, 402, 406, 409, 412, 416)
(DS: IC301)
NJM2068DDC
(Pr: IC509)
NJM5532DD
(PS: IC801)
NJM4556AD
(Pr: IC651)

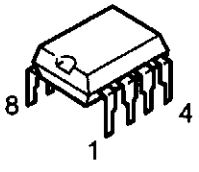

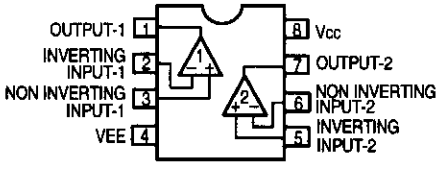

TC9274N-002(AU: IC110)

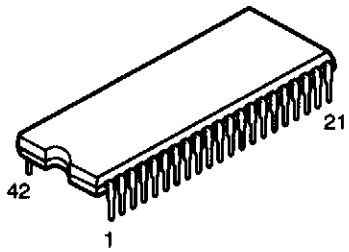

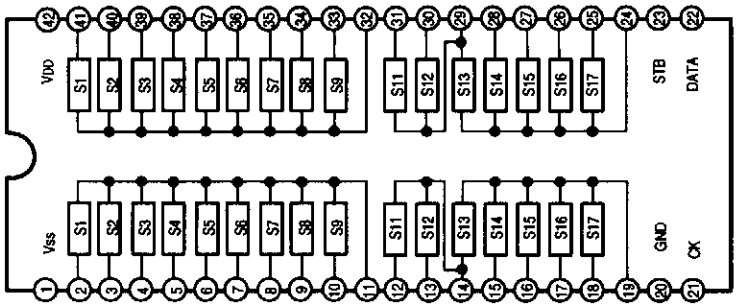

TC9299P
(AU: IC112)

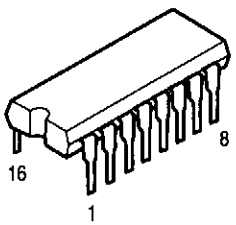

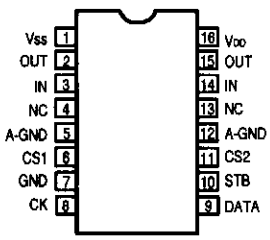

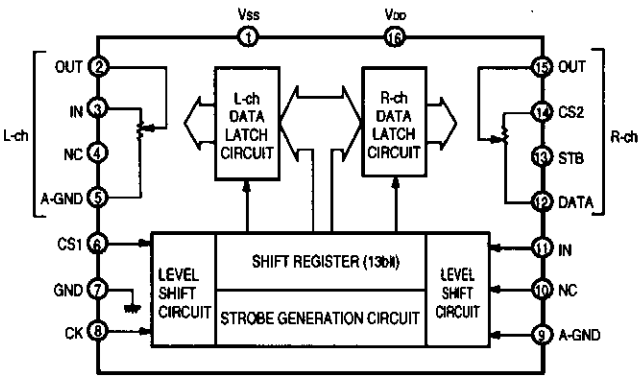

TC4051BP
(VI: 304, 305, 403, 404, 407, 408)

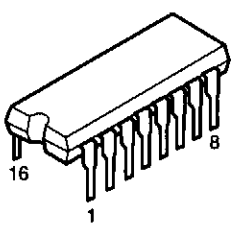

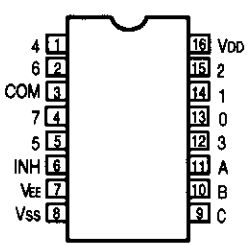

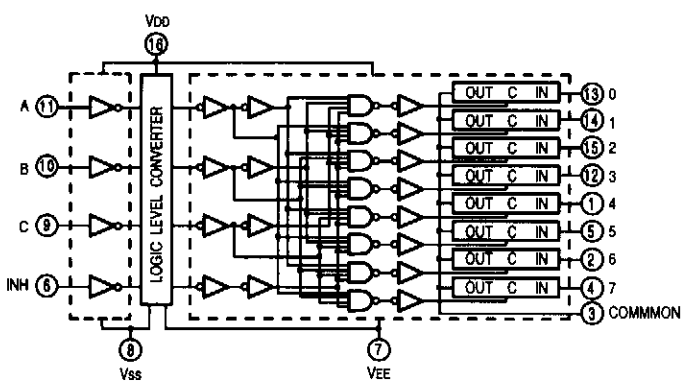

HD14066BP
(VI: IC306, 307, 405, 411)

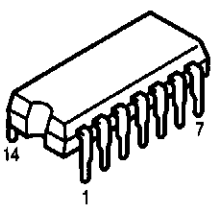

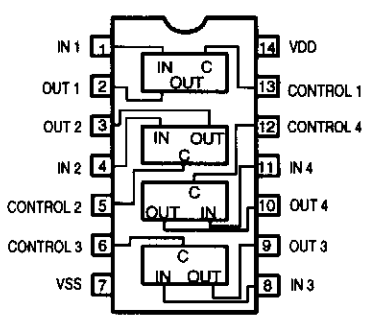

MC74HC4053N
(VI: IC413)

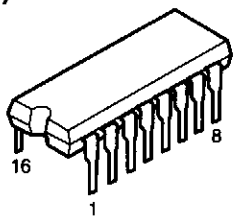

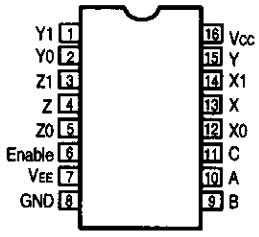

Control Inputs				
	Select			
Enable	C	B	A	ON Switches
L	L	L	L	Z0 Y0 X0
L	L	L	H	Z0 Y0 X1
L	L	H	L	Z0 Y1 X0
L	L	H	H	Z0 Y1 X1
L	H	L	L	Z1 Y0 X0
L	H	L	H	Z1 Y0 X1
L	H	H	L	Z1 Y1 X0
L	H	H	H	Z1 Y1 X1
H	X	X	X	None

X = Don't Care

NJM2229S (VI: IC415)

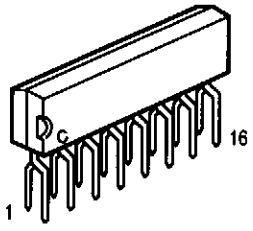

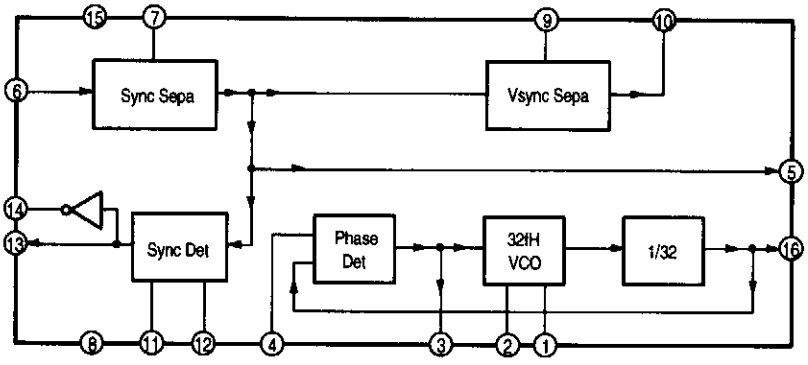

CX20106A
(DS: IC317)

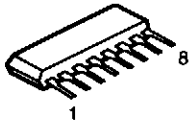

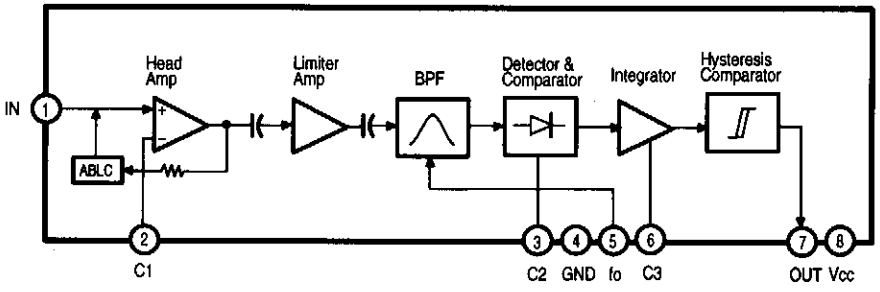

● IC PROTECTOR
ICP-N15 (AU: IC307) (PS: IC401)

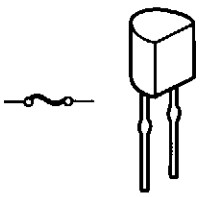

● OPTICAL
INPUT
GP1F32R
(DS: IC310)

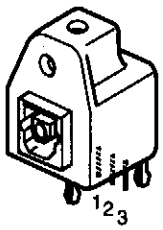

1. Vcc
2. GND
3. Vout

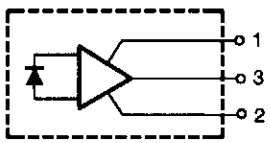

● OTHER
GP1U271X (Remote Control Sensor)
(Pr: IC461)

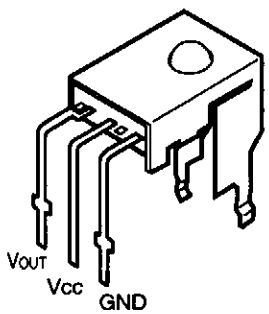

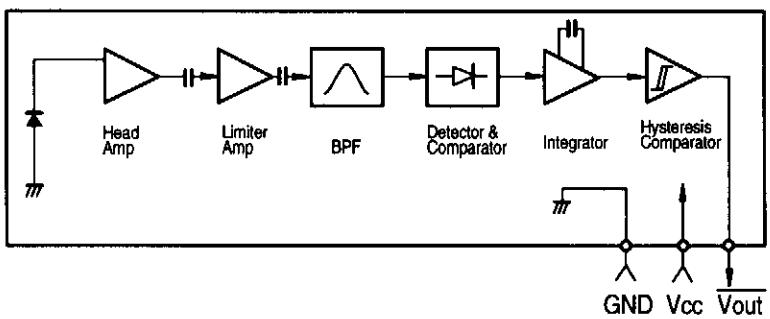

● TRANSISTORS

2SA970 (BL)
2SA988 (E/F)
2SC1815 (Y), (BL)
2SC2878 (A/B)

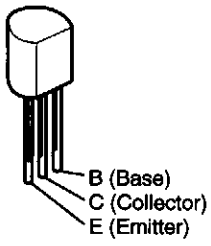

2SA1145 (O)/(Y)
2SB1041 (R)
2SC2705 (O)/(Y)
2SD1292 (R)

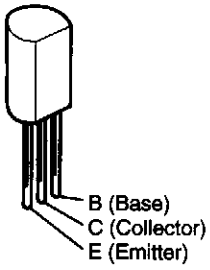

2SB1317 (s)
2SD1975 (s)

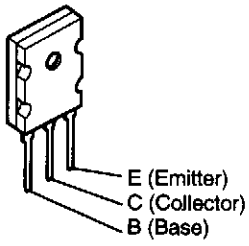

DTA114ES
DTC143ES
DTC144ES

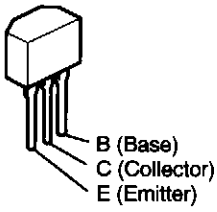

DTA114ES

PNP Type

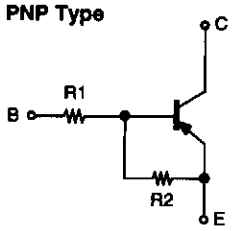

	R1	R2
DTA114ES	10kohm	10kohm

DTC143ES
DTC144ES

NPN Type

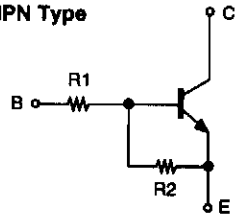

	R1	R2
DTC143ES	4.7kohm	4.7kohm
DTC144ES	47kohm	47kohm

DTA114EK
DTA124EK
DTA143EK
DTA144EK
DTC114EK
DTC144EK

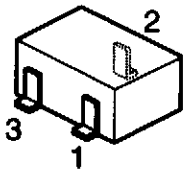

1: GND/Emitter
2: Out/Collector
3: In/Base

DTA114EK
DTA124EK
DTA143EK
DTA144EK

PNP Type

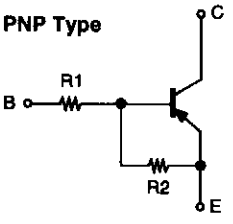

	R1	R2
DTA114EK	10kohm	10kohm
DTA124EK	22kohm	22kohm
DTA143EK	4.7kohm	4.7kohm
DTA144EK	47kohm	47kohm

DTC114EK
DTC144EK

NPN Type

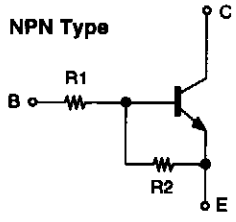

	R1	R2
DTC114EK	10kohm	10kohm
DTC144EK	47kohm	47kohm

2SA933S (S)
2SC1740S (E)

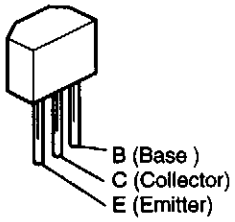

2SK184 (GR)/(BL)

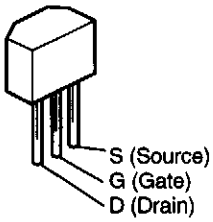

2SK209 (GR)

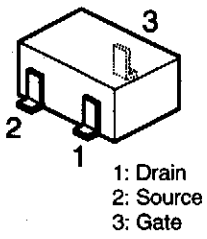

2SA1037K (S/R)
2SC2412K (S)

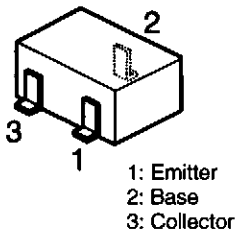

2SB1328 (P/Q)
2SD2004 (P/Q)

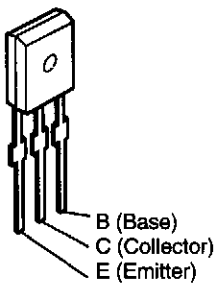

2SA1633F31

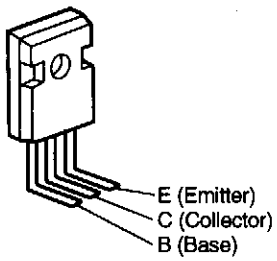

● DIODES (included LED)

1SS270A
1S2076A

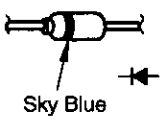

MTZJ3.3A MTZJ36A
MTZJ6.2A HZS5A-1
MTZJ7.5A HZS7C-1
MTZJ9.1A HZS12A-1

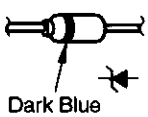

1SR35-200A

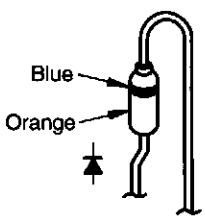

DSM1D2 (Type 3)

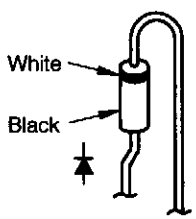

KV1851-TL
(DS: CD301)

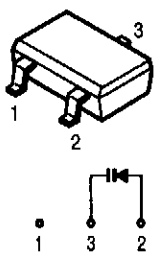

4D4B42(LC1)
(PS: D901)

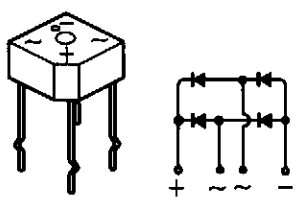

MA151A
(DS: D001~003)

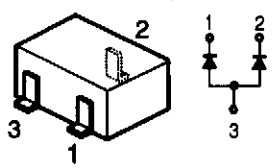

SEL1210S (Red)
(VI: LD101~108,111)
SEL4214S
(Pr: LD461)

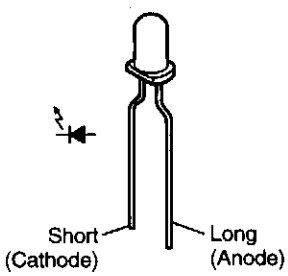

SML1216W
(VI: LD109, 110)

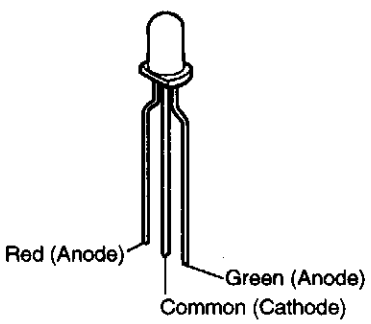

S10VB20F9 (D450)

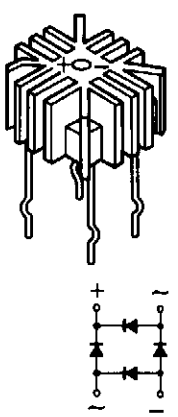

● DISPLAY

FL DISPLAY FIP16FM7R (Part No.: 3934156001) (VI: FL101)

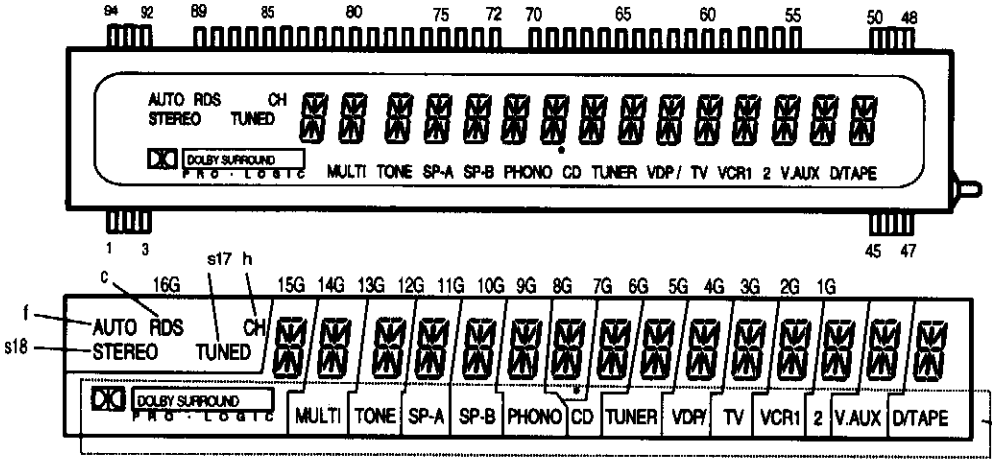

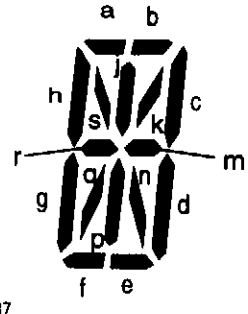

(UPPER)

TERMINAL No.	94	93	92	91	90	89	88	87	86	85	84	83	82	81					
ELECTRODE	F1	F1	F1	NP	NP	P a	P b	P c	P j	P k	P s	P h	P r	P m					
TERMINAL No.	80	79	78	77	76	75	74	73	72	71	70	69	68	67	66	65	64	63	62	61
ELECTRODE	P d	P n	P q	P p	P g	P f	P e	P s17	P s18	NP	16G	15G	14G	13G	12G	11G	10G	9G	8G	7G
TERMINAL No.								60	59	58	57	56	55	54	53	52	51	50	49	48
ELECTRODE								6G	5G	4G	3G	2G	1G	NP	NP	NP	NP	F2	F2	F2

(LOWER)

TERMINAL No.								35	36	37	38	39	40	41	42	43	44	45	46	47
ELECTRODE								NP	NP	NP	NP	NP	NP	NP	NP	NP	NP	F2	F2	F2
TERMINAL No.	15	16	17	18	19	20	21	22	23	24	25	26	27	28	29	30	31	32	33	34
ELECTRODE	NP	NP	NP	NP	NP	NP	NP	NP	NP	NP	NP	NP	NP	NP	NP	NP	NP	NP	NP	NP
TERMINAL No.	1	2	3	4	5	6	7	8	9	10	11	12	13	14						
ELECTRODE	F1	F1	F1	NP	NP	NP	NP	NP	NP	NP	NP	NP	NP	NP						

Notes: F: Filament G: Grid A: Anode NP: No Pin

LB-303VA
(VI: LD114)



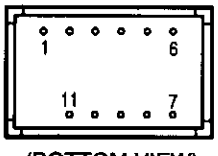

(BOTTOM VIEW)

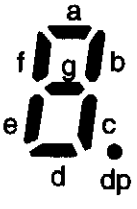

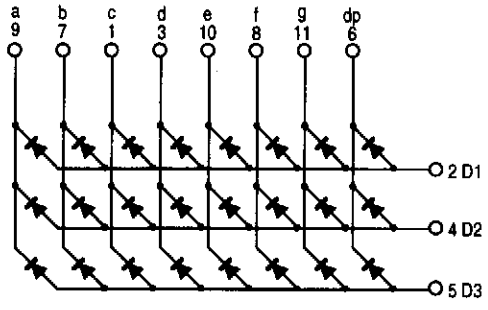

Pin connection

Pin No.	Function
1	c Segment cathode
2	Digit 1 common anode
3	d Segment cathode
4	Digit 2 common anode
5	Digit 3 common anode
6	D.P cathode
7	b Segment cathode
8	f Segment cathode
9	a Segment cathode
10	e Segment cathode
11	g Segment cathode

NOTE FOR PARTS LIST

- Part indicated with the mark "⊙" are not always in stock and possibly to take a long period of time for supplying, or in some case supplying of part may be refused.
- When ordering of part, clearly indicate "1" and "I" (i) to avoid mis-supplying.
- Ordering part without stating its part number can not be supplied.
- Part indicated with the mark "★" is not illustrated in the exploded view.
- Not including Carbon Film ±5%, 1/4W Type in the P.W.Board parts list. (Refer to the Schematic Diagram for those parts.)

WARNING:
Parts marked with this symbol ⚠ ■ have critical characteristics.
Use ONLY replacement parts recommended by the manufacturer.

● Resistors

Ex.: RN 14K 2E 182 G FR

Type	Shape and performance	Power	Resistance	Allowable error	Others
RD : Carbon RC : Composition RS : Metal oxide film RW : Winding RN : Metal film RK : Metal mixture		2B : 1/8W 2E : 1/4W 2H : 1/2W 3A : 1W 3D : 2W 3F : 3W 3H : 5W		F : ±1% G : ±2% J : ±5% K : ±10% M : ±20%	P : Pulse-resistant type NL : Low noise type NB : Non-burning type FR : Fuse-resistor F : Lead wire forming

*** Resistance**

1 8 2 ⇒ 1800 ohm = 1.8 kohm
Indicates number of zeros after effective number.
2-digit effective number.
• Units: ohm

1 R 2 ⇒ 1.2 ohm
1-digit effective number.
2-digit effective number, decimal point indicated by R.
• Units: ohm

● Capacitors

Ex.: CE 04W 1H 2B2 M BP

Type	Shape and performance	Dielectric strength	Capacity	Allowable error	Others
CE : Aluminum foil electrolytic CA : Aluminum solid electrolytic CS : Tantalum electrolytic CQ : Film CK : Ceramic CC : Ceramic CP : Oil CM : Mica CF : Metallized CH : Metallized		0J : 6.3V 1A : 10V 1C : 16V 1E : 25V 1V : 35V 1H : 50V 2A : 100V 2B : 125V 2C : 160V 2D : 200V 2E : 250V 2H : 500V 2J : 630V		F : ±1% G : ±2% J : ±5% K : ±10% M : ±20% Z : +80% −20% P : +100% −0% C : ±0.25pF D : ±0.5pF = : Others	HS : High stability type BP : Non-polar type HR : Ripple-resistant type DL : For change and discharge HF : For assuring high frequency U : UL part C : CSA part W : UL-CSA type F : Lead wire forming

*** Capacity (electrolyte only)**

2 2 2 ⇒ 2200μF
Indicates number of zeros after effective number.
2-digit effective number.
• Units: μF.

2 R 2 ⇒ 2.2μF
1-digit effective number.
2-digit effective number, decimal point indicated by R.
• Units: μF.

*** Capacity (except electrolyte)**

2 2 2 ⇒ 2200pF=0.0022μF
(More than 2) — Indicates number of zeros after effective number.
2-digit effective number.
• Units: pF.

2 2 1 ⇒ 220pF
(0 or 1) — Indicates number of zeros after effective number.
2-digit effective number.
• Units: pF.

• When the dielectric strength is indicated in AC, "AC" is included after the dieelectric strength value.

PARTS LIST OF P.W.B. UNIT ASS'Y

1U-2944 POWER AMP.-2 UNIT ASS'Y

Ref. No.	Part No.	Part Name	Remarks
SEMICONDUCTORS GROUP			
TR301,302	271 0094 919	Transistor 2SA970(BL)	
TR303,304	273 0281 906	Transistor 2SC2705 (O)/(Y)	
TR306	273 0281 906	Transistor 2SC2705 (O)/(Y)	
TR307	271 0168 900	Transistor 2SA1145 (O)/(Y)	
TR308	273 0198 002	Transistor 2SC1815 (Y)	
TR309	274 0151 916	Transistor 2SD2004 (P/Q)	
TR310	272 0107 919	Transistor 2SB1328 (P/Q)	
D301	276 0432 903	Diode 1SS270A	
D302,303	276 0049 914	Diode1S2076A	
ZD301,302	276 0473 904	Zener diode HZS12A-1TD	
RESISTORS GROUP			
R304	244 2052 999	Metal oxide 10 kohm 1W	RS14B3A103JNB(S)
R306,307	241 2380 963	Carbon film 2.2 kohm 1/4W(NB)	RD14B2E222JNBS
R312	241 2377 905	Carbon film 68 ohm 1/4W(NB)	RD14B2E680JNBS
R317	241 2377 976	Carbon film 130 ohm 1/4W(NB)	RD14B2E131JNBS
R318	241 2377 976	Carbon film 130 ohm 1/4W(NB)	RD14B2E131JNBS
R320	241 2378 920	Carbon film 220 ohm 1/4W(NB)	RD14B2E221JNBS
VR301	211 6095 965	Semi fixed resistor 4.7 kohm	V06QB472
CAPACITORS GROUP			
C301	254 4261 918	Electrolytic 47 µF/50V	CE04W1H470M
C302	253 1179 987	Ceramic 470 pF/50V	CK45B1H471K
C303	253 1179 945	Ceramic 220 pF/50V	CK45B1H221K
C304	255 1264 982	Mylar film 4700 pF/50V	CQ93M1H472J(B)
C305	254 4258 769	Electrolytic 220 µF/35V	CE04W1V221MC
C306	254 4256 774	Electrolytic 470 µF/25V	CE04W1E471M
C307	253 4488 905	Ceramic 56 pF/500V	CC45SL2H560J
C309	253 4470 900	Ceramic 10 pF/500V	CC45SL2H100D
C310	255 1265 936	Mylar film 0.01 µF/50V	CQ93M1H103J(B)
C313	254 4256 952	Electrolytic 220 µF/25V	CE04W1E221M
C314	253 1128 909	Ceramic 220 pF/500V	CK45B2H221K
C315,316	255 4235 934	Polypropylene film 0.01 µF/100V	CQ93P2A103J(NH)

OTHER PARTS GROUP				Q'ty
CN301	205 0731 042	4P connector base-L(9131)		1
CN303	205 0731 055	5P connector base-L(9131)		1
	415 0309 055	P.V.C. Tube (L=07)		10

1U-2948 AUDIO IN UNIT ASS'Y

Ref. No.	Part No.	Part Name	Remarks
SEMICONDUCTORS GROUP			
IC101	263 0896 909	IC NJM2068MD	
IC102,103	263 0898 907	IC NJM5532MD	
IC104~109	263 0615 902	IC BA15218F	
IC110	262 2219 002	IC TC9274N-002	
IC111	262 2033 000	IC TC9273N-004	
IC112	262 2031 002	IC TC9299P	
IC113	263 0896 909	IC NJM2068MD	
IC114	263 0898 907	IC NJM5532MD	
IC501,502	263 0896 909	IC NJM2068MD	
IC503,504	262 2214 007	IC LC7536	
IC505~508	263 0896 909	IC NJM2068MD	
IC601~604	263 0898 907	IC NJM5532MD	
IC605	262 1853 100	IC NJU7313AL	
TR313	269 0082 902	Transistor DTC114EK	
RESISTORS GROUP (Not included carbon film ±5% 1/4W)			
R101,102	247 0006 946	Carbon chip 390 ohm 1/10W	RM73B--391J
R103,104	247 0011 986	Carbon chip 68 kohm 1/10W	RM73B--683J
R105,106	247 0012 969	Carbon chip 150 kohm 1/10W	RM73B--154J
R107,108	247 0004 922	Carbon chip 47 ohm 1/10W	RM73B--470J
R109,110	247 0005 992	Carbon chip 240 ohm 1/10W	RM73B--241J
R111,112	247 0012 956	Carbon chip 130 kohm 1/10W	RM73B--134J
R113,114	247 0009 998	Carbon chip 11 kohm 1/10W	RM73B--113J
R115,116	247 0003 949	Carbon chip 22 ohm 1/10W	RM73B--220J
R117,118	247 0005 905	Carbon chip 100 ohm 1/10W	RM73B--101J
R119,120	247 0011 944	Carbon chip 47 kohm 1/10W	RM73B--473J
R121,122	247 0011 973	Carbon chip 62 kohm 1/10W	RM73B--623J
R131,132	247 0011 973	Carbon chip 62 kohm 1/10W	RM73B--623J
R123,124	247 0013 984	Carbon chip 470 kohm 1/10W	RM73B--474J
R125,126	247 0006 962	Carbon chip 470 ohm 1/10W	RM73B--471J
R127,128	247 0005 905	Carbon chip 100 ohm 1/10W	RM73B--101J
R129,130	247 0011 944	Carbon chip 470 kohm 1/10W	RM73B--473J
R131,132	247 0011 973	Carbon chip 62 kohm 1/10W	RM73B--623J
R133,134	247 0013 984	Carbon chip 470 kohm 1/10W	RM73B--474J
R135,136	247 0006 962	Carbon chip 470 ohm 1/10W	RM73B--471J
R137,138	247 0005 905	Carbon chip 100 ohm 1/10W	RM73B--101J
R139,140	247 0011 944	Carbon chip 47 kohm 1/10W	RM73B--473J
R141,142	247 0011 973	Carbon chip 62 kohm 1/10W	RM73B--623J
R143,144	247 0013 984	Carbon chip 470 kohm 1/10W	RM73B--474J
R145,146	247 0006 962	Carbon chip 470 ohm 1/10W	RM73B--471J
R147,148	247 0005 905	Carbon chip 100 ohm 1/10W	RM73B--101J
R149,150	247 0011 944	Carbon chip 47 kohm 1/10W	RM73B--473J
R151,152	247 0011 973	Carbon chip 62 kohm 1/10W	RM73B--623J
R153,154	247 0013 984	Carbon chip 470 kohm 1/10W	RM73B--474J
R155,156	247 0006 962	Carbon chip 470 ohm 1/10W	RM73B--471J
R157,158	247 0005 905	Carbon chip 100 ohm 1/10W	RM73B--101J
R159,160	247 0011 944	Carbon chip 47 kohm 1/10W	RM73B--473J

Ref. No.	Part No.	Part Name	Remarks
R161,162	247 0011 973	Carbon chip 62 kohm 1/10W	RM73B--623J
R163,164	247 0013 984	Carbon chip 470 kohm 1/10W	RM73B--474J
R165,166	247 0006 962	Carbon chip 470 ohm 1/10W	RM73B--471J
R167,168	247 0005 905	Carbon chip 100 ohm 1/10W	RM73B--101J
R169,170	247 0011 944	Carbon chip 47 kohm 1/10W	RM73B--473J
R171,172	247 0011 973	Carbon chip 62 kohm 1/10W	RM73B--623J
R173,174	247 0013 984	Carbon chip 470 kohm 1/10W	RM73B--474J
R175,176	247 0006 962	Carbon chip 470 ohm 1/10W	RM73B--471J
R177,178	247 0005 905	Carbon chip 100 ohm 1/10W	RM73B--101J
R179,180	247 0011 944	Carbon chip 47 kohm 1/10W	RM73B--473J
R181,182	247 0011 973	Carbon chip 62 kohm 1/10W	RM73B--623J
R183,184	247 0013 984	Carbon chip 470 kohm 1/10W	RM73B--474J
R185,186	247 0006 962	Carbon chip 470 ohm 1/10W	RM73B--471J
R187,188	247 0005 905	Carbon chip 100 ohm 1/10W	RM73B--101J
R189,190	247 0011 944	Carbon chip 47 kohm 1/10W	RM73B--473J
R191,192	247 0011 973	Carbon chip 62 kohm 1/10W	RM73B--623J
R193,194	247 0013 984	Carbon chip 470 kohm 1/10W	RM73B--474J
R195,196	247 0006 962	Carbon chip 470 ohm 1/10W	RM73B--471J
R197,198	247 0005 905	Carbon chip 100 ohm 1/10W	RM73B--101J
R199,200	247 0011 944	Carbon chip 47 kohm 1/10W	RM73B--473J
R201,202	247 0012 927	Carbon chip 100 kohm 1/10W	RM73B--104J
R203,204	247 0005 905	Carbon chip100 ohm 1/10W	RM73B--101J
R205~210	247 0010 916	Carbon chip 13 kohm 1/10W	RM73B--133J
R211,212	247 0012 927	Carbon chip 100 kohm 1/10W	RM73B--104J
R213,214	247 0012 901	Carbon chip 82 kohm 1/10W	RM73B--823J
R215,216	247 0005 905	Carbon chip 100 ohm 1/10W	RM73B--101J
R217,218	247 0007 945	Carbon chip 1 kohm 1/10W	RM73B--102J
R219,220	247 0007 903	Carbon chip 680 ohm 1/10W	RM73B--681J
R221~224	247 0005 905	Carbon chip 100 ohm 1/10W	RM73B--101J
R225,226	247 0012 927	Carbon chip 100 kohm 1/10W	RM73B--104J
R227,228	247 0009 901	Carbon chip 4.7 kohm 1/10W	RM73B--472J
R355	247 0006 946	Carbon chip 390 ohm 1/10W	RM73B--391T
R501,502	247 0012 927	Carbon chip 100 kohm 1/10W	RM73B--104J
R503-506	247 0008 902	Carbon chip 1.8 kohm 1/10W	RM73B--182J
R507,508	247 0008 973	Carbon chip 3.6 kohm 1/10W	RM73B--362J
R509,510	247 0004 922	Carbon chip 47 ohm 1/10W	RM73B--470J
R511~516	247 0008 902	Carbon chip 1.8 kohm 1/10W	RM73B--182J
R517,518	247 0004 922	Carbon chip 47 ohm 1/10W	RM73B--470J
R519~522	247 0011 944	Carbon chip 47 kohm 1/10W	RM73B--473J
R523,524	247 0013 984	Carbon chip 470 kohm 1/10W	RM73B--474J
R525,526	247 0005 905	Carbon chip 100 ohm 1/10W	RM73B--101J
R527,528	247 0011 944	Carbon chip 47 kohm 1/10W	RM73B--473J
R529,530	247 0013 984	Carbon chip 470 kohm 1/10W	RM73B--474J
R531,532	247 0005 905	Carbon chip 100 ohm 1/10W	RM73B--101J
R533,534	247 0011 944	Carbon chip 47 kohm 1/10W	RM73B--473J
R535~538	247 0012 927	Carbon chip 100 kohm 1/10W	RM73B--104J
R539~542	247 0005 905	Carbon chip 100 ohm 1/10W	RM73B--101J
R601,602	247 0011 973	Carbon chip 62 kohm 1/10W	RM73B--623J

Ref. No.	Part No.	Part Name	Remarks
R603,604	247 0013 984	Carbon chip 470 kohm 1/10W	RM73B--474J
R605,606	247 0006 962	Carbon chip 470 ohm 1/10W	RM73B--471J
R609~612	247 0018 905	Carbon chip 0 ohm 1/10W	RM73B--0R0K
R613,614	247 0011 944	Carbon chip 47 kohm 1/10W	RM73B--473J
R615,616	247 0011 973	Carbon chip 62 kohm 1/10W	RM73B--623J
R617,618	247 0013 984	Carbon chip 470 kohm 1/10W	RM73B--474J
R619,620	247 0006 962	Carbon chip 470 ohm 1/10W	RM73B--471J
R623~626	247 0018 905	Carbon chip 0 ohm 1/10W	RM73B--0R0K
R627,628	247 0011 944	Carbon chip 47 kohm 1/10W	RM73B--473J
R629,630	247 0011 973	Carbon chip 62 kohm 1/10W	RM73B--623J
R631,632	247 0013 984	Carbon chip 470 kohm 1/10W	RM73B--474J
R633,634	247 0006 962	Carbon chip 470 ohm 1/10W	RM73B--471J
R637~640	247 0018 905	Carbon chip 0 ohm 1/10W	RM73B--0R0K
R641,642	247 0011 944	Carbon chip 47 kohm 1/10W	RM73B--473J
R643,644	247 0011 973	Carbon chip 62 kohm 1/10W	RM73B--623J
R645,646	247 0013 984	Carbon chip 470 kohm 1/10W	RM73B--474J
R647,648	247 0006 962	Carbon chip 470 ohm 1/10W	RM73B--471J
R649,650	247 0005 905	Carbon chip 100 ohm 1/10W	RM73B--101J
R651,652	247 0011 944	Carbon chip 47 kohm 1/10W	RM73B--473J

CAPACITORS GROUP

C101,102	257 0005 944	Ceramic chip 220 pF/50V	CC73SL1H221J
C105,106	254 4254 909	Electrolytic 10 µF/16V	CE04W1C100M
C107,108	257 0004 961	Ceramic chip 100 pF/50V	CC73SL1H101J
C109,110	254 4250 932	Electrolytic 220 µF/6.3V	CE04W0J221M
C111,112	255 4199 999	Mylar film 0.024 µF/50V	CQ92M1H243J(MRZ)
C113,114	255 1265 907	Mylar film 6800 pF/50V	CQ93M1H682J(B)
C115,116	254 4254 938	Electrolytic 47 µF/16V	CE04W1C470M
C117,118	257 0012 982	Ceramic chip 0.022 µF/50V	CK73F1H223Z
C119,120	257 0005 986	Ceramic chip 330 pF/50V	CC73SL1H331J
C121,122	254 4260 980	Electrolytic 10 µF/50V	CE04W1H100M
C123~126	257 0004 961	Ceramic chip 100 pF/50V	CC73SL1H101J
C127,128	254 4261 918	Electrolytic 47 µF/50V	CE04W1H470M
C129,130	254 4260 948	Electrolytic 1 µF/50V	CE04W1H010M
C131,132	257 0005 986	Ceramic chip 330 pF/50V	CC73SL1H331J
C133,134	254 4254 909	Electrolytic 10 µF/16V	CE04W1C100M
C135~138	257 0004 961	Ceramic chip 100 pF/50V	CC73SL1H101J
C139.140	254 4254 938	Electrolytic 47 µF/16V	CE04W1C470M
C141,142	257 0012 982	Ceramic 0.022 µF/50V	CK73F1H223Z
C143,144	257 0005 986	Ceramic chip 330 pF/50V	CC73SL1H331J
C145,146	254 4254 909	Electrolytic 10 µF/16V	CE04W1C100M
C147~150	257 0004 961	Ceramic chip 100 pF/50V	CC73SL1H101J
C151,152	254 4254 938	Electrolytic 47 µF/16V	CE04W1C470M
C153,154	254 4260 948	Electrolytic 1 µF/50V	CE04W1H010M
C155,156	257 0005 986	Ceramic chip 330 pF/50V	CC73SL1H331J
C157,158	254 4254 909	Electrolytic 10 µF/16V	CE04W1C100M
C159~162	257 0004 961	Ceramic chip 100 pF/50V	CC73SL1H101J
C163,164	254 4254 938	Electrolytic 47 µF/16V	CE04W1C470M
C165,166	257 0012 982	Ceramic chip 0.022 µF/50V	CK73F1H223Z
C167,168	257 0005 986	Ceramic chip 330 pF/50V	CC73SL1H331J
C169,170	254 4254 909	Electrolytic 10 µF/16V	CE04W1C100M

Ref. No.	Part No.	Part Name	Remarks
C171~174	257 0004 961	Ceramic chip 100 pF/50V	CC73SL1H101J
C175,176	254 4254 938	Electrolytic 47 µF/16V	CE04W1C470M
C177,178	254 4260 948	Electrolytic 1 µF/50V	CE04W1H010M
C179,180	257 0005 986	Ceramic chip 330 pF/50V	CC73SL1H331J
C181,182	254 4254 909	Electrolytic 10 µF/16V	CE04W1C100M
C183~186	257 0004 961	Ceramic chip 100 pF/50V	CC73SL1H101J
C187,188	254 4254 938	Electrolytic 47 µF/16V	CE04W1C470M
C189,190	257 0012 982	Ceramic 0.022 µF/50V	CK73F1H223Z
C191,192	257 0005 986	Ceramic chip 330 pF/50V	CC73SL1H331J
C193,194	254 4254 909	Electrolytic 10 µF/16V	CE04W1C100M
C195~198	257 0004 961	Ceramic chip 100 pF/50V	CC73SL1H101J
C199,200	254 4254 938	Electrolytic 47 µF/16V	CE04W1C470M
C201,202	254 4260 948	Electrolytic 1 µF/50V	CE04W1H010M
C203,204	257 0005 986	Ceramic chip 330 pF/50V	CC73SL1H331J
C205,206	254 4254 909	Electrolytic 10 µF/16V	CE04W1C100M
C207~210	257 0004 961	Ceramic chip 100 pF/50V	CC73SL1H101J
C211,212	254 4254 938	Electrolytic 47 µF/16V	CE04W1C470M
C213,214	257 0012 982	Ceramic chip 0.022 µF/50V	CK73F1H223Z
C215,216	254 4260 980	Electrolytic 10 µF/50V	CE04W1H100M
C217,218	254 4256 949	Electrolytic 100 µF/25V	CE04W1E101M
C221,222	254 4260 948	Electrolytic 1 µF/50V	CE04W1H010M
C225~228	256 1035 910	Metalized 0.22 µF/50V	CF93A1H224J
C229,230	254 4256 949	Electrolytic 100 µF/25V	CE04W1E101M
C231,232	254 4254 909	Electrolytic 10 µF/16V	CE04W1C100M
C233,234	257 0004 961	Ceramic chip 100 pF/50V	CC73SL1H101J
C236,237	254 4254 941	Electrolytic 100 µF/16V	CE04W1C101M
C240,241	254 4260 948	Electrolytic 1 µF/16V	CE04W1H010M
C242	254 4260 948	Electrolytic 1 µF/50V	CE04W1H010M
C247,248	254 4254 909	Electrolytic 10 µF/16V	CE04W1C100M
C249,250	254 4254 938	Electrolytic 47 µF/16V	CE04W1C470M
C501,502	253 4536 941	Ceramic 15 pF/50V	CC45SL1H150J
C503,504	253 4537 924	Ceramic 33 pF/50V	CC45SL1H330J
C505~508	254 4260 948	Electrolytic 1 µF/50V	CE04W1H010M
C509~512	254 4261 918	Electrolytic 47 µF/50V	CE04W1H470M
C513~516	257 0012 982	Ceramic chip 0.022 µF/50V	CK73F1H223Z
C517~524	254 4260 980	Electrolytic 10 µF/50V	CE04W1H100M
C527~530	254 4260 948	Electrolytic 1 µF/50V	CE04W1H010M
C531~534	254 4260 993	Electrolytic 22 µF/50V	CE04W1H220M
C535,536	257 0012 966	Ceramic chip 0.01 µF/50V	CK73F1H103Z
C601,602	257 0005 986	Ceramic chip 330 pF/50V	CC73SL1H331J
C603,604	254 4254 909	Electrolytic 10 µF/16V	CE04W1C100M
C605~608	257 0004 961	Ceramic chip 100 pF/50V	CC73SL1H101J
C609,610	254 4254 938	Electrolytic 47 µF/16V	CE04W1C470M
C611,612	254 4260 948	Electrolytic 1 µF/50V	CE04W1H010M
C613,614	257 0005 986	Ceramic chip 330 pF/50V	CC73SL1H331J
C615,616	254 4254 909	Electrolytic 10 µF/16V	CE04W1C100M
C617~620	257 0004 961	Ceramic chip 100 pF/50V	CC73SL1H101J
C621,622	254 4254 938	Electrolytic 47 µF/16V	CE04W1C470M
C623,624	254 4260 948	Electrolytic 1 µF/50V	CE04W1H010M
C625,626	257 0005 986	Ceramic chip 330 pF/50V	CC73SL1H331J
C627,628	254 4254 909	Electrolytic 10 µF/16V	CE04W1C100M
C629~632	257 0004 961	Ceramic chip 100 pF/50V	CC73SL1H101J
C633,634	254 4254 938	Electrolytic 47 µF/16V	CE04W1C470M
C635,636	254 4260 948	Electrolytic 1 µF/50V	CE04W1H010M
C637,638	257 0005 986	Ceramic chip 330 pF/50V	CC73SL1H331J
C639,640	254 4254 909	Electrolytic 10 µF/16V	CE04W1C100M
C641~644	257 0004 961	Ceramic chip 100 pF/50V	CC73SL1H101J
C645,646	254 4254 938	Electrolytic 47 µF/16V	CE04W1C470M
C649,650	257 0012 982	Ceramic 0.022 µF/50V	CK73F1H223Z

OTHER PARTS GROUP				Q'ty
JK101~103	204 8543 019	6P pin jack		3
JK601	204 8514 006	4P pin jack (S-GND)		1
JK602	204 8529 004	4P pin jack (SW)		1
W106	002 9022 069	10C R.wire Ass'y		1
LF101,102	235 9003 002	Low pass filter	FTZ choke coil	2
CN035	205 0133 035	3P NH connector base		1
CN049	205 0805 046	4P connector socket (9176)		1
CN063	205 0942 019	6P connector socket (TUC-P)		1
CN084	205 0986 046	8P connector plug (TKC-A)		1
CN089	205 0885 095	8P connector socket (TUC-P)		1
CN091	205 0885 037	9P connector socket (TUC-P)		1
CN099	205 0885 037	9P connector socket (TUC-P)		1
CN106	205 0409 002	10P DIP socket		1
CN109	205 0885 053	10P connector socket (TUC-P)		1
CN111	205 0885 066	11P connector socket (TUC-P)		1
CN121	205 0885 079	12P connector socket (TUC-P)		1
CN122	205 0480 021	12P KR connector base (L)		1
CN149	205 0885 011	14P connector socket (TUC-P)		1
CN942	205 0805 046	4P connector socket (9176)		1
	205 0885 082	4P connector socket (TUC-P)		1
	414 0799 109	Shield plate		1

1U-2949 PRE. AMP. UNIT ASS'Y

Ref. No.	Part No.	Part Name	Remarks
SEMICONDUCTORS GROUP			
IC403	263 0809 006	IC NJM7805FA(S)	
IC404	263 0554 005	IC NJM7905FA	
IC405	263 0812 006	IC NJM7815FA(S)	
IC406	263 0561 001	IC NJM7915FA	
IC461	499 0290 007	IC GP1U271X	
IC509	263 0609 002	IC NJM2068DDC	
IC601	262 2214 007	IC LC7536	
IC602	263 0896 909	IC NJM2068MD	
IC603	263 0898 907	IC NJM5532MD	
IC604	262 2214 007	IC LC7536	
IC605	263 0896 909	IC NJM2068MD	
IC606	263 0898 907	IC NJM5532MD	
IC651	263 0995 004	IC NJM4556AD	
IC751	262 2033 000	IC TC9273N-004	
TR461	269 0083 901	Transistor DTA114EK	
TR671	269 0018 905	Transistor DTC143ES(4.7K-4.7K)	
TR701-708	273 0253 918	Transistor 2SC2878(A/B)	
TR709-713	269 0083 901	Transistor DTA114EK	
TR714	269 0046 906	Transistor DTA114ES(10K-10K)	
TR715-720	273 0253 918	Transistor 2SC2878(A/B)	
D408	276 0548 910	Diode DSM1D2	
D412	276 0548 910	Diode DSM1D2	
D641	276 0553 905	Diode 1SR35-200A	
D671	276 0432 903	Diode 1SS270A	
D701	276 0432 903	Diode 1SS270A	
D704	276 0432 903	Diode 1SS270A	
D708	276 0432 903	Diode 1SS270A	
D709	276 0553 905	Diode 1SR35-200A	
LD461	393 9408 903	LED SEL-4214S	
RESISTORS GROUP (Not included carbon film ±5% 1/4W)			
R410,411	241 2387 908	Carbon film 1 ohm 1/4W (NB)	RD14B2E010JNBS
R451	247 0005 905	Carbon film 100 ohm 1/10W	RM73B--101J
R461	247 0006 933	Carbon film 360 ohm 1/10W	RM73B--361J
R463	247 0005 905	Carbon film 100 ohm 1/10W	RM73B--101J
R543-546	247 0008 960	Carbon film 3.3 kohm 1/10W	RM73B--332J
R547-550	247 0007 958	Carbon film 1.1 kohm 1/10W	RM73B--112J
R551,552	247 0005 905	Carbon film 100 ohm 1/10W	RM73B--101J

Ref. No.	Part No.	Part Name	Remarks
R601,602	247 0010 961	Carbon film 22 kohm 1/10W	RM73B--223J
R603,604	247 0013 900	Carbon film 220 kohm 1/10W	RM73B--224J
R605,606	247 0005 905	Carbon film 100 ohm 1/10W	RM73B--101J
R607,608	247 0011 944	Carbon film 47 kohm 1/10W	RM73B--473J
R609,610	247 0012 927	Carbon film 100 kohm 1/10W	RM73B--104J
R611,612	247 0005 905	Carbon film 100 ohm 1/10W	RM73B--101J
R613,614	247 0009 927	Carbon film 5.6 kohm 1/10W	RM73B--562J
R615,616	247 0007 916	Carbon film 750 ohm 1/10W	RM73B--751J
R617,618	247 0005 905	Carbon film 100 ohm 1/10W	RM73B--101J
R619,620	247 0012 927	Carbon film 100 kohm 1/10W	RM73B--104J
R621,622	247 0010 961	Carbon film 22 kohm 1/10W	RM73B--223J
R623,624	247 0013 900	Carbon film 220 kohm 1/10W	RM73B--224J
R625,626	247 0005 905	Carbon film 100 ohm 1/10W	RM73B--101J
R627,628	247 0011 944	Carbon film 47 kohm 1/10W	RM73B--473J
R629,630	247 0012 927	Carbon film 100 kohm 1/10W	RM73B--104JT
R631,632	247 0005 905	Carbon film 100 ohm 1/10W	RM73B--101J
R633,634	247 0009 927	Carbon film 5.6 kohm 1/10W	RM73B--562J
R635,636	247 0007 916	Carbon film 750 ohm 1/10W	RM73B--751J
R637,638	247 0005 905	Carbon film 100 ohm 1/10W	RM73B--101J
R639,640	247 0012 927	Carbon film 100 kohm 1/10W	RM73B--104J
R651,652	247 0013 984	Carbon film470 kohm 1/10W	RM73B--474J
R653,654	247 0005 905	Carbon film 100 ohm 1/10W	RM73B--101J
R655,656	247 0009 927	Carbon film 5.6 kohm 1/10W	RM73B--562J
R657,658	247 0007 945	Carbon film 1 kohm 1/10W	RM73B--102J
R659,660	244 2051 961	Metal oxide 100 ohm 1W	RS14B3A101JNBS(S)
R671	241 2379 974	Carbon film 910 ohm 1/4W (NB)	RD14B2E911JNBS
R701,702	247 0007 945	Carbon film 1 kohm 1/10W	RM73B--102J
R703,706	247 0012 927	Carbon film 100 kohm 1/10W	RM73B--104J
R707,708	247 0005 989	Carbon film 220 ohm 1/10W	RM73B--221J
R709,710	247 0006 962	Carbon film 470 ohm 1/10W	RM73B--471J
R711,714	247 0012 927	Carbon film 100 kohm 1/10W	RM73B--104J
R715,716	247 0005 989	Carbon film 220 ohm 1/10W	RM73B--221J
R717,718	247 0007 945	Carbon film 1 kohm 1/10W	RM73B--102J
R719,722	247 0012 927	Carbon film 100 kohm 1/10W	RM73B--104J
R723,724	247 0005 989	Carbon film 220 ohm 1/10W	RM73B--221J
R725,726	247 0007 945	Carbon film 1 kohm 1/10W	RM73B--102J
R727,730	247 0012 927	Carbon film 100 kohm 1/10W	RM73B--104J
R731,732	247 0005 989	Carbon film 220 ohm 1/10W	RM73B--221J
R733,734	247 0011 944	Carbon film 47 kohm 1/10W	RM73B--473J
R735-740	247 0010 961	Carbon film 22 kohm 1/10W	RM73B--223J
R741-745	247 0009 985	Carbon film 10 kohm 1/10W	RM73B--103J
R751,752	247 0006 962	Carbon film 470 ohm 1/10W	RM73B--471J
R753,754	247 0015 966	Carbon film 2.7 Mohm 1/10W	RM73B--275J
R755,756	247 0006 962	Carbon film 470 ohm 1/10W	RM73B--471J
R757,758	247 0015 966	Carbon film 2.7 Mohm 1/10W	RM73B--275J
R759,760	247 0006 962	Carbon film 470 ohm 1/10W	RM73B--471J
R761,762	247 0015 966	Carbon film 2.7 Mohm 1/10W	RM73B--275J
R763,764	247 0006 962	Carbon film 470 ohm 1/10W	RM73B--471J
R765,766	247 0015 966	Carbon film 2.7 Mohm 1/10W	RM73B--275J
R767-772	247 0009 985	Carbon film 10 kohm 1/10W	RM73B--103J
R773	247 0007 945	Carbon film 1 kohm 1/10W	RM73B--102J

Ref. No.	Part No.	Part Name	Remarks
CAPACITORS GROUP			
C411,412	256 1034 979	Metalized 0.1 µF/50V	CF93A1H104J
C413,414	254 4259 700	Electrolytic 2200 µF/35V	CE04W1V222MC
C415~418	257 0012 966	Ceramic chip 0.01 µF/50V	CK73F1H103Z
C419,420	254 4258 947	Electrolytic 47 µF/35V	CE04W1V470M
C421,422	256 1034 979	Metalized 0.1 µF/50V	CF93A1H104J
C423,424	254 4259 700	Electrolytic 2200 µF/35V	CE04W1V222MC
C425~428	257 0012 966	Ceramic chip 0.01 µF/50V	CK73F1H103Z
C429,430	254 4258 947	Electrolytic 47 µF/35V	CE04W1V470M
C431	254 4260 948	Electrolytic 1 µF/50V	CE04W1H010M
C451	257 0012 966	Ceramic chip 0.01 µF/50V	CK73F1H103Z
C452	254 4260 948	Electrolytic 1 µF/50V	CE04W1H010M
C453	257 0012 966	Ceramic chip 0.01 µF/50V	CK73F1H103Z
C461	257 0014 935	Ceramic chip 0.1 µF/25V	CK73F1E104Z
C462	254 4260 948	Electrolytic 1 µF/50V	CE04W1H010M
C478	257 0012 966	Ceramic chip 0.01 µF/50V	CK73F1H103Z
C479,480	257 0007 900	Ceramic chip1000 pF/50V	CC73SL1H102J
C535~538	255 4201 968	Mylar film 470 pF/50V	CQ93P1H471J
C539,540	254 4260 948	Electrolytic 1 µF/50V	CE04W1H010M
C601,602	257 0012 982	Ceramic chip 0.022 µF/50V	CK73F1H223Z
C603~606	254 4254 909	Electrolytic 10 µF/16V	CE04W1C100M
C608	257 0012 966	Ceramic chip 0.01 µF/50V	CK73F1H103Z
C609,610	254 4260 948	Electrolytic 1 µF/50V	CE04W1H010M
C611,612	254 4254 909	Electrolytic 10 µF/16V	CE04W1C100M
C613~616	257 0004 961	Ceramic chip 100 pF/50V	CC73SL1H101J
C619,620	257 0012 982	Ceramic chip 0.022 µF/50V	CK73F1H223Z
C621~624	254 4254 909	Electrolytic 10 µF/16V	CE04W1C100M
C626	257 0012 966	Ceramic chip 0.01 µF/50V	CK73F1H103Z
C627,628	254 4260 948	Electrolytic 1 µF/50V	CE04W1H010M
C629,630	254 4254 909	Electrolytic 10 µF/16V	CE04W1C100M
C631~634	257 0004 961	Ceramic chip100 pF/50V	CC73SL1H101J
C637~640	257 0004 961	Ceramic chip100 pF/50V	CC73SL1H101J
C641~644	254 4260 948	Electrolytic 1 µF/50V	CE04W1H010M
C645,646	254 4258 785	Electrolytic 470 µF/35V	CE04W1V471MC
C649	254 4260 948	Electrolytic 1 µF/50V	CE04W1H010M
C651,652	254 4260 948	Electrolytic 1 µF/50V	CE04W1H010M
C653,654	254 4254 909	Electrolytic 10 µF/16V	CE04W1C100M
C655,656	257 0004 961	Ceramic chip100 pF/50V	CC73SL1H101J
C657,658	254 4254 909	Electrolytic 10 µF/16V	CE04W1C100M
C671	254 4260 948	Electrolytic 1 µF/50V	CE04W1H010M
C690	253 8014 702	Ceramic chip 0.01 µF/400V	CK45F2GAC103MC
C691~694	254 4254 909	Electrolytic 10 µF/16V	CE04W1C100M
C701,702	254 4254 909	Electrolytic 10 µF/16V	CE04W1C100M
C703,704	257 0004 961	Ceramic chip100 pF/50V	CC73SL1H101J
C705,706	254 4254 909	Electrolytic 10 µF/16V	CE04W1C100M
C707,708	257 0004 961	Ceramic chip100 pF/50V	CC73SL1H101J
C709,710	254 4254 909	Electrolytic 10 µF/16V	CE04W1C100M
C711,712	257 0004 961	Ceramic chip100 pF/50V	CC73SL1H101J
C713,714	254 4254 909	Electrolytic 10 µF/16V	CE04W1C100M
C715,716	257 0004 961	Ceramic chip100 pF/50V	CC73SL1H101J
C717	254 4260 948	Electrolytic 1 µF/50V	CE04W1H010M
C718	257 0012 966	Ceramic chip 0.01 µF/50V	CK73F1H103Z
C719	254 4260 948	Electrolytic 1 µF/50V	CE04W1H010M
C720	257 0012 966	Ceramic chip 0.01 µF/50V	CK73F1H103Z
C721	254 4260 948	Electrolytic 1 µF/50V	CE04W1H010M
C724,725	254 4260 948	Electrolytic 1 µF/50V	CE04W1H010M
C727~734	254 4254 909	Electrolytic 10 µF/16V	CE04W1C100M
C751~758	257 0004 961	Ceramic chip100 pF/50V	CC73SL1H101J
C759	254 4260 948	Electrolytic 1 µF/50V	CE04W1H010M
C760	257 0012 966	Ceramic chip 0.01 µF/50V	CK73F1H103Z
C761	254 4260 948	Electrolytic 1 µF/50V	CE04W1H010M
C762	257 0012 966	Ceramic chip 0.01 µF/50V	CK73F1H103Z
C763,764	257 0012 982	Ceramic chip 0.022 µF/50V	CK73F1H223Z
C766	254 4252 778	Electrolytic 1000 µF/10V	CE04W1A102MC
C767	254 3056 917	Electrolytic 1 µF/50V	CE04D1H010MBP
	253 1148 905	Ceramic 0.022 µF/50V	CK45F1H223Z

Ref. No.	Part No.	Part Name	Remarks	Q'ty
OTHER PARTS GROUP				
CN044	205 0885 082	4P connector socket (TUC-P)		1
CN045	205 0355 046	4P KR connector base (L)		1
CN049	205 1028 000	4P connector base (9176)		1
CN056	203 8207 077	5P KR-DA connector cord		1
CN058	205 0233 058	5P EH connector base		1
CN059	205 0985 034	5P connector socket (TKC-A)		1
CN059	205 0986 033	5P connector plug (TKC-A)		1
CN061	205 0942 019	6P connector socket (TUC-P)		1
CN081	205 0885 095	8P connector socket (TUC-P)		1
CN083	205 0885 095	8P connector socket (TUC-P)		1
CN084	205 0985 005	8P connector socket (TKC-A)		1
CN086	205 0885 095	8P connector socket (TUC-P)		1
CN093	205 0343 090	9P connector base (KR-PH)		1
CN094	205 0355 091	9P KR connector base (L)		1
CN113	205 0885 066	11P connector socket (TUC-P)		1
CN133	205 0480 034	13P KR connector base (L)		1
CN142	205 0885 011	14P connector socket (TUC-P)		1
CN921	205 0581 001	2P VH connector base		1
CN931	205 0087 039	3P wrapping terminal		1
CN932	203 5012 061	3P SAN-PH connector cord		1
CN933	205 0348 037	3P wrapping terminal		1
CN942	205 1028 000	4P connector base (9176)		1
F004,005	202 0040 909	Fuse clip		2
F015,016	202 0040 909	Fuse clip		2
F004,005	206 1015 029	Fuse 1A	Europe/Asia model	2
F004,005	206 1039 034	Fuse 1A	Taiwan model	2
F015,016	206 1015 061	Fuse 2A	Europe/Asia model	2
F015,016	206 1039 063	Fuse 2A	Taiwan model	2

Ref. No.	Part No.	Part Name	Remarks	Q'ty
JA701~704	204 8540 012	4P pin jack		4
JK451	204 8217 031	Head phone jack		1
RL671	214 0127 003	Relay (RY-12W)		1
SW690	212 1031 008	Power switch (TV-5)		1
W401	203 0526 031	1P contact Ass'y		1
	513 2585 003	Fuse label		2
	513 2585 032	Fuse label		2
	202 0040 909	Fuse clip		4
	513 2585 003	Fuse label		2
	513 2585 032	Fuse Label		2

1U-2951 S-VIDEO UNIT ASS'Y

Ref. No.	Part No.	Part Name	Remarks
SEMICONDUCTORS GROUP			
IC101	262 2302 906	IC M66310FP-200C	
IC102	262 2035 008	IC MSC1937-03RS	
IC301~303	263 1018 003	IC MC14577CP	
IC304,305	262 1108 004	IC TC4051BP	
IC306,307	262 0276 005	IC HD14066BP	
IC308	263 1018 003	IC MC14577CP	
IC401,402	263 1018 003	IC MC14577CP	
IC403,404	262 1108 004	IC TC4051BP	
IC405	262 0276 005	IC HD14066BP	
IC406	263 1018 003	IC MC14577CP	
IC407,408	262 1108 004	IC TC4051BP	
IC409	263 1018 003	IC MC14577CP	
IC411	262 0276 005	IC HD14066BP	
IC412	263 1018 003	IC MC14577CP	
IC413	262 2067 005	IC MC74HC4053N	
IC414	262 2311 007	IC M35015-204SP	
IC415	263 0682 003	IC NJM2229S	
IC416	263 1018 003	IC MC14577CP	
TR101~103	272 0131 901	Transistor 2SB1041(R)	
TR104~107	269 0082 902	Transistor DTC114EK	
TR105~111	269 0082 902	Transistor DTC114EK	
TR112,113	269 0082 902	Transistor DTC114EK	
TR401	273 0384 900	Transistor 2SC2412K(S)	
TR402	273 0198 918	Transistor 2SC1815(BL)	
TR403	271 0238 908	Transistor 2SA1037K(S/R)	
TR404	273 0384 900	Transistor 2SC2412K(S)	
TR405	269 0082 902	Transistor DTC114EK	
D403~408	276 0432 903	Diode 1SS270A	
ZD101,102	276 0637 902	Zener diode MTZJ6.2A	6.2V
LD101~108	393 9434 906	LED SEL1210S	
LD109,110	393 9491 004	LED SML1216W	
LD111	393 9434 906	LED SEL1210S	
LD114	393 9549 008	LED LB-303VA	
RESISTORS GROUP (Not included carbon film ±5% 1/4W)			
R121~123	247 0009 985	Carbon chip 10 kohm 1/10W	RM73B--103J
R124~126	247 0007 945	Carbon chip 1 kohm 1/10W	RM73B--102J
R127,128	247 0009 985	Carbon chip 10 kohm 1/10W	RM73B--103J
R129~162	247 0011 944	Carbon chip 47 kohm 1/10W	RM73B--473J
R163,164	247 0009 901	Carbon chip 4.7 kohm 1/10W	RM73B--472J
R165~169	247 0007 945	Carbon chip 1 kohm 1/10W	RM73B--102J
R170	247 0005 976	Carbon chip 200 ohm 1/10W	RM73B--201J
R171	247 0006 917	Carbon chip 300 ohm 1/10W	RM73B--301J

Ref. No.	Part No.	Part Name	Remarks
R172	247 0006 933	Carbon chip 360 ohm 1/10W	RM73B--361J
R173	247 0007 945	Carbon chip 1 kohm 1/10W	RM73B--102J
R174	247 0008 957	Carbon chip 3 kohm 1/10W	RM73B--302J
R175	247 0005 976	Carbon chip 200 ohm 1/10W	RM73B--201J
R176	247 0006 917	Carbon chip 300 ohm 1/10W	RM73B--301J
R177	247 0006 933	Carbon chip 360 ohm 1/10W	RM73B--361J
R178	247 0007 945	Carbon chip 1 kohm 1/10W	RM73B--102J
R179	247 0008 957	Carbon chip 3 kohm 1/10W	RM73B--302J
R180	247 0005 976	Carbon chip 200 ohm 1/10W	RM73B--201J
R181	247 0006 917	Carbon chip 300 ohm 1/10W	RM73B--301J
R182	247 0006 933	Carbon chip 360 ohm 1/10W	RM73B--361J
R183	247 0007 945	Carbon chip 1 kohm 1/10W	RM73B--102J
R184	247 0008 957	Carbon chip 3 kohm 1/10W	RM73B--302J
R185	247 0005 976	Carbon chip 200 ohm 1/10W	RM73B--201J
R186	247 0006 917	Carbon chip 300 ohm 1/10W	RM73B--301J
R187	247 0006 933	Carbon chip 360 ohm 1/10W	RM73B--361J
R188	247 0007 945	Carbon chip 1 kohm 1/10W	RM73B--102J
R189	247 0008 957	Carbon chip 3 kohm 1/10W	RM73B--302J
R190	247 0005 976	Carbon chip 200 ohm 1/10W	RM73B--201J
R191	247 0006 917	Carbon chip 300 ohm 1/10W	RM73B--301J
R192	247 0006 933	Carbon chip 360 ohm 1/10W	RM73B--361J
R195	247 0009 901	Carbon chip 4.7 kohm 1/10W	RM73B--472J
R196,197	247 0011 944	Carbon chip 47 kohm 1/10W	RM73B--473J
R198,199	247 0005 905	Carbon chip 100 ohm 1/10W	RM73B--101J
R307	247 0010 961	Carbon chip 22 kohm 1/10W	RM73B--223J
R309	247 0010 961	Carbon chip 22 kohm 1/10W	RM73B--223J
R311	247 0010 961	Carbon chip 22 kohm 1/10W	RM73B--223J
R313	247 0010 961	Carbon chip 22 kohm 1/10W	RM73B--223J
R314	247 0009 985	Carbon chip 10 kohm 1/10W	RM73B--103J
R315	247 0005 905	Carbon chip 100 ohm 1/10W	RM73B--101J
R316	247 0009 985	Carbon chip 10 kohm 1/10W	RM73B--103J
R317	247 0005 905	Carbon chip 100 ohm 1/10W	RM73B--101J
R318	247 0009 985	Carbon chip 10 kohm 1/10W	RM73B--103J
R319	247 0010 958	Carbon chip 20 kohm 1/10W	RM73B--203J
R320	247 0009 985	Carbon chip 10 kohm 1/10W	RM73B--103J
R321	247 0005 905	Carbon chip 100 ohm 1/10W	RM73B--101J
R322	247 0009 985	Carbon chip 10 kohm 1/10W	RM73B--103J
R323,324	247 0005 905	Carbon chip 100 ohm 1/10W	RM73B--101J
R325	247 0009 985	Carbon chip 10 kohm 1/10W	RM73B--103J
R326	247 0006 975	Carbon chip 510 ohm 1/10W	RM73B--511J
R327	247 0006 988	Carbon chip 560 ohm 1/10W	RM73B--561J
R328	247 0005 905	Carbon chip 100 ohm 1/10W	RM73B--101J
R329	247 0009 985	Carbon chip 10 kohm 1/10W	RM73B--103J
R330	247 0006 975	Carbon chip 510 ohm 1/10W	RM73B--511J
R331	247 0006 991	Carbon chip 620 ohm 1/10W	RM73B--621J
R332	247 0005 905	Carbon chip 100 ohm 1/10W	RM73B--101J
R333	247 0009 985	Carbon chip 10 kohm 1/10W	RM73B--103J
R334	247 0005 905	Carbon chip 100 ohm 1/10W	RM73B--101J
R411	247 0010 961	Carbon chip 22 kohm 1/10W	RM73B--223J
R413	247 0010 961	Carbon chip 22 kohm 1/10W	RM73B--223J

Ref. No.	Part No.	Part Name	Remarks
R415	247 0010 961	Carbon chip 22 kohm 1/10W	RM73B--223J
R417	247 0010 961	Carbon chip 22 kohm 1/10W	RM73B--223J
R419	247 0005 905	Carbon chip 100 ohm 1/10W	RM73B--101J
R420	247 0009 985	Carbon chip 10 kohm 1/10W	RM73B--103J
R421	247 0005 905	Carbon chip 100 ohm 1/10W	RM73B--101J
R422	247 0009 985	Carbon chip 10 kohm 1/10W	RM73B--103J
R423	247 0010 961	Carbon chip 22 kohm 1/10W	RM73B--223J
R425	247 0010 961	Carbon chip 22 kohm 1/10W	RM73B--223J
R427	247 0005 905	Carbon chip 100 ohm 1/10W	RM73B--101J
R428	247 0009 985	Carbon chip 10 kohm 1/10W	RM73B--103J
R429	247 0002 966	Carbon chip 10 ohm 1/10W	RM73B--100J
R430	247 0008 915	Carbon chip 2 kohm 1/10W	RM73B--202J
R431	247 0005 905	Carbon chip 100 ohm 1/10W	RM73B--101J
R432	247 0009 985	Carbon chip 10 kohm 1/10W	RM73B--103J
R433	247 0005 905	Carbon chip 100 ohm 1/10W	RM73B--101J
R434	247 0009 985	Carbon chip 10 kohm 1/10W	RM73B--103J
R435	247 0006 975	Carbon chip 510 ohm 1/10W	RM73B--511J
R436	247 0006 988	Carbon chip 560 ohm 1/10W	RM73B--561J
R437	247 0006 975	Carbon chip 510 ohm 1/10W	RM73B--511J
R438	247 0006 988	Carbon chip 560 ohm 1/10W	RM73B--561J
R439	247 0009 985	Carbon chip 10 kohm 1/10W	RM73B--103J
R440	247 0005 905	Carbon chip 100 ohm 1/10W	RM73B--101J
R441,442	247 0009 985	Carbon chip 10 kohm 1/10W	RM73B--103J
R443	247 0005 905	Carbon chip 100 ohm 1/10W	RM73B--101J
R444	247 0009 985	Carbon chip 10 kohm 1/10W	RM73B--103J
R445,446	247 0005 905	Carbon chip 100 ohm 1/10W	RM73B--101J
R447	247 0009 985	Carbon chip 10 kohm 1/10W	RM73B--103J
R448	247 0006 975	Carbon chip 510 ohm 1/10W	RM73B--511J
R449	247 0006 988	Carbon chip 560 ohm 1/10W	RM73B--561J
R450	247 0005 905	Carbon chip 100 ohm 1/10W	RM73B--101J
R451	247 0009 985	Carbon chip 10 kohm 1/10W	RM73B--103J
R452	247 0006 975	Carbon chip 510 ohm 1/10W	RM73B--511J
R453	247 0006 988	Carbon chip 560 ohm 1/10W	RM73B--561J
R454	247 0010 958	Carbon chip 20 kohm 1/10W	RM73B--203J
R456	247 0009 985	Carbon chip 10 kohm 1/10W	RM73B--103J
R457	247 0005 905	Carbon chip 100 ohm 1/10W	RM73B--101J
R458,459	247 0009 985	Carbon chip 10 kohm 1/10W	RM73B--103J
R460	247 0009 930	Carbon chip 6.2 kohm 1/10W	RM73B--622J
R461	247 0005 976	Carbon chip 200 ohm 1/10W	RM73B--201J
R462	241 2387 908	Carbon film 1 ohm 1/4W (NB)	RD14B2E010JNBS
R463	247 0007 945	Carbon chip 1 kohm 1/10W	RM73B--102J
R464	241 2387 908	Carbon film 1 ohm 1/4W (NB)	RD14B2E010JNBS
R465	247 0002 966	Carbon chip 10 ohm 1/10W	RM73B--100J
R466	247 0007 945	Carbon chip 1 kohm 1/10W	RM73B--102J
R467	247 0013 984	Carbon chip 470 kohm 1/10W	RM73B--474J
R468	247 0006 946	Carbon chip 390 ohm 1/10W	RM73B--391J
R469	247 0007 987	Carbon chip 1.5 kohm 1/10W	RM73B--152J
R470	247 0009 985	Carbon chip 10 kohm 1/10W	RM73B--103J
R471	247 0011 957	Carbon chip 51 kohm 1/10W	RM73B--513J
R472	247 0007 961	Carbon chip 1.2 kohm 1/10W	RM73B--122J
R473	247 0009 969	Carbon chip 8.2 kohm 1/10W	RM73B--822J
R474	247 0011 944	Carbon chip 47 kohm 1/10W	RM73B--473J

Ref. No.	Part No.	Part Name	Remarks
R475	247 0005 989	Carbon chip 220 ohm 1/10W	RM73B--221J
R476	247 0009 969	Carbon chip 8.2 kohm 1/10W	RM73B--822J
R477	247 0011 944	Carbon chip 47 kohm 1/10W	RM73B--473J
R478	247 0010 961	Carbon chip 22 kohm 1/10W	RM73B--223J
R479,480	247 0009 901	Carbon chip 4.7 kohm 1/10W	RM73B--472J
R481	247 0007 945	Carbon chip 1 kohm 1/10W	RM73B--102J
R482	247 0008 915	Carbon chip 2 kohm 1/10W	RM73B--202J
R483	247 0009 956	Carbon chip 7.5 kohm 1/10W	RM73B--752J
R484	247 0011 902	Carbon chip 33 kohm 1/10W	RM73B--333J
R485	247 0007 945	Carbon chip 1 kohm 1/10W	RM73B--102J
R486	247 0008 902	Carbon chip 1.8 kohm 1/10W	RM73B--182J
R491,492	247 0018 905	Carbon chip 0 kohm 1/10W	RM73B--0R0K
CAPACITORS GROUP			
C101	254 4252 969	Electrolytic 470 µF/10V	CE04W1A471M
C102	257 0014 935	Ceramic chip 0.1 µF/25V	CK73F1E104Z
C103	254 4261 921	Electrolytic 100 µF/50V	CE04W1H101M
C104	257 0010 900	Ceramic chip 0.01 µF/50V	CK73B1H103K
C105	254 4250 945	Electrolytic 330 µF/6.3V	CE04W0J331M
C106	257 0004 961	Ceramic chip 100 pF/50V	CC73SL1H101J
C107	257 0008 983	Ceramic chip 1000 pF/50V	CK73B1H102K
C109,110	257 0010 900	Ceramic chip 0.01 µF/50V	CK73B1H103K
C301~303	254 4260 948	Electrolytic 1 µF/50V	CE04W1H010M
C304	257 0014 935	Ceramic chip 0.1 µF/25V	CK73F1E104Z
C305~310	254 4254 938	Electrolytic 47 µF/16V	CE04W1C470M
C311~316	257 0012 966	Ceramic chip 0.01 µF/50V	CK73F1H103Z
C317,318	254 4254 938	Electrolytic 47 µF/16V	CE04W1C470M
C319,320	257 0012 966	Ceramic chip 0.01 µF/50V	CK73F1H103Z
C321	254 4252 930	Electrolytic 100 µF/10V	CE04W1A101M
C323	254 4252 930	Electrolytic 100 µF/10V	CE04W1A101M
C325~327	257 0014 935	Ceramic chip 0.1 µF/25V	CK73F1E104Z
C401,402	257 0014 935	Ceramic chip 0.1 µF/25V	CK73F1E104Z
C403	254 4305 968	Electrolytic 1 µF/50V	CE04W1H010M
C404,405	254 4299 964	Electrolytic 47 µF/16V	CE04W1C470M
C406	254 4302 974	Electrolytic 100 µF/10V	CE04W1A101M
C407,408	254 4299 964	Electrolytic 47 µF/16V	CE04W1C470M
C409~412	257 0012 966	Ceramic chip 0.01 µF/50V	CK73F1H103Z
C413	254 4302 974	Electrolytic 100 µF/10V	CE04W1A101M
C415,416	257 0012 966	Ceramic chip 0.01 µF/50V	CK73F1H103Z
C417	254 4299 964	Electrolytic 47 µF/16V	CE04W1C470M
C418	254 4302 974	Electrolytic 100 µF/10V	CE04W1A101M
C420	254 4299 964	Electrolytic 47 µF/16V	CE04W1C470M
C421,422	257 0012 966	Ceramic chip 0.01 µF/50V	CK73F1H103Z
C423,424	254 4299 964	Electrolytic 47 µF/16V	CE04W1C470M
C425,426	257 0012 966	Ceramic chip 0.01 µF/50V	CK73F1H103Z
C429	254 4299 964	Electrolytic 47 µF/16V	CE04W1C470M
C430	254 4302 974	Electrolytic 100 µF/10V	CE04W1A101M
C432	254 4299 964	Electrolytic 47 µF/16V	CE04W1C470M
C433,434	257 0012 966	Ceramic chip 0.01 µF/50V	CK73F1H103Z

Ref. No.	Part No.	Part Name	Remarks
C435	254 4302 974	Electrolytic 100 µF/10V	CE04W1A101M
C437,438	254 4299 906	Electrolytic 10 µF/16V	CE04W1C100M
C439	254 4299 964	Electrolytic 47 µF/16V	CE04W1C470M
C440	254 4302 974	Electrolytic 100 µF/10V	CE04W1A101M
C441	254 4299 964	Electrolytic 47 µF/16V	CE04W1C470M
C442,443	256 1034 937	Metalized 0.047 µF/50V	CF93A1H473J
C444	257 0009 940	Ceramic chip 3300 pF/50V	CK73B1H332K
C445	257 0008 941	Ceramic chip 470 pF/50V	CK73B1H471K
C446	254 4305 968	Electrolytic 1 µF/50V	CE04W1H010M
C447	256 1034 953	Metalized 0.068 µF/50V	CF93A1H683J
C448	254 4305 968	Electrolytic 1 µF/50V	CE04W1H010M
C449	257 0005 902	Ceramic chip 150 pF/50V	CC73SL1H151J
C450	255 1264 911	Mylar film 1200 pF/50V	CQ93M1H122J(B)
C451	255 1265 978	Mylar film 0.022 µF/50V	CQ93M1H223J(B)
C452	257 0004 961	Ceramic chip 100 pF/50V	CC73SL1H101J
C453	254 4306 909	Electrolytic 4.7 µF/50V	CE04W1H4R7M
C454	254 4299 906	Electrolytic 10 µF/16V	CE04W1C100M
C455	254 4299 964	Electrolytic 47 µF/16V	CE04W1C470M
C456	257 0012 966	Ceramic chip 0.01 µF/50V	CK73F1H103Z
C457	254 4299 964	Electrolytic 47 µF/16V	CE04W1C470M
C458	257 0012 966	Ceramic chip 0.01 µF/50V	CK73F1H103Z
C459~461	257 0003 946	Ceramic chip 33 pF/50V	CC73SL1H330J
C462	257 0002 947	Ceramic chip 12 pF/50V	CC73SL1H120J
C463	257 0002 921	Ceramic chip 10 pF/50V	CC73SL1H100D
C464	257 0009 940	Ceramic chip 3300 pF/50V	CK73B1H332K
C465	254 4299 906	Electrolytic 10 µF/16V	CE04W1C100M
C466	257 0012 966	Ceramic chip 0.01 µF/50V	CK73F1H103Z
C467	254 4302 974	Electrolytic 100 µF/10V	CE04W1A101M
C468	255 1264 908	Mylar film 1000 pF/50V	CQ93M1H102J(B)
C469	254 4305 968	Electrolytic 1 µF/50V	CE04W1H010M
C470	256 1034 937	Metalized 0.047 µF/50V	CF93A1H473J
C471,472	257 0014 935	Ceramic chip 0.1 µF/25V	CK73F1E104Z

OTHER PARTS GROUP				Q'ty
CN46,47	205 0885 082	4P connector socket (TUC-P)		2
CN53	205 0355 059	5P KR connector base (L)		1
CN56	205 0343 058	5P connector base (KR-PH)		1
CN64	205 0942 019	6P connector socket (TUC-P)		1
CN82	205 0885 095	8P connector socket (TUC-P)		1
CN94	203 6218 055	4P DA-DA connector cord		1
CN103	205 0985 018	10P connector socket (TKC-A)		1
CN103	205 0986 017	10P connector plug (TKC-A)		1
CN123	205 0885 079	12P connector socket (TUC-P)		1
CN132	205 0942 006	13P connector socket (TUC-P)		1
CN291	205 0702 042	29P FFC connector base (L)		1
JK301~303	204 8516 004	3P pin jack (S-GND)		3
JK401	204 8415 008	3P S-terminal (AU)		1
JK402,403	204 8414 009	2P S-terminal (AU)		2
JK404	205 0906 000	1P S-terminal (AU.SW)		1

Ref. No.	Part No.	Part Name	Remarks	Q'ty
XL401	399 0105 009	Ceramic resonator	CSB503F2	1
XL402	399 0153 006	Ceramic resonator	14.32MHZ-12PF	1
S101,102	212 5604 910	Tact switch - TA (ALPS)		2
S103~106	212 5604 910	Tact switch - TA (ALPS)		4
S107~110	212 5604 910	Tact switch - TA (ALPS)		4
S111~114	212 5604 910	Tact switch - TA (ALPS)		4
S115~119	212 5604 910	Tact switch - TA (ALPS)		4
S118	212 5604 910	Tact switch - TA (ALPS)		1
S120-123	212 5604 910	Tact switch - TA (ALPS)		4
S124	212 5604 910	Tact switch - TA (ALPS)		1
S125~127	212 5604 910	Tact switch - TA (ALPS)		3
S128	212 0373 000	Rotaly encoder - EC16B		1
FL101	393 4156 001	FLD (FIP16FM7R)		1
L101	235 0060 989	Inductor 120 µH		1
L401	235 0060 963	Inductor 150 µH		1

1U-2952 POWER AMP.-1 UNIT ASS'Y

Ref. No.	Part No.	Part Name	Remarks
SEMICONDUCTORS GROUP			
TR405,406	273 0235 923	Transistor 2SC1841(E/F)	
TR411,412	273 0235 923	Transistor 2SC1841(E/F)	
TR415	273 0235 923	Transistor 2SC1841(E/F)	
TR421~425	273 0388 906	Transistor 2SC1740S(E)	
TR427	273 0388 906	Transistor 2SC1740S(E)	
TR428	269 0040 902	Transistor DTC144ES (47K-47K)	
TR429	273 0388 906	Transistor 2SC1740S(E)	
TR430	273 0303 910	Transistor 2SC1740S(S)	
TR431	271 0192 905	Transistor 2SA933S(S)	
TR432	273 0303 910	Transistor 2SC1740S(S)	
TR433	271 0131 924	Transistor 2SA988(E/F)	
TR435	272 0107 919	Transistor 2SB1328 (P/Q)	
TR521	273 0303 910	Transistor 2SC1740S(S)	
TR522	271 0192 905	Transistor 2SA933S(S)	
TR523	273 0303 910	Transistor 2SC1740S(S)	
TR601,602	273 0388 906	Transistor 2SC1740S(E)	
TR603	271 0192 905	Transistor 2SA933S(S)	
D401~405	276 0432 903	Diode 1SS270A	
D417	276 0432 903	Diode 1SS270A	
D419,422	276 0432 903	Diode 1SS270A	
D450	276 0371 006	Diode S10VB20F9	
D601	276 0432 903	Diode 1SS270A	
RESISTORS GROUP			
R405~412	244 2043 982	Metal oxide 0.22 ohm 1W	RS14B3AR22JNBS(S)
R413,414	244 2051 987	Metal oxide 4.7 ohm 1W	RS14B3A4R7JNBS(S)
R415~418	241 2380 950	Carbon film 2 kohm 1/4W(NB)	RD14B2E202JNBS
R425,426	244 2043 937	Metal oxide 10 ohm 1W	RS14B3A100JNBS(S)
R433~440	244 2043 982	Metal oxide 0.22 ohm 1W	RS14B3AR22JNBS(S)
R441,442	244 2051 987	Metal oxide 4.7 ohm 1W	RS14B3A4R7JNBS(S)
R443~446	241 2380 950	Carbon film 2 kohm 1/4W(NB)	RD14B2E202JNBS
R453,454	244 2043 937	Metal oxide 10 ohm 1W	RS14B3A100JNBS(S)
R459~462	244 2043 982	Metal oxide 0.22 ohm 1W	RS14B3AR22JNBS(S)
R463	244 2051 987	Metal oxide 4.7 ohm 1W	RS14B3A4R7JNBS(S)
R464,465	241 2380 950	Carbon film 2 kohm 1/4W(NB)	RD14B2E202JNBS
R469	244 2043 937	Metal oxide 10 ohm 1W	RS14B3A100JNBS(S)
R471~478	241 2387 908	Carbon film 1 ohm 1/4W(NB)	RD14B2E010JNBS
R479~483	244 2050 933	Metal oxide 180 ohm 1W	RS14B3A181JNBS(S)
R513,514	241 2387 908	Carbon film 1 ohm 1/4W(NB)	RD14B2E010JNBS
R531,532	241 2387 940	Carbon film 4.7 ohm 1/4W(NB)	RD14B2E4R7JNBS
R601	242 0073 000	Composition 2.2 Mohm 1/2W	RC05GF2H225K
R602	241 2375 978	Carbon film 20 ohm 1/4W(NB)	RD14B2E200JNBS

Ref. No.	Part No.	Part Name	Remarks
CAPACITORS GROUP			
C401,402	255 1265 978	Mylar film 0.022 μF/50V	CQ93M1H223J(B)
C403,404	253 1146 907	Ceramic 0.01 μF/50V	CK45F1H103Z
C405~408	254 4263 987	Electrolytic 10 μF/100V	CE04W2A100M
C409,410	256 1034 979	Metalized 0.1 μF/50V	CF93A1H104J
C411,412	255 1265 978	Mylar film 0.022 μF/50V	CQ93M1H223J(B)
C413,414	253 1146 907	Ceramic 0.01 μF/50V	CK45F1H103Z
C415~418	254 4263 987	Electrolytic 10 μF/100V	CE04W2A100M
C419,420	256 1034 979	Metalized 0.1 μF/50V	CF93A1H104J
C421	255 1265 978	Mylar film 0.022 μF/50V	CQ93M1H223J(B)
C422	253 1146 907	Ceramic 0.01 μF/50V	CK45F1H103Z
C423,424	254 4263 987	Electrolytic 10 μF/100V	CE04W2A100M
C425	256 1034 979	Metalized 0.1 μF/50V	CF93A1H104J
C429	254 4254 938	Electrolytic 47 μF/16V	CE04W1C470M
C430	253 9039 906	BC Ceramic cap. 0.1 μF/25V	CK45=1E104Z
C431	254 4254 938	Electrolytic 47 μF/16V	CE04W1C470M
C432	253 9039 906	BC Ceramic cap. 0.1 μF/25V	CK45=1E104Z
C433	254 4250 945	Electrolytic 330 μF/6.3V	CE04W0J331M
C434	253 1181 904	Ceramic 0.01 μF/50V	CK45F1H103Z
C441	254 4264 025	Electrolytic 100 μF/100V	CE04W2A101M
C450,451	256 1042 903	Metalized 0.1 μF/250V	CF93A2E104K
C454~456	256 1042 903	Metalized 0.1 μF/250V	CF93A2E104K
C460,461	255 1265 936	Mylar film 0.01 μF/50V	CQ93M1H103J(B)
C463~469	255 1265 936	Mylar film 0.01 μF/50V	CQ93M1H103J(B)
C499	254 4260 948	Electrolytic 1 μF/50V	CE04W1H010M
C509,510	254 4260 980	Electrolytic 10 μF/50V	CE04W1H100M
C519,520	254 4260 980	Electrolytic 10 μF/50V	CE04W1H100M
C521	253 9039 906	BC Ceramic cap. 0.1 μF/25V	CK45=1E104Z
C522	254 4250 945	Electrolytic 330 μF/6.3V	CE04W0J331M
C525	254 4260 980	Electrolytic 10 μF/50V	CE04W1H100M
C601	253 8014 702	Ceramic 0.01 μF/400VAC	CK45F2GAC103MC
C602	256 1034 979	Metalized 0.1 μF/50V	CF93A1H104J
C603	254 4260 948	Electrolytic 1 μF/50V	CE04W1H010M

OTHER PARTS GROUP				Q'ty
CN021	205 0442 001	2P Wrapping terminal		1
CN024	205 0606 025	2P Wrapping terminal		1
CN025	205 0581 001	2P VH connector base		1
CN029	205 0581 001	2P VH connector base		1
CN034	205 0087 039	3P Wrapping terminal		1
CN036,037	205 0087 039	3P Wrapping terminal		2
CN041	205 0666 049	4P connector base(9130)		5
CN048	205 0581 030	4P VH connector(WHT)		1
CN051	205 0666 052	5P connector(9130)		5
CN057	205 0343 058	5P connector(KR-PH)		1
CN066	205 1037 062	6P pin header (TXX)		10
CN072	205 0343 074	7P connector(KR-PH)		1
CN133	205 0375 039	13P connector(KR-PH)		1
CN932	205 0343 032	3P connector(KR-PH)		1

Ref. No.	Part No.	Part Name	Remarks	Q'ty
F001	206 1036 008	Fuse ST630MA	Europe/Asia model	1
F001	206 1039 063	Fuse (2.0A)	Taiwan model	1
F002	206 1051 009	Fuse (12A)	Taiwan model	1
F003	206 1036 011	Fuse (6.3A)	Europe/Asia model	1
F008	206 1015 016	Fuse (1.25A)	Europe/Asia model	1
F008	206 1046 014	Fuse (8A)	Taiwan model	1
JK801,802	205 1027 001	8P SP terminal(V-1)		2
L401~404	235 0068 004	Inductor(1 μH)		4
L405	235 0068 004	Inductor(1 μH)		1
RL401~405	214 0154 005	Relay(VB24SMBU)		4
RL601	214 0188 000	Relay(VS-12MBNR-SM2)(TV-8)		1
T601	233 6074 009	Power trans(Mini)-ES	Europe/Asia model	1
T601	233 5818 004	Power trans(Mini)-EU	Taiwan model	1
TP401~404	205 0154 030	3P NH connector base		4
TP405	205 0154 030	3P NH connector base		1
W412~415	203 0641 071	1P contact Ass		4
W417	203 0641 055	1P contact Ass		1
W418	203 0641 042	1P contact Ass		1
W419	203 0641 068	1P contact Ass		1
W451	203 0641 084	1P contact Ass		1
W452	203 0641 071	1P contact Ass		1
W453	203 0641 084	1P contact Ass		1
	202 0040 909	Fuse clip		4
	202 0040 909	Fuse clip		2
	279 0034 054	Posistor PTH9M04BC222TS2F333		1
	415 0309 026	P.V.C. tube(L=20)		2
	412 4165 005	Bus bar		6
	205 1034 007	M3 screw terminal		1
	203 0411 010	Connecting cord Ass		1
	203 0411 023	Connecting cord Ass		1
	203 0411 036	Connecting cord Ass		1
	203 0411 049	Connecting cord Ass		1
	203 0411 052	Connecting cord Ass		1
	513 2585 090	Fuse label	Europe/Asia model	1
	513 2654 002	Fuse label	Europe/Asia model	1
	513 2195 011	Fuse label	Europe/Asia model	1
	EP-5870	Fuse holder	Taiwan model	2

1U-2958 P. SUPPLY-3 UNIT ASS'Y

Ref. No.	Part No.	Part Name	Remarks
SEMICONDUCTORS GROUP			
IC401	268 0073 905	IC ICP-N15	IC protector
IC402	263 0793 002	IC NJM7806FA(S)	
IC801	263 0680 005	IC NJM5532DD	
IC901	263 0809 006	IC NJM7805FA(S)	
IC902	263 0554 005	IC NJM7905FA	
IC903	263 0793 002	IC NJM7806FA(S)	
IC904	263 0683 002	IC NJM7906FA	
IC905	263 0809 006	IC NJM7805FA(S)	
TR402	273 0384 900	Transistor 2SC2412K(S)	
TR475	272 0131 901	Transistor 2SB1041(R)	
TR476	271 0238 908	Transistor 2SA1037K(S/R)	
TR477	274 0169 908	Transistor 2SD1292(R)	
TR478	273 0384 900	Transistor 2SC2412K(S)	
TR801~804	275 0061 902	Transistor 2SK184(GR)/(BL)	
TR807	269 0083 901	Transistor DTA114EK	
TR808	269 0082 902	Transistor DTC114EK	
TR903	269 0047 905	Transistor DTA143EK	
TR904	269 0054 901	Transistor DTC144EK	
TR905	271 0131 924	Transistor 2SA988(E/F)	
D401~406	276 0553 905	Diode 1SR35-200A	
D801,802	276 0432 903	Diode 1SS270A	
D901	276 0424 005	Diode 4D4B42 (LC1)	
D902,903	276 0432 903	Diode 1SS270A	
D904~907	276 0548 910	Diode DSM1D2	
D908,909	276 0553 905	Diode 1SR35-200A	
ZD401	276 0644 911	Zener diode MTZJ7.5A	7.5V
ZD902,903	276 0644 937	Zener diode MTZJ9.1A	9.1V
ZD901	276 0645 978	Zener diode MTZJ36A	36V
RESISTORS GROUP (Not included carbon film ±5% 1/4W)			
R402	247 0009 901	Carbon chip 4700 ohm 1/10W	RM73B--472J
R404	247 0009 901	Carbon chip 4700 ohm 1/10W	RM73B--472J
R405	247 0009 985	Carbon chip 10 kohm 1/10W	RM73B--103J
R406	247 0010 958	Carbon chip 20 kohm 1/10W	RM73B--203J
R411	247 0012 927	Carbon chip 100 kohm 1/10W	RM73B--104J
R412~414	247 0009 985	Carbon chip 10 kohm 1/10W	RM73B--103J
R801,802	247 0011 973	Carbon chip 62 kohm 1/10W	RM73B--623J
R803,804	247 0007 987	Carbon chip 1.5 kohm 1/10W	RM73B--152J
R805,806	247 0011 973	Carbon chip 62 kohm 1/10W	RM73B--623J

Ref. No.	Part No.	Part Name	Remarks
R807,808	247 0009 985	Carbon chip 10 kohm 1/10W	RM73B--103J
R809,810	247 0007 961	Carbon chip 1.2 kohm 1/10W	RM73B--122J
R811,812	247 0005 989	Carbon chip 220 ohm 1/10W	RM73B--221J
R813,814	247 0009 998	Carbon chip 11 kohm 1/10W	RM73B--113J
R815,816	247 0008 902	Carbon chip 1.8 kohm 1/10W	RM73B--182J
R817,818	247 0002 911	Carbon chip 6.2 ohm 1/10W	RM73B--6R2K
R819,820	247 0005 976	Carbon chip 200 ohm 1/10W	RM73B--201J
R821,822	247 0004 906	Carbon chip 39 ohm 1/10W	RM73B--390J
R823,824	247 0005 905	Carbon chip 100 ohm 1/10W	RM73B--101J
R825,826	247 0012 927	Carbon chip 100 kohm 1/10W	RM73B--104J
R829,830	247 0013 900	Carbon chip 220 kohm 1/10W	RM73B--224J
R901	241 2376 919	Carbon film 30 ohm 1/4W (NB)	RD14B2E300JNBS
R903	241 2375 907	Carbon film 10 ohm 1/4W (NB)	RD14B2E100JNBS
R905	241 2387 940	Carbon film 4.7 ohm 1/4W (NB)	RD14B2E4R7JNBS
VR801	211 0797 133	Variable resistor 10 kohm	
VR802	211 0797 117	Variable resistor 30 kohm	
CAPACITORS GROUP			
C402	254 4256 790	Electrolytic 2200 µF/25V	CE04W1E222MC
C403	257 0012 966	Ceramic chip 0.01 µF/50V	CK73F1H103Z
C404	254 4254 909	Electrolytic 10 µF/16V	CE04W1C100M
C405	257 0012 966	Ceramic chip 0.01 µF/50V	CK73F1H103Z
C406,407	253 1146 907	Ceramic 0.01 µF/50V	CK45F1H103Z
C408	254 4260 948	Electrolytic 1 µF/50V	CE04W1H010M
C410	254 4260 948	Electrolytic 1 µF/50V	CE04W1H010M
C801,802	254 4260 948	Electrolytic 1 µF/50V	CE04W1H010M
C803,804	254 4254 938	Electrolytic 47 µF/16V	CE04W1C470M
C805,806	255 4200 901	Mylar film 100 pF/50V	CQ93P1H101J
C807,808	255 1264 940	Mylar film 2200 pF/50V	CQ93M1H222J(B)
C809,810	256 1035 907	Metalized 0.18 µF/50V	CF93A1H184J
C811,812	254 4260 948	Electrolytic 1 µF/50V	CE04W1H010M
C815,816	255 1265 949	Mylar film 0.012 µF/50V	CQ93M1H123J(B)
C817,818	256 1034 940	Metalized 0.056 µF/50V	CF93A1H563J
C819,820	254 4260 922	Electrolytic 0.03 µF/50V	CE04W1HR33M
C901,902	253 1146 907	Ceramic 0.01 µF/50V	CK45F1H103Z
C903,904	257 0012 966	Ceramic chip 0.01 µF/50V	CK73F1H103Z
C905	254 4363 706	Electrolytic 8200 µF/25V	CE04W1E822MC
C906	254 4256 787	Electrolytic 1000 µF/25V	CE04W1E102MC
C907	257 0012 966	Ceramic chip 0.01 µF/50V	CK73F1H103Z
C908,909	254 4258 947	Electrolytic 47 µF/35V	CE04W1V470M
C910,911	257 0012 966	Ceramic chip 0.01 µF/50V	CK73F1H103Z
C912,913	253 1146 907	Ceramic 0.01 µF/50V	CK45F1H103Z
C914,915	254 4257 702	Electrolytic 3300 µF/25V	CE04W1E332MC
C916~919	257 0012 966	Ceramic chip 0.01 µF/50V	CK73F1H103Z
C920,921	254 4258 947	Electrolytic 47 µF/35V	CE04W1V470M
C922	256 1034 979	Metalized 0.1 µF/50V	CF93A1H104J
C923,924	254 4261 743	Electrolytic 330 µF/50V	CE04W1H331MC

1U-2959 DSP UNIT ASS'Y

Ref. No.	Part No.	Part Name	Remarks
C925,926	254 4260 948	Electrolytic 1 µF/50V	CE04W1H010M
C927	257 0012 966	Ceramic chip 0.01 µF/50V	CK73F1H103Z
C928	254 4254 909	Electrolytic 10 µF/16V	CE04W1C100M
C929~935	257 0014 935	Ceramic chip 0.1 µF/25V	CK73F1E104Z
C936,937	257 0008 983	Ceramic chip 1000 pF/50V	CK73B1H102K
C939	257 0008 983	Ceramic chip 1000 pF/50V	CK73B1H102K
OTHER PARTS GROUP			**Q'ty**
CN032	205 0653 036	3P VH connector base	1
CN042	205 0884 083	4P connector base (TUC-P)	1
CN044	205 0884 083	4P connector base (TUC-P)	1
CN046	205 0884 083	4P connector base (TUC-P)	1
CN047	205 0884 083	4P connector base (TUC-P)	1
CN053	205 0343 058	5P connector base (KR-PH)	1
CN054	205 0233 058	5P EH connector base	1
CN057	205 0343 058	5P connector base (KR-PH)	1
CN061	205 0943 018	6P connector base (TUC-P)	1
CN063,064	205 0943 018	6P connector base (TUC-P)	2
CN081~083	205 0884 096	8P connector base (TUC-P)	3
CN086	205 0884 096	8P connector base (TUC-P)	1
CN089	205 0884 096	8P connector base (TUC-P)	1
CN091	205 0884 038	9P connector base (TUC-P)	1
CN094	205 0343 090	9P connector base (KR-PH)	1
CN099	205 0884 038	9P connector base (TUC-P)	1
CN109	205 0884 054	10P connector base (TUC-P)	1
CN111	205 0884 067	11P connector base (TUC-P)	1
CN113	205 0884 067	11P connector base (TUC-P)	1
CN121	205 0884 070	12P connector base (TUC-P)	1
CN123	205 0884 070	12P connector base (TUC-P)	1
CN132	205 0943 005	13P connector base (TUC-P)	1
CN142	205 0884 012	14P connector base (TUC-P)	1
CN143	205 1030 014	14P connector socket TRC-X	1
CN149	205 0884 012	14P connector base (TUC-P)	1
CN261,262	205 1030 001	26P connector socket TRC-X	2
F011~014	202 0040 909	Fuse clip	4
F011,012	206 1015 061	Fuse 2A	Europe/Asia model 2
F011,012	206 1039 063	Fuse 2A	Taiwan model 2
F013,014	206 1015 087	Fuse 4.0A	Europe/Asia model 2
F013,014	206 1039 092	Fuse 4.0A	Taiwan model 2
	202 0040 909	Fuse clip	4
	417 0253 026	Radiator	1
	513 2585 032	Fuse label	2
	513 2585 058	Fuse label	2

Ref. No.	Part No.	Part Name	Remarks
SEMICONDUCTORS GROUP			
IC001	262 2312 006	IC ZR38500(A3)	
IC003	399 0299 009	IC SG-531PH(33MHZ)	
IC016	262 1665 903	IC HD74HC74FP-TR	
IC017	262 1641 901	IC HD74HC157FP-TR	
IC018	262 2212 902	IC CS8412CS	
IC019	262 1718 902	IC TC74HC00AF	
IC020	262 1348 903	IC TC74HC123AF	
IC021	262 1640 902	IC HD74HC14FP-TR	
IC051,052	262 2324 900	IC MCM6205DJ15	
IC101	262 2158 901	IC AK5340-VS-E1	
IC102	399 0300 008	IC SG-531PH(12.288MHZ)	
IC103,104	263 0934 900	IC BA4510F	
IC105	263 0673 902	IC BA10393F	
IC154~156	263 0896 909	IC NJM2068MD	
IC201~207	263 0896 909	IC NJM2068MD	
IC208	262 1853 100	IC NJU7313AL	
IC301	263 1018 003	IC MC14577CP	
IC302	263 0615 902	IC BA15218F	
IC303	263 1039 901	IC NJM360M	
IC304	262 1205 907	IC TC74HCU04AF	
IC305	263 0615 902	IC BA15218F	
IC306	262 2211 000	IC PD4606A	
IC307	399 0298 000	IC SG-531PH(46.08MHZ)	
IC308	262 2324 900	IC MCM6205DJ15	
IC309	262 1205 907	IC TC74HCU04AF	
IC310	269 0097 007	IC GP1F32R	
IC314	262 1205 907	IC TC74HCU04AF	
IC315	262 2213 901	IC TC74HC151AF	
IC317	263 0755 008	IC CX20106A	
IC401	262 2321 013	IC TMP87CS71F-6519	
IC402	262 2322 012	IC TMP87CP71F-6520	
IC501~503	262 2210 904	IC SM5841HS	
IC504~506	262 2145 008	IC PCM69AP	
IC507~509	263 0896 909	IC NJM2068MD	
TR102	273 0384 900	Transistor 2SC2412K(S)	
TR151~156	273 0414 906	Transistor 2SC3326(A/B)	
TR157	269 0083 901	Transistor DTA114EK	
TR201~203	275 0094 908	Transistor 2SK209-GR	
TR204	269 0055 900	Transistor DTA144EK	
TR205	269 0054 901	Transistor DTC144EK	
TR301	273 0384 900	Transistor 2SC2412K(S)	
TR302	269 0119 901	Transistor DTA124EK	
TR303	273 0384 900	Transistor 2SC2412K(S)	

Ref. No.	Part No.	Part Name	Remarks
TR304	271 0238 908	Transistor 2SA1037K(S/R)	
TR305	272 0131 901	Transistor 2SB1041(R)	
TR306	271 0238 908	Transistor 2SA1037K(S/R)	
TR307	274 0169 908	Transistor 2SD1292(R)	
TR308	273 0384 900	Transistor 2SC2412K(S)	
TR309	269 0083 901	Transistor DTA114EK	
TR401	269 0083 901	Transistor DTA114EK	
TR402	269 0054 901	Transistor DTC144EK	
TR403	273 0384 900	Transistor 2SC2412K(S)	
TR404,405	269 0054 901	Transistor DTC144EK	
D101~106	276 0438 910	Diode MA151A	
D108	276 0438 910	Diode MA151A	
D201~203	276 0438 910	Diode MA151A	
D301~303	276 0438 910	Diode MA151A	
D401~403	276 0438 910	Diode MA151A	
D404	276 0553 905	Diode1SR35-200A	
CD301	276 0663 905	Diode KV1851-TL	
ZD401	276 0634 905	Zener diode MTZJ3.3A	3.3V
RESISTORS GROUP			
R028	247 0018 905	Carbon chip 0 ohm 1/10W	RM73B--0R0K
R030	247 0006 904	Carbon chip 270 ohm 1/10W	RM73B--271J
R031~033	247 0018 905	Carbon chip 0 ohm 1/10W	RM73B--0R0K
R035	247 0018 905	Carbon chip 0 ohm 1/10W	RM73B--0R0K
R036	247 0007 945	Carbon chip 1 kohm 1/10W	RM73B--102J
R037	247 0018 905	Carbon chip 0 ohm 1/10W	RM73B--0R0K
R038	247 0012 927	Carbon chip 100 kohm 1/10W	RM73B--104J
R039,040	247 0018 905	Carbon chip 0 ohm 1/10W	RM73B--0R0K
R051	244 2043 953	Metal oxide 470 ohm 1W	RS14B3A471JNBS(S)
R052~056	247 0004 922	Carbon chip 47 ohm 1/10W	RM73B--470J
R057	247 0007 945	Carbon chip 1 kohm 1/10W	RM73B--102J
R058	247 0004 922	Carbon chip 47 ohm 1/10W	RM73B--470J
R059	247 0018 905	Carbon chip 0 ohm 1/10W	RM73B--0R0K
R060	247 0004 922	Carbon chip 47 ohm 1/10W	RM73B--470J
R061	247 0012 927	Carbon chip 100 kohm 1/10W	RM73B--104J
R062	247 0009 985	Carbon chip 10 kohm 1/10W	RM73B--103J
R063~065	247 1018 904	Carbon chip 0 ohm 1/10W	RM73B20R0K
R101~104	247 0009 901	Carbon chip 4.7 kohm 1/10W	RM73B--472J
R105,106	247 0011 944	Carbon chip 47 kohm 1/10W	RM73B--473J
R107,108	247 0009 998	Carbon chip 11 kohm 1/10W	RM73B--113J
R109~114	247 0009 901	Carbon chip 4.7 kohm 1/10W	RM73B--472J
R115~118	247 0006 920	Carbon chip 330 kohm 1/10W	RM73B--331J
R120~123	247 0009 901	Carbon chip 4.7 kohm 1/10W	RM73B--472J

Ref. No.	Part No.	Part Name	Remarks
R124	247 0010 903	Carbon chip 12 kohm 1/10W	RM73B--123J
R125~127	247 0009 901	Carbon chip 4.7 kohm 1/10W	RM73B--472J
R128~130	247 0005 905	Carbon chip 100 ohm 1/10W	RM73B--101J
R131~137	247 0018 905	Carbon chip 0 ohm 1/10W	RM73B--0R0K
R151,152	247 0012 927	Carbon chip 100 kohm 1/10W	RM73B--104J
R153~156	247 0009 901	Carbon chip 4.7 kohm 1/10W	RM73B--472J
R159,160	247 0018 905	Carbon chip 0 ohm 1/10W	RM73B--0R0K
R161,162	247 0005 989	Carbon chip 220 ohm 1/10W	RM73B--221J
R163,164	247 0008 960	Carbon chip 3.3 kohm 1/10W	RM73B--332J
R165~168	247 0012 927	Carbon chip 100 kohm 1/10W	RM73B--104J
R169	247 0009 901	Carbon chip 4.7 kohm 1/10W	RM73B--472J
R170	247 0009 943	Carbon chip 6.8 kohm 1/10W	RM73B--682J
R171	247 0009 901	Carbon chip 4.7 kohm 1/10W	RM73B--472J
R172	247 0009 943	Carbon chip 6.8 kohm 1/10W	RM73B--682J
R175,176	247 0018 905	Carbon chip 0 ohm 1/10W	RM73B--0R0K
R177,178	247 0005 989	Carbon chip 220 ohm 1/10W	RM73B--221J
R179,180	247 0008 960	Carbon chip 3.3 kohm 1/10W	RM73B--332J
R181~184	247 0012 927	Carbon chip 100 kohm 1/10W	RM73B--104J
R185~188	247 0009 901	Carbon chip 4.7 kohm 1/10W	RM73B--472J
R191,192	247 0018 905	Carbon chip 0 ohm 1/10W	RM73B--0R0K
R193,194	247 0005 989	Carbon chip 220 ohm 1/10W	RM73B--221J
R195,196	247 0008 960	Carbon chip 3.3 kohm 1/10W	RM73B--332J
R197,198	247 0012 927	Carbon chip 100 kohm 1/10W	RM73B--104J
R201,202	247 0010 961	Carbon chip 22 kohm 1/10W	RM73B--223J
R203,204	247 0010 932	Carbon chip 16 kohm 1/10W	RM73B--163J
R205~208	247 0009 901	Carbon chip 4.7 kohm 1/10W	RM73B--472J
R209,210	247 0007 932	Carbon chip 910 ohm 1/10W	RM73B--911J
R211,212	247 0007 945	Carbon chip 1 kohm 1/10W	RM73B--102J
R213,214	247 0012 927	Carbon chip 100 kohm 1/10W	RM73B--104J
R215,216	247 0009 901	Carbon chip 4.7 kohm 1/10W	RM73B--472J
R217.218	247 0009 930	Carbon chip 6.2 kohm 1/10W	RM73B--622J
R219,220	247 0009 901	Carbon chip 4.7 kohm 1/10W	RM73B--472J
R221,222	247 0011 944	Carbon chip 47 kohm 1/10W	RM73B--473J
R223,224	247 0008 960	Carbon chip 3.3 kohm 1/10W	RM73B--332J
R225,226	247 0009 927	Carbon chip 5.6 kohm 1/10W	RM73B--562J
R227,228	247 0008 960	Carbon chip 3.3 kohm 1/10W	RM73B--332J
R229,230	247 0005 905	Carbon chip 100 ohm 1/10W	RM73B--101J
R231,232	247 0012 927	Carbon chip 100 kohm 1/10W	RM73B--104J
R233	247 0010 961	Carbon chip 22 kohm 1/10W	RM73B--223J
R234	247 0010 932	Carbon chip 16 kohm 1/10W	RM73B--163J
R235,236	247 0009 901	Carbon chip 4.7 kohm 1/10W	RM73B--472J
R237	247 0007 932	Carbon chip 910 ohm 1/10W	RM73B--911J
R238	247 0007 945	Carbon chip 1 kohm 1/10W	RM73B--102J
R239	247 0012 927	Carbon chip 100 kohm 1/10W	RM73B--104J
R240	247 0009 901	Carbon chip 4.7 kohm 1/10W	RM73B--472J
R241	247 0009 930	Carbon chip 6.2 kohm 1/10W	RM73B--622J
R242	247 0009 901	Carbon chip 4.7 kohm 1/10W	RM73B--472J
R243	247 0011 944	Carbon chip 47 kohm 1/10W	RM73B--473J
R244,245	247 0009 901	Carbon chip 4.7 kohm 1/10W	RM73B--472J
R246	247 0005 905	Carbon chip 100 ohm 1/10W	RM73B--101J
R247	247 0012 927	Carbon chip 100 kohm 1/10W	RM73B--104J

Ref. No.	Part No.	Part Name	Remarks
R248~250	247 0011 944	Carbon chip 47 kohm 1/10W	RM73B--473J
R252~255	247 0011 944	Carbon chip 47 kohm 1/10W	RM73B--473J
R256,257	247 0010 974	Carbon chip 24 kohm 1/10W	RM73B--243J
R258	247 0005 905	Carbon chip 100 ohm 1/10W	RM73B--101J
R259,260	247 0009 901	Carbon chip 4.2 kohm 1/10W	RM73B--472J
R261	247 0005 905	Carbon chip 100 ohm 1/10W	RM73B--101J
R262	247 0012 927	Carbon chip 100 kohm 1/10W	RM73B--104J
R264	247 0010 961	Carbon chip 22 kohm 1/10W	RM73B--223J
R265,266	247 0010 932	Carbon chip 16 kohm 1/10W	RM73B--163J
R267~270	247 0009 901	Carbon chip 4.7 kohm 1/10W	RM73B--472J
R271,272	247 0007 945	Carbon chip 1 kohm 1/10W	RM73B--102J
R273,274	247 0007 932	Carbon chip 910 ohm 1/10W	RM73B--911J
R275	247 0011 944	Carbon chip 47 kohm 1/10W	RM73B--473J
R276	247 0018 905	Carbon chip 0 ohm 1/10W	RM73B--0R0K
R301~304	247 0009 985	Carbon chip 10 kohm 1/10W	RM73B--103J
R305	247 0006 975	Carbon chip 510 ohm 1/10W	RM73B--511J
R306	247 0004 980	Carbon chip 82 ohm 1/10W	RM73B--820J
R307~309	247 0007 945	Carbon chip 1 kohm 1/10W	RM73B--102J
R310	247 0009 901	Carbon chip 4.7 kohm 1/10W	RM73B--472J
R311	247 0005 947	Carbon chip 150 ohm 1/10W	RM73B--151J
R312	247 0008 928	Carbon chip 2.2 kohm 1/10W	RM73B--222J
R313	247 0006 920	Carbon chip 330 ohm 1/10W	RM73B--331J
R314~316	247 0007 945	Carbon chip 1 kohm 1/10W	RM73B--102J
R317	247 0009 985	Carbon chip 10 kohm 1/10W	RM73B--103J
R318,319	247 0007 945	Carbon chip 1 kohm 1/10W	RM73B--102J
R320	247 0009 985	Carbon chip 10 kohm 1/10W	RM73B--103J
R321,322	247 0007 945	Carbon chip 1 kohm 1/10W	RM73B--102J
R323,324	247 0008 944	Carbon chip 2.7 kohm 1/10W	RM73B--272J
R325,326	247 0018 905	Carbon chip 0 ohm 1/10W	RM73B--0R0K
R327	247 0005 905	Carbon chip 100 ohm 1/10W	RM73B--101J
R328	247 0011 986	Carbon chip 68 kohm 1/10W	RM73B--683J
R329	247 0004 964	Carbon chip 68 ohm 1/10W	RM73B--680J
R331,332	247 0009 985	Carbon chip 10 kohm 1/10W	RM73B--103J
R333,334	247 0013 900	Carbon chip 220 kohm 1/10W	RM73B--224J
R335	247 0009 956	Carbon chip 7.5 ohm 1/10W	RM73B--752J
R336	247 0005 905	Carbon chip 100 ohm 1/10W	RM73B--101J
R337~341	247 0009 985	Carbon chip 10 kohm 1/10W	RM73B--103J
R342	247 0007 945	Carbon chip 1 kohm 1/10W	RM73B--102J
R343	247 0012 927	Carbon chip 100 kohm 1/10W	RM73B--104J
R344	247 0013 900	Carbon chip 220 kohm 1/10W	RM73B--224J
R346	247 0012 927	Carbon chip 100 kohm 1/10W	RM73B--104J
R347,348	247 0009 985	Carbon chip 10 kohm 1/10W	RM73B--103J
R349	247 0011 944	Carbon chip 47 kohm 1/10W	RM73B--473J
R350	247 0005 921	Carbon chip 120 ohm 1/10W	RM73B--121J
R351~353	247 0009 985	Carbon chip 10 kohm 1/10W	RM73B--103J
R354	247 0007 945	Carbon chip 1 kohm 1/10W	RM73B--102J
R355	247 0014 967	Carbon chip 1 Mohm 1/10W	RM73B--105J
R356	247 0006 962	Carbon chip 470 ohm 1/10W	RM73B--471J
R357	247 0012 969	Carbon chip 150 kohm 1/10W	RM73B--154J
R358,359	247 0011 944	Carbon chip 47 kohm 1/10W	RM73B--473J
R360	247 0009 985	Carbon chip 10 kohm 1/10W	RM73B--103J

Ref. No.	Part No.	Part Name	Remarks
R361	247 0009 901	Carbon chip 4.7 kohm 1/10W	RM73B--472J
R362	247 0009 985	Carbon chip 10 kohm 1/10W	RM73B--103J
R363	247 0012 927	Carbon chip 100 kohm 1/10W	RM73B--104J
R364~366	247 0009 985	Carbon chip 10 kohm 1/10W	RM73B--103J
R367~369	247 0009 901	Carbon chip 4.7 kohm 1/10W	RM73B--472J
R370	247 0004 977	Carbon chip 75 ohm 1/10W	RM73B--750J
R371	247 0005 905	Carbon chip 100 ohm 1/10W	RM73B--101J
R372	247 0008 928	Carbon chip 2.2 ohm 1/10W	RM73B--222J
R373	247 0011 944	Carbon chip 47 kohm 1/10W	RM73B--473J
R374	247 0005 905	Carbon chip 100 ohm 1/10W	RM73B--101J
R375	247 0011 928	Carbon chip 93 kohm 1/10W	RM73B--393J
R376	247 0007 945	Carbon chip 1 kohm 1/10W	RM73B--102J
R377	247 0004 922	Carbon chip 47 ohm 1/10W	RM73B--470J
R378	247 0012 972	Carbon chip 160 kohm 1/10W	RM73B--164J
R379	247 0005 905	Carbon chip 100 ohm 1/10W	RM73B--101J
R401	247 0009 985	Carbon chip 10 kohm 1/10W	RM73B--103J
R402	247 0012 927	Carbon chip 100 kohm 1/10W	RM73B--104J
R403	247 0009 985	Carbon chip 10 kohm 1/10W	RM73B--103J
R404~411	247 0009 901	Carbon chip 4.7 kohm 1/10W	RM73B--472J
R412~415	247 0009 985	Carbon chip 10 kohm 1/10W	RM73B--103J
R424	247 0009 985	Carbon chip 10 kohm 1/10W	RM73B--103J
R426	247 0006 975	Carbon chip 510 ohm 1/10W	RM73B--511J
R427	247 0007 945	Carbon chip 1 kohm 1/10W	RM73B--102J
R429,430	247 0005 905	Carbon chip 100 ohm 1/10W	RM73B--101J
R431~434	247 0009 901	Carbon chip 4.7 kohm 1/10W	RM73B--472J
R435~448	247 0009 985	Carbon chip 10 kohm 1/10W	RM73B--103J
R454	247 0009 985	Carbon chip 10 kohm 1/10W	RM73B--103J
R455	247 0013 900	Carbon chip 220 kohm 1/10W	RM73B--224J
R456	247 0009 985	Carbon chip 10 kohm 1/10W	RM73B--103J
R457	247 0009 901	Carbon chip 4.7 kohm 1/10W	RM73B--472J
R458	247 0009 985	Carbon chip 10 kohm 1/10W	RM73B--103J
R459	247 0007 945	Carbon chip 1 kohm 1/10W	RM73B--102J
R460	247 0009 901	Carbon chip 4.7 kohm 1/10W	RM73B--472J
R461,462	247 0007 945	Carbon chip 1 kohm 1/10W	RM73B--102J
R463	241 2387 940	Carbon film 4.7 ohm 1/4W(NB)	RD14B2E4R7JNBS
R464	247 0018 905	Carbon chip 0 ohm 1/10W	RM73B--0R0K
R466	247 0009 985	Carbon chip 10 kohm 1/10W	RM73B--103J
R468,469	247 0009 985	Carbon chip 10 kohm 1/10W	RM73B--103J
R470~472	247 0009 901	Carbon chip 4.7 kohm 1/10W	RM73B--472J
R473	247 0008 928	Carbon chip 2.2 kohm 1/10W	RM73B--222J
R481	247 0009 985	Carbon chip 10 kohm 1/10W	RM73B--103J
R482~486	247 0009 901	Carbon chip 4.7 kohm 1/10W	RM73B--472J
R486,487	247 0009 985	Carbon chip 10 kohm 1/10W	RM73B--103J
R501~515	247 0006 920	Carbon chip 330 ohm 1/10W	RM73B--331J
R517,518	247 0007 961	Carbon chip 1.2 kohm 1/10W	RM73B--122J
R519,520	247 0006 988	Carbon chip 560 ohm 1/10W	RM73B--561J
R521~524	247 0009 901	Carbon chip 4.7 kohm 1/10W	RM73B--472J
R525,526	247 0007 961	Carbon chip 1.2 kohm 1/10W	RM73B--122J
R527,528	247 0006 988	Carbon chip 560 ohm 1/10W	RM73B--561J
R529~532	247 0009 901	Carbon chip 4.7 kohm 1/10W	RM73B--472J

Ref. No.	Part No.	Part Name	Remarks
R533,534	247 0007 961	Carbon chip 1.2 kohm 1/10W	RM73B--122J
R535,536	247 0006 988	Carbon chip 560 ohm 1/10W	RM73B--561J
R537~540	247 0009 901	Carbon chip 4.7 kohm 1/10W	RM73B--472J
CAPACITORS GROUP			
C039~042	257 0012 966	Ceramic chip 0.01 µF/50V	CK73F1H103Z
C043	257 0014 935	Ceramic chip 0.1 µF/25V	CK73F1E104Z
C044	256 1034 937	Metalized 0.047 µF/50V	CF93A1H473J
C045,046	257 0012 966	Ceramic chip 0.01 µF/50V	CK73F1H103Z
C047	254 4196 957	Electrolytic 2.2 µF/50V	CE04W1H2R2M (SRA)
C048	257 0012 966	Ceramic chip 0.01 µF/50V	CK73F1H103Z
C051~055	257 0014 935	Ceramic chip 0.1 µF/25V	CK73F1E104Z
C056	257 0012 966	Ceramic chip 0.01 µF/50V	CK73F1H103Z
C057~061	257 0014 935	Ceramic chip 0.1 µF/25V	CK73F1E104Z
C062	254 4260 948	Electrolytic 1 µF/50V	CE04W1H010M
C063~067	257 0014 935	Ceramic chip 0.1 µF/25V	CK73F1E104Z
C068	257 0012 966	Ceramic chip 0.01 µF/50V	CK73F1H103Z
C069~072	257 0014 935	Ceramic chip 0.1 µF/25V	CK73F1E104Z
C073	257 0008 983	Ceramic chip 1000 pF/50V	CK73B1H102K
C074,075	257 0014 935	Ceramic chip 0.1 µF/25V	CK73F1E104Z
C076	256 1034 979	Metalized 0.1 µF/50V	CF93A1H104J
C077	257 0012 966	Ceramic chip 0.01 µF/50V	CK73F1H103Z
C078	257 0008 983	Ceramic chip 1000 pF/50V	CK73B1H102K
C079~081	257 0012 966	Ceramic chip 0.01 µF/50V	CK73F1H103Z
C082	254 4196 957	Electrolytic 2.2 µF/50V	CE04W1H2R2M (SRA)
C083	257 0012 966	Ceramic chip 0.01 µF/50V	CK73F1H103Z
C101,102	257 0014 935	Ceramic chip 0.1 µF/25V	CK73F1E104Z
C103,104	254 4193 905	Electrolytic 10 µF/16V	CE04W1C100M (SRA)
C105,106	254 4196 944	Electrolytic 1 µF/50V	CE04W1H010M (SRA)
C107,108	254 4193 905	Electrolytic 10 µF/16V	CE04W1C100M (SRA)
C109,110	255 1264 924	Mylar film 1500 pF/50V	CQ93M1H152J(B)
C112-115	257 0014 935	Ceramic chip 0.1 µF/25V	CK73F1E104Z
C116	254 4193 905	Electrolytic 10 µF/16V	CE04W1C100M (SRA)
C118	257 0014 935	Ceramic chip 0.1 µF/25V	CK73F1E104Z
C119	254 4193 905	Electrolytic 10 µF/16V	CE04W1C100M (SRA)
C120	257 0014 935	Ceramic chip 0.1 µF/25V	CK73F1E104Z
C122	257 0008 983	Ceramic chip 1000 pF/50V	CK73B1H102K
C123	257 0012 966	Ceramic chip 0.01 µF/50V	CK73F1H103Z
C124	256 1034 979	Metalized 0.1 µF/50V	CF93A1H104J
C125	257 0012 966	Ceramic chip 0.01 µF/50V	CK73F1H103Z
C126	257 0014 935	Ceramic chip 0.1 µF/25V	CK73F1E104Z
C127	257 0012 966	Ceramic chip 0.01 µF/50V	CK73F1H103Z
C128	257 0008 983	Ceramic chip 1000 pF/50V	CK73B1H102K
C129	257 0004 961	Ceramic chip 100 pF/50V	CC73SL1H101J
C130~139	257 0008 983	Ceramic chip 1000 pF/50V	CK73B1H102K
C151,152	257 0012 966	Ceramic chip 0.01 µF/50V	CK73F1H103Z
C153~158	255 1265 907	Mylar film 6800 pF/50V	CQ93M1H682J(B)
C159,160	254 4193 905	Electrolytic 10 µF/16V	CE04W1C100M (SRA)
C161,162	255 4202 925	Mylar film 820 pF/50V	CQ93P1H821J
C163,164	255 4201 926	Mylar film 330 pF/50V	CQ93P1H331J

Ref. No.	Part No.	Part Name	Remarks
C165,166	254 4193 905	Electrolytic 10 µF/16V	CE04W1C100M (SRA)
C175,176	254 4193 905	Electrolytic 10 µF/16V	CE04W1C100M (SRA)
C177	255 4202 925	Mylar film 820 pF/50V	CQ93P1H821J
C178	256 1034 979	Metalized 0.1 µF/50V	CF93A1H104J
C179	255 4201 926	Mylar film 330 pF/50V	CQ93P1H331J
C180	256 1034 937	Metalized 0.047 µF/50V	CF93A1H473J
C181,182	254 4193 905	Electrolytic 10 µF/16V	CE04W1C100M (SRA)
C191,192	254 4193 905	Electrolytic 10 µF/16V	CE04W1C100M (SRA)
C193,194	255 4202 925	Mylar film 820 pF/50V	CQ93P1H821J
C195,196	255 4201 926	Mylar film 330 pF/50V	CQ93P1H331J
C197,198	254 4193 905	Electrolytic 10 µF/16V	CE04W1C100M (SRA)
C201,202	256 1034 966	Metalized 0.082 µF/50V	CF93A1H823J
C203,204	256 1034 982	Metalized 0.12 µF/50V	CF93A1H124J
C205~208	254 4193 905	Electrolytic 10 µF/16V	CE04W1C100M (SRA)
C209,210	255 1264 982	Mylar film 4700 pF/50V	CQ93M1H472J(B)
C211,212	254 4252 930	Electrolytic 100 µF/10V	CE04W1A101M
C213,214	257 0014 935	Ceramic chip 0.1 µF/25V	CK73F1E104Z
C215	256 1034 966	Metalized 0.082 µF/50V	CF93A1H823J
C216	256 1034 982	Metalized 0.12 µF/50V	CF93A1H124J
C217,218	254 4193 905	Electrolytic 10 µF/16V	CE04W1C100M (SRA)
C219	255 1264 982	Mylar film 4700 pF/50V	CQ93M1H472J(B)
C220	254 4193 905	Electrolytic 10 µF/16V	CE04W1C100M (SRA)
C221,222	257 0014 935	Ceramic chip 0.1 µF/25V	CK73F1E104Z
C223,224	257 0012 982	Ceramic chip 0.022 µF/50V	CK73F1H223Z
C225	254 4193 905	Electrolytic 10 µF/16V	CE04W1C100M (SRA)
C228	256 1034 982	Metalized 0.12 µF/50V	CF93A1H124J
C229	256 1034 940	Metalized 0.056 µF/50V	CF93A1H563J
C230,231	257 0014 935	Ceramic chip 0.1 µF/25V	CK73F1E104Z
C232	254 4193 905	Electrolytic 10 µF/16V	CE04W1C100M (SRA)
C233,234	254 4196 944	Electrolytic 1 µF/50V	CE04W1H010M (SRA)
C235,236	256 1034 966	Metalized 0.082 µF/50V	CF93A1H823J
C237,238	256 1034 982	Metalized 0.12 µF/50V	CF93A1H124J
C239,240	254 4193 905	Electrolytic 10 µF/16V	CE04W1C100M (SRA)
C241~250	257 0014 935	Ceramic chip 0.1 µF/25V	CK73F1E104Z
C251,252	254 4196 944	Electrolytic 1 µF/50V	CE04W1H010M (SRA)
C303	257 0011 941	Ceramic chip 0.022 µF/25V	CK73B1E223K
C304~307	254 4260 948	Electrolytic 1 µF/50V	CE04W1H010M
C308	257 0004 932	Ceramic chip 75 pF/50V	CC73SL1H750J
C309,310	257 0010 900	Ceramic chip 0.01 µF/50V	CK73B1H103K
C311	254 4254 909	Electrolytic 10 µF/16V	CE04W1C100M
C312	257 0012 966	Ceramic chip 0.01 µF/50V	CK73F1H103Z
C313	256 1035 952	Metalized 0.47 µF/50V	CF93A1H474J
C314	257 0008 983	Ceramic chip 1000 pF/50V	CK73B1H102K
C315	256 1035 952	Metalized 0.47 µF/50V	CF93A1H474J
C316	257 0014 935	Ceramic chip 0.1 µF/25V	CK73F1E104Z
C318~321	257 0012 966	Ceramic chip 0.01 µF/50V	CK73F1H103Z
C322,323	254 4254 909	Electrolytic 10 µF/16V	CE04W1C100M
C324~326	257 0012 966	Ceramic chip 0.01 µF/50V	CK73F1H103Z
C327	254 3053 936	Electrolytic 47 µF/16V	CE04D1C470MBP
C328	257 0011 996	Ceramic chip 0.1 µF/25V	CK73B1E104K

ADJUSTMENT

Confirming for Digital Block (1U-2959-1, 2)

When the unit is in normal operation, the digital signals provide as shown in figure and confirm the test points with corresponding wareforms.

When the RF signal is fed.

fig-1

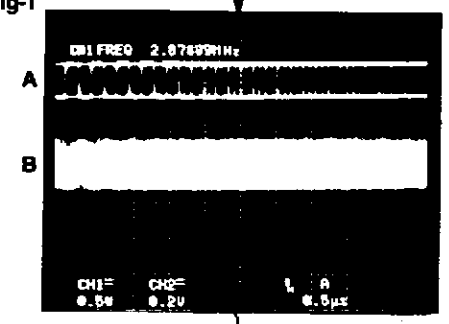

A: IC306 82 pin
B: IC301 1 pin

Vertical: IC306 82 pin 5V/div
IC301 1 pin 2V/div
Horizontal: 0.5 µS/div

fig-2

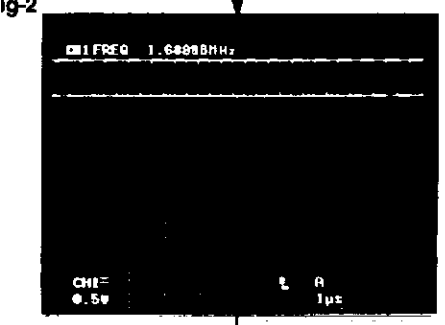

IC304 8 pin
IC18 10 pin

DIG-DATA (Bi-Phase DATA)

Vertical: 5V/div
Horizontal: 1.0 µS/div

fig-3

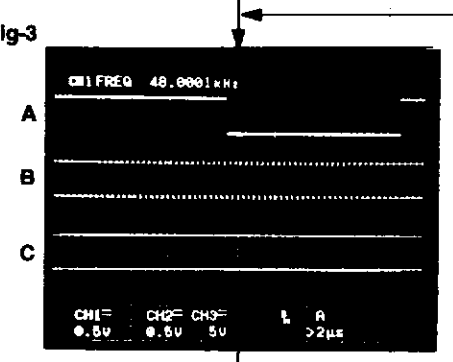

A: IC18 11 pin
B: IC18 12 pin
C: IC18 19 pin

Vertical: 5V/div
Horizontal: 2 µS/div

fig-4

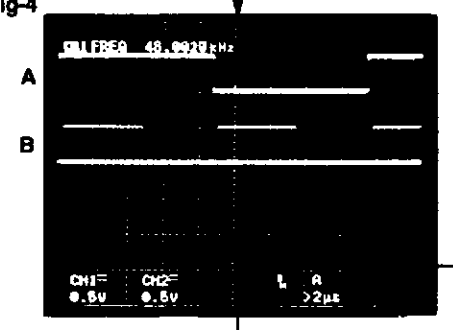

A: IC1 95 pin
B: IC1 101 pin

Vertical: 5V/div
Horizontal: 2 µS/div

fig-5

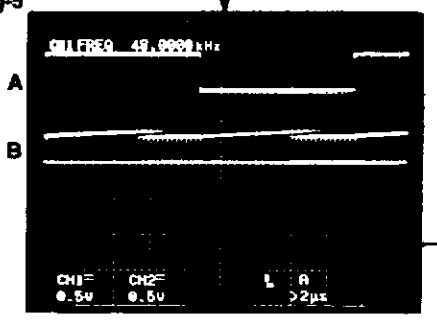

A: IC501 ~ 503 20 pin
B: IC501 ~ 503 22 pin

Vertical: 5V/div
Horizontal: 2 µS/div

When the digital signal is fed.

(EX. fs = 48 KHz)

fig-2

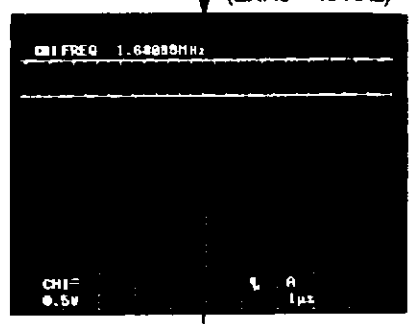

IC316 14 pin (OPT)
IC316 3 pin (COAX)
IC18 10 pin

Vertical: 5V/div
Horizontal: 1.0 µS/div

fig-6

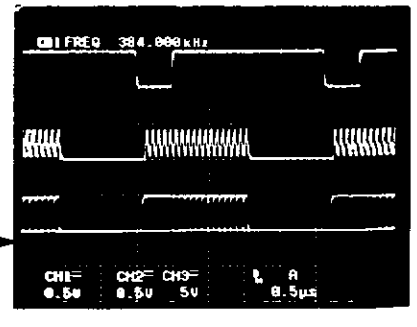

A: IC504 ~ 506 13 pin
B: IC504 ~ 506 11 pin
C: IC504 ~ 506 14 pin

Vertical: 5V/div
Horizontal: 0.5 µS/div

When the analog signal is fed.

fig-3

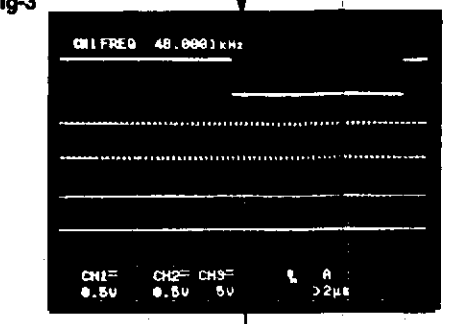

A: IC101 14 pin
B: IC101 15 pin
C: IC101 20 pin

Vertical: 5V/div
Horizontal: 0.5 µS/div

Confirm the normal communication waveforms (Fig7) at P112Pin, 49Pin and 115Pin of IC1 which is fed from the microcomputer with serial data communication control.

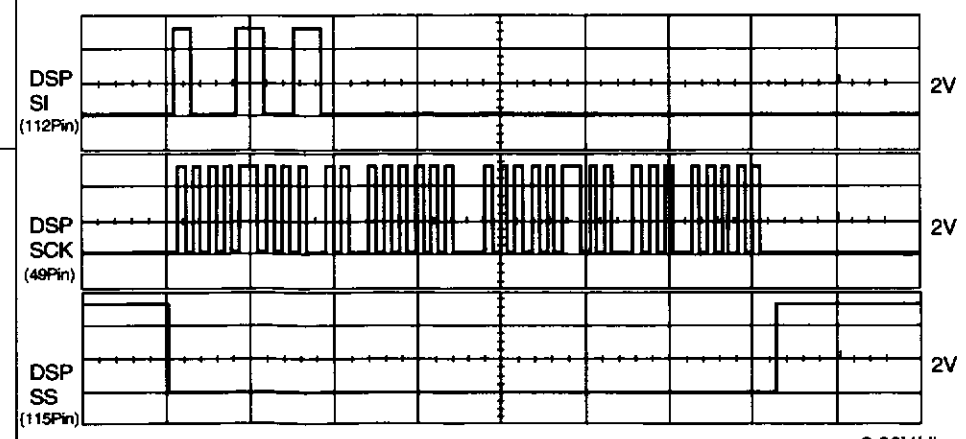

fig-7 (The DSPSI signal is a reference data)

FUNCTION OF NEW CIRCUIT

Circuit Description

DOLBY AC-3

DOLBY AC-3 is a format of new surround signal reproduces maximum 5 channels, i. e. FRONT-LEFT, -RIGHT, CENTER and SURROUND-LEFT, -RIGHT ;plus exclusive subwoofer signal (0.1 ch), totally 5.1 channels from the exclusive digital signal.
Following is the featuring points of AC-3.

(1) Makes surround channel into stereo.
(2) Provides optimum separation due to independent processing of each channel signal.
(AC-3: More than 80 dB, PRO LOGIC: Approx. 25~40 dB)
(3) Resultant surpassed orientation feeling and movement feeling obtained from. uniform frequency characteristic.
(AC-3: 20Hz~20kHz all channels, PRO LOGIC: 20 Hz~20 kHz FRONT, CENTER channels 20 Hz~7 kHz SURROUND channels)
(4) With the high-efficient signal coding technique, one digital cable permits transmission maintaining the above features.

Comparative Diagram of PRO LOGIC and AC-3

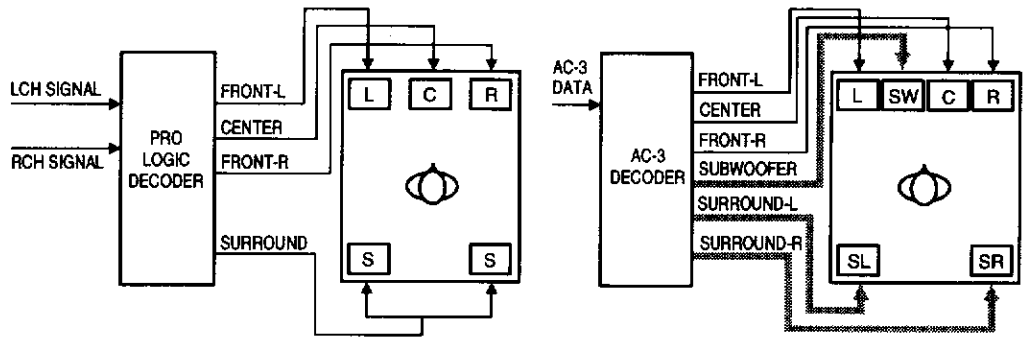

Two kinds of input signals: one corresponds "AC-3RF" signal emitting from LD player; the other is universal optical or coaxial digital format "IEC958" over lapped with "AC-3 exclusive" digital signal. AC-3RF signal is connected via the terminals "AC-3RF OUT" equipped with AC-3 corresponding LD player and "AC-3RF" input of AVC-3800 with a general coaxial digital cable. An applied signal to AVC-3800 goes through demodulator IC(IC305), delivered to DSP (IC1) through input selector (IC315), DIR (IC18) and executed decode processing of AC-3.
The other one is connected in the same way as universal optical or coaxial digital signal. AVC-3800 corresponds with automatic shifting of AC-3 and other signal (PCM) according to input signal.
The signal of each input terminal is delivered to selector (IC315) and applied the same process as to AC-3RF afterward.
AC-3 data and PCM data are transmitted with a common line.

DSP (IC1) performs AC-3 decoding process, DQLBY PRO LOGIC process and PCM digital process and PCM digital process by shifting. Decoded signal to each channel is D/A converted and delivered to volume control.

Block Diagram of AC-3, PCM Input Section (1U-2959-1, 1U-2959-2)

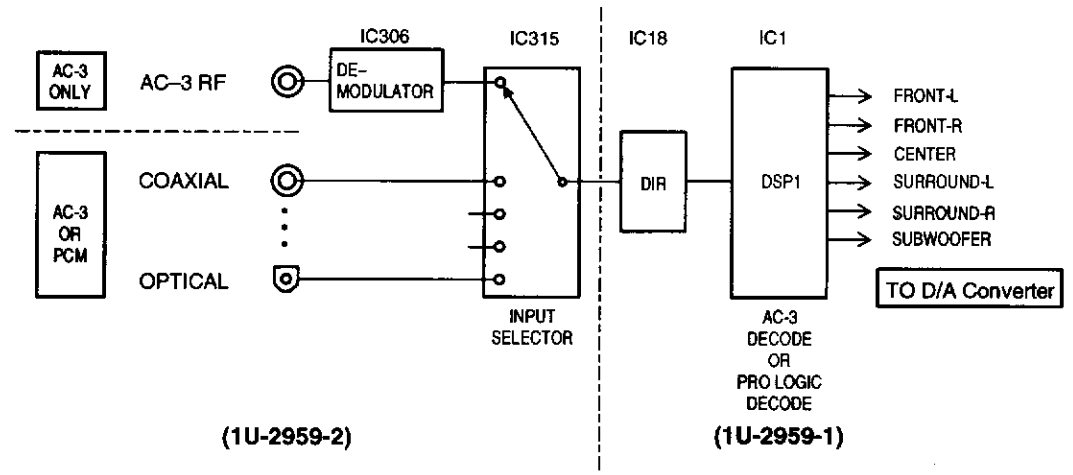

INITIAL SETTING OF EACH MODE

	FRONT L LEV.	FRONT R LEV	CENTER LEVEL	SURROUND L LEV	SURROUND R LEV	S. WOOFER LEVEL	INPUT LEVEL	ROOM SIZE	EFFECT LEVEL	DELAY TIME	CINEMA EQ	DIALOG ✳1	DYNAMIC ✳1
DIRECT	0 dB	0 dB	—	—	—	0 dB	—	—	—	—	—	ON	OFF
STEREO	0 dB	0 dB	—	—	—	0 dB	0 dB	—	—	—	—	ON	OFF
EXTERNAL INPUTS	0 dB	0 dB	0 dB	0 dB	0 dB	0 dB	—	—	—	—	—	—	—
MONO	—	—	0 dB	—	—	0 dB	0 dB	—	—	—	—	—	—
5CH STEREO	0 dB	0 dB	0 dB	0 dB	0 dB	0 dB	0 dB	—	—	—	—	—	—
DOLBY AC-3 or DLOBY PROLOGIC	0 dB	0 dB	0 dB	0 dB	0 dB	0 dB	0 dB	—	—	—	OFF	ON	OFF
SUPER STADIUM	0 dB	0 dB	0 dB	0 dB	0 dB	0 dB	0 dB	MED	10	—	—	—	—
ROCK ARENA	0 dB	0 dB	0 dB	0 dB	0 dB	0 dB	0 dB	MED	10	—	—	—	—
JAZZ CLUB	0 dB	0 dB	0 dB	0 dB	0 dB	0 dB	0 dB	MED	10	—	—	—	—
CLASSIC CONCERT	0 dB	0 dB	0 dB	0 dB	0 dB	0 dB	0 dB	MED	10	—	—	—	
MATRIX	0 dB	0 dB	0 dB	0 dB	0 dB	0 dB	—	—	—	30m sec	—	—	—

✳1 : Conditions in case for setting AC-3 data to ZR38500.
Others:
- Set MULTI/REC SELECT to SOURCE.
- Set TAPE MONITOR to OFF.
- Set VIDEO SELECT to OFF.
- Set MASTER VOL to - ∞ .
- Each input should be set to analog input.
- Set TEST TONE to OFF.
- In case DEFAULT is selected for SURR. PARAMETERS setting menu, sets the appropriate parameter of ROOM SISE, EFFECT LEVEL, DELAY, CINEMA, D. COMP to the initial value of above table.

5-4 Radiator SUB Ass'y (P. Supply-2 Unit 1U-2949-2, P. Supply-3 Unit 1U-2958-1)

Remove 2 screws Ⓣ fixing the Radiator and remove 2 screws Ⓤ fixing the P. Supply-3 Unit (1U-2958-1), then disconnect each connector and detach the Radiator SUB Ass'y as shown in the arrow direction.

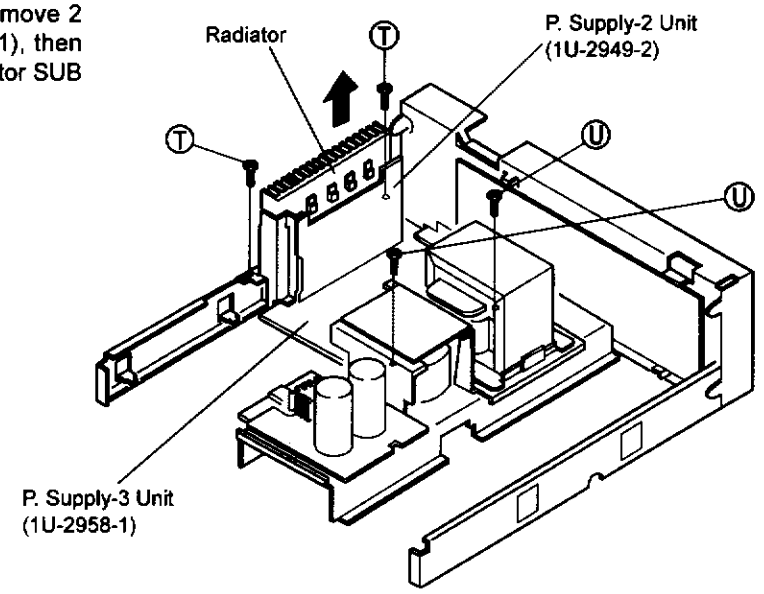

5-5 P.Supply-4 Unit (1U-2949-6) and P.Supply-1 Unit (1U-2952-2)

Remove 4 screws Ⓥ and detach the P. Supply-1 Unit (1U-2952-2).
Remove 4 screws Ⓦ, then detach the P. Supply-4 Unit (1U-2949-6)

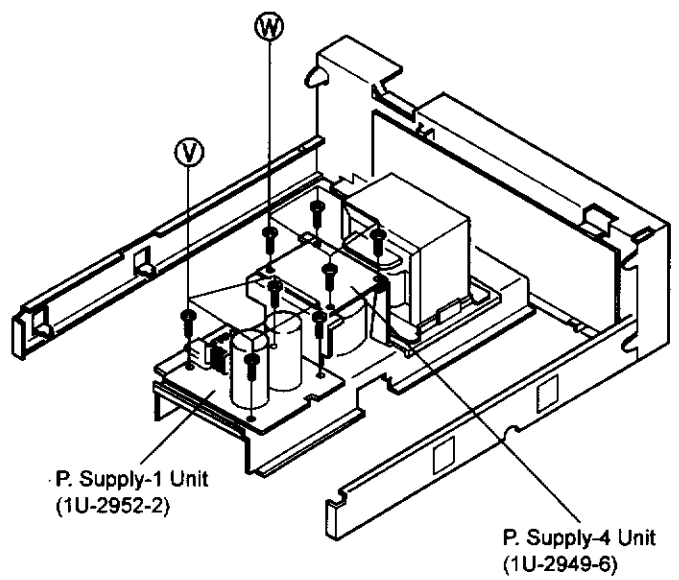

5-6 H/P Unit (1U-2949-4), Tone-2 Unit (1U-2958-3) and DSP Unit (1U-2959-1)

Remove 2 screws Ⓧ, then detach the DSP Unit (1U-2959-1).

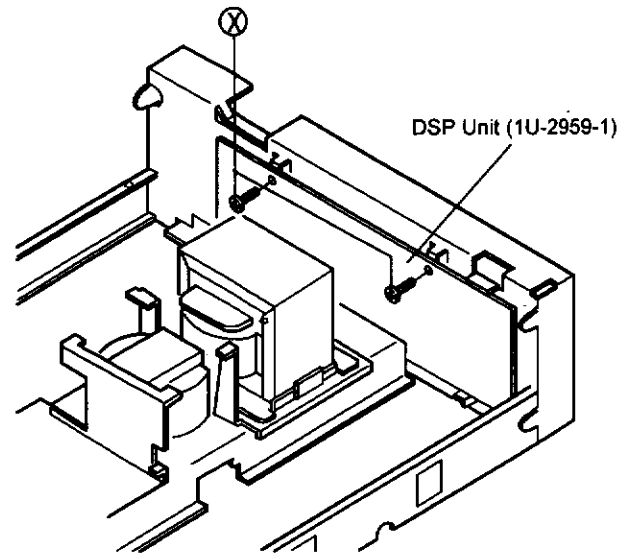

Remove a screw Ⓨ and undo a Snap Plate as shown in figure, then detach the H/P Unit (1U-2949-4).
Remove 2 Nuts and detach the Tone-2 Unit (1U-2958-3).

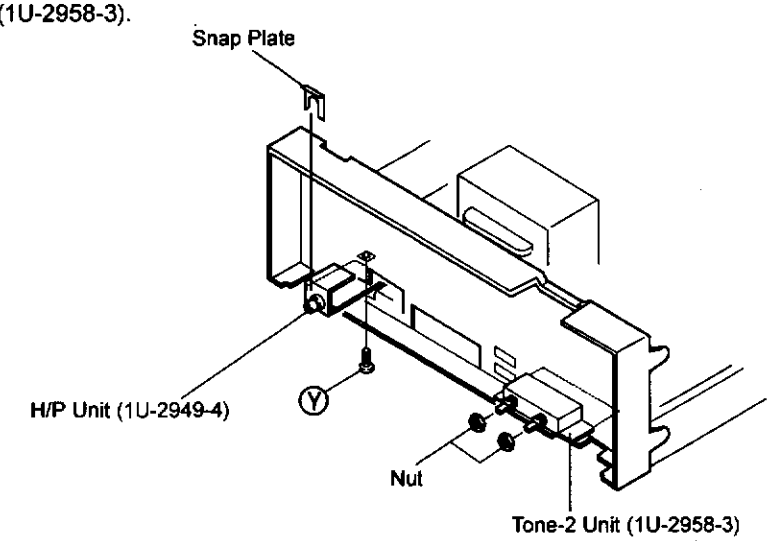

LEVEL DIAGRAM

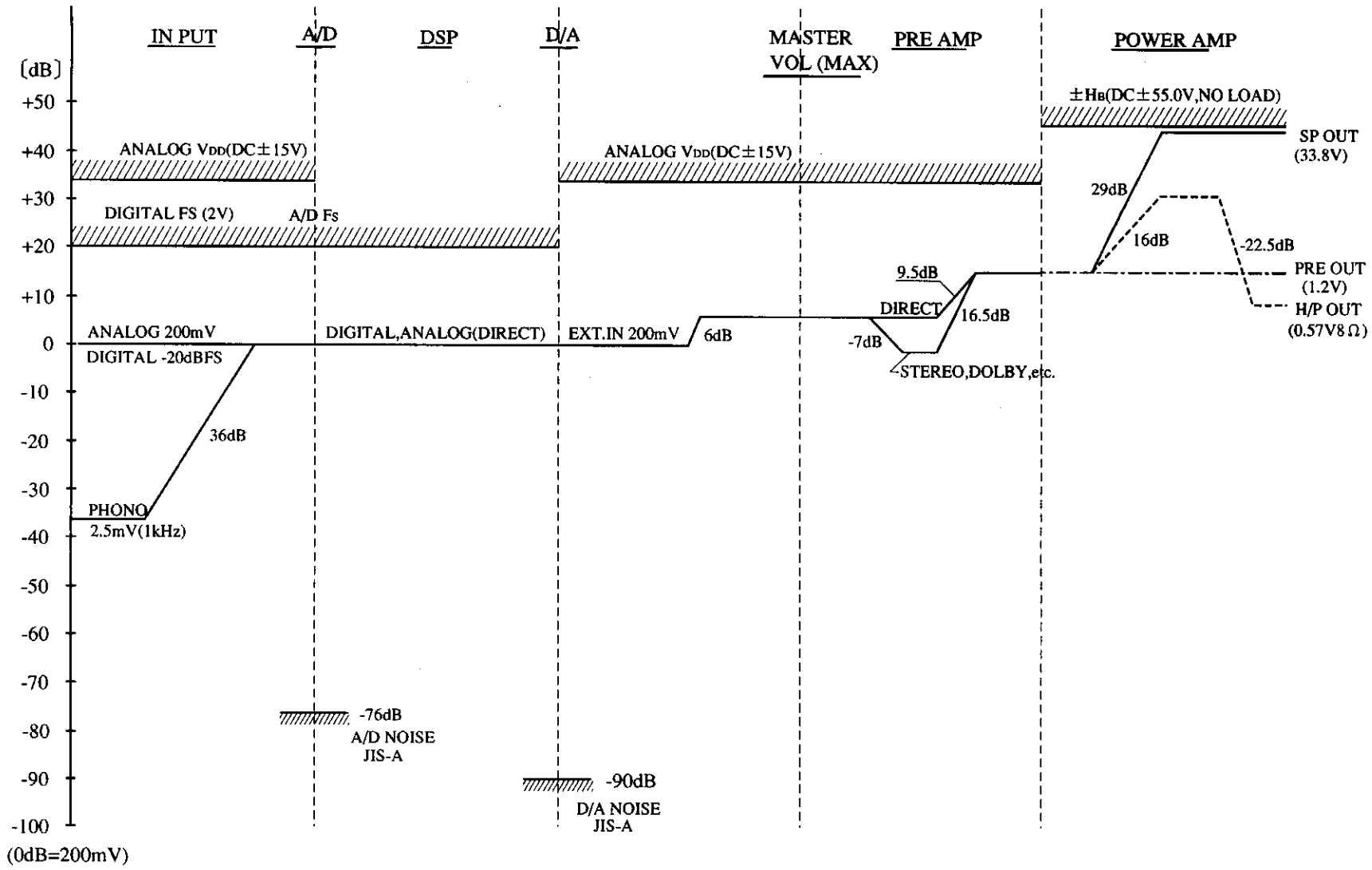

TMP87CS71F-6519 (IC401) Terminal Function

Pin No.	Port Name	Symbol	I/O	Type	Op	Det	Res	Ini	Function
1	P10/INT 0	PROTECTION IN	I	—	Eu	E&L	Z	H	Protection detecting input. (H: Detection)
2	P11/INT 1	DSP CLK IN	I	—	Eu	Ed	Z	H	DSP control terminal.
3	P12/INT 2	NC	O	C	—	—	Z	L	No connection.
4	P13/DVO	NC	O	C	—	—	Z	L	No connection.
5	P14	NC	O	C	—	—	Z	L	No connection.
6	P15/TC2	NC	O	C	—	—	Z	L	No connection.
7	P16	NC	O	C	—	—	Z	L	No connection.
8	P17	NC	O	C	—	—	Z	L	No connection.
9	TEST	TEST	I	—	GND	S	—	—	Connect to ground.
10	P21/XTIN	NC	O	N	—	—	Z	L	No connection.
11	P22/XTO	SCL	O	N	Eu	—	Z	H	MAIN-SUB microcomputer communication control terminal.
12	RESET	RESET	I	—	Eu	Lv	L	—	Reset input.
13	XIN	XIN	I	—	—	—	—	—	Oscillator circuit terminal. (4MHz)
14	XOUT	XOUT	O	—	—	—	—	—	Oscillator circuit terminal. (4MHz)
15	VSS	Vss	I	—	GND	—	—	—	Ground.
16	P20/INT 5	POWER OFF	I	—	Eu	Lv	Z	—	Power OFF detection terminal. (L: Power OFF)
17	P30/INT 3	REMOCON	I	—	Eu	E&L	Z	—	Remote signal input.
18	P31/TC4	SDA	O	N	Eu	S	Z	H	MAIN-SUB microcomputer communication control terminal.
19	P32/SCK	NC	O	N	—	—	Z	L	No connection.
20	P33/SI	NC	O	N	—	—	Z	L	No connection.
21	P34/SO	NC	O	N	—	—	Z	L	No connection.
22	P35/HSCK	OSD CLK	O	N	Eu	S	Z	H	OSD control output. (M35015)
23	P36	OSD CS	O	N	Eu	—	Z	H	OSD control output. (M35015)
24	P37/HSO	OSD DATA	O	N	Eu	S	Z	L	OSD control output. (M35015)
25	P00	OSD RES	O	C	—	—	Z	H	OSD control output. (M35015)
26	P01	FRONT	O	C	—	—	Z	H	Front SP out relay control output. (L: Mute)
27	P02	CENTER	O	C	—	—	Z	H	Center SP out relay control output. (L: Mute)
28	P03	REAR	O	C	—	—	Z	H	Rear SP out relay control output. (L: Mute)
29	P04	LED CK	O	C	—	S	Z	H	LED control terminal. (M66313)
30	P05	LED DATA	O	C	—	S	Z	H	LED control terminal. (M66313)
31	P06	LED LE	O	C	—	—	Z	H	LED control terminal. (M66313)
32	P07	LED OE	O	C	—	—	Z	H	LED control terminal. (M66313)
33	VDD	VDD	I	—	—	—	—	—	Connect to +5V power supply.
34	P60	VOL MUTE	O	P	Id	—	L	L	Control signal at minus infinite of master volume. (H: infinite)
35	P61	AC-3 RF DET.	I	—	—	—	L	L	AC-3 RF signal judgment input. (L: AC-3 data input)
36	P62	E. VOL CE2	O	P	Id	—	L	L	Master volume control output. (LC7536) (Center/Sub woofer, Rear L/R)
37	P63	E. VOL CE1	O	P	Id	—	L	L	Master volume control output. (LC7536) (Front L/R)
38	P64	E. VOL DATA	O	P	Id	—	L	H	Electronic volume control output. (LC7536)
39	P65	E. VOL CK	O	P	Id	—	L	H	Electronic volume control output. (LC7536)
40	P66	IN VOL ST	O	P	Id	—	L	L	Input volume control output. (TC9299)
41	P67	A/D RES	O	P	Id	—	L	L	A/D control terminal. (L: Reset and analog input)
42	P70	SEL	O	P	Id	—	L	H	DIR control terminal. (CS8412)
43	P71	SELCK	O	P	Id	—	L	H	DIR control terminal. (CS8412) (H: Digital, L: Analog)
44	P72	AC-3 MUTE	O	P	Id	—	L	H	Digital mute control terminal. (L: AC-3)
45	P73	FL RES	O	P	Id	—	L	L	Fluorescent display control output. (MSC1937)
46	P74	FL DATA	O	P	Id	S	L	H	Fluorescent display control output. (MSC1937)
47	P75	FL CLK	O	P	Id	S	L	H	Fluorescent display control output. (MSC1937)
48	P76	DSF1	O	P	Id	—	L	H	Emphasis control terminal.
49	P77	NC	O	P	Id	—	L	H	No connection.
50	P80	STANDBY LED	O	P	Id	—	L	H	Standby indication LED drive output. (H: Lighting)
51	P81	FRONT	O	P	Id	—	L	H	Front PRE out relay control output. (L: Mute)
52	P82	CENTER	O	P	Id	—	L	L	Center PRE out relay control output. (L: Mute)
53	P83	REAR	O	P	Id	—	L	L	Rear PRE out relay control output. (L: Mute)
54	P84	MULTI	O	P	Id	—	L	L	MULTI PRE out relay control output. (L: Mute)
55	P85	SUBWOOFER	O	P	Id	—	L	L	MONO PRE out relay control output. (L: Mute)
56	P86	H/P	O	P	Id	—	L	H	H/P PRE out relay control output. (L: Mute)
57	P87	POWER	O	P	Id	—	L	H	Power supply relay control output. (H: ON)
58	P90	OVL	I	—	—	—	L	—	Over load detecting input. (H: Over load)
59	P91	AC-3 DET.	I	—	—	—	L	—	AC-3 decode data input terminal. (L: AC-3 decode)
60	P92	F0	I	—	—	—	L	—	DIR control input terminal. (CS8412)
61	P93	F1	I	—	—	—	L	—	DIR control input terminal. (CS8412)
62	P94	F2	I	—	—	—	L	—	DIR control input terminal. (CS8412)
63	P95	CSI	I	—	—	—	L	—	DIR control input terminal. (CS8412) (H: PCM)
64	P96	ERR	I	—	—	—	L	—	DIR control input terminal. (CS8412) (H: ERR)
65	P97	DSF2	O	P	Id	—	L	L	Emphasis control terminal.
66	VKK	VKK	I	—	—	—	—	—	Connect to ground.
67	P40/KEY0	S-MONITOR DET.	I	—	Eu	Lv	Z	—	Judgment whether S monitor is connected or not. (L: Connecting)
68	P41/KEY1	S-SIGNAL DET.	I	—	Eu	Lv	Z	—	S signal input control. (H: S signal input)
69	P42/KEY2	OSD SYNC DET.	I	—	Eu	Lv	Z	—	OSD sync switching signal. (H: External sync)
70	P43/KEY3	MVOL SELA	I	—	Eu	Lv	Z	H	Master volume setting signal. (Rotary encode)
71	P44/KEY4	MVOL SELB	I	—	Eu	Lv	Z	H	Master volume setting signal. (Rotary encode)
72	P45/KEY5	H/P DET.	I	—	Eu	Lv	Z	L	H/P input detection signal. (H: Detecting)
73	P46/CIN5	MODE	I	—	Eu	Lv	Z	—	Export country mode switching input.
74	P47/CIN4	KEY5	I	—	Eu	Lv	Z	H	Key input 5.
75	P50/CIN3	KEY4	I	—	Eu	Lv	Z	H	Key input 4.
76	P51/CIN2	KEY3	I	—	Eu	Lv	Z	H	Key input 3.
77	P52/CIN1	KEY2	I	—	Eu	Lv	Z	H	Key input 2.
78	P53/CIN0	KEY1	I	—	Eu	Lv	Z	H	Key input 1.
79	P54	SUB SYNC 1	I	—	Eu	Lv	Z	H	SUB microcomputer sync input.
80	P55/PMW	SO/ZORAN	I	—	Eu	Lv	Z	H	DSP data input terminal. (ZR38500)

NOTE:

Pin No. : Terminal number of microcomputer.
Port Name : The name entered in the data sheet of microcomputer.
Symbol : Symbolized interface function.
I/O : Input or out of part.
- "I" = Input port
- "O" = Output port

Type : Composition of port in case of output port.
- "C" = CMOS output
- "N" = NMOS open drain output
- "P" = PMOS open drain output

Op : Pull up/Pull down selection information.
- "Iu" = Inner microcomputer pull up
- "Id" = Inner microcomputer pull down
- "Eu" = External microcomputer pull up
- "Ed" = External microcomputer pull down

Det : Indicates judging state of input port. Level detection is "LV"; Edge detection is "Ed"; Detection by both shifting is "E&L"; Serial data detection is "S" (Serial data output is also "S").
Res : State at reset.
- "H" = Outputs High Level at reset
- "L" = Outputs Low Level at reset
- "Z" = Becomes High impedance mode at reset

Ini : Initial output state.
Function : Function and logical level explanation of signals to be interface.

TMP87CP71AF-6520 (IC402) Terminal Function

Pin No.	Port Name	Symbol	I/O	Type	Op	Det	Res	Ini	Function
1	P10/INT 0	DEMOD RES	O	C	—	—	Z	H	Demodulator reset control terminal. (L: Reset)
2	P11/INT 1	DEMOD POWER	O	C	—	—	Z	L	Demodulator power ON/OFF control terminal. (H: ON)
3	P12/INT 2	A/D POWER	O	C	—	—	Z	H	A/D converter power ON/OFF control terminal. (H: ON)
4	P13/DVO	CINEMA EQ	O	C	—	—	Z	L	Cinema EQ signal. (H: ON)
5	P14	DISCHARGE	O	C	—	—	Z	H	Pop noise prevention control terminal. (H: Power ON)
6	P15/TC2	NC	O	C	—	—	Z	L	No connection
7	P16	NC	O	C	—	—	Z	H	No connection
8	P17	NC	O	C	—	—	Z	L	No connection
9	TEST	TEST	I	—	GND	—	—	—	Connect to ground.
10	P21/XTIN	SUB SYNC1	O	N	Eu	—	Z	H	SUB microcomputer sync output.
11	P22/XTO	TONE	O	N	Eu	—	Z	L	Tone control terminal. (L: Direct, test tone ON)
12	RESET	RESET	I	—	Eu	Lv	L	—	Reset input.
13	XIN	XIN	I	—	—	—	—	—	Oscillator circuit terminal. (4 MHz)
14	XOUT	XOUT	O	—	—	—	—	—	Oscillator circuit terminal. (4 MHz)
15	VSS	VSS	I	—	GND	—	—	—	Ground.
16	P20/INT 5	POWER OFF	I	—	Eu	Lv	Z	—	Power OFF detection terminal. (L: Power OFF)
17	P30/INT 3	NC	I	—	Eu	S	Z	L	No connection
18	P31/TC4	CFG ST	O	N	Eu	S	Z	H	Speaker configuration SW (NJU7313AL) control terminal.
19	P32/SCK	SCL	I	—	Eu	S	Z	—	MAIN-SUB microcomputer communication control terminal.
20	P33/SI	SDA	I	—	Eu	S	Z	—	MAIN-SUB microcomputer communication control terminal.
21	P34/SO	CFG DATA	O	N	Eu	S	Z	H	Speaker configuration SW (NJU7313AL) control terminal.
22	P35/HSCK	DSP CLK	O	N	Eu	S	Z	H	DSP control terminal. (ZR38500)
23	P36	ZORAN SS	O	N	Eu	—	Z	H	DSP control terminal. (ZR38500)
24	P37/HSO	DSP DATA	O	N	Eu	S	Z	H	DSP control terminal. (ZR38500)
25	P00	CFG CLK	O	C	—	—	Z	H	Speaker configuration SW (NJU7313AL) control terminal.
26	P01	DSP RES(ZORAN)	O	C	—	—	Z	H	DSP control terminal. (ZORAN) (L: Reset)
27	P02	FUNC ST4	O	C	—	—	Z	L	Function control output (NJU7313AL) Hi-vision.
28	P03	FUNC ST3	O	C	—	—	Z	L	Function control output (TC9273) REC INH.
29	P04	FUNC ST2	O	C	—	—	Z	L	Function control output (TC9273) REC OUT.
30	P05	FUNC ST1	O	C	—	—	Z	L	Function control output (TC9274N) INPUT.
31	P06	FUNC DATA	O	C	—	S	Z	L	Function control output (TC9274N, NJU7313AL).
32	P07	FUNC CK	O	C	—	S	Z—	L	Function control output (TC9274N, NJU7313AL).
33	VDD	VDD	I	—	—	—	Z	—	Connect to +5V power supply.
34	P60	VIN A	O	P	Id	—	L	L	Video input control. (TC4051)
35	P61	VIN B	O	P	Id	—	L	L	Video input control. (TC4051)
36	P62	VIN C	O	P	Id	—	L	L	Video input control. (TC4051)
37	P63	VREC A	O	P	Id	—	L	L	Video output control. (TC4051)
38	P64	VREC B	O	P	Id	—	L	L	Video output control. (TC4051)
39	P65	VREC C	O	P	Id	—	L	L	Video output control. (TC4051)
40	P66	VINH 1	O	P	Id	—	L	L	Video output inhibit control. (HD14066)
41	P67	VINH 2	O	P	Id	—	L	L	Video output inhibit control. (HD14066)
42	P70	LIMIT	O	P	Id	—	L	L	Limiter control.
43	P71	$\overline{S1}$	O	P	Id	—	L	—	Video signal switching control output.
44	P72	S1	O	P	Id	—	L	—	Video signal switching control output.
45	P73	S2	O	P	Id	—	L	—	Video signal switching control output.
46	P74	NC	O	P	Id	—	L	H	No connection
47	P75	G 2	O	P	Id	—	L	—	LED display digit control signal.
48	P76	G 1	O	P	Id	—	L	—	LED display digit control signal.
49	P77	G 0	O	P	Id	—	L	—	LED display digit control signal.
50	P80	S (a)	O	P	Id	—	L	—	LED display segment control signal.
51	P81	S (b)	O	P	Id	—	L	—	LED display segment control signal.
52	P82	S (c)	O	P	Id	—	L	—	LED display segment control signal.
53	P83	S (d)	O	P	Id	—	L	—	LED display segment control signal.
54	P84	S (e)	O	P	Id	—	L	—	LED display segment control signal.
55	P85	S (f)	O	P	Id	—	L	—	LED display segment control signal.
56	P86	S (g)	O	P	Id	—	L	—	LED display segment control signal.
57	P87	S (h)	O	P	Id	—	L	—	LED display segment control signal.
58	P90	NC	I	—	Id	—	L	L	No connection
59	P91	DSP POWER	O	P	Id	—	L	L	DSP power supply control output. (H: ON)
60	P92	DIN A	O	P	Id	—	L	L	Digital input control terminal. (TC74HC151)
61	P93	DIN B	O	P	Id	—	L	L	Digital input control terminal. (TC74HC151)
62	P94	DIN C	O	P	Id	—	L	L	Digital input control terminal. (TC74HC151)
63	P95	NC	I	—	Id	—	L	L	No connection
64	P96	NC	I	—	Id	—	L	L	No connection
65	P97	NC	I	—	Id	—	L	L	No connection
66	VKK	GND	I	—	—	—	—	—	Connect to ground.
67	P40/KEY0	NC	I	—	—	—	Z	L	No connection
68	P41/KEY1	NC	I	—	—	—	Z	L	No connection
69	P42/KEY2	NC	I	—	—	—	Z	L	No connection
70	P43/KEY3	NC	I	—	—	—	Z	L	No connection
71	P44/KEY4	NC	I	—	—	—	Z	L	No connection
72	P45/KEY5	NC	I	—	—	—	Z	L	No connection
73	P46/CIN5	NC	I	—	—	—	Z	L	No connection
74	P47/CIN4	NC	I	—	—	—	Z	L	No connection
75	P50/CIN3	NC	I	—	—	—	Z	L	No connection
76	P51/CIN2	NC	I	—	—	—	Z	L	No connection
77	P52/CIN1	NC	I	—	—	—	Z	L	No connection
78	P53/CIN0	NC	I	—	—	—	Z	L	No connection
79	P54	NC	I	—	—	—	Z	L	No connection
80	P55/PMW	NC	I	—	—	—	Z	L	No connection

NOTE:

Pin No. : Terminal number of microcomputer.
Port Name : The name entered in the data sheet of microcomputer.
Symbol : Symbolized interface function.
I/O : Input or out of part.
"I" = Input port
"O" = Output port
Type : Composition of port in case of output port.
"C" = CMOS output
"N" = NMOS open drain output
"P" = PMOS open drain output
Op : Pull up/Pull down selection information.
"Iu" = Inner microcomputer pull up
"Id" = Inner microcomputer pull down
"Eu"= External microcomputer pull up
"Ed"= External microcomputer pull down
Det : Indicates judging state of input port. Level detection is "LV"; Edge detection is "Ed"; Detection by both shifting is "E&L"; Serial data detection is "S" (Serial data output is also "S").
Res : State at reset.
"H" = Outputs High Level at reset
"L" = Outputs Low Level at reset
"Z" = Becomes High impedance mode at reset
Ini : Initial output state.
Function : Function and logical level explanation of signals to be interface.

PRINTED WIRING BOARD

1 2 3 4 5 6 7 8

A B C D E

1U-2948 AUDIO IN UNIT ASS'Y

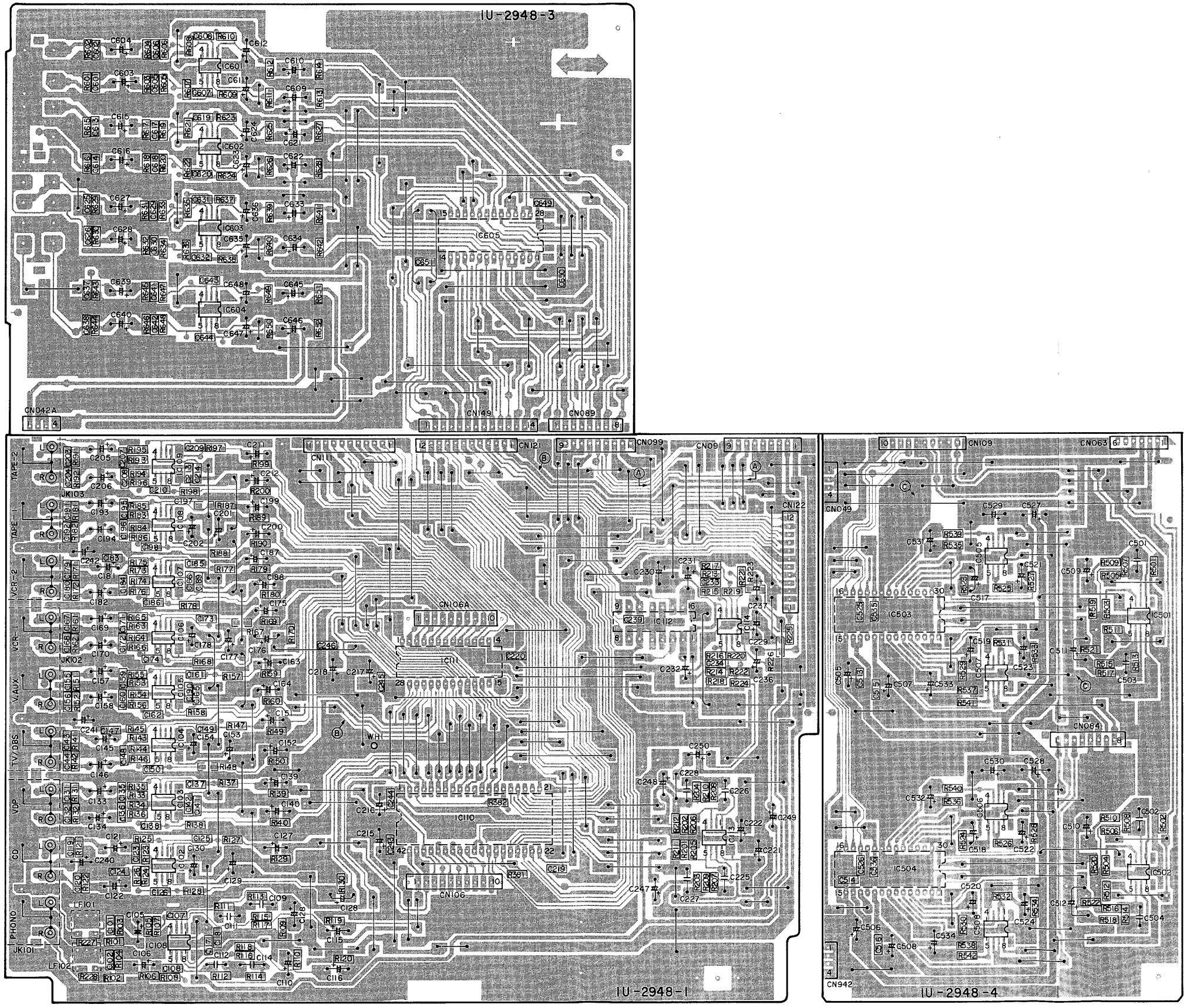

1U-2949 PREAMP. UNIT ASS'Y

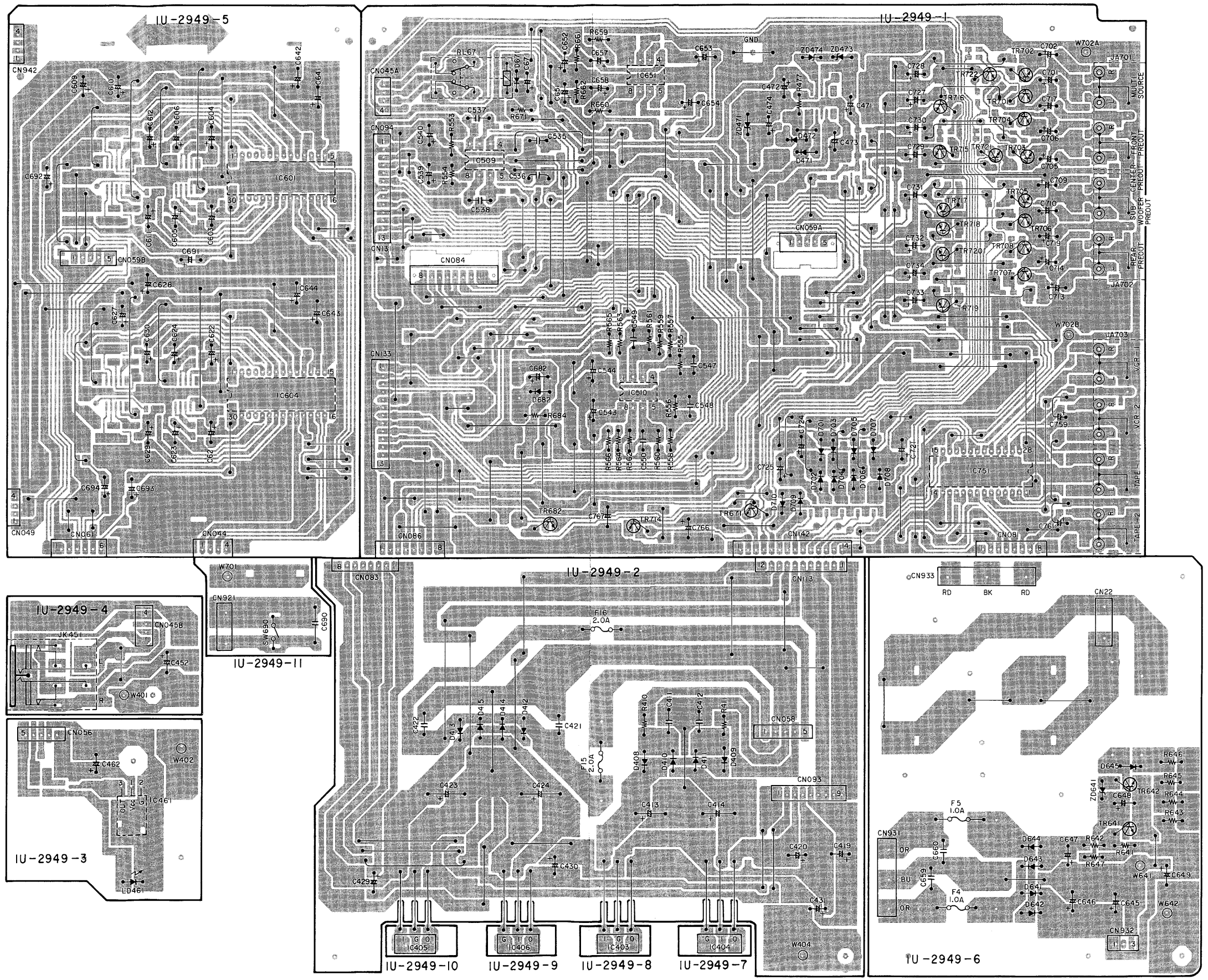

1 2 3 4 5 6 7 8

A B C D E

1U-2951 S-VIDEO UNIT ASS'Y

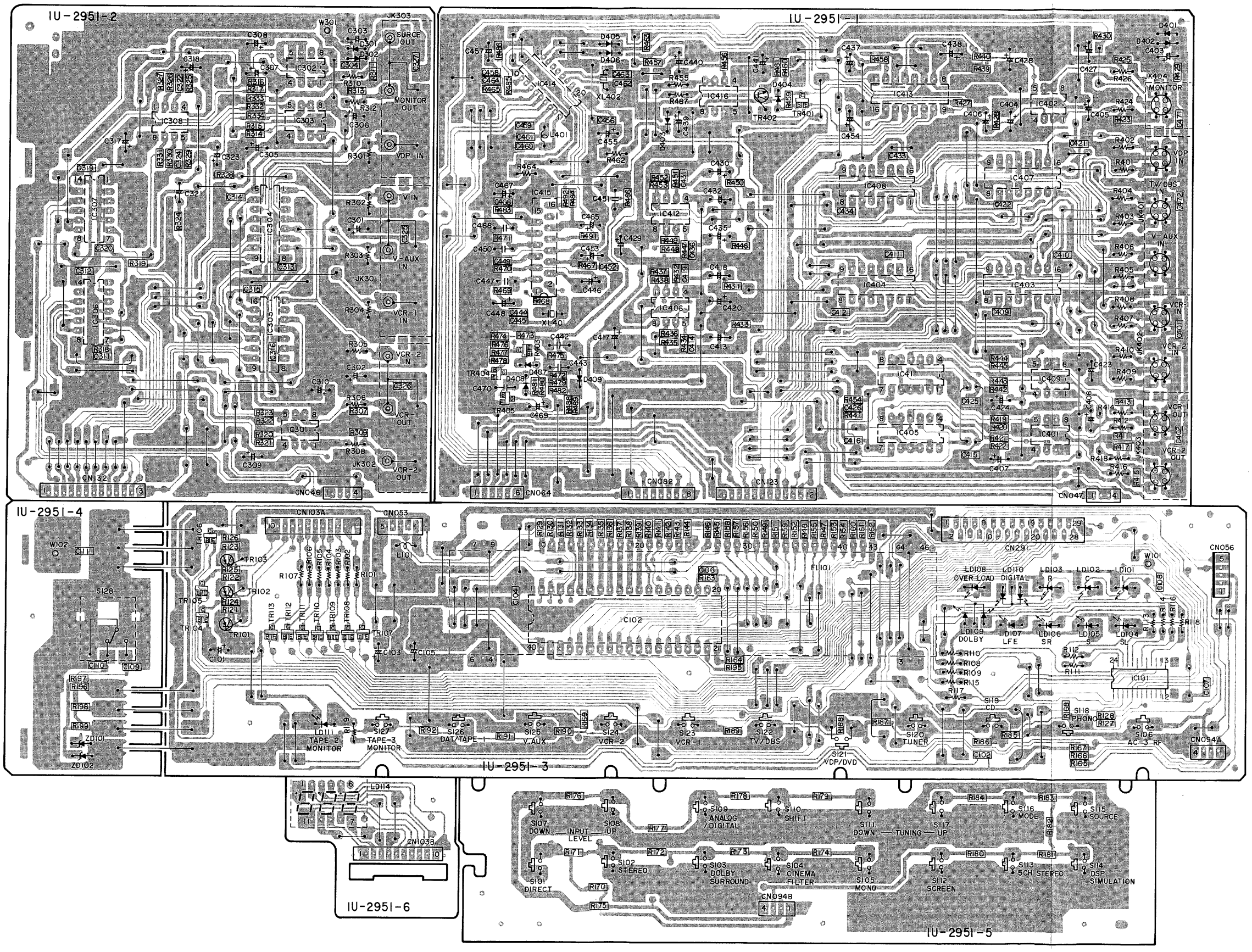

1U-2952 POWER AMP.-1 UNIT ASS'Y

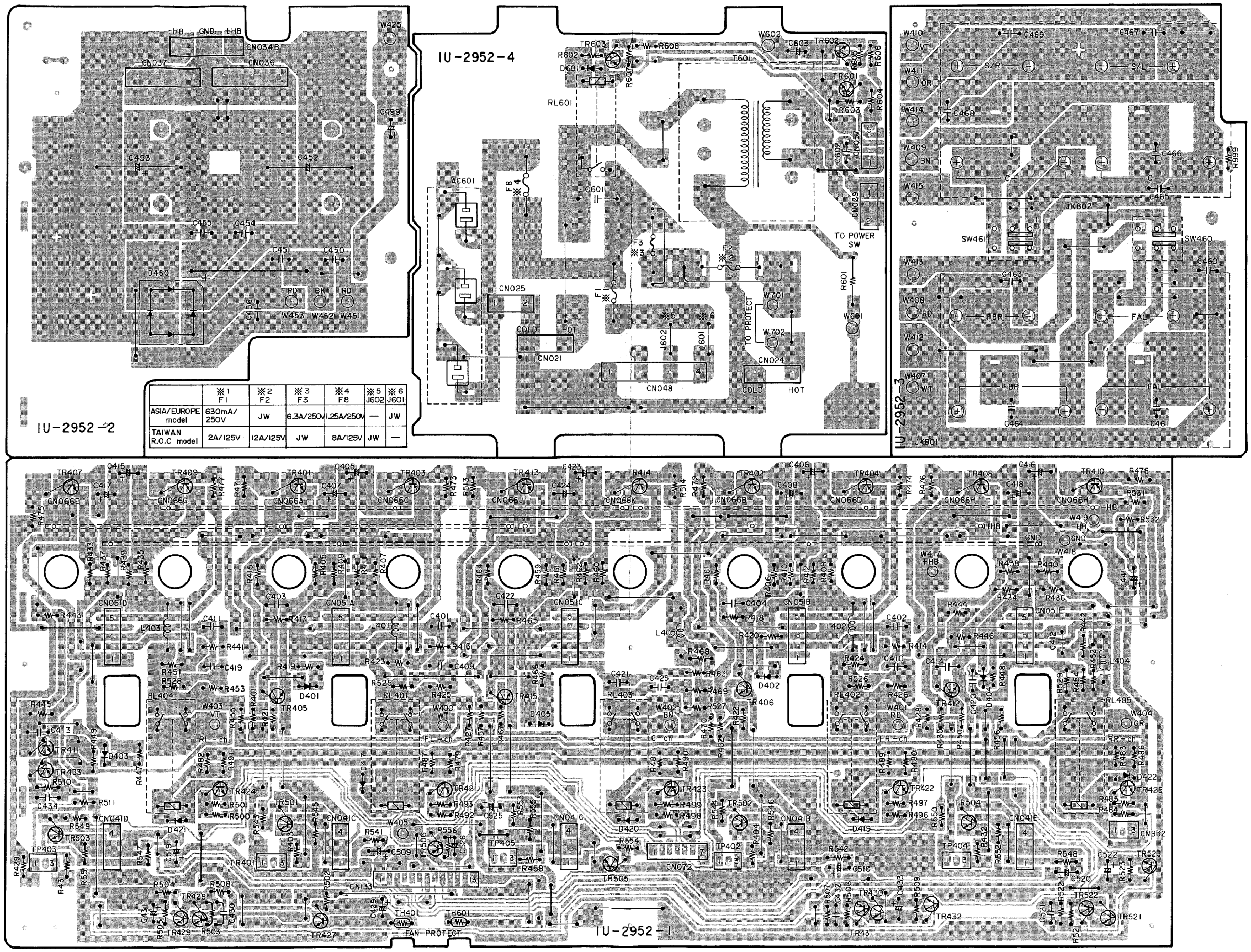

	※1 F1	※2 F2	※3 F3	※4 F8	※5 J602	※6 J601
ASIA/EUROPE model	630mA/ 250V	JW	6.3A/250V	1.25A/250V	—	JW
TAIWAN R.O.C model	2A/125V	12A/125V	JW	8A/125V	JW	—

1U-2958 POWER SUPPLY-3 UNIT ASS'Y

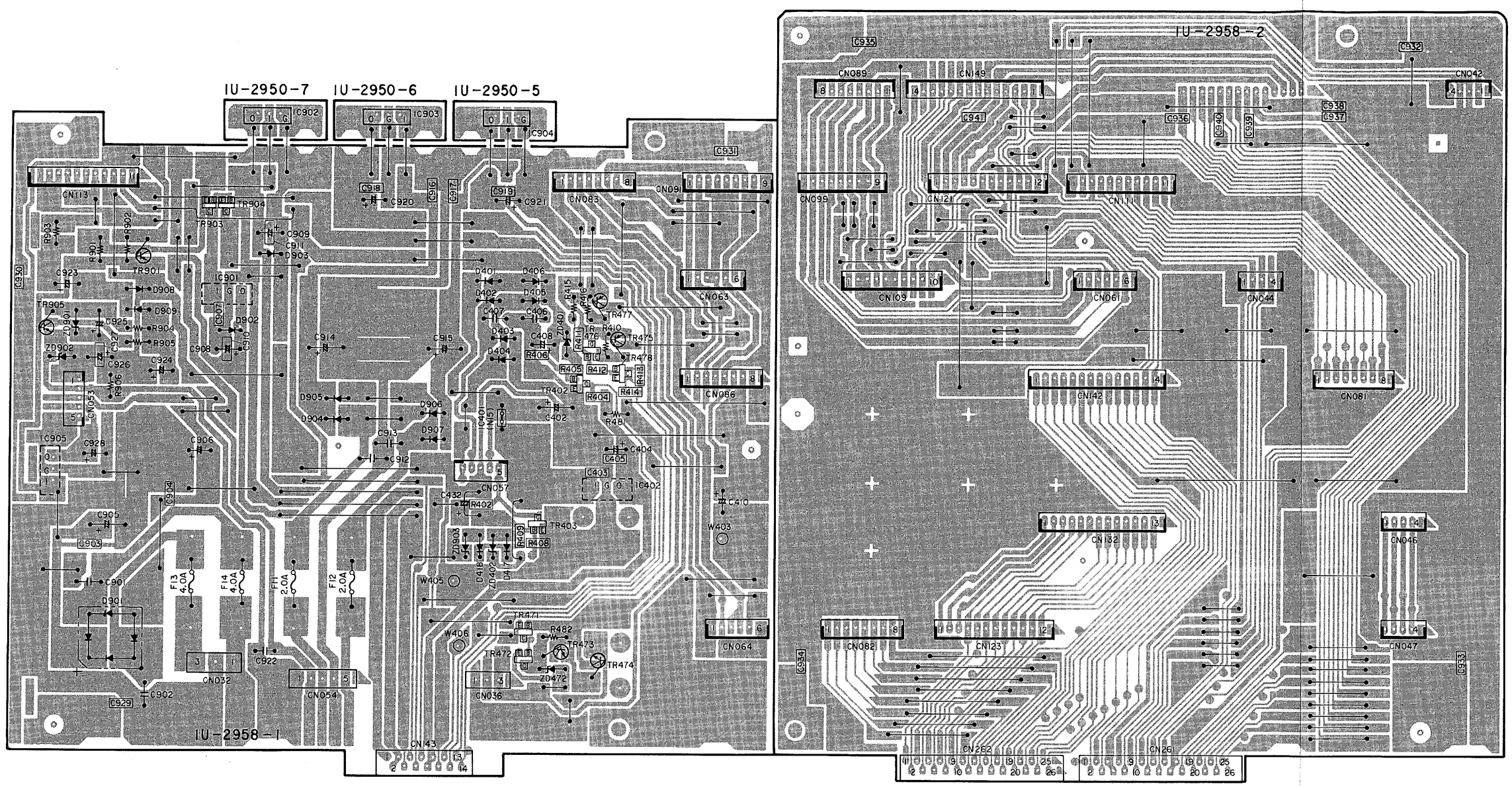

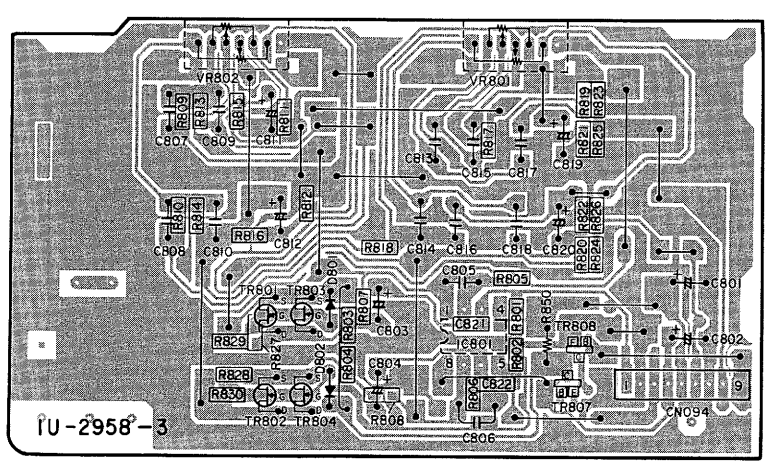

1U-2944 POWER AMP.-2 UNIT ASS'Y

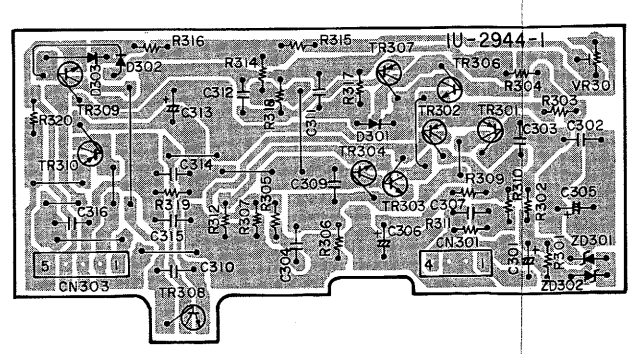

1 2 3 4 5 6 7 8

A B C D E

1U-2959 DSP UNIT ASS'Y

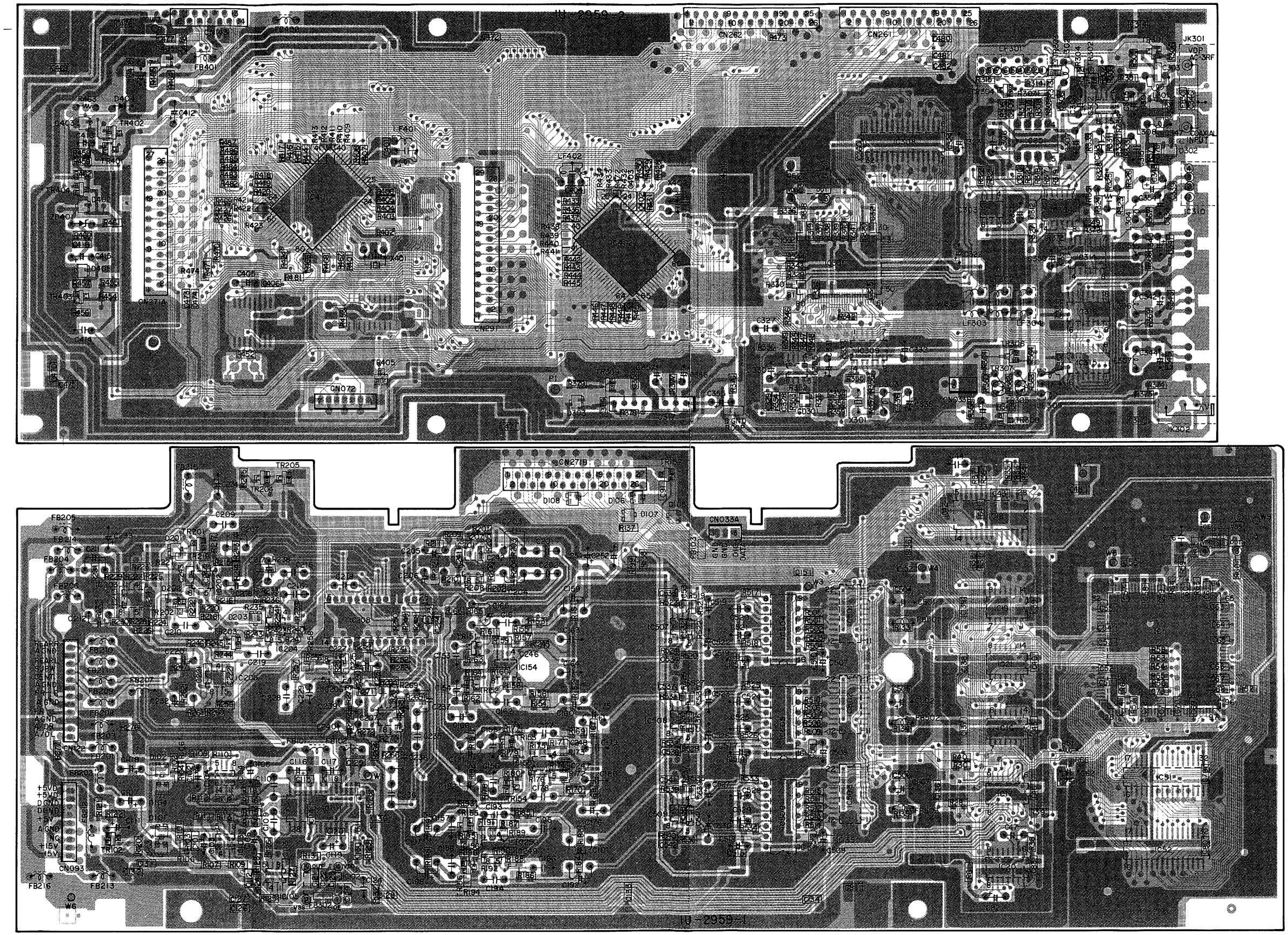

Ref. No.	Part No.	Part Name	Remarks
C329	257 0010 900	Ceramic chip 0.01 µF/50V	CK73B1H103K
C330,331	254 4260 948	Electrolytic 1 µF/50V	CE04W1H010M
C332	254 4254 909	Electrolytic 10 µF/16V	CE04W1C100M
C333	257 0012 966	Ceramic chip 0.01 µF/50V	CK73F1H103Z
C334	257 0010 900	Ceramic chip 0.01 µF/50V	CK73B1H103K
C335	254 4252 930	Electrolytic 100 µF/10V	CE04W1A101M
C336	257 0002 963	Ceramic chip 15 pF/50V	CC73SL1H150J
C338	254 4254 938	Electrolytic 47 µF/16V	CE04W1C470M
C339	257 0014 935	Ceramic chip 0.1 µF/25V	CK73F1E104Z
C346	257 0012 966	Ceramic chip 0.01 µF/50V	CK73F1H103Z
C348	257 0012 966	Ceramic chip 0.01 µF/50V	CK73F1H103Z
C349	257 0003 904	Ceramic chip 22 pF/50V	CC73SL1H220J
C350	254 4254 909	Electrolytic 10 µF/16V	CE04W1C100M
C351,352	257 0012 966	Ceramic chip 0.01 µF/50V	CK73F1H103Z
C354	254 4256 923	Electrolytic 33 µF/25V	CE04W1E330M
C355,356	254 4260 948	Electrolytic 1 µF/50V	CE04W1H010M
C357	254 4260 964	Electrolytic 3.3 µF/50V	CE04W1H3R3M
C358	257 0005 986	Ceramic chip 330 pF/50V	CC73SL1H331J
C359	257 0014 935	Ceramic chip 0.1 µF/25V	CK73F1E104Z
C360	257 0012 966	Ceramic chip 0.01 µF/50V	CK73F1H103Z
C401	257 0014 935	Ceramic chip 0.1 µF/25V	CK73F1E104Z
C404	257 0014 935	Ceramic chip 0.1 µF/25V	CK73F1E104Z
C412	254 4254 909	Electrolytic 10 µF/16V	CE04W1C100M
C413	254 4250 932	Electrolytic 220 µF/6.3V	CE04W0J221M
C414	256 1034 982	Metalized 0.12 µF/50V	CF93A1H124J
C415	254 4254 909	Electrolytic 10 µF/16V	CE04W1C100M
C416	257 0012 966	Ceramic chip 0.01 µF/50V	CK73F1H103Z
C417	259 0007 702	Back up cap. 8200 µF	SB CAP==822=C
C418	257 0012 966	Ceramic chip 0.01 µF/50V	CK73F1H103Z
C472	257 0012 966	Ceramic chip 0.01 µF/50V	CK73F1H103Z
C473,474	257 0008 983	Ceramic chip 1000 pF/50V	CK73B1H102K
C476~482	257 0008 983	Ceramic chip 1000 pF/50V	CK73B1H102K
C501~503	254 4193 905	Electrolytic 10 µF/16V	CE04W1C100M (SRA)
C504,506	257 0012 966	Ceramic chip 0.01 µF/50V	CK73F1H103Z
C507~509	254 4193 905	Electrolytic 10 µF/16V	CE04W1C100M (SRA)
C510~515	257 0012 966	Ceramic chip 0.01 µF/50V	CK73F1H103Z
C516~518	254 4193 905	Electrolytic 10 µF/16V	CE04W1C100M (SRA)
C519~530	254 4252 930	Electrolytic 100 µF/10V	CE04W1A101M
C531~542	257 0004 961	Ceramic chip 100 pF/50V	CC73SL1H101J

OTHER PARTS GROUP				Q'ty
CN033	205 0343 032	3P connector base(KR-PH)		2
CN072	205 0343 074	7P connector base(KR-PH)		1
CN093	205 0343 090	9P connector base(KR-PH)		1
CN122	205 0375 026	12P connector base(KR-PH)		1
CN143	205 1032 012	14P connector plug TRC-X		1
CN261,262	205 1032 009	26P connector plug TRC-X		2

Ref. No.	Part No.	Part Name	Remarks	Q'ty
CN271	205 0815 023	27P FFC base(BTM)		1
CN271	205 0702 084	27P FFC connector base(L)		1
CN291	205 0815 036	29P FFC base(BTM)		1
FB101,102	235 0049 900	Beads inductor		2
FB103	235 0106 908	Chip emifil (21A05)		1
FB201~203	235 0049 900	Beads inductor		3
FB204~207	235 0049 900	Beads inductor		3
FB208~211	235 0049 900	Beads inductor		4
FB212~215	235 0049 900	Beads inductor		4
FB216	235 0049 900	Beads inductor		1
FB301	235 0106 908	Chip emifil (21A05)		1
FB302	235 0106 908	Chip emifil (21A05)		1
FB401,402	235 0049 900	Beads inductor		2
JK301	204 8357 030	2P pin jack		1
JK302	204 8260 004	Mini jack		1
L301	235 0060 905	Inductor 2.2 µH		1
L302	235 0070 953	Inductor 68 µH		1
L303,304	235 0060 918	Inductor 4.7 µH		2
L308	235 0060 905	Inductor 2.2 µH		1
LF301	261 0152 003	Band pass filter 2.88M BPF(5VLT)		1
LF302~305	235 0048 901	EMI filter (103)TP		4
LF401,402	235 0048 901	EMI filter (103)TP		2
W002	203 0526 073	1P contact Ass		1
X301	399 0311 000	Crystal (18.432MHZ)		1
X401,402	399 0191 903	Ceramic resonator		2
		CST4.00MGW-TF01		

PARTS LIST OF EXPLODED VIEW

(BLACK MODEL)

Ref. No.	Part No.	Part Name	Remarks	Q'ty
1	1U-2944	Power amp.P.W.B. unit-2		1s
2	1U-2948-1	Audio in P.W.B. unit		1s
2-1	1U-2948-3	Ext. in P.W.B. unit		(1)
2-2	1U-2948-4	Volume-1 P.W.B.unit		(1)
3	1U-2949-1	Pre amp.P.W.B.unit		1s
3-1	1U-2949-2	Power supply-2 P.W.B.unit		(1)
3-2	1U-2949-3	Remocon P.W.B.unit		(1)
3-3	1U-2949-4	Head phone P.W.B.unit		(1)
3-4	1U-2949-5	Volume-2 P.W.B.unit		(1)
3-5	1U-2949-6	Power supply-4 P.W.B. unit		(1)
3-6	1U-2949-11	Power switch P.W.B.unit		(1)
4	1U-2951-1	S-video P.W.B.unit		1s
4-1	1U-2951-2	C-video P.W.B.unit		(1)
4-2	1U-2951-3	Display P.W.B.unit		(1)
4-3	1U-2951-4	Master volume P.W.B.unit		(1)
4-4	1U-2951-5	Switch P.W.B.unit		(1)
4-5	1U-2951-6	Volume LED P.W.B.unit		(1)
5	1U-2952-1	Power amp.P.W.B.unit-2		1s
5-1	1U-2952-2	Power supply-1 P.W.B.unit		(1)
5-2	1U-2952-3	Speaker termial P.W.B.unit		(1)
5-3	1U-2952-4	Power supply-5 P.W.B.unit		(1)
6	1U-2958-1	Power supply-3 P.W.B.unit		1s
6-1	1U-2958-2	Wiring P.W.B.unit		(1)
6-2	1U-2958-3	Tone-2 P.W.B.unit		(1)
7	1U-2959-1	DSP P.W.B.unit		1s
7-1	1U-2959-2	Micon P.W.B.unit		(1)
8	411 1350 205	Front chassis		1
9	412 4160 000	Phone bracket		1
10	412 4161 106	Volume bracket		1
11	441 1793 009	Snap plate		1
12	412 2741 007	P.W.B.holder	H=8	1
13	412 2814 002	Card speacer	L=8	1
14	411 1349 203	Trance chassis		1
15	415 9032 006	P.C.B.holder (T)		1
16	445 0114 005	Wire clip		4
17	412 4148 006	P.W.B.bracket		1
18	411 1351 107	Side chassis (L)		1
19	411 1352 106	Side chassis (R)		1
20	412 2814 028	Card spacer	L=10	3
21	417 0538 000	Radiator		1
22	415 0234 007	Insulating sheet		1
23	412 4146 008	Radiator support (F)	FRONT	1
24	412 4147 007	Radiator support (R)	REAR	1
25	412 2814 028	Card spacer	L=10	2
26	414 0782 006	Shield bracket (TU)		1
27	412 2814 044	Card spacer	L=6	2
28	449 0133 004	P.W.B.holder		2
29	105 1209 464	Back panel		1
30	477 0018 001	Washer (P-87)		1
31	205 0071 016	Terminal Ass'y		1
32	105 1211 012	Back plate		1

Ref. No.	Part No.	Part Name	Remarks	Q'ty
35	412 4150 104	P.W.B.support		1
36	417 0537 111	Power radiator		1
37	272 0147 005	Transistor 2SB1317(S)		5
38	274 0184 006	Transistor 2SD1975(S)		5
39	412 4127 001	P.W.B bracet (B)		2
40	412 4144 107	Radiator bracket (F)		1
41	412 4145 106	Radiator bracket (R)		1
42	414 0784 208	Shield chassis (D)		1
43	144 2518 224	Front panel Ass'y		1
44	113 1791 009	Selector knob		11
45	412 4163 007	Switch bracket		1
46	113 1464 019	Push knob		2
47	412 2741 036	P.W.B.holder	H=10	1
48	449 0133 017	P.W.B.holder		1
49	105 1207 204	Bottom cover		1
50	104 0194 205	Foot Ass'y		4
51	—	—		
52	233 6209 007	Power trans (PRE)		1
53	412 4157 000	Trans bracket		1
54	233 6213 006	Power trans (E3)	Taiwan model	1
	233 6214 005	Power trans (E2)	Europe/Asia model	1
55	412 4151 006	Support bracket (A)		1
56	412 4152 005	Support bracket (B)		1
57	—	—		
58	102 0576 225	Top cover		1
59	112 0790 008	Knob Ass'y (M)		1
60	112 0685 100	Knob (MARU)		2
61	113 1792 008	Power knob Ass'y		1
62	461 0501 005	Rubber sheet		4
63	—	Asatate cross tape (360x20)	Sub-material	1
64	461 0539 051	Rubber sheet		1
65	461 0390 038	Rubber sheet		1
66	449 0133 017	P.W.B. holder		1
67	415 0680 033	Spacer		2
68	414 0797 004	Shield plate(A)		1
69	415 0680 020	Spacer		1
70	414 0798 003	Shield plate(B)		1
71	461 0315 039	Cushion sheet		1
72	414 0800 108	Shield plate		1
73	414 0799 109	Shield plate		1
74	415 0680 046	Spacer(119x85)		2
75	461 0501 005	Rubber sheet		2
76	445 8004 007	Wire clamper		17
77	203 3942 007	AC Outlet	Europe model	1
78	203 3970 008	AC Inlet	Europe/Asia model	1
	203 3962 003	AC Inlet	Taiwan model	
79	477 0096 007	Push rivet	Europe/Asia model	16
80	—	—		
81	449 0080 021	Edging		1
82	449 0080 063	Edging		2

Ref. No.	Part No.	Part Name	Remarks	Q'ty
SCREWS				
101	473 7015 018	Screw 3x8	CBTS (S)-B	71
102	473 7002 018	Screw 3x8	CBTS (S)-Z	54
103	473 7500 015	Screw 3x8	CBTS (P)-Z	3
104	473 7005 002	Screw 3x10	CBTS (S)-Z	7
105	473 8007 009	Cup screw 3x12		11
106	473 7007 000	Screw 4x8	CBTS (S)-B	4
107	473 7007 013	Screw 4x10	CBTS (S)-B	8
108	477 0064 107	Fixing screw		24
109	473 7505 007	Screw 2.6x8	CBTS (P)-Z	20
110	477 0263 005	3P swelling screw		10
111	473 7003 017	Screw 3x8	CFTS(S)-B	3
112	477 0276 018	Earth screw		1
113	473 7002 034	Screw 3x6	CBTS(S)-B	1
PACKING & ACCESORIES (Not included EXPLODED VIEW)				
121	GEN3653	Envelope sub. Ass'y		1
122	505 8006 019	Envelope		1
123	511 3016 009	Instructions manual	Europe model	1
123	511 3011 004	Instructions manual	Asia/Taiwan model	1
124	515 0671 300	Service station list		1
125	399 0332 005	Remote control	RC-820	1
126		Batteries		
127	206 2147 006	AC Cord with conn.	Europe/Asia model only	1
128	206 2148 005	AC Cord (BS3p)	Asia model only	1
129	206 2150 103	AC Cord with conn.	Taiwan model only	1
130				
131	504 9102 029	Styrene paper		1
132	505 9102 019	Poly cover		1
133	503 1225 008	Cushion (L)		1
134	503 1226 007	Cushion (R)		1
135	501 1932 023	Carton case	Europe model	1
135	501 1932 010	Carton case	Asia model	1
135	501 1932 023	Carton case	Taiwan model	1
136	503 1232 004	Cushion	Asia model	

(GOLD MODEL)

Ref. No.	Part No.	Part Name	Remarks	Q'ty
43	144 2518 337	Front panel Ass'y		1
44	113 1791 012	Selector knob		11
46	113 1464 006	Push knob		2
58	102 0576 238	Top cover		1
59	112 0790 011	Knob Ass'y (M)		1
60	112 0685 113	Knob (MARU)		2
61	114 0130 017	Power knob Ass'y		1
110	477 0263 018	3P swelling screw		10

(TAIWAN MODEL)

Ref. No.	Part No.	Part Name	Remarks	Q'ty
29	105 1209 448	Back panel		1
78	203 3962 003	AC Inlet		1
111	473 7002 021	Screw 3x8	CBTS(S)-B	2

EXPLODED VIEW OF CHASSIS AND CABINET

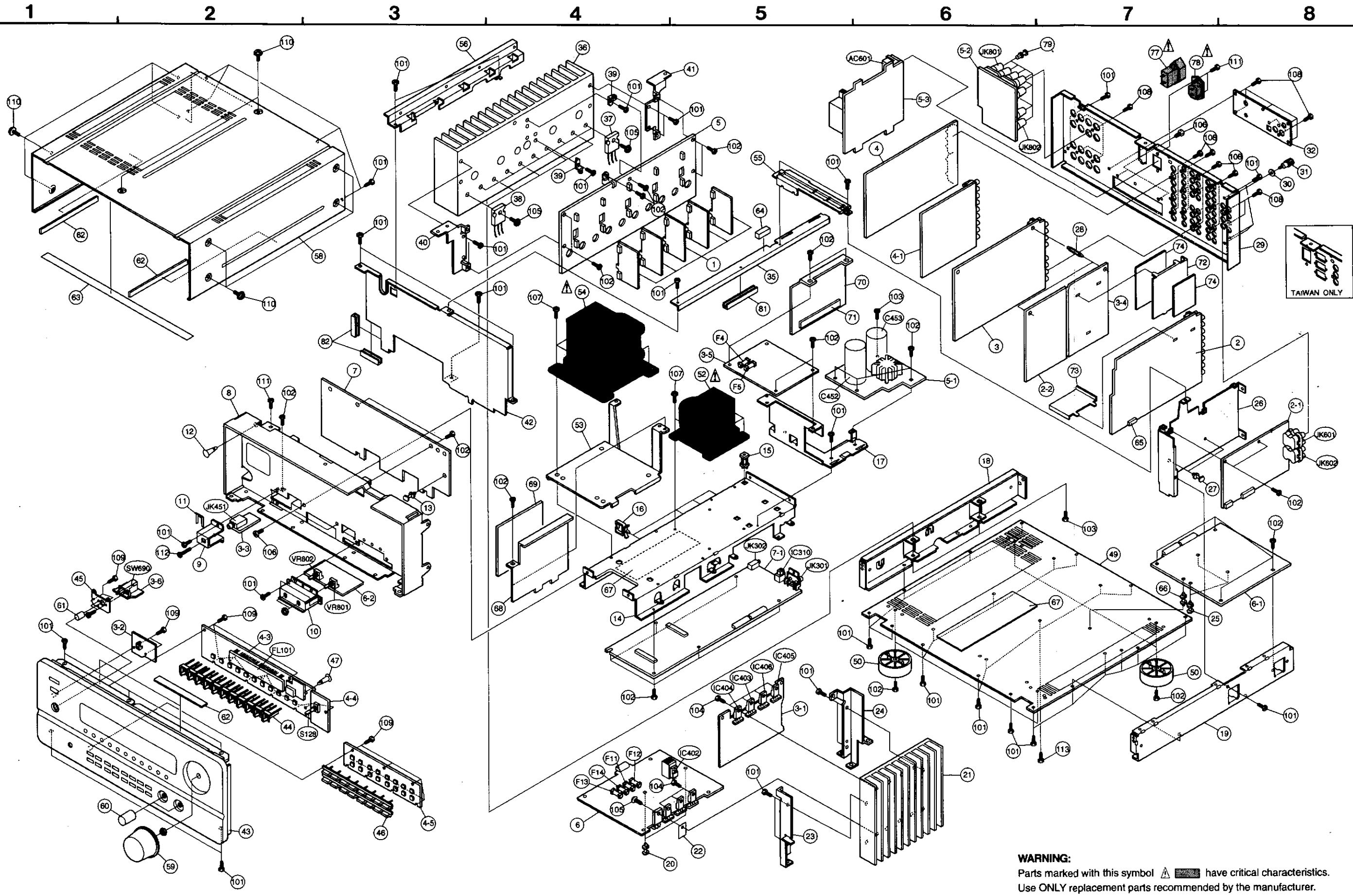

WARNING:
Parts marked with this symbol ⚠ ▒▒ have critical characteristics.
Use ONLY replacement parts recommended by the manufacturer.

BLOCK DIAGRAM

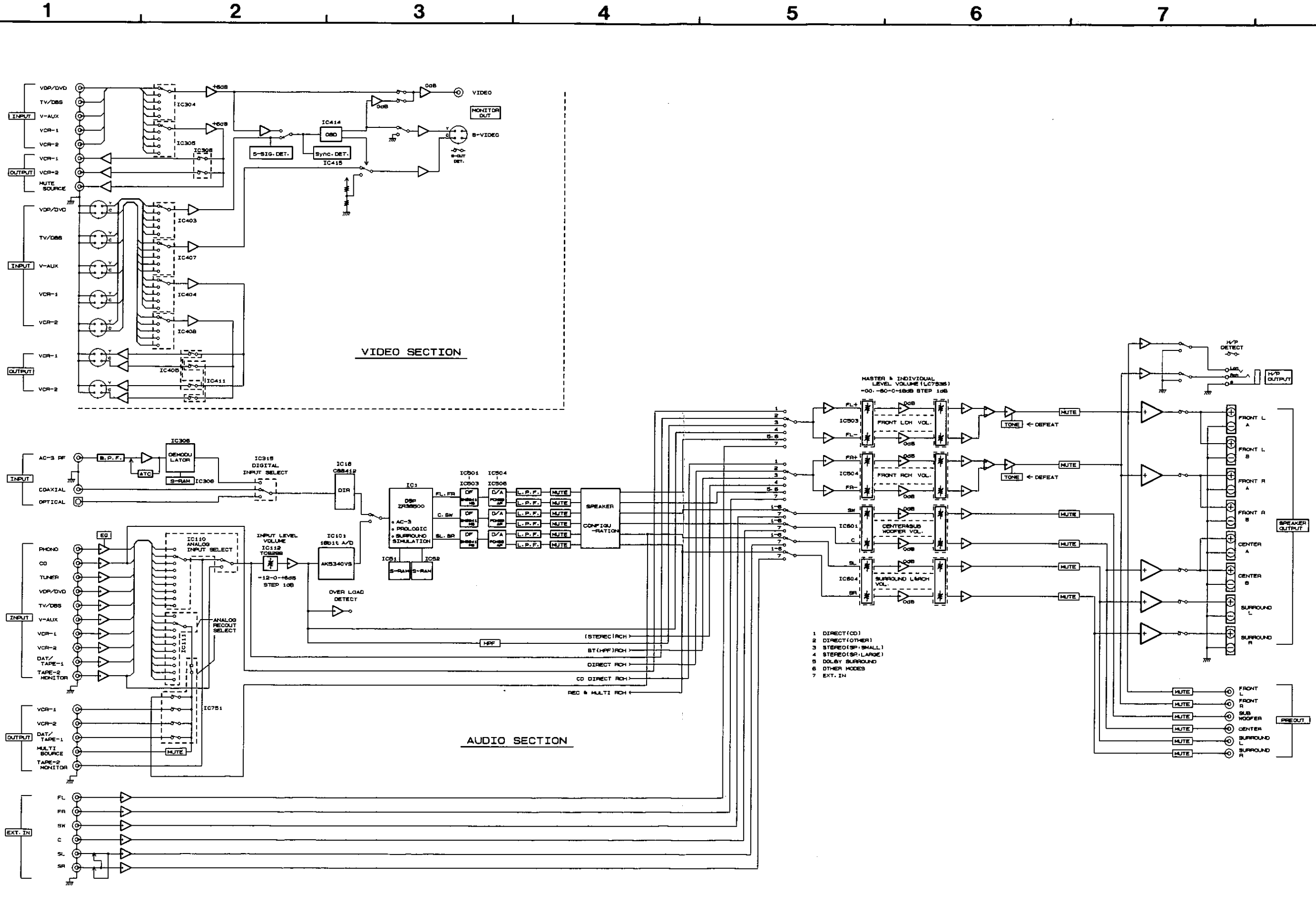

SCHEMATIC DIAGRAM (1U-2948-1 AUDIO P.W.B. UNIT)

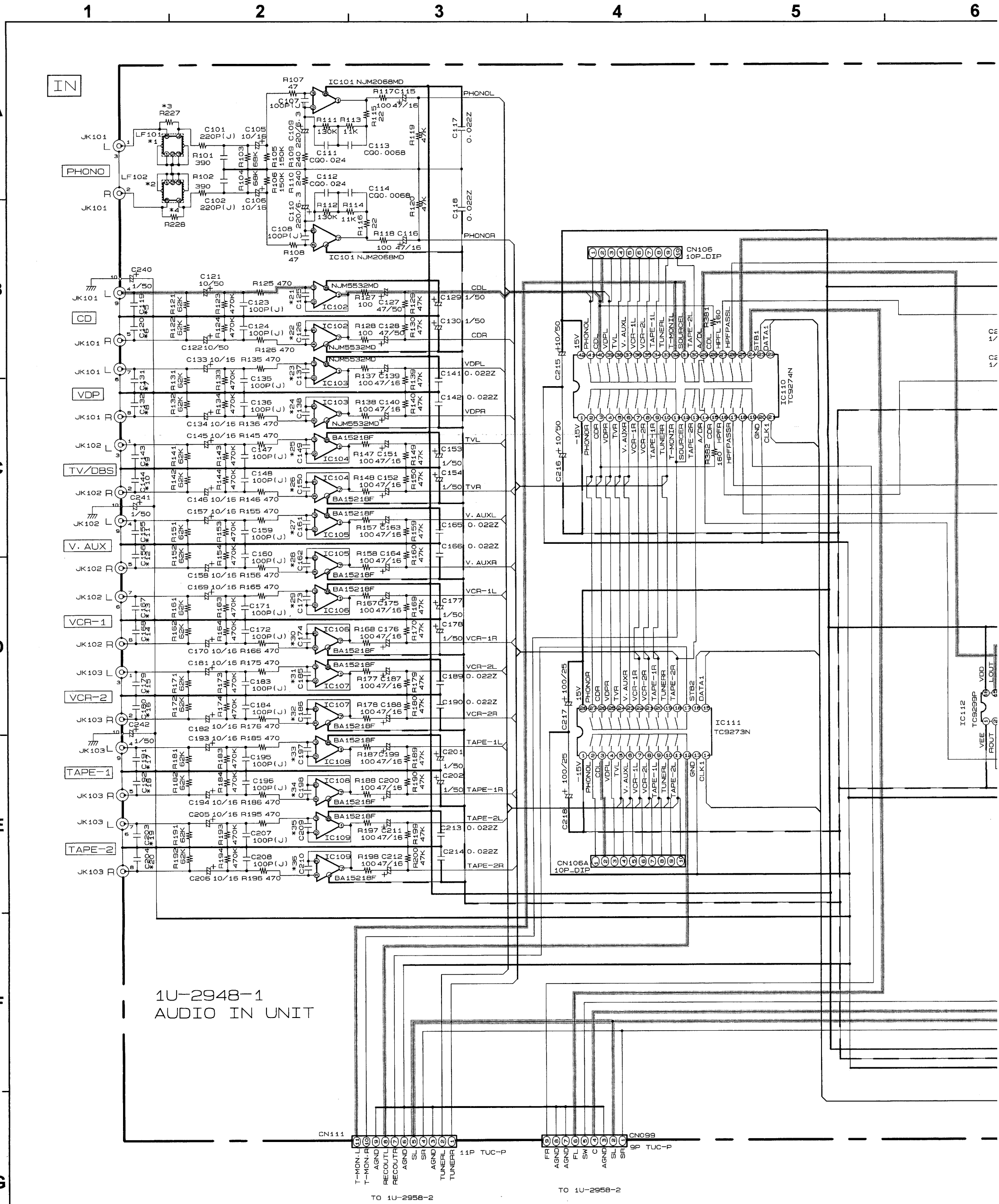

	*1 LF101	*2 LF102	*3 R227	*4 R228	*5 C119	*6 C120	*7 C131	*8 C132	*9 C143	*10 C144	*11 C155	*12 C156	*13 C167	*14 C168	*15 C179	*16 C180	*17 C191	*18 C192	*19 C203	*20 C204	*21 C125	*22 C126	*23 C137	*24 C138	*25 C149	*26 C150	*27 C161	*28 C162	*2 C1
ASIA	250uH	250uH	4.7K	4.7K	330P	330P	330P	330P	330P	330P	330P	330P	330P	330P	330P	330P	330P	330P	330P	330P	100P	100P	100P	100P	100P	100P	100P	100P	10
EUROPE	250uH	250uH	4.7K	4.7K	330P	330P	330P	330P	330P	330P	330P	330P	330P	330P	330P	330P	330P	330P	330P	330P	100P	100P	100P	100P	100P	100P	100P	100P	10
TAIWAN R.O.C	—	—	O	O	—	—	—	—	—	—	—	—	—	—	—	—	—	—	—	—	—	—	—	—	—	—	—	—	—
JAPAN	—	—	O	O	—	—	—	—	—	—	—	—	—	—	—	—	—	—	—	—	—	—	—	—	—	—	—	—	—

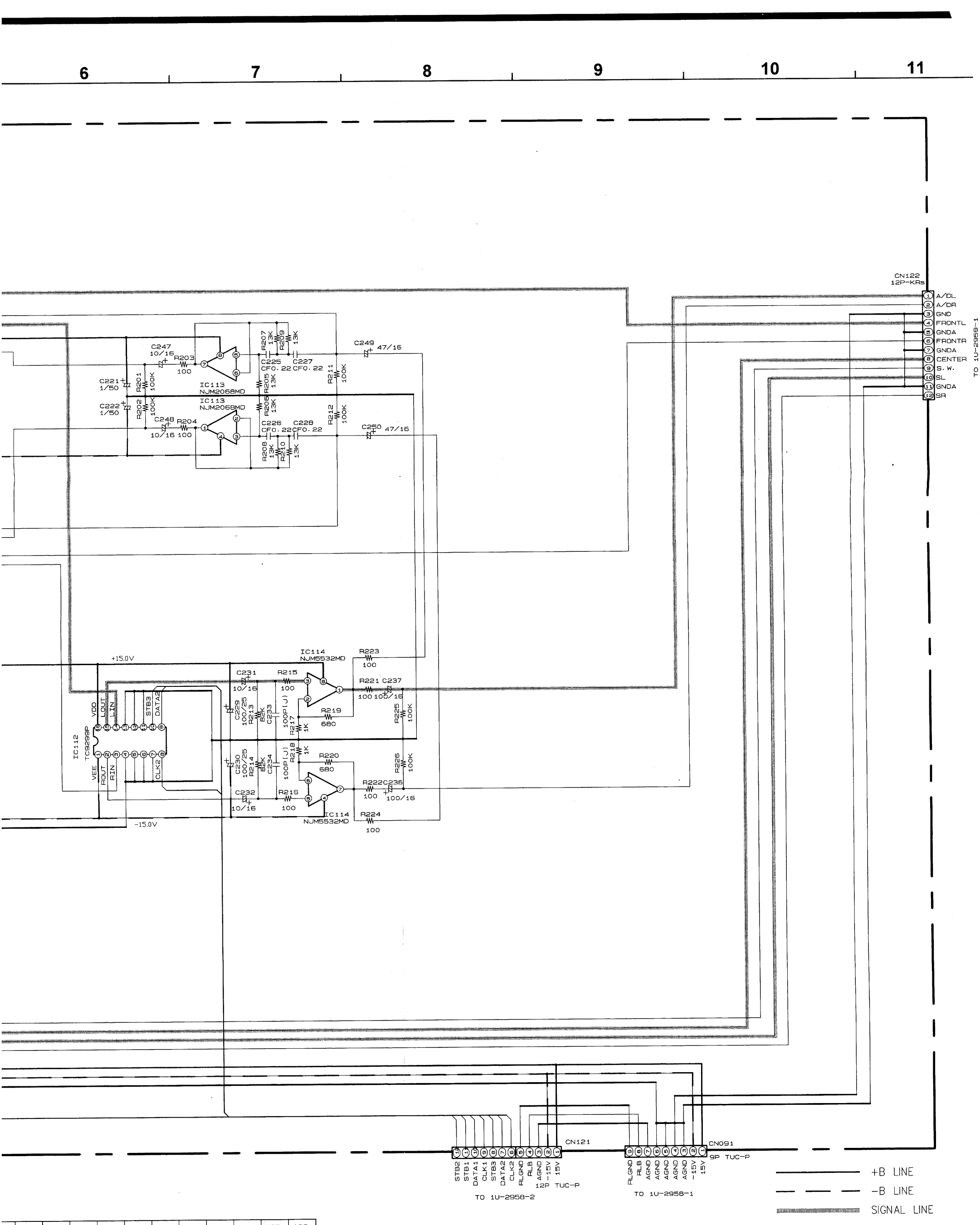

	*26 C150	*27 C161	*28 C162	*29 C173	*30 C174	*31 C185	*32 C186	*33 C197	*34 C198	*35 C209	*36 C210
49											
OP	100P	100P	100P	100P	100P	100P	100P	100P	100P	100P	100P
OP	100P	100P	100P	100P	100P	100P	100P	100P	100P	100P	100P
—	—	—	—	—	—	—	—	—	—	—	—
—	—	—	—	—	—	—	—	—	—	—	—

NOTES

ALL RESISTANCE VALUES IN OHM. k=1,000 OHM, M=1,000,000 OHM

ALL CAPACITANCE VALUES IN MICRO FARAD. P=MICRO-MICRO FARAD

EACH VOLTAGE AND CURRENT ARE MEASURED AT NO SIGNAL INPUT CONDITION.

CIRCUIT AND PARTS ARE SUBJECT TO CHANGE WITHOUT PRIOR NOTICE.

WARNING:
Parts marked with this symbol ⚠ ▨ have critical characteristics.
Use ONLY replacement parts recommended by the manufacturer.

CAUTION:
Before returning the unit to the customer, make sure you make either (1) a leakage current check or (2) a line to chassis resistance check. If the leakage current exceeds 0.5 milliamps, or if the resistance from chassis to either side of the power cord is less than 240 kohms, the unit is defective.

WARNING:
DO NOT return the unit to the customer until the problem is located and corrected.

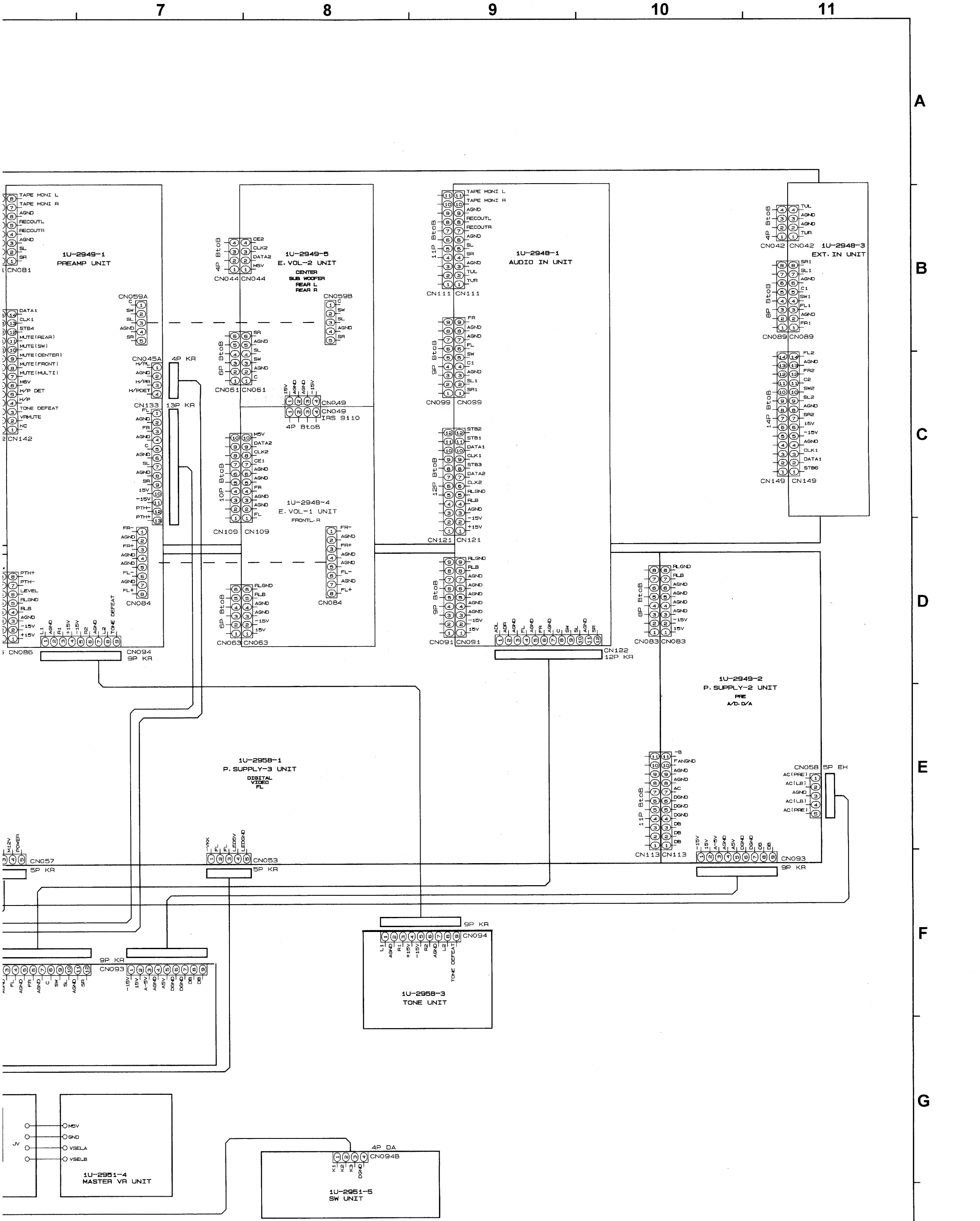
7
8
9
10
11
A
B
C
D
E
F
G
H
1U-2949-1
PREAMP UNIT
CN081
TAPE MONI L
TAPE MONI R
AGND
RECOUTL
RECOUTR
AGND
SL
SR
CN142
DATA1
CLK1
STB4
MUTE(REAR)
MUTE(SW)
MUTE(CENTER)
MUTE(FRONT)
MUTE(MULTI)
M5V
H/P DET
H/P
TONE DEFEAT
VMUTE
NC
CN059A
CN059B
SW
SL
AGND
SR
CN045A
H/PL
AGND
H/PR
H/PDET
4P KR
CN133
13P KR
FL
FR
C
SL
SR
15V
-15V
PTH+
PTH-
CN084
FR-
FR+
FL-
FL+
CN086
PTH+
PTH-
LEVEL
RLGND
RLB
-15V
+15V
L1
R1
R2
L2
TONE DEFEAT
CN094
9P KR
1U-2949-5
E. VOL-2 UNIT
CENTER
SUB WOOFER
REAR L
REAR R
4P BtoB
CE2
CLK2
DATA2
M5V
CN044
CN051
6P BtoB
SR
AGND
SL
SW
CN049
IAS 9110
4P BtoB
10P BtoB
FR
FL
CN109
1U-2948-4
E. VOL-1 UNIT
FRONT L, R
CN063
1U-2948-1
AUDIO IN UNIT
11P BtoB
CN111
9P BtoB
CN099
12P BtoB
STB2
STB1
DATA1
CLK1
STB3
DATA2
CLK2
RLGND
RLB
CN121
CN091
ADL
ADR
CN122
12P KR
1U-2948-3
EXT. IN UNIT
CN042
8P BtoB
SR1
SL1
C1
SW1
FL1
FR1
CN089
14P BtoB
FL2
FR2
C2
SW2
SL2
SR2
CN149
1U-2949-2
P. SUPPLY-2 UNIT
PRE
A/D. D/A
CN083
11P BtoB
CN113
CN058 5P EH
AC(PRE)
AC(LB)
CN093
9P KR
1U-2958-1
P. SUPPLY-3 UNIT
DIGITAL
VIDEO
FL
M12V
POWER
CN057
5P KR
VKK
LEDEV
LEDGND
CN053
1U-2958-3
TONE UNIT
1U-2951-4
MASTER VR UNIT
M5V
GND
VSELA
VSELB
1U-2951-5
SW UNIT
4P DA
CN094B
K1
K2
K3
DGND

NG DIAGRAM

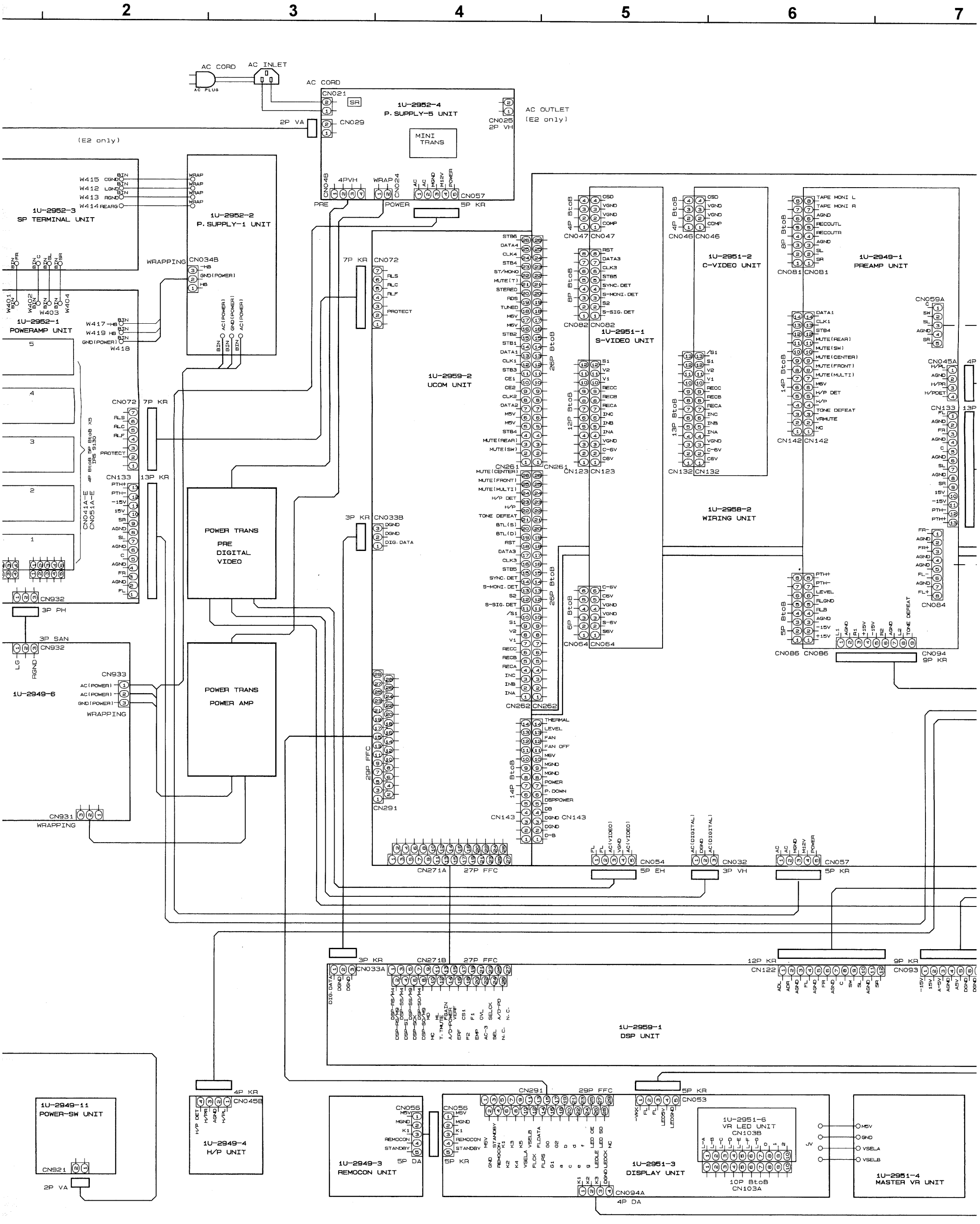
AC CORD
AC INLET
AC PLUG
AC CORD
CN021
SR
1U-2952-4
P. SUPPLY-5 UNIT
2P VA
CN029
CN025
2P VH
AC OUTLET
(E2 only)
MINI
TRANS
(E2 only)
CN048
4PVH
WRAP
CN024
AC
AC
MGND
M12V
POWER
CN057
PRE
POWER
5P KR
1U-2952-3
SP TERMINAL UNIT
1U-2952-2
P. SUPPLY-1 UNIT
W415 CGND
W412 LGND
W413 AGND
W414 REARG
BIN
WRAP
WRAPPING CN034B
HB
GND(POWER)
HB
7P KR CN072
RLS
RLC
RLF
PROTECT
W401
W402
W403
W404
1U-2952-1
POWERAMP UNIT
W417 HB
W419 HB
GND(POWER)
W418
AC(POWER)
GND(POWER)
AC(POWER)
CN072 7P KR
CN133 13P KR
CN041A-E
CN051A-E
4P BtoB 5P BtoB X5
1MS 9.15D
POWER TRANS
PRE
DIGITAL
VIDEO
POWER TRANS
POWER AMP
CN932
3P PH
3P SAN
LG
AGND
1U-2949-6
CN933
AC(POWER)
AC(POWER)
GND(POWER)
WRAPPING
CN931
WRAPPING
3P KR CN033B
DGND
DGND
DIG. DATA
7P KR CN072
RLS
RLC
RLF
PROTECT
STB6
DATA4
CLK4
STB4
ST/MONO
MUTE(T)
STEREO
RDS
TUNED
M6V
M6V
STB2
STB1
DATA1
CLK1
STB3
CE1
CE2
CLK2
DATA2
M5V
M5V
STB4
MUTE(REAR)
MUTE(SW)
26P BtoB
CN261
MUTE(CENTER)
MUTE(FRONT)
MUTE(MULTI)
H/P DET
H/P
TONE DEFEAT
BTL(S)
BTL(D)
RST
DATA3
CLK3
STB5
SYNC. DET
S-MONI. DET
S2
S-SIG. DET
/S1
S1
V2
V1
RECC
RECB
RECA
INC
INB
INA
26P BtoB
CN262
1U-2959-2
UCOM UNIT
29P FFC
CN291
CN271A
27P FFC
14P BtoB
CN143
THERMAL
LEVEL
FAN
FAN OFF
M6V
MGND
MGND
POWER
P. DOWN
DSPPOWER
DB
DGND
DGND
D-B
12P BtoB
CN123
S1
V2
V1
RECC
RECB
RECA
INC
INB
INA
VGND
C-6V
C6V
6P BtoB
CN064
C-6V
C6V
VGND
VGND
S-6V
S6V
4P BtoB
CN047
OSD
VGND
VGND
COMP
8P BtoB
CN082
RST
DATA3
CLK3
STB5
SYNC. DET
S-MONI. DET
S2
S-SIG. DET
1U-2951-1
S-VIDEO UNIT
13P BtoB
CN132
/S1
S1
V2
V1
RECC
RECB
RECA
INC
INB
INA
VGND
C-6V
C6V
1U-2951-2
C-VIDEO UNIT
1U-2958-2
WIRING UNIT
8P BtoB
CN081
TAPE MONI L
TAPE MONI R
AGND
RECOUTL
RECOUTR
AGND
SL
SR
1U-2949-1
PREAMP UNIT
14P BtoB
CN142
DATA1
CLK1
STB4
MUTE(REAR)
MUTE(SW)
MUTE(CENTER)
MUTE(FRONT)
MUTE(MULTI)
M5V
H/P DET
H/P
TONE DEFEAT
VMUTE
NC
CN059A
SW
SL
AGND
SR
CN045A 4P
H/PL
AGND
H/PR
H/PDET
CN133 13P
FL
AGND
FR
AGND
C
AGND
SL
AGND
SR
15V
-15V
PTH-
PTH+
FR-
AGND
FR+
AGND
AGND
FL-
AGND
FL+
CN084
5P BtoB
CN086
PTH+
PTH-
LEVEL
RLGND
RLB
AGND
-15V
+15V
L1
AGND
R1
+15V
-15V
R2
AGND
L2
TONE DEFEAT
CN094
9P KR
CN054
5P EH
FL
FL
AC(VIDEO)
VGND
AC(VIDEO)
CN032
3P VH
AC(DIGITAL)
DGND
AC(DIGITAL)
CN057
5P KR
AC
AC
MGND
M12V
POWER
3P KR
CN033A
DIG. DATA
DGND
DGND
27P FFC
CN271B
DSP-RS/M4
DSP-RS/M8
DSP-SS/M4
DSP-SI
DSP-SCK
DSP-SO/M4
DSP-SO/M8
MD
MC
ML
T. MUTE
A/D-GAIN
A/D-POWER
VERF
ERF
CS1
F2
F1
EMP
OVL
AC-3
SELCK
SEL
A/D-PD
N.C.
N.C.
1U-2959-1
DSP UNIT
12P KR
CN122
ADL
ADR
AGND
FL
AGND
FR
AGND
C
SW
SL
AGND
SR
9P KR
CN093
-15V
15V
A-5V
AGND
A5V
DGND
DGND
1U-2949-11
POWER-SW UNIT
CN921
2P VA
4P KR
CN045B
H/P DET
H/PR
AGND
H/PL
1U-2949-4
H/P UNIT
CN056
M5V
MGND
K1
REMOCON
STANDBY
5P DA
5P KR
1U-2949-3
REMOCON UNIT
CN291
29P FFC
CN053
5P KR
-VKK
FL
FL
LED5V
LEDGND
1U-2951-3
DISPLAY UNIT
1U-2951-6
VR LED UNIT
CN103B
10P BtoB
CN103A
5V
M5V
GND
VSELA
VSELB
1U-2951-4
MASTER VR UNIT
CN094A
4P DA

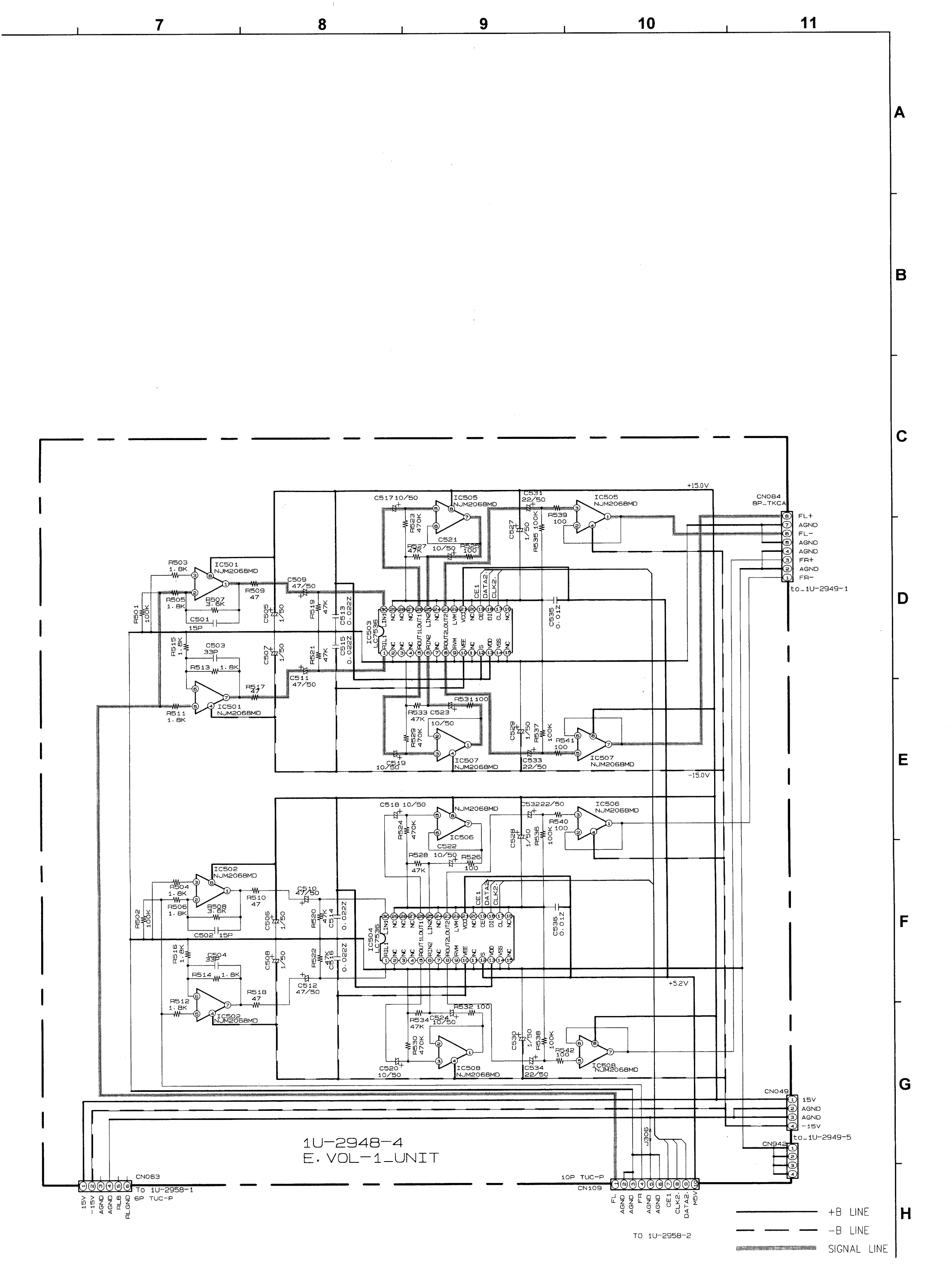
7
8
9
10
11
A
B
C
D
E
F
G
H
+15.0V
-15.0V
+5.2V
IC501 NJM2068MD
IC502 NJM2068MD
IC503 LC7536
IC504 LC7536
IC505 NJM2068MD
IC506 NJM2068MD
IC507 NJM2068MD
IC508 NJM2068MD
R501 100K
R502 100K
R503 1.8K
R504 1.8K
R505 1.8K
R506 1.8K
R507 3.6K
R508 3.6K
R509 47
R510 47
R511 1.8K
R512 1.8K
R513 1.8K
R514 1.8K
R515 1.8K
R516 1.8K
R517 47
R518 47
R519 47K
R520 47K
R521 47K
R522 47K
R523 470K
R524 470K
R525 100
R526 100
R527 47K
R528 47K
R529 470K
R530 470K
R531 100
R532 100
R533 47K
R534 47K
R535 100K
R536 100K
R537 100K
R538 100K
R539 100
R540 100
R541 100
R542 100
C501 15P
C502 15P
C503 33P
C504 33P
C505 1/50
C506 1/50
C507 1/50
C508 1/50
C509 47/50
C510 47/50
C511 47/50
C512 47/50
C513 0.022Z
C514 0.022Z
C515 0.022Z
C516 0.022Z
C517 10/50
C518 10/50
C519 10/50
C520 10/50
C521 10/50
C522 10/50
C523 10/50
C524 10/50
C527 1/50
C528 1/50
C529 1/50
C530 1/50
C531 22/50
C533 22/50
C534 22/50
C535 0.01Z
C536 0.01Z
CE1
DATA2.
CLK2.
CN084 8P_TKCA
FL+
AGND
FL-
AGND
AGND
FR+
AGND
FR-
to_1U-2949-1
CN049
15V
AGND
AGND
-15V
to_1U-2949-5
CN942
J306
1U-2948-4
E. VOL-1_UNIT
CN063
To 1U-2958-1
6P TUC-P
15V
-15V
AGND
AGND
RLB
RLGND
10P TUC-P
CN109
FL
AGND
AGND
FR
AGND
AGND
CE1
CLK2.
DATA2.
M5V
TO 1U-2958-2
+B LINE
-B LINE
SIGNAL LINE

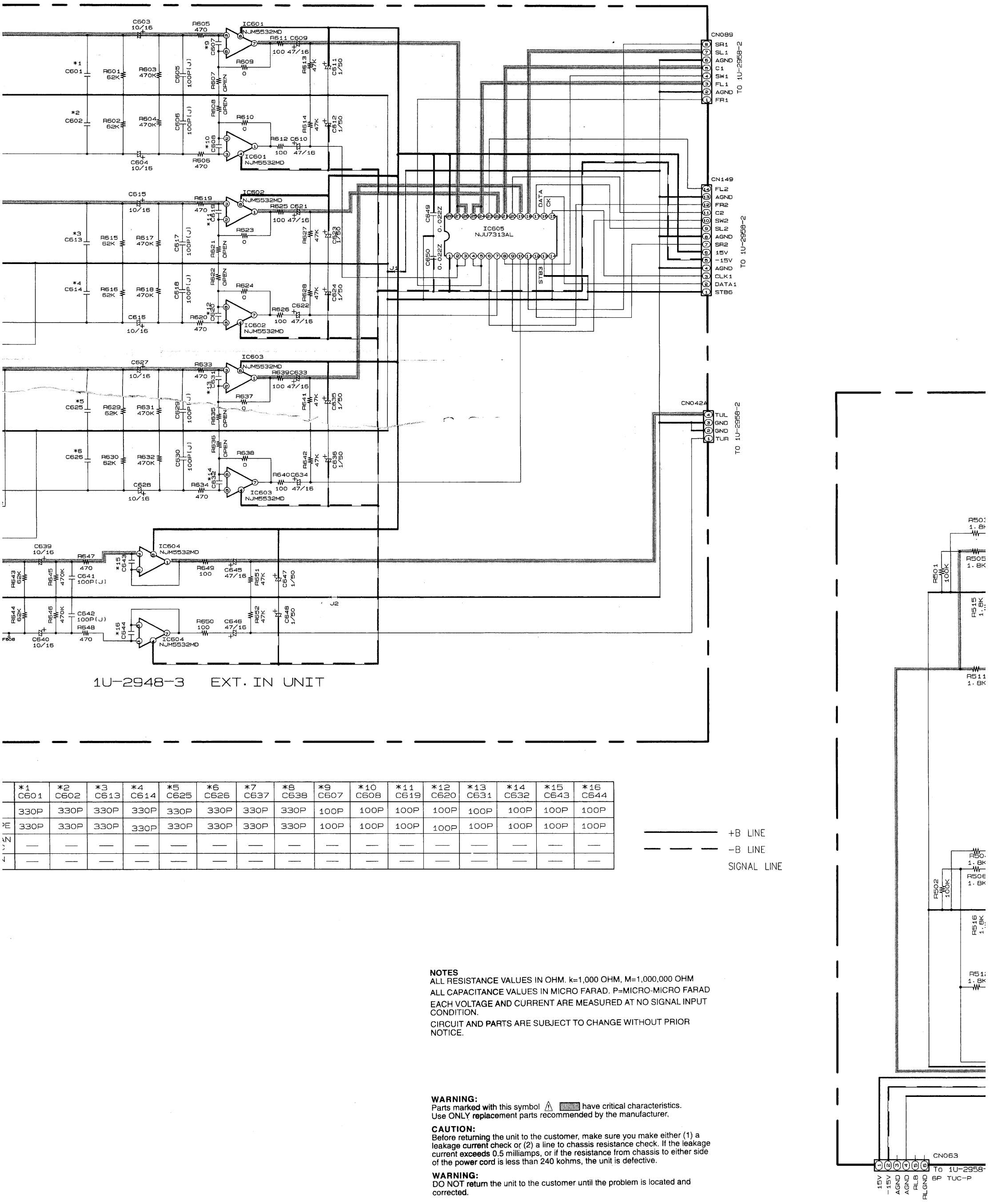

1U-2948-3 EXT. IN UNIT

	*1 C601	*2 C602	*3 C613	*4 C614	*5 C625	*6 C626	*7 C637	*8 C638	*9 C607	*10 C608	*11 C619	*12 C620	*13 C631	*14 C632	*15 C643	*16 C644
	330P	330P	330P	330P	330P	330P	330P	330P	100P	100P	100P	100P	100P	100P	100P	100P
	330P	330P	330P	330P	330P	330P	330P	330P	100P	100P	100P	100P	100P	100P	100P	100P
	—	—	—	—	—	—	—	—	—	—	—	—	—	—	—	—
	—	—	—	—	—	—	—	—	—	—	—	—	—	—	—	—

+B LINE

-B LINE

SIGNAL LINE

NOTES

ALL RESISTANCE VALUES IN OHM. k=1,000 OHM, M=1,000,000 OHM

ALL CAPACITANCE VALUES IN MICRO FARAD. P=MICRO-MICRO FARAD

EACH VOLTAGE AND CURRENT ARE MEASURED AT NO SIGNAL INPUT CONDITION.

CIRCUIT AND PARTS ARE SUBJECT TO CHANGE WITHOUT PRIOR NOTICE.

WARNING:

Parts marked with this symbol ⚠ ▒▒ have critical characteristics.
Use ONLY replacement parts recommended by the manufacturer.

CAUTION:

Before returning the unit to the customer, make sure you make either (1) a leakage current check or (2) a line to chassis resistance check. If the leakage current exceeds 0.5 milliamps, or if the resistance from chassis to either side of the power cord is less than 240 kohms, the unit is defective.

WARNING:

DO NOT return the unit to the customer until the problem is located and corrected.

SCHEMATIC DIAGRAM (1U-2949-2 ~ 6, 11 POWER SUPPLY/REMOCON/HEAD PHONE/VOLUME-2/POWER SW P.W.I

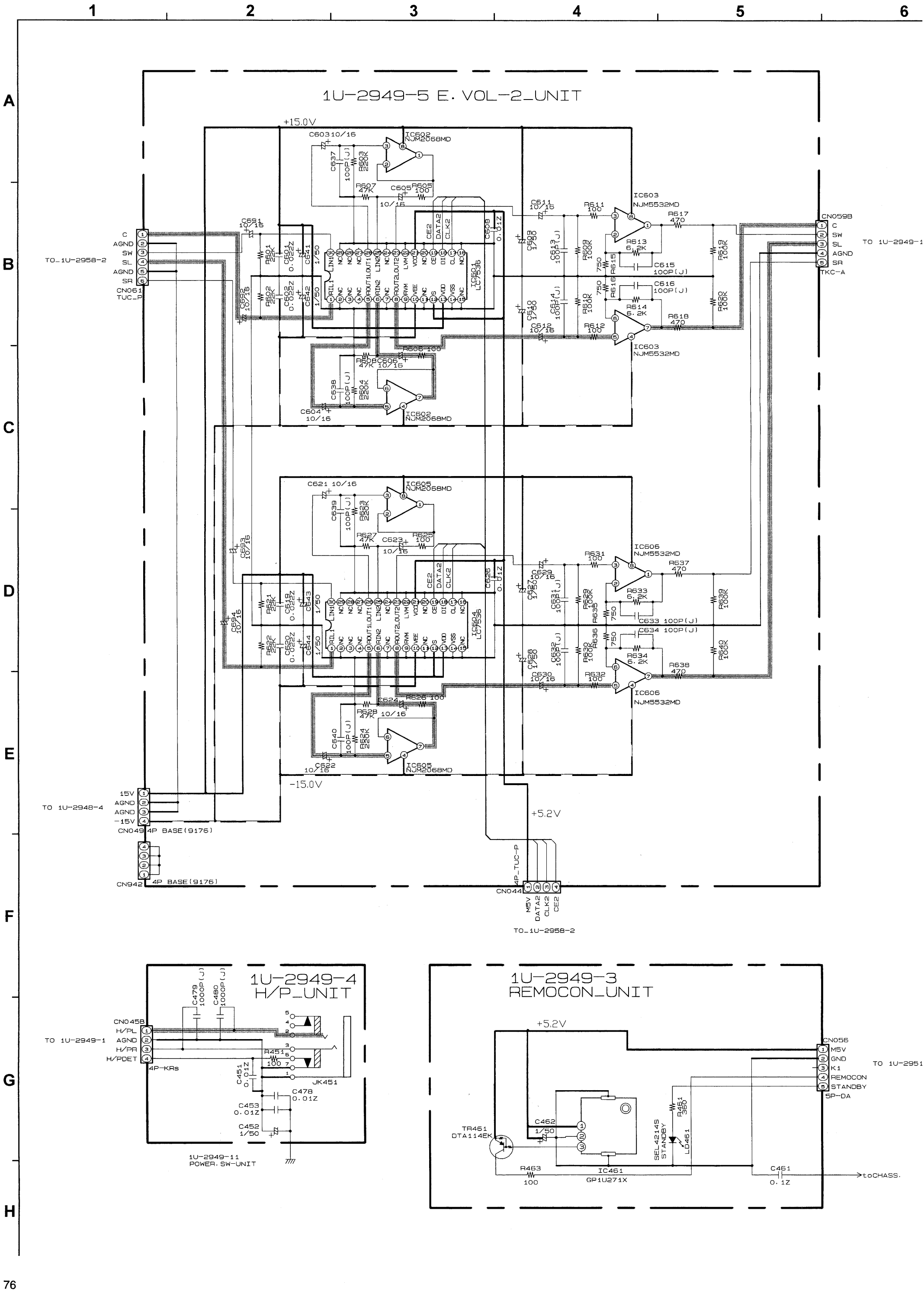
1U-2949-5 E. VOL-2_UNIT
+15.0V
IC602 NJM2068MD
IC603 NJM5532MD
IC605 NJM2068MD
IC606 NJM5532MD
IC601 LC7536
IC604 LC7536
C637 100P(J)
C638 100P(J)
C639 100P(J)
C640 100P(J)
C631 100P(J)
C632 100P(J)
C633 100P(J)
C634 100P(J)
C613 100P(J)
C614 100P(J)
C615 100P(J)
C616 100P(J)
R603 220K
R604 220K
R623 220K
R624 220K
R629 100K
R630 100K
R639 100K
R640 100K
R609 100K
R610 100K
R619 100K
R620 100K
R607 47K
R608 47K
R627 47K
R628 47K
R605 100
R606 100
R625 100
R626 100
R611 100
R612 100
R631 100
R632 100
R617 470
R618 470
R637 470
R638 470
R613 6.2K
R614 6.2K
R633 6.2K
R634 6.2K
R615 750
R616 750
R635 750
R636 750
C601 0.022Z
C602 0.022Z
C619 0.022Z
C620 0.022Z
C641 1/50
C642 1/50
C643 1/50
C644 1/50
C608 0.01Z
C626 0.01Z
C609 1/50
C610 1/50
C627 1/50
C628 1/50
C611 10/16
C612 10/16
C629 10/16
C630 10/16
C691 10/16
C692 10/16
C693 10/16
C694 10/16
C603 10/16
C604 10/16
C621 10/16
C622 10/16
C623 10/16
C624 10/16
C605 10/16
C606 10/16
C607 10/16
C608 10/16
C609 10/16
C610 10/16
C611 10/16
C612 10/16
C613 10/16
C614 10/16
C615 10/16
C616 10/16
C617 10/16
C618 10/16
C619 10/16
C620 10/16
C621 10/16
C622 10/16
C623 10/16
C624 10/16

)WER SW P.W.B. UNIT)

6 7 8 9 10 11

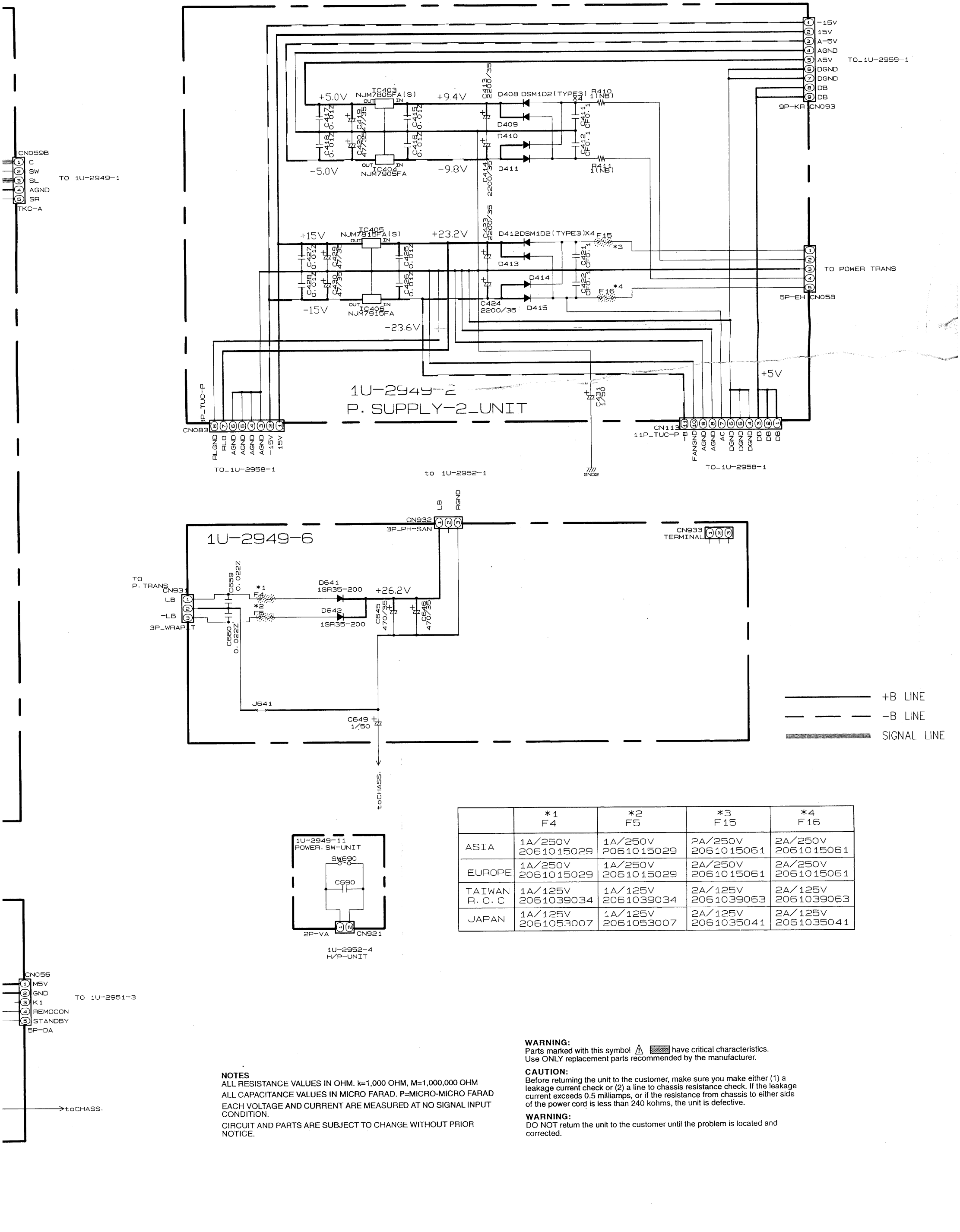

1U-2952-4
H/P-UNIT

	*1 F4	*2 F5	*3 F15	*4 F16
ASIA	1A/250V 2061015029	1A/250V 2061015029	2A/250V 2061015061	2A/250V 2061015061
EUROPE	1A/250V 2061015029	1A/250V 2061015029	2A/250V 2061015061	2A/250V 2061015061
TAIWAN R.O.C	1A/125V 2061039034	1A/125V 2061039034	2A/125V 2061039063	2A/125V 2061039063
JAPAN	1A/125V 2061053007	1A/125V 2061053007	2A/125V 2061035041	2A/125V 2061035041

NOTES

ALL RESISTANCE VALUES IN OHM. k=1,000 OHM, M=1,000,000 OHM

ALL CAPACITANCE VALUES IN MICRO FARAD. P=MICRO-MICRO FARAD

EACH VOLTAGE AND CURRENT ARE MEASURED AT NO SIGNAL INPUT CONDITION.

CIRCUIT AND PARTS ARE SUBJECT TO CHANGE WITHOUT PRIOR NOTICE.

WARNING:
Parts marked with this symbol ⚠ ▒ have critical characteristics.
Use ONLY replacement parts recommended by the manufacturer.

CAUTION:
Before returning the unit to the customer, make sure you make either (1) a leakage current check or (2) a line to chassis resistance check. If the leakage current exceeds 0.5 milliamps, or if the resistance from chassis to either side of the power cord is less than 240 kohms, the unit is defective.

WARNING:
DO NOT return the unit to the customer until the problem is located and corrected.

6 7 8 9 10 11

A B C D E F G H

1U-2958-3 TONE_UNIT

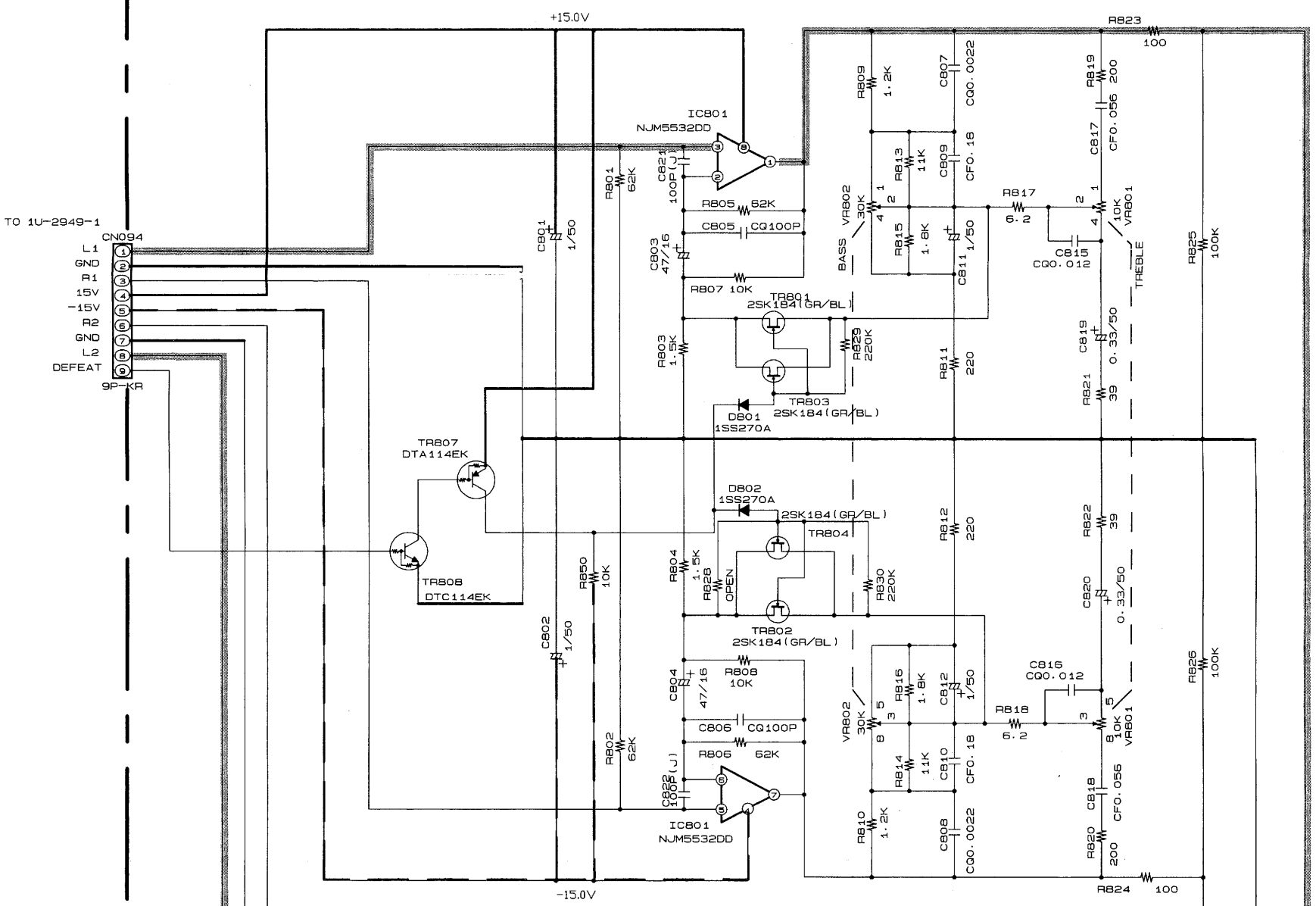

	*1 F11	*2 F12	*3 F13	*4 F16
ASIA	2A/250V 2061015061	2A/250V 2061015061	4A/250V 2061015087	4A/250V 2061015087
EUROPE	2A/250V 2061015061	2A/250V 2061015061	4A/250V 2061015087	4A/250V 2061015087
TAIWAN R.O.C	2A/125V 2061039063	2A/125V 2061039063	4A/125V 2061039092	4A/125V 2061039092
JAPAN	2A/125V 2061035041	2A/125V 2061035041	4A/125V 2061035070	4A/125V 2061035070

+B LINE

-B LINE

SIGNAL LINE

NOTES

ALL RESISTANCE VALUES IN OHM. k=1,000 OHM, M=1,000,000 OHM

ALL CAPACITANCE VALUES IN MICRO FARAD. P=MICRO-MICRO FARAD

EACH VOLTAGE AND CURRENT ARE MEASURED AT NO SIGNAL INPUT CONDITION.

CIRCUIT AND PARTS ARE SUBJECT TO CHANGE WITHOUT PRIOR NOTICE.

WARNING:
Parts marked with this symbol ⚠ ▒ have critical characteristics.
Use ONLY replacement parts recommended by the manufacturer.

CAUTION:
Before returning the unit to the customer, make sure you make either (1) a leakage current check or (2) a line to chassis resistance check. If the leakage current exceeds 0.5 milliamps, or if the resistance from chassis to either side of the power cord is less than 240 kohms, the unit is defective.

WARNING:
DO NOT return the unit to the customer until the problem is located and corrected.

SCHEMATIC DIAGRAM (1U-2958-1, 3 POWER SUPPLY-3/TONE-2 P.W.B. UNIT)

1 2 3 4 5 6

1U-2958-1
POWER SUPPLY-3 UNIT

TO 1U-2949-2
CN083
8P_TUC-P
RLGND RLB AGND AGND AGND AGND -15V 15V

TO 1U-2949-2
CN113
11P_TUC-P
-B FANGND AGND AGND AC DGND DGND DGND DB DB DB

-15.0V
+15.0V
C931 0.1Z
FG1
9P_TUC-P CN091
TO 1U-2948-1
6P_TUC-P CN063 TO 1U-2949-5
8P_TUC-P CN086

TR475 2SB1041(R)
R410 10K
R411 100K
TR476 2SA1037(S/R)
R412 10K
TR478 2SC2412(S)
R414 10K
R415 10K
R416 10K
R413 10K
TR477 2SD1292(R)

-32.6V
TR905 2SA988(E/F)4.7(NB)
R905
-45.3V
C927 0.01Z
C926 1/50
R904 10K
D909 1SR35-200
R903 10(NB)
C923 330/50
D908 1SR35-200
C925 1/50
ZD901 MTZJ36A
C924 330/50
ZD902 MTZJ9.1A
R906 10K
C930 0.1Z
FG2

CN053
-VKK
FL
FL
LED5V
LED-GND
5P-KR
TO 1U-2951-3

IC905 NJM7805FA(S)
C928 10/16
+5.0V

TO 1U-2949-1
CN094
L1 GND R1 15V -15V R2 GND L2 DEFEAT
9P-KR

+5.0V
TR902 2SA1633F31(E/F)
D902 1SS270A
C910 0.01Z
C908 47/35
TR903 DTA143EK
R901 30(NB)
IC901 NJM7805FA(S)
TR904 DTC144EK
C907 0.01Z
+12.4V
D901 4D4B42(LC1)
*3 F13
C901 0.01Z
*4 F14
C905 1000/25
C903 0.01Z
C902 0.01Z
C904 0.01Z
C905 1000/25

TO 1U-2951-1
C-6V CSV VGND VGND S-6V S6V
CN064 6P_TUC-P

D903 1SS270A
C911 0.01Z
C909 47/35
-5.0V
IC902 NJM7906FA
C929 0.1Z
FG3

+6.0V
IC903 NJM7806FA(S)
+11.3V
C920 47/35
C918 0.01Z
C916 0.01Z
C914 3300/25
D904 DSM1D2(TYPE3)
D905 DSM1D2(TYPE3)
*1 F11
C912 0.01Z
C921 47/35
C919 0.01Z
C917 0.01Z
C915 3300/25
D906 DSM1D2(TYPE3)
-6.0V
IC904 NJM7906FA
-11.4V
D907 DSM1D2(TYPE3)
*2 F12
C922 CF0.1

THERMAL LEVEL FAN M6V MGND MGND POWER P.DOWN DSPPOWER DB DGND DGND D-B
CN143
14P TRC-X
TO 1U-2959-2

CN054 5P-EH
CN032 3P-VH
TO POWER TRANS

+5.4V
ZD401 MTZJ7.5A
+12.3V
D406 1SR35-200
D405 1SR35-200
C408 1/50
C407 0.01Z
C406 0.01Z
R402 4.7K

+6.0V
R404 47K
R405 10K
R406 20K
IC402 NJM7806FA(S)
+12.6V
TR402 2SC2412(S)
C405 0.01Z
C404 10/16
C403 0.01Z
IC401 ICPN15T
C402 2200/25
D401 1SR35-200
D402 1SR35-200
D403 1SR35-200
D404 1SR35-200
R401 10K
C410 1/50
FG

CN057
POWER
M12V
MGND
AC
AC
5P-KR
TO 1U-2952-4

ASIA
EUROI
TAIWA R. O.
JAPAI

NOTES
ALL RESI
ALL CAP
EACH VO CONDITI
CIRCUIT NOTICE.

SCHEMATIC DIAGRAM (1U-2949-1 PRE-AMP P.W.B. UNIT)

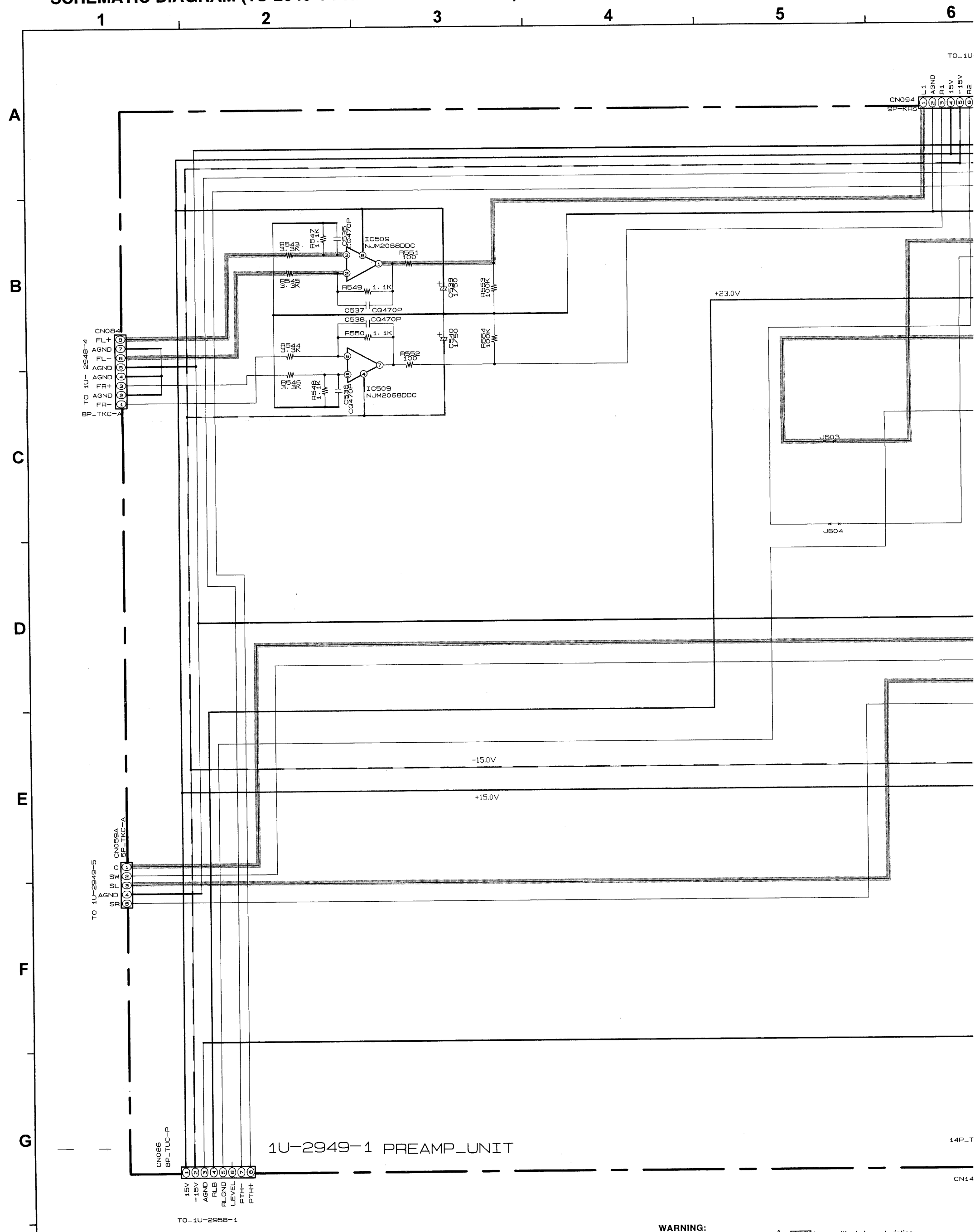

NOTES

ALL RESISTANCE VALUES IN OHM. k=1,000 OHM, M=1,000,000 OHM

ALL CAPACITANCE VALUES IN MICRO FARAD. P=MICRO-MICRO FARAD

EACH VOLTAGE AND CURRENT ARE MEASURED AT NO SIGNAL INPUT CONDITION.

CIRCUIT AND PARTS ARE SUBJECT TO CHANGE WITHOUT PRIOR NOTICE.

WARNING:
Parts marked with this symbol ⚠ ▒▒ have critical characteristics.
Use ONLY replacement parts recommended by the manufacturer.

CAUTION:
Before returning the unit to the customer, make sure you make either (1) a leakage current check or (2) a line to chassis resistance check. If the leakage current exceeds 0.5 milliamps, or if the resistance from chassis to either side of the power cord is less than 240 kohms, the unit is defective.

WARNING:
DO NOT return the unit to the customer until the problem is located and corrected.

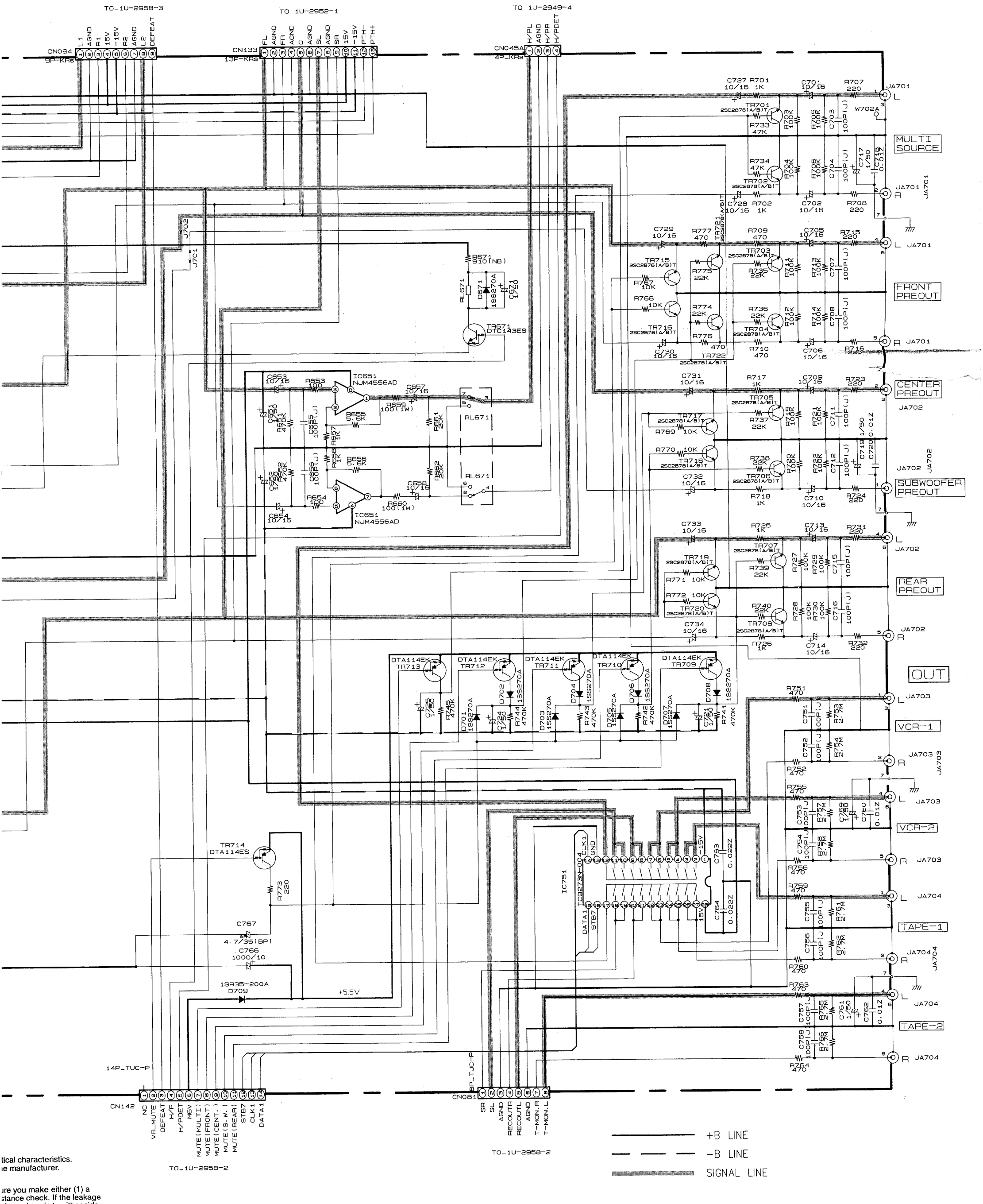

tical characteristics.
ıe manufacturer.

ıre you make either (1) a
stance check. If the leakage
from chassis to either side
is defective.

problem is located and

E-L(9131)

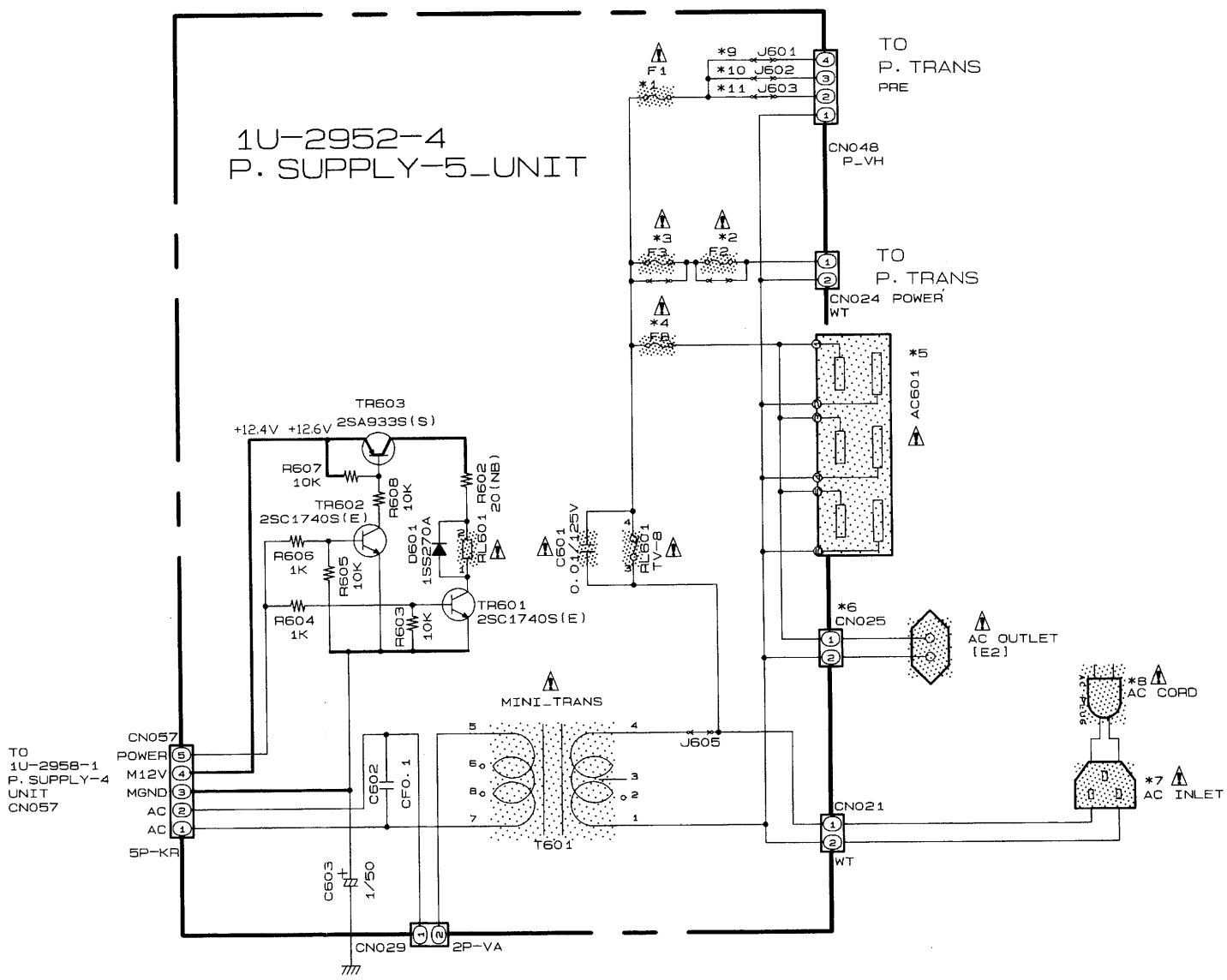

	*3 F3	*4 F8	*5 AC601	*6 CN025	*7 AC INLET	*8 AC CORD	*9 J601	*10 J602	*11 J603
	6.3A/250V 2061015061	1.25A/250V 2061015016	——	2P VH	2P 2033970008	2062147006	JW	——	——
	6.3A/250V 2061015061	1.25A/250V 2061015016	——	2P VH	2P 2033970008	2062147006	JW	——	——
)09	JW	8A/125V 2061046014	3P AC OUTLET	——	3P 2033962003	2062150103	——	JW	——
)43	JW	8A/125V 2061052008	3P AC OUTLET	——	3P 2033962003	2062150103	——	——	JW

SCHEMATIC DIAGRAM (1U-2952-4 POWER SUPPLY-5/1U-2944-1 POWER AMP-2 P.W.B. UNIT)

1 2 3 4 5 6

1U-2944-1 Power AMP-2 UNIT

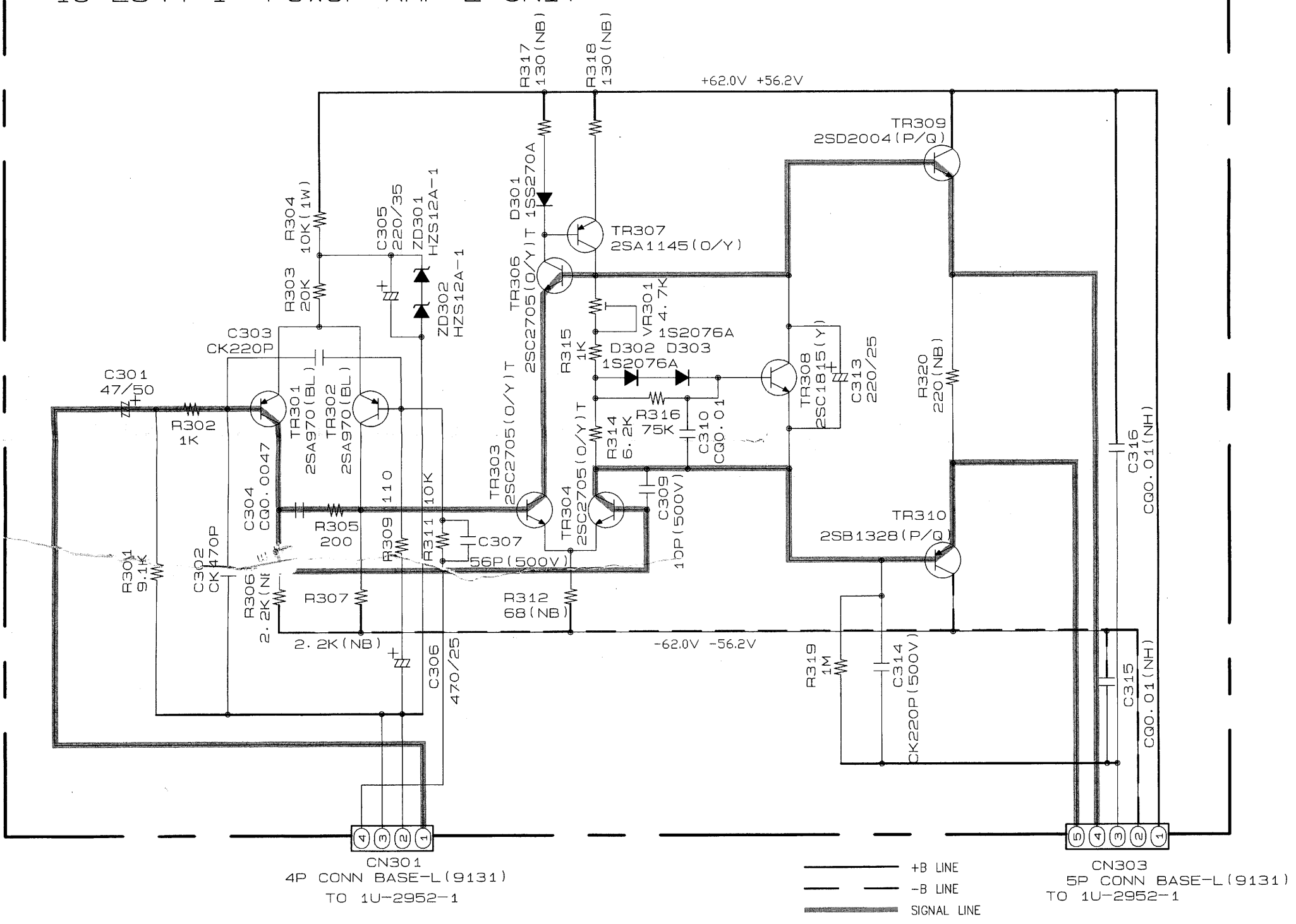

	*1 F1	*2 F2	*3 F3	* F
ASIA	630mA/250V 2061036008	JW	6.3A/250V 2061015061	1.25 2061
EUROPE	630mA/250V 2061036008	JW	6.3A/250V 2061015061	1.25 2061
TAIWAN R.O.C	2A/125V 2061039063	12A/125V 2061051009	JW	8A/1 2061
JAPAN	2A/125V 2061035041	12A/125V 2061017043	JW	8A/1 2061

SCHEMATIC DIAGRAM (1U-2952-1~ 3 POWER AMP/POWER SUPPLY-1/SP TERMINAL P.W.B. UNIT)

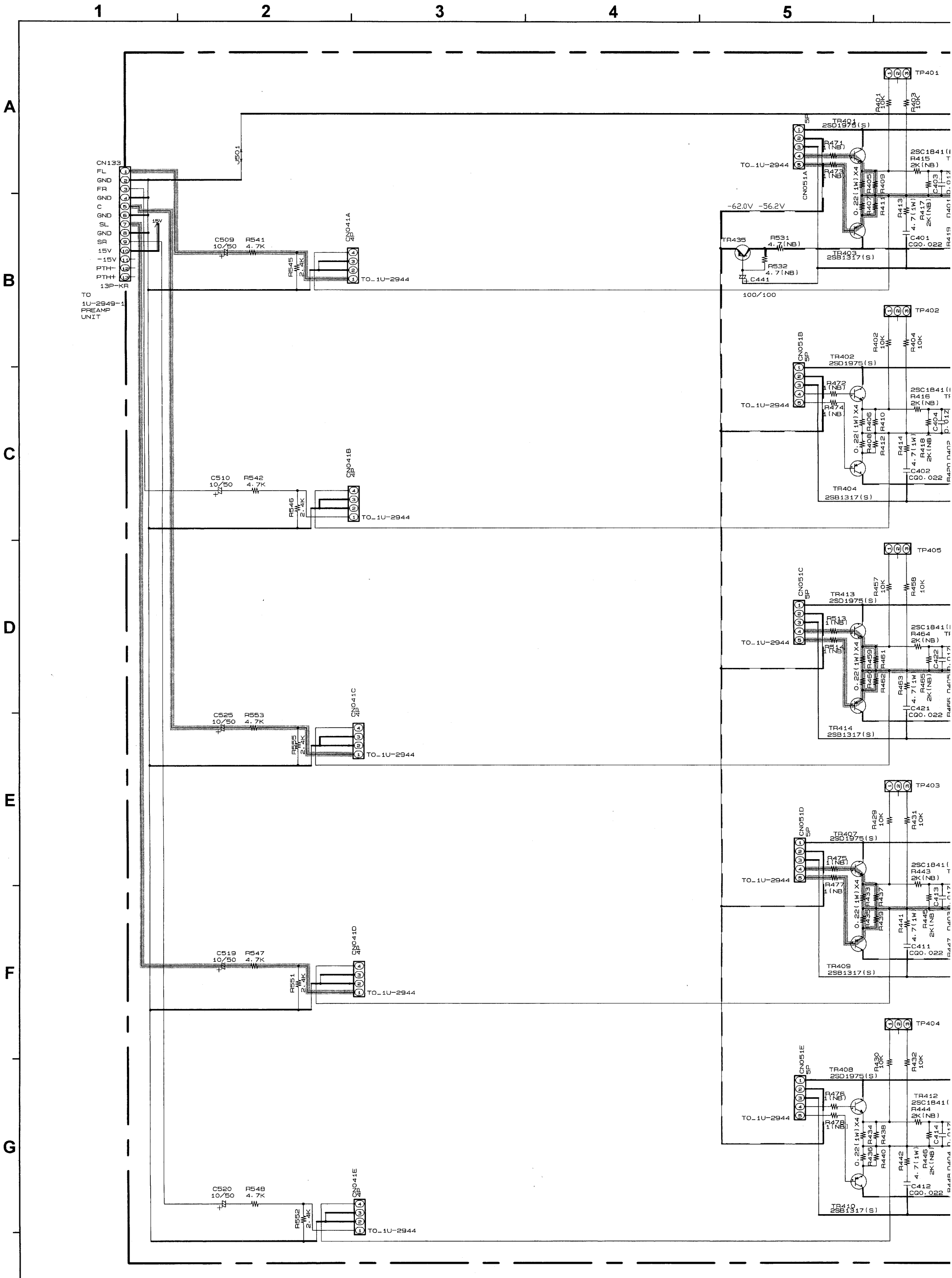

UNIT)

6 7 8 9 10 11

1U-2952-1 POWERAMP UNIT

1U-2952-2 POWER SUPPLY-1

SP TERMINAL UNIT
1U-2952-3

+B LINE
-B LINE
SIGNAL LINE

NOTES
ALL RESISTANCE VALUES IN OHM. k=1,000 OHM, M=1,000,000 OHM
ALL CAPACITANCE VALUES IN MICRO FARAD. P=MICRO-MICRO FARAD
EACH VOLTAGE AND CURRENT ARE MEASURED AT NO SIGNAL INPUT CONDITION.
CIRCUIT AND PARTS ARE SUBJECT TO CHANGE WITHOUT PRIOR NOTICE.

WARNING:
Parts marked with this symbol ⚠ ▨ have critical characteristics.
Use ONLY replacement parts recommended by the manufacturer.

CAUTION:
Before returning the unit to the customer, make sure you make either (1) a leakage current check or (2) a line to chassis resistance check. If the leakage current exceeds 0.5 milliamps, or if the resistance from chassis to either side of the power cord is less than 240 kohms, the unit is defective.

WARNING:
DO NOT return the unit to the customer until the problem is located and corrected.

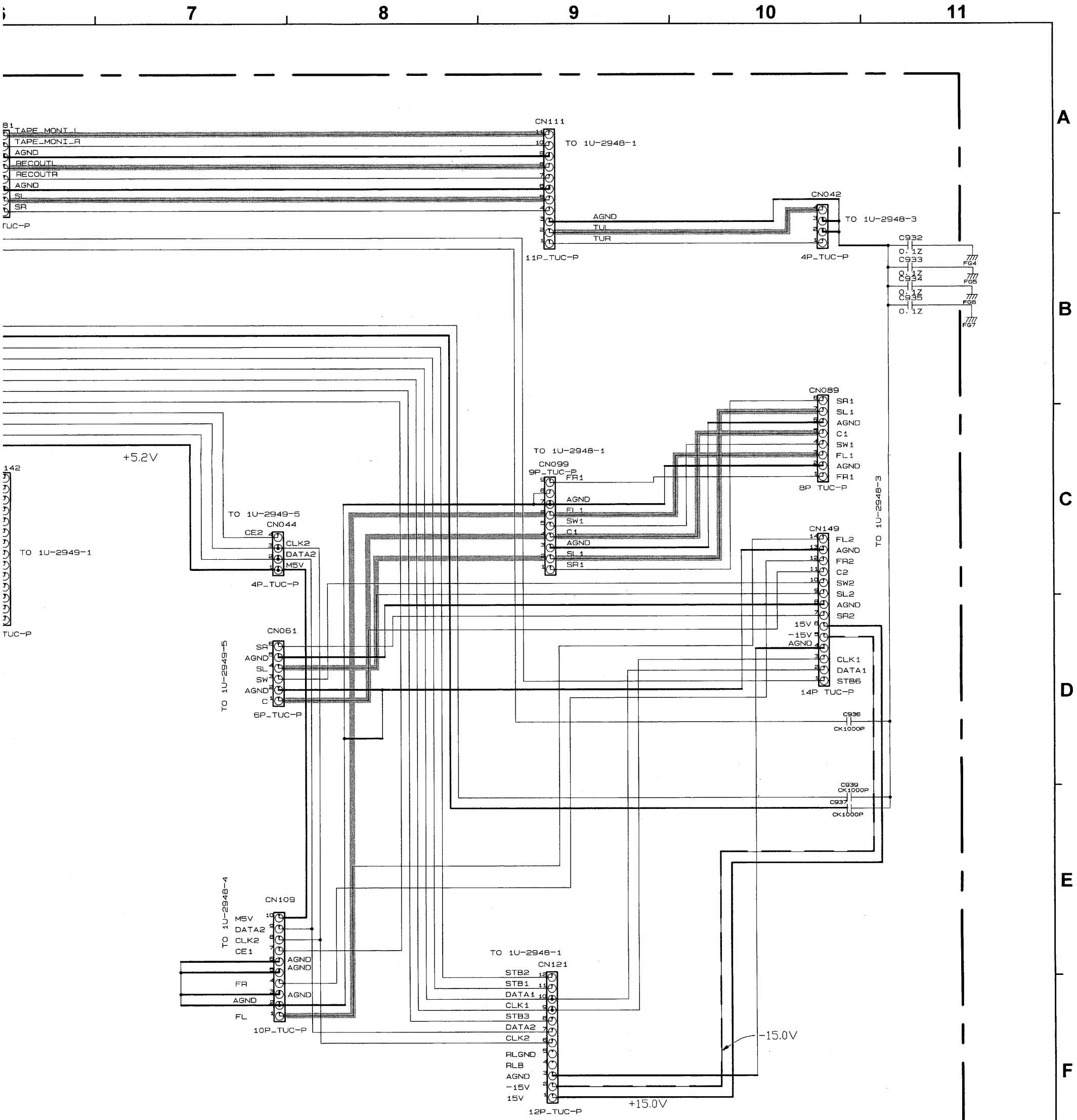

acteristics.
acturer.

ake either (1) a
eck. If the leakage
ssis to either side
tive.

s located and

SCHEMATIC DIAGRAM (1U-2958-2 WIRING P.W.B. UNIT)

1 2 3 4 5 6

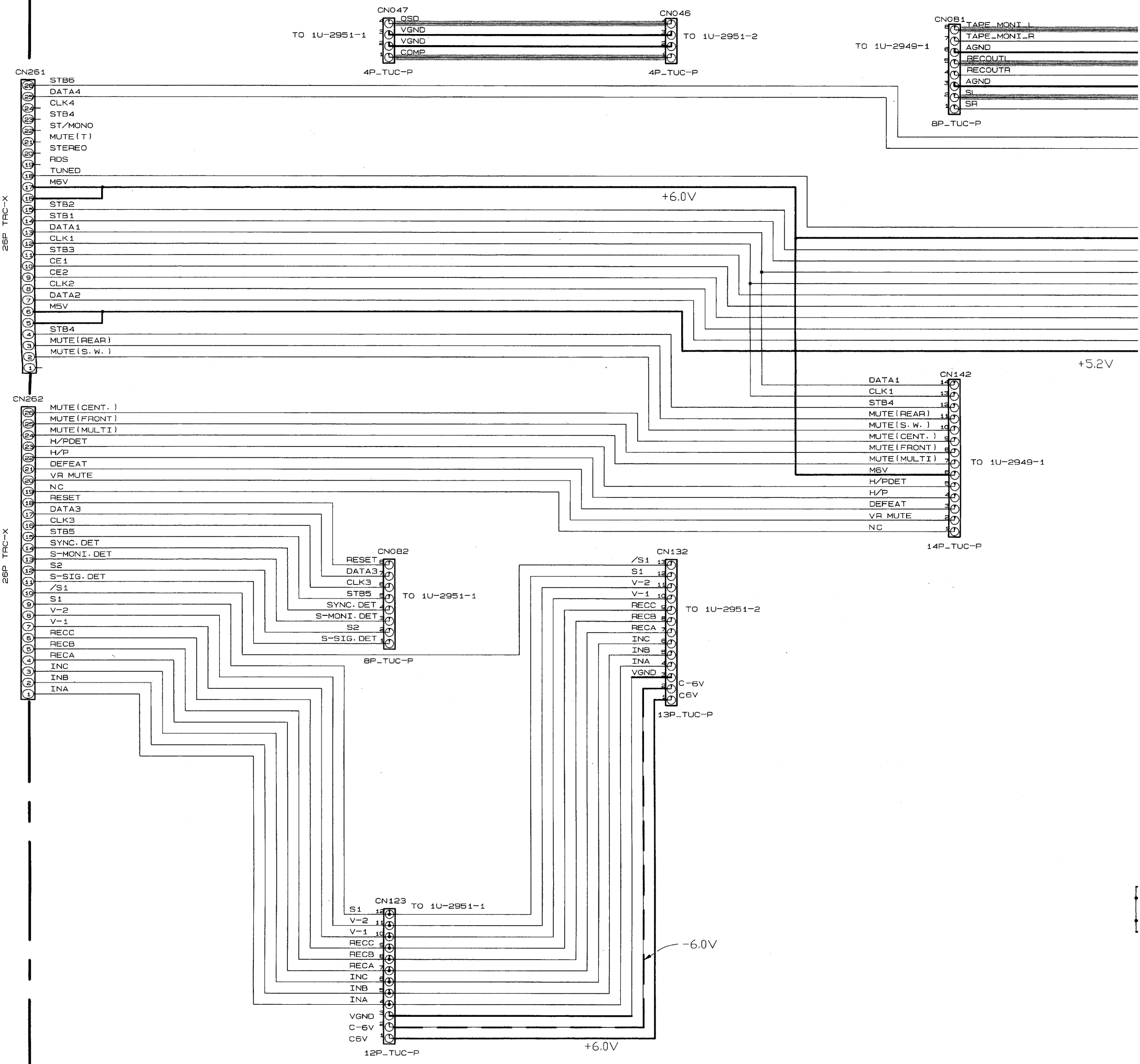

1U-2958-2
WIRING_UNIT

NOTES

ALL RESISTANCE VALUES IN OHM. k=1,000 OHM, M=1,000,000 OHM

ALL CAPACITANCE VALUES IN MICRO FARAD. P=MICRO-MICRO FARAD

EACH VOLTAGE AND CURRENT ARE MEASURED AT NO SIGNAL INPUT CONDITION.

CIRCUIT AND PARTS ARE SUBJECT TO CHANGE WITHOUT PRIOR NOTICE.

WARNING:
Parts marked with this symbol ⚠ ▒▒ have critical characteristics.
Use ONLY replacement parts recommended by the manufacturer.

CAUTION:
Before returning the unit to the customer, make sure you make either (1) a leakage current check or (2) a line to chassis resistance check. If the leakage current exceeds 0.5 milliamps, or if the resistance from chassis to either side of the power cord is less than 240 kohms, the unit is defective.

WARNING:
DO NOT return the unit to the customer until the problem is located and corrected.

SCHEMATIC DIAGRAM (1U-2959-1 DSP. P.W.B. UNIT-1/2)

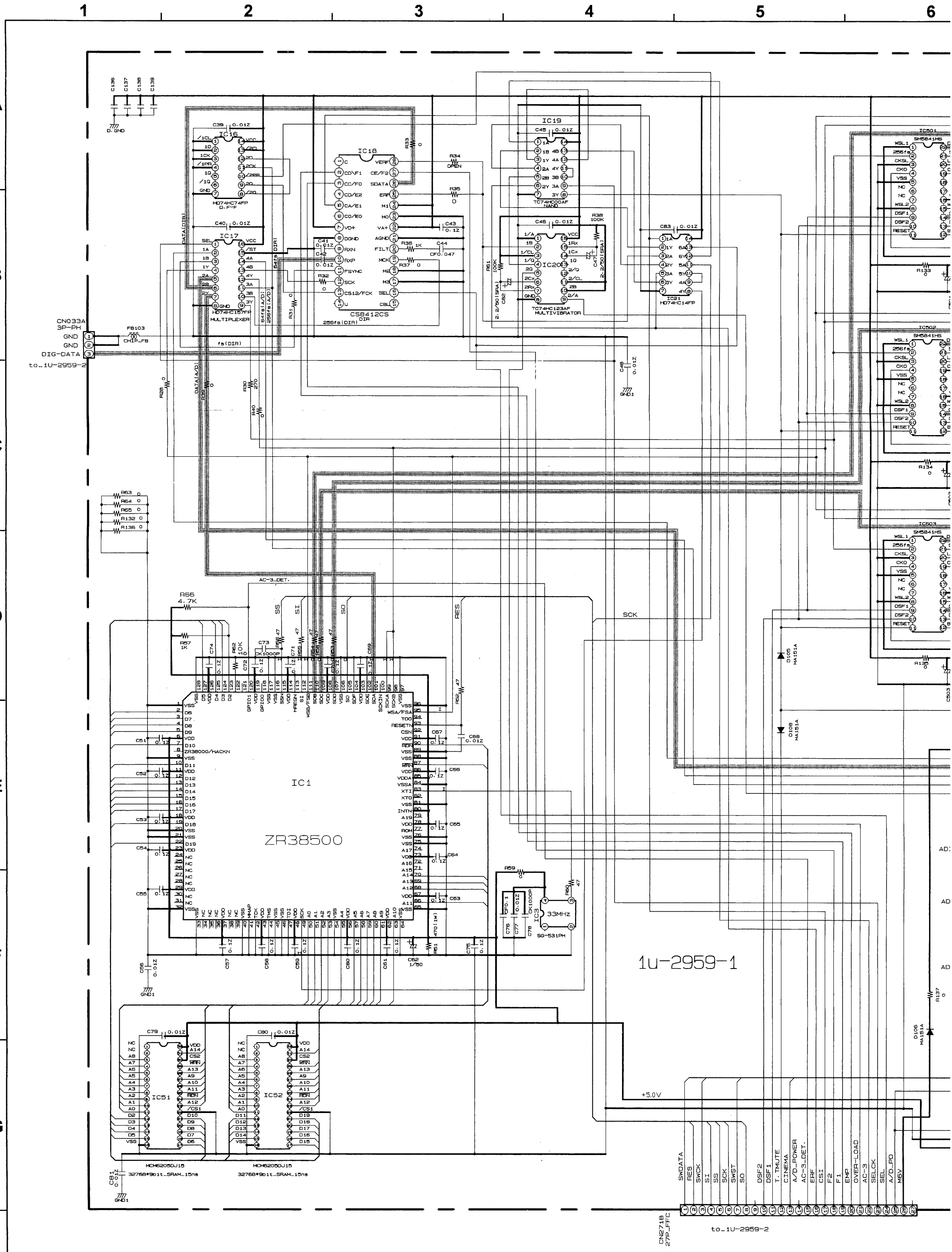

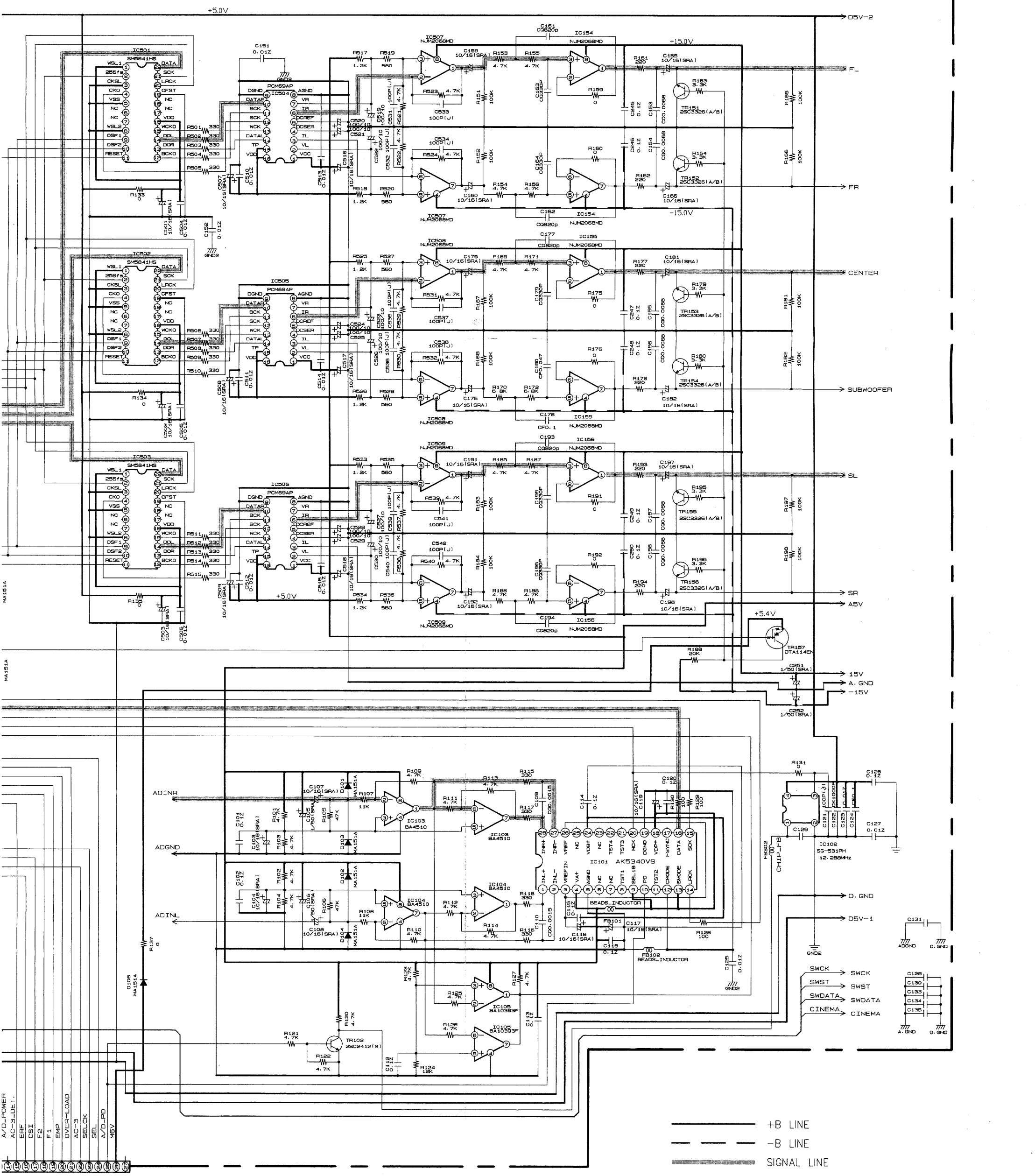

NOTES

ALL RESISTANCE VALUES IN OHM. k=1,000 OHM, M=1,000,000 OHM

ALL CAPACITANCE VALUES IN MICRO FARAD. P=MICRO-MICRO FARAD

EACH VOLTAGE AND CURRENT ARE MEASURED AT NO SIGNAL INPUT CONDITION.

CIRCUIT AND PARTS ARE SUBJECT TO CHANGE WITHOUT PRIOR NOTICE.

WARNING:

Parts marked with this symbol ⚠ ▒▒ have critical characteristics.
Use ONLY replacement parts recommended by the manufacturer.

CAUTION:

Before returning the unit to the customer, make sure you make either (1) a leakage current check or (2) a line to chassis resistance check. If the leakage current exceeds 0.5 milliamps, or if the resistance from chassis to either side of the power cord is less than 240 kohms, the unit is defective.

WARNING:

DO NOT return the unit to the customer until the problem is located and corrected.

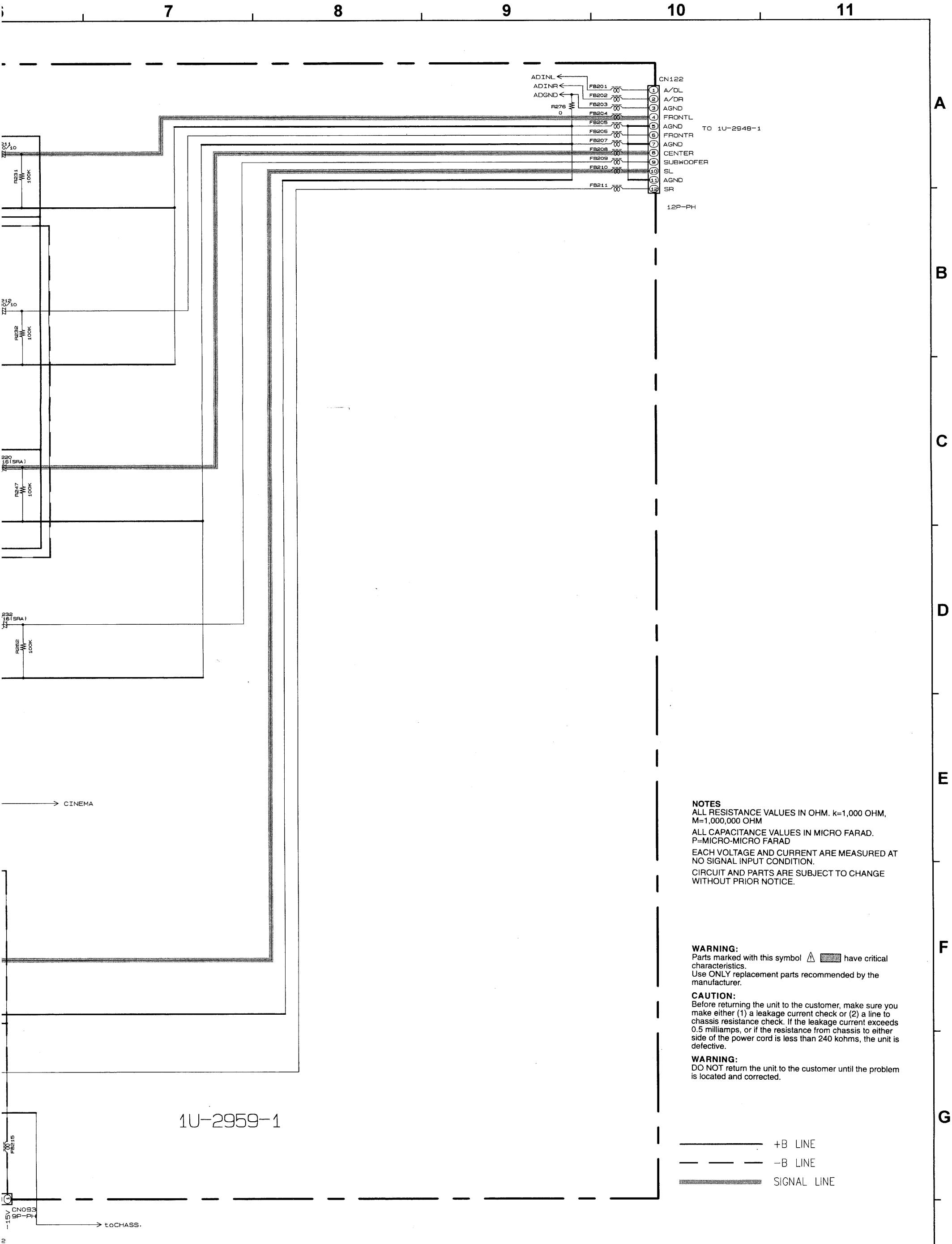

NOTES

ALL RESISTANCE VALUES IN OHM. k=1,000 OHM, M=1,000,000 OHM

ALL CAPACITANCE VALUES IN MICRO FARAD. P=MICRO-MICRO FARAD

EACH VOLTAGE AND CURRENT ARE MEASURED AT NO SIGNAL INPUT CONDITION.

CIRCUIT AND PARTS ARE SUBJECT TO CHANGE WITHOUT PRIOR NOTICE.

WARNING:
Parts marked with this symbol ⚠ ▒▒ have critical characteristics.
Use ONLY replacement parts recommended by the manufacturer.

CAUTION:
Before returning the unit to the customer, make sure you make either (1) a leakage current check or (2) a line to chassis resistance check. If the leakage current exceeds 0.5 milliamps, or if the resistance from chassis to either side of the power cord is less than 240 kohms, the unit is defective.

WARNING:
DO NOT return the unit to the customer until the problem is located and corrected.

+B LINE
−B LINE
SIGNAL LINE

EMATIC DIAGRAM (1U-2959-1 DSP. P.W.B. UNIT-2/2)

2 3 4 5 6 7

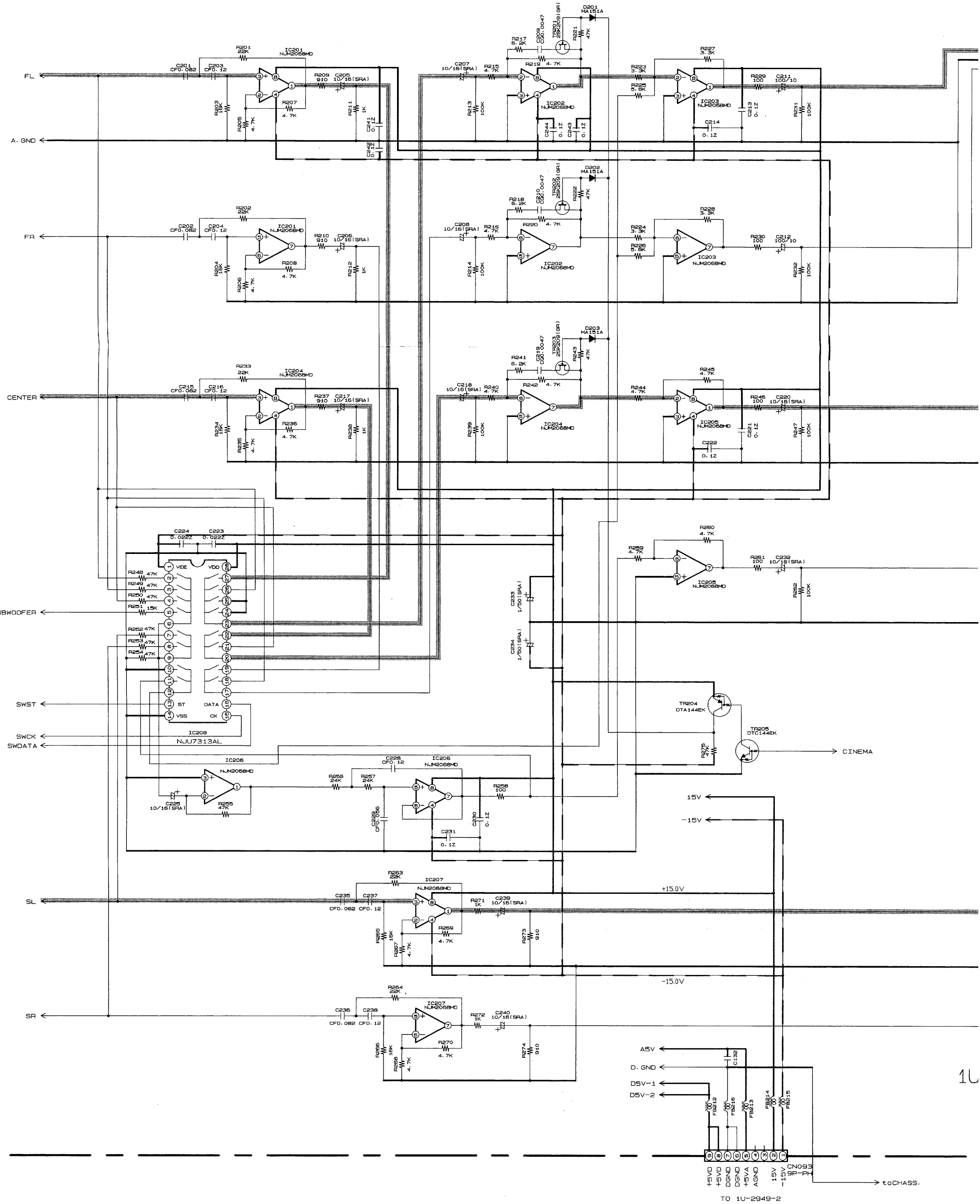

SCHEMATIC DIAGRAM (1U-2959-2 MICON P.W.B. UNIT-1/2)

1U-2959-2

OPTICAL INPUT
OPTICAL
IC310
GP1F32R

COAXIAL INPUT
COAXIAL-1

VDP
AC-3 RF
JK301
2P_PIN_JACK

Lch
Rch
G
JK302
MINI_JACK

C339 0.1Z
C338 47/16
L304 4.7uH
R367 4.7K
C346 0.01Z
FB301 0UH
C351 0.01Z
C350 10/16
C352 0.01Z
L308 2.2uH
R371 100
C354 33/25
R373 47K
C349 22P
D302 MA151A
R370 75
C348 0.01Z
R372 2.2K
IC314 TC74HCU04AF INVERTER
IC315 TC74HC151AF MULTIPLEXER
COAXIAL
OPTICAL-1
VDP_RF
+5.0V
LF305 EMI_FIL
DINA
DINB
DINC
C328 CK
R353 10
R351 10K

D301 MA151A
L301 2.2uH
C303 CK0.022
R305 510
R306 82
IC301 MC14577CP
TR301 2SC2412(S)
R310 4.7K
C306 1/50
R308 1K
R311 150
L302 68UH
TR303 2SC2412(S)
R314 1K
R307 1K
R309 1K
C307 1/50
R312 2.2K
C308 75P
R313 330
5V
-5V
GND
2SA1037(S/R) TR304
R316 1K
C309 CK0.01
F301 2.88MBPP[5VLT]
R315 1K
R320 10K
R318 1K
R317 10K
R319 1K
IC301 MC14577CP
C310 CK0.01
C327 BP 47/16(BP)
R349
R346 100K
R347 10K
R348 10K
R345 22K
C326 0.01Z
R343 100K
R344 220K
R301 10K
IC302 BA15218F
C304 1/50
TR302 DTA124EK
R302 10K
R303 10K
C305 1/50
R304 10K
IC303
R321 1K
R322 1K
R323 2.7K
R326 0
R324 2.7K
R325 0
C312 0.01Z
C311 10/16
IC304 TC74HCU04AF
R327 100
R328 68K
C313 CF0.47
R334 220K
R335 7.5K
R331 10K
R332 10K
IC302 BA15218F
R333 220K
C315 CF0.47
C314 CK1000P
GND13
R329 68
C318 0.01Z
C319 0.01Z
C316 0.1Z
IC307 46.080MHZ SG-531PH
R337 10K
R338 10K
R339 10K

IC317 CX20106A
C359 0.1Z
+5.4V
D303 MA151A
M6V
TR309 DTA114EK
R379 100
REMOCON
MGND
R375 39K
C355 1/50
R377 47
C357 3.3/50
330P(J)
C358
R378 160K
R374 100
R376 1K
C356 1/50

DOUT
DIN
XSEL
PSEL
EPCK
EYEI
EYEQ
BTR
ELB
C9M
TSTINB
GND
IDST
IDCK
IDO
WINGT
SYSTO
SYST1
ADSTO
ADST1
GND
VDD
XOUT
XIN
TM0
TM1
TM2
RFSFT

NOTES
ALL RESISTANCE VALUES IN OHM. k=1,000 OHM, M=1,000,000 OHM
ALL CAPACITANCE VALUES IN MICRO FARAD. P=MICRO-MICRO FARAD
EACH VOLTAGE AND CURRENT ARE MEASURED AT NO SIGNAL INPUT CONDITION.
CIRCUIT AND PARTS ARE SUBJECT TO CHANGE WITHOUT PRIOR NOTICE.

WARNING:
Parts marked with this symbol ⚠ ▒▒ have critical characteristics.
Use ONLY replacement parts recommended by the manufacturer.

CAUTION:
Before returning the unit to the customer, make sure you make either (1) a leakage current check or (2) a line to chassis resistance check. If the leakage current exceeds 0.5 milliamps, or if the resistance from chassis to either side of the power cord is less than 240 kohms, the unit is defective.

WARNING:
DO NOT return the unit to the customer until the problem is located and corrected.

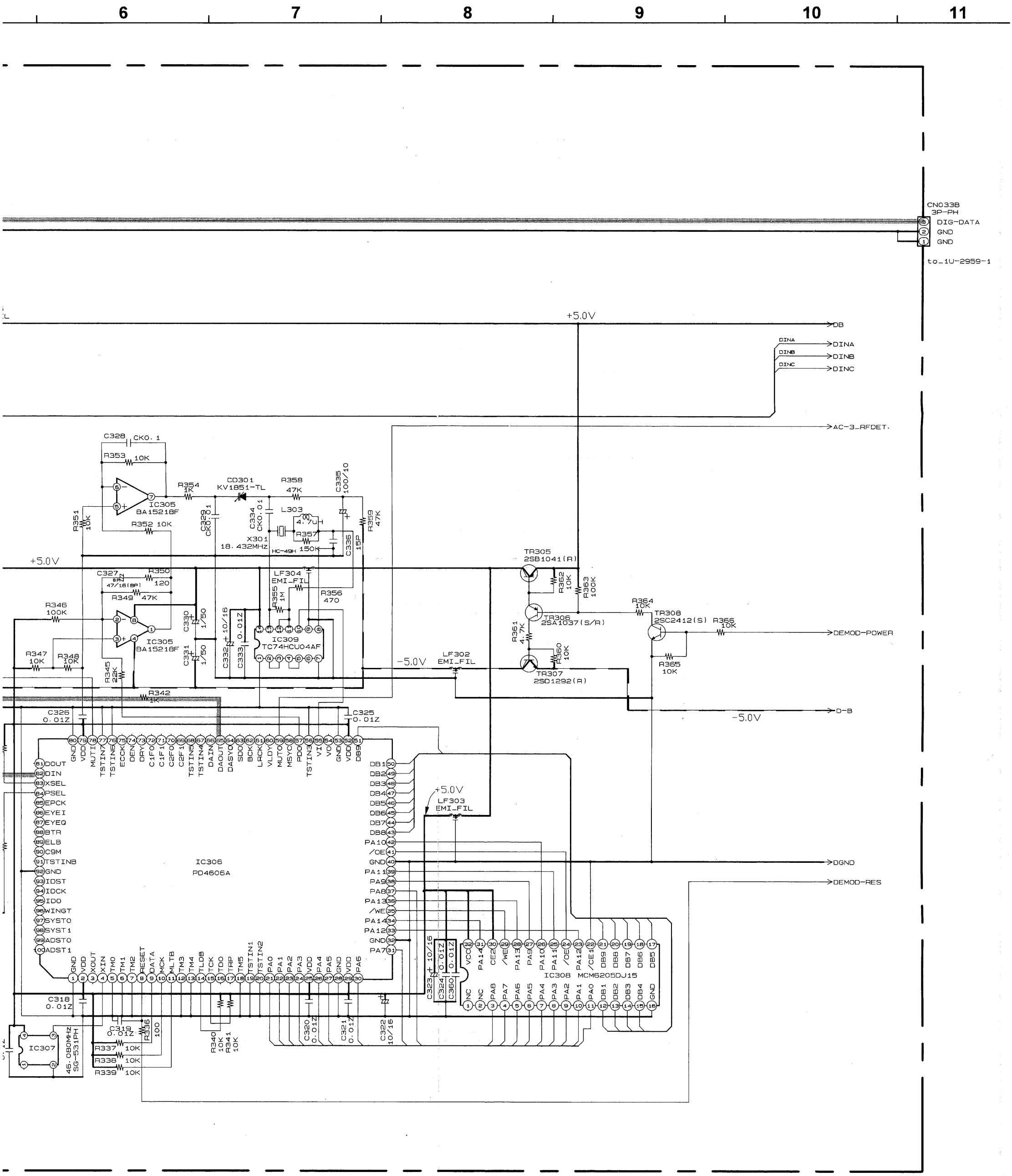
6
7
8
9
10
11
CN033B
3P-PH
DIG-DATA
GND
GND
to_1U-2959-1
+5.0V
DB
DINA
DINB
DINC
AC-3_RFDET.
DEMOD-POWER
D-B
DGND
DEMOD-RES
-5.0V
C328 CK0.1
R353 10K
IC305
BA15218F
R354 1K
CD301
KV1851-TL
R358 47K
C335 100/10
R351 10K
R352 10K
C329 CK0.01
C334 CK0.01
L303 4.7U
X301
18.432MHz
HC-49H
R357 150K
C336 15P
R359 47K
C327 6P
47/16(BP)
R349 47K
R350 120
R346 100K
R347 10K
R348 10K
R345 22K
C330 1/50
C331 1/50
C332 10/16
C333 0.01Z
IC309
TC74HCU04AF
LF304
EMI_FIL
R355 1M
R356 470
LF302
EMI_FIL
TR305
2SB1041(R)
R362 10K
R363 100K
TR306
2SA1037(S/R)
R361 4.7K
R360 10K
TR307
2SD1292(R)
R364 10K
TR308
2SC2412(S)
R366 10K
R365 10K
R342 1K
C326 0.01Z
C325 0.01Z
IC306
PD4606A
GND VDD MUTI TSTIN7 TSTIN6 ECCK DEN DRY C1F0 C1F1 C2F0 C2F1 TSTIN5 TSTIN4 DAIN DAOUT DASYO SDO BCK LRCK VLDY MUTO MSYC PDO TSTIN3 VI VO GND VDD DB9
DOUT DIN XSEL PSEL EPCK EYEI EYEQ BTR ELB C9M TSTINB GND IDST IDCK IDO WINGT SYSTO SYST1 ADSTO ADST1
DB1 DB2 DB3 DB4 DB5 DB6 DB7 DB8 PA10 /OE GND PA11 PA9 PA8 PA13 /WE PA14 PA12 GND PA7
GND VDD XOUT XIN TM0 TM1 TM2 RESET DATA MCK MLTB TM3 TM4 TLDB TCK TDO TRP TM5 TSTIN1 TSTIN2 PA0 PA1 PA2 PA3 VDD PA4 PA5 GND VDD PA6
C318 0.01Z
C319 0.01Z
R336 100
R337 10K
R338 10K
R339 10K
IC307
46.080MHz
SG-531PH
R340 10K
R341 10K
C320 0.01Z
C321 0.01Z
C322 10/16
+5.0V
LF303
EMI_FIL
C323 10/16
C324 0.01Z
C360 0.01Z
IC308 MCM6205DJ15
VCC PA14 CE2 /WE PA13 PA9 PA10 PA11 /OE PA12 /CE1 DB9 DB8 DB7 DB6 DB5
NC NC PA8 PA7 PA6 PA5 PA4 PA3 PA2 PA1 PA0 DB1 DB2 DB3 DB4 GND
+B LINE
-B LINE
SIGNAL LINE

SCHEMATIC DIAGRAM (1U-2951-1, 2 S-VIDEO & C-VIDEO P.W.B. UNIT)

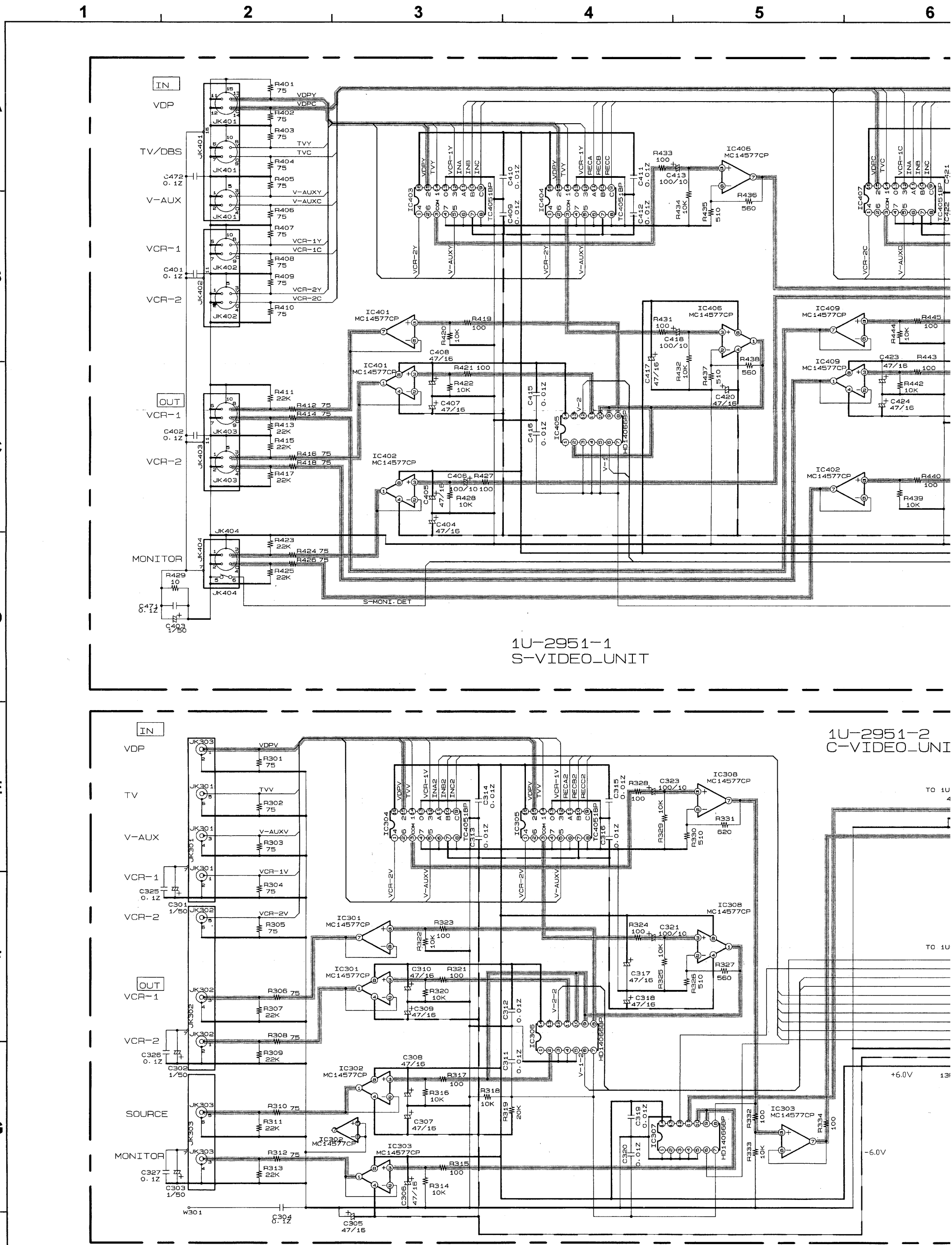

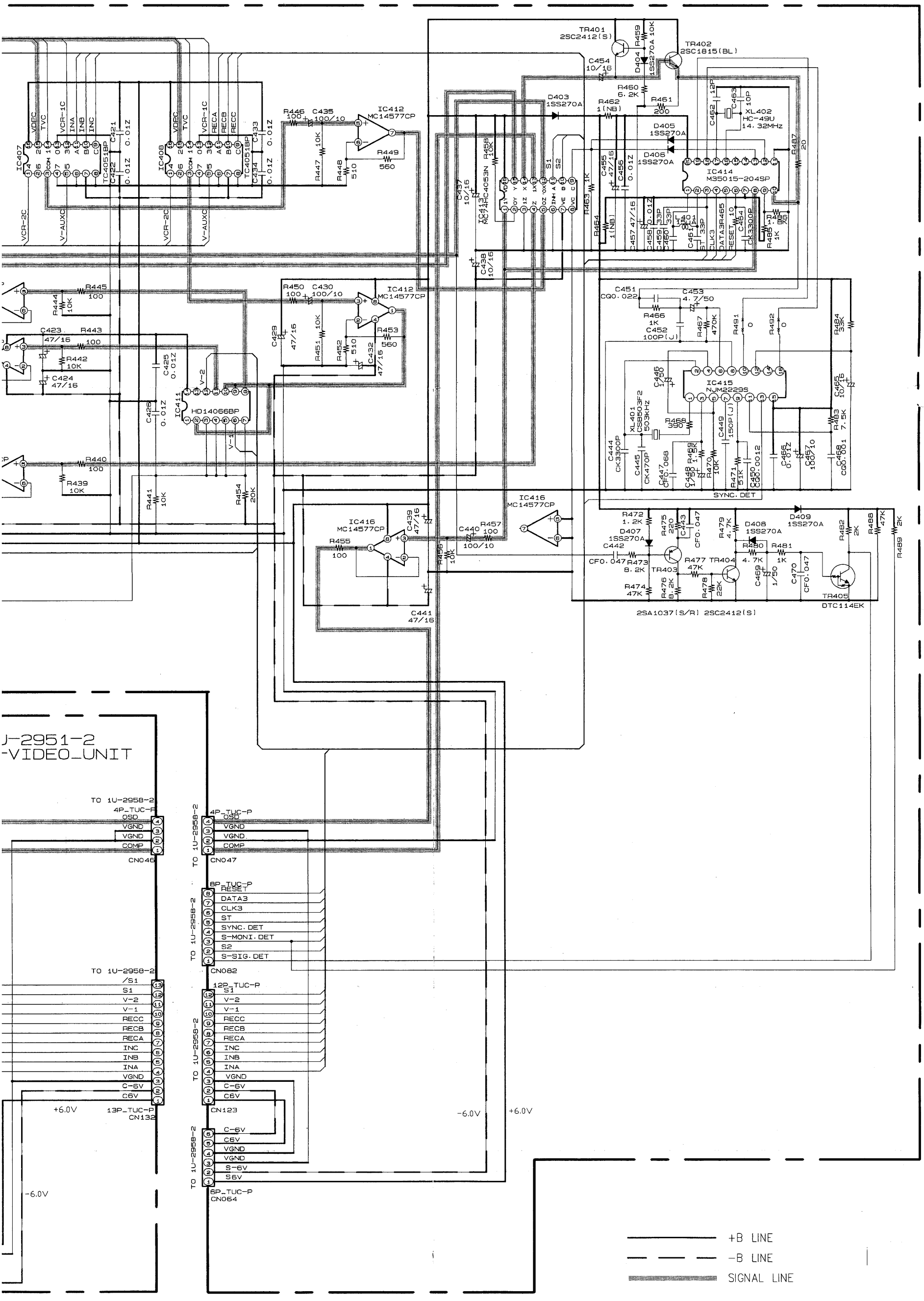

NOTES

ALL RESISTANCE VALUES IN OHM. k=1,000 OHM, M=1,000,000 OHM

ALL CAPACITANCE VALUES IN MICRO FARAD. P=MICRO-MICRO FARAD

EACH VOLTAGE AND CURRENT ARE MEASURED AT NO SIGNAL INPUT CONDITION.

CIRCUIT AND PARTS ARE SUBJECT TO CHANGE WITHOUT PRIOR NOTICE.

WARNING:
Parts marked with this symbol ⚠ ▨ have critical characteristics.
Use ONLY replacement parts recommended by the manufacturer.

CAUTION:
Before returning the unit to the customer, make sure you make either (1) a leakage current check or (2) a line to chassis resistance check. If the leakage current exceeds 0.5 milliamps, or if the resistance from chassis to either side of the power cord is less than 240 kohms, the unit is defective.

WARNING:
DO NOT return the unit to the customer until the problem is located and corrected.

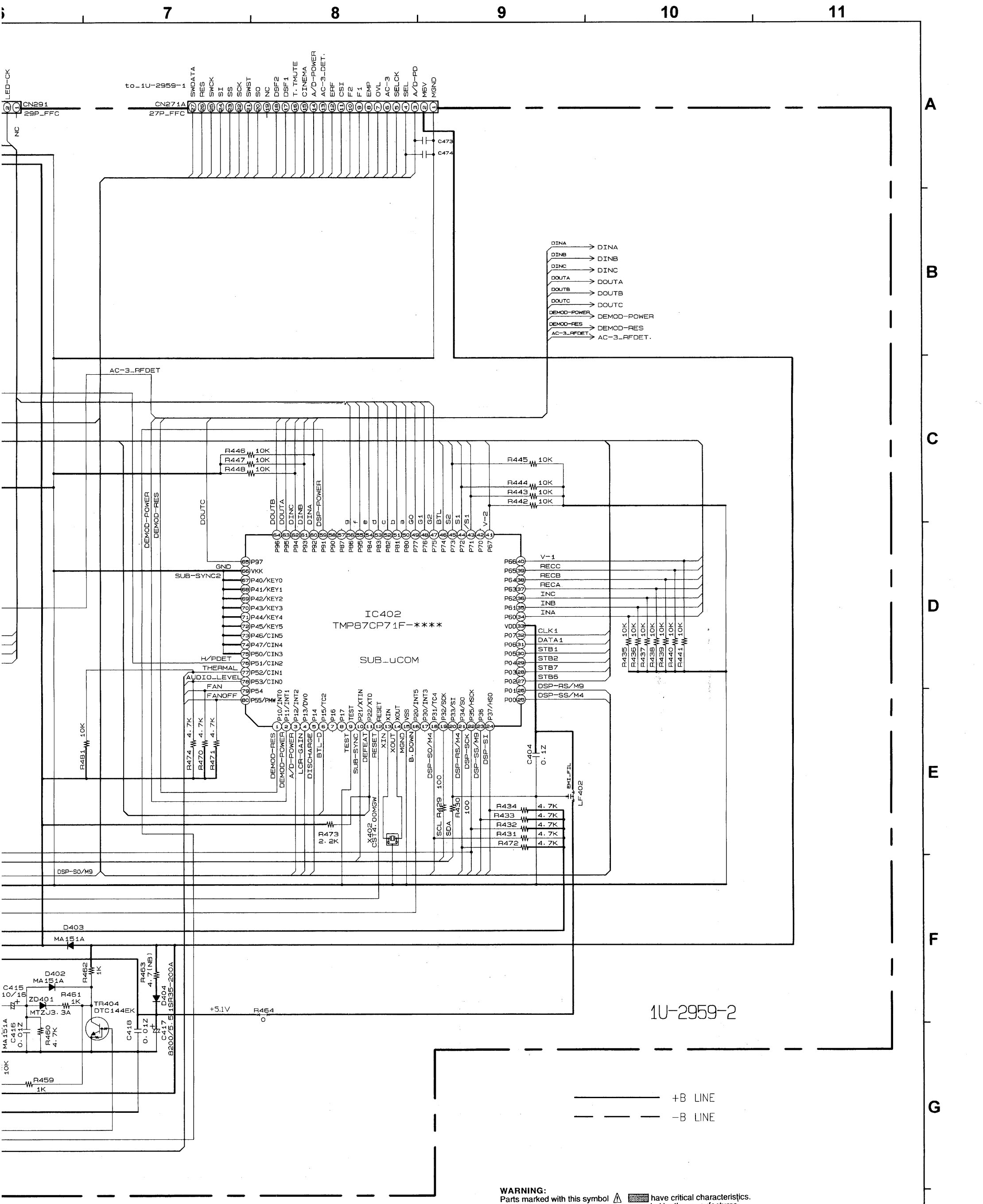

NOTES

ALL RESISTANCE VALUES IN OHM. k=1,000 OHM, M=1,000,000 OHM

ALL CAPACITANCE VALUES IN MICRO FARAD. P=MICRO-MICRO FARAD

EACH VOLTAGE AND CURRENT ARE MEASURED AT NO SIGNAL INPUT CONDITION.

CIRCUIT AND PARTS ARE SUBJECT TO CHANGE WITHOUT PRIOR NOTICE.

WARNING:
Parts marked with this symbol ⚠ ▒▒ have critical characteristics.
Use ONLY replacement parts recommended by the manufacturer.

CAUTION:
Before returning the unit to the customer, make sure you make either (1) a leakage current check or (2) a line to chassis resistance check. If the leakage current exceeds 0.5 milliamps, or if the resistance from chassis to either side of the power cord is less than 240 kohms, the unit is defective.

WARNING:
DO NOT return the unit to the customer until the problem is located and corrected.

SCHEMATIC DIAGRAM (1U-2959-2 MICON P.W.B. UNIT-2/2)

1 2 3 4 5 6

to_1U-2951-3

CN291 29P_FFC: M5V, MGND, STANDBY, REMOCON, K1, K2, K3, K4, K5, VSELA, VSELB, FL-CK, FL-DATA, FL-RS, GO, G1, G2, a, b, c, d, e, f, g, LED-OE, LED-LE, LED-SD, LED-CK, NC

to_1U-29 CN 27P

REMOCON ← REMOCON
M5V ←
MGND ←
[to_2/4]

CN072 7P-KR: PROTECT, VOL-MUTE, TR405 DTC144EK, RL-FRONT, RL-CENT., RL-REAR

CN261 26P_(TRC-X): STB6, S-MONI. DET, S-SIG. DET, SYNC. DET, M6V, H/PDET, STB2, STB1, DATA1, CLK1, STB3, CE1, CE2, CLK2, DATA2, M5V, STB7, MUTE-REAR, MUTE-S. W.

CN262 26P_(TRC-X): MUTE-CENT., MUTE-FRONT, MUTE-MULTI, H/PDET, H/P, DEFEAT, VR MUTE, NC, RESET, DATA3, CLK3, STB5, SYNC. DET, S-MONI. DET, S2, S-SIG. DET, /S1, S1, V-2, V-1, RECC, RECB, RECA, INC, INB, INA

CN143 14P_(TRC-X): THERMAL, AUDIO_LEVEL, FAN, FANOFF, M6V, MGND, MGND, POWER, BDOWN, POWER, DB, DGND, DGND, D-B

IC401
TMP87CS71F-****
MASTER_uCOM

P97 GND, VKK, P40/KEY0 S-MONI. DET, P41/KEY1 S-SIG. DET, P42/KEY2 SYNC. DET, P43/KEY3 VSELA, P44/KEY4 VSELB, P45/KEY5 MODE, P46/CIN5 K5, P47/CIN4 K4, P50/CIN3 K3, P51/CIN2 K2, P52/CIN1 K1, P53/CIN0, P54, P55/PMW

P10/INT0 PROTECT, P11/INT1 DSP_CLK_IN, P12/INT2 SUB-SYNC, P13/DV0 DSP-SO/M9, P14, P15/TC2, P16, P17, TEST, P21/XTIN X401, P22/XTO X401, RESET CST4.00MGW, XIN, XOUT, VSS MGND, P20/INT5 B.DOWN, P30/INT3 REMOCON, P31/TC4 SDA, P32/SCK CLK3, P33/SI STB5, P34/SO DATA3, P35/HSCK, P36, P37/HSO

P66 STB3, P65 CLK2, P64 DATA2, P63 CE1, P62 CE2, P61 AC-3_RFDET. AC-3_RFDET, P60 VOL-MUTE, VDD, P07 LED-OE, P06 LED-LE, P05 LED-SD, P04 LED-CK, P03 RL-REAR, P02 RL-CENT., P01 RL-FRONT, P00 RESET

DSF2: EAF, CSI, F2, F1, EMP, AC-3_DET., OVL, POWER, H/P, MUTE-S. W., MUTE-MULTI, MUTE-REAR, MUTE-CENT., MUTE-FRONT, STANDBY

DSF1: FL-CK, FL-DATA, FL-RS, AC-3, SELCK, SEL, A/D-PD

R402 4.7K, R403 4.7K, R404 4.7K, R405 4.7K, R406 4.7K
R487 10K, R415 10K, R414 10K, R413 10K, R412 10K
R407 10K, R408 10K, R409 10K, R410 10K, R411 10K
R469 10K
R424 10K
R426 510
R427 1K
R466 10K
R468 10K
R406 4.7K, R405 4.7K, R404 4.7K, R403 10K, R401 10K
R402 100K
R481 10K
C401 0.1Z
LF401 EMI-FIL
X401 CST4.00MGW

DEMOD-POWER
DEMOD-RES
DSP-SO/M9

+5.2V
+6.0V

TR401 DTA114EK
TR402 DTC144EK
TR403 2SC2412(S)
TR404 DTC144EK
D401 MA151A
D402 MA151A
D403 MA151A
ZD401 MTZJ3.3A
C412 10/16
C413 220/6.3
C414 CF0.12
C415 10/16
C416 0.01Z
C418 0.01Z
R454 10K
R455 220K
R456 10K
R457 4.7K
R458 10K
R459 1K
R460 4.7K
R461 1K
R462 1K
R463 4.7(NB)
FB401
FB402
C475
C477
C478
C472 0.01Z
C479

7 8 9 10 11

A B C D E F G H

TO 1U-2958-1

CN053
5P-KRs
Vkk
FL
FL
LED5V
LEDGND

FL101 FIP16FM7R

-32.6V
L101
120uH
C103
100/50

+5.3V

R129 47K … R144 47K
R145 47K … R162 47K

IC102
MSC1937-03

Vss
16G
15G
14G
13G
12G
11G
10G
9G
8G
7G
6G
5G
4G
3G
2G
1G
GND
PNT
TAIL
P
O
N
M
L
K
J
I
H
G
F
E
D
C
B
A
CK
DATA
RESET

C104 CK0.01
C105 330/6.3
C106 100P
FL-RS
R163 4.7K
R164 4.7K
FL-DATA
FL-CK
R195 4.7K

K1 K2 K3 K4 K5
R165 1K … R169 1K
VSELB
VSELA

S106
S118 S119 S120 S121 S122 S123
R185 200
R186 300
R187 360
R188 1K
R189 3K
S124 S125 S126 S127
R190 200
R191 300
R192 360

J105
J106
J107
J101
J102
J103
J104

R196 47K
S128 MASTER VOL
R197 47K
A B C
R198 100
R199 100
C109 CK0.01
C110 CK0.01
ZD101 MTZJ6.2A
ZD102 MTZJ6.2A

1U-2951-4
MASTER VR UNIT

5P-KR CN056
M5V
GND
K1
REMOCON
STANDBY
TO 1U-2949-3

CN094A
K1 K2 K3 DGND

CN094B
TO 1U-2949-3

S101 S102 S103 S104 S105
S107 S108 S109 S110 S111
S112 L1 L2 L3 L4 L5 L6
S113 S114 S115 S116 S117
R170 200
R171 300
R172 360
R173 1K
R174 3K
R175 200
R176 300
R177 360
R178 1K
R179 3K
R180 200
R181 300
R182 360
R183 1K
R184 3K

S101-127 TACT SW
1U-2951-5
KEY UNIT

	K1	K2	K3	K4	K5
L1		AC3RF	DSP SIMULATION	PHONO	VCR-2
L2	DIRECT	INPUT LEVEL DOWN	CINEMA EQ	CD	V. AUX
L3	STEREO	INPUT LEVEL UP	PANEL	TUNER	DAT /TAPE-1
L4	DOLBY SURROUND	ANALOG/ DIGITAL	REC/MULTI SOURCE	VDP/DVD	TAPE-2 MONI.
L5	MONO	PRESET SHIFT	REC/MULTI MODE	TV/DBS	
L6	5CH STEREO	PRESET DOWN	PRESET UP	VCR-1	

HOME THX

WIDE SCREEN

AVC MODEL

	K2	K3
L5	CH VR SELECT	
L6	CH VR DOWN	CH VR UP

+B LINE

-B LINE

CHEMATIC DIAGRAM (1U-2951-3 ~ 6 DISPLAY/MASTER VOLUME/SWITCH/VOLUME LED P.W.B. UNIT)

1 2 3 4 5 6 7

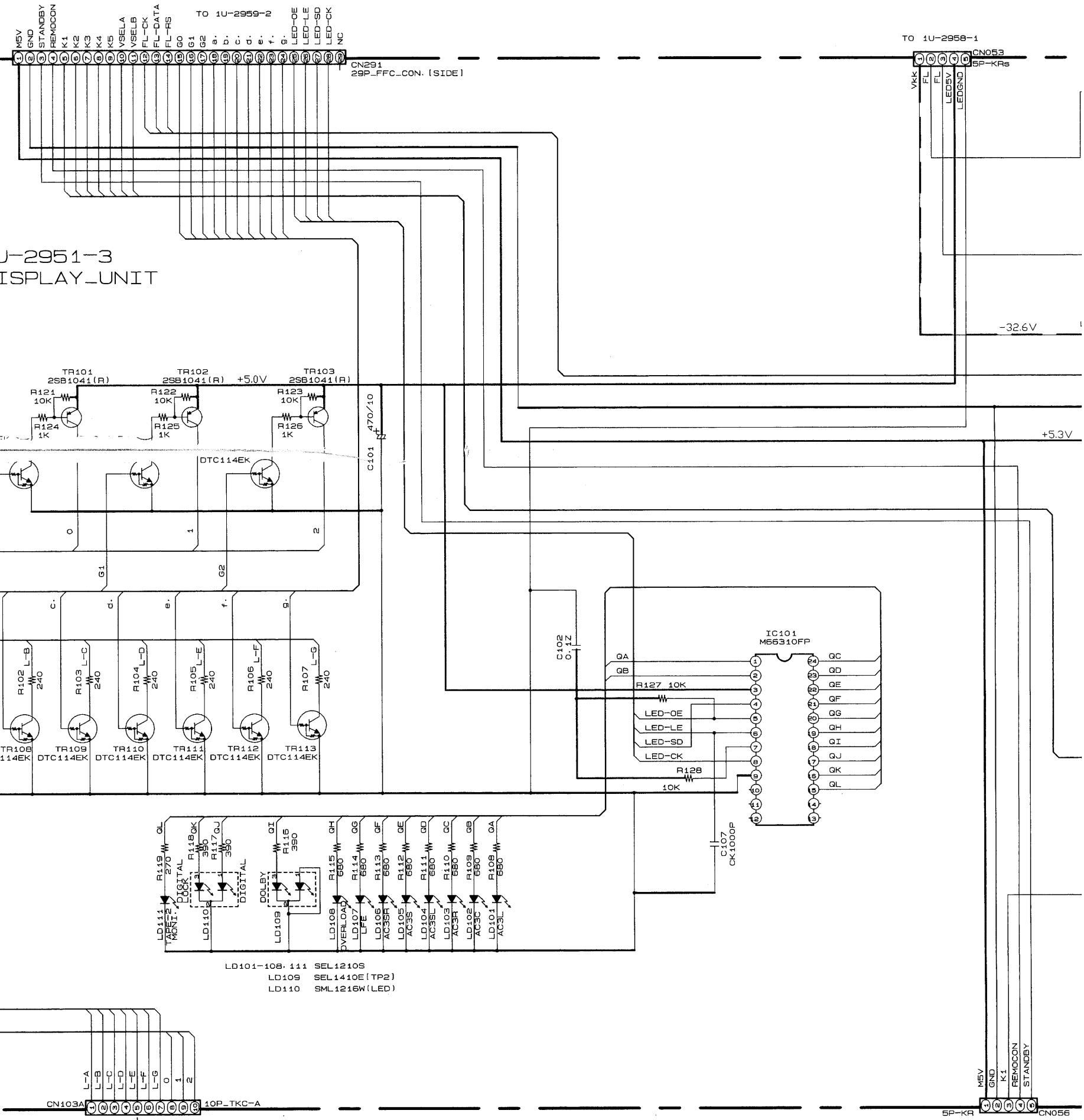

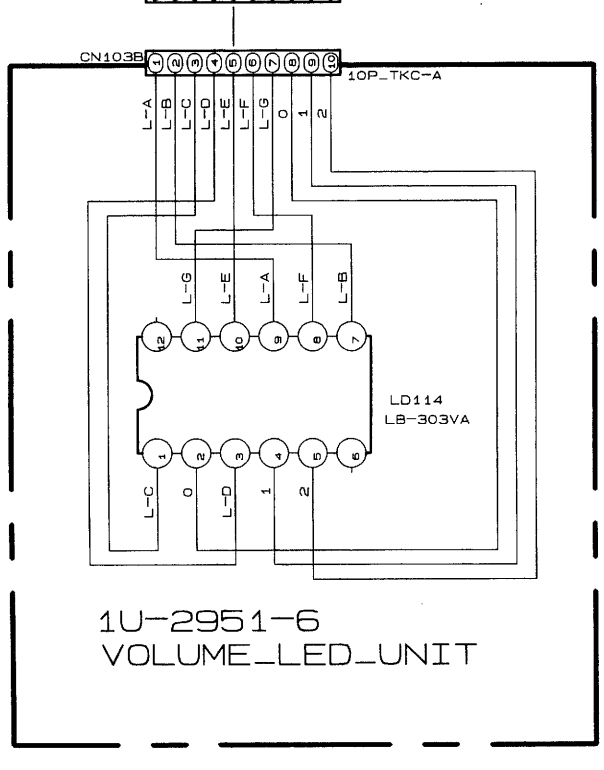

NOTES

ALL RESISTANCE VALUES IN OHM. k=1,000 OHM, M=1,000,000 OHM

ALL CAPACITANCE VALUES IN MICRO FARAD. P=MICRO-MICRO FARAD

EACH VOLTAGE AND CURRENT ARE MEASURED AT NO SIGNAL INPUT CONDITION.

CIRCUIT AND PARTS ARE SUBJECT TO CHANGE WITHOUT PRIOR NOTICE.

WARNING:
Parts marked with this symbol ⚠ ▒▒ have critical characteristics.
Use ONLY replacement parts recommended by the manufacturer.

CAUTION:
Before returning the unit to the customer, make sure you make either (1) a leakage current check or (2) a line to chassis resistance check. If the leakage current exceeds 0.5 milliamps, or if the resistance from chassis to either side of the power cord is less than 240 kohms, the unit is defective.

WARNING:
DO NOT return the unit to the customer until the problem is located and corrected.

REMOTE CONTROL UNIT (RC-820)

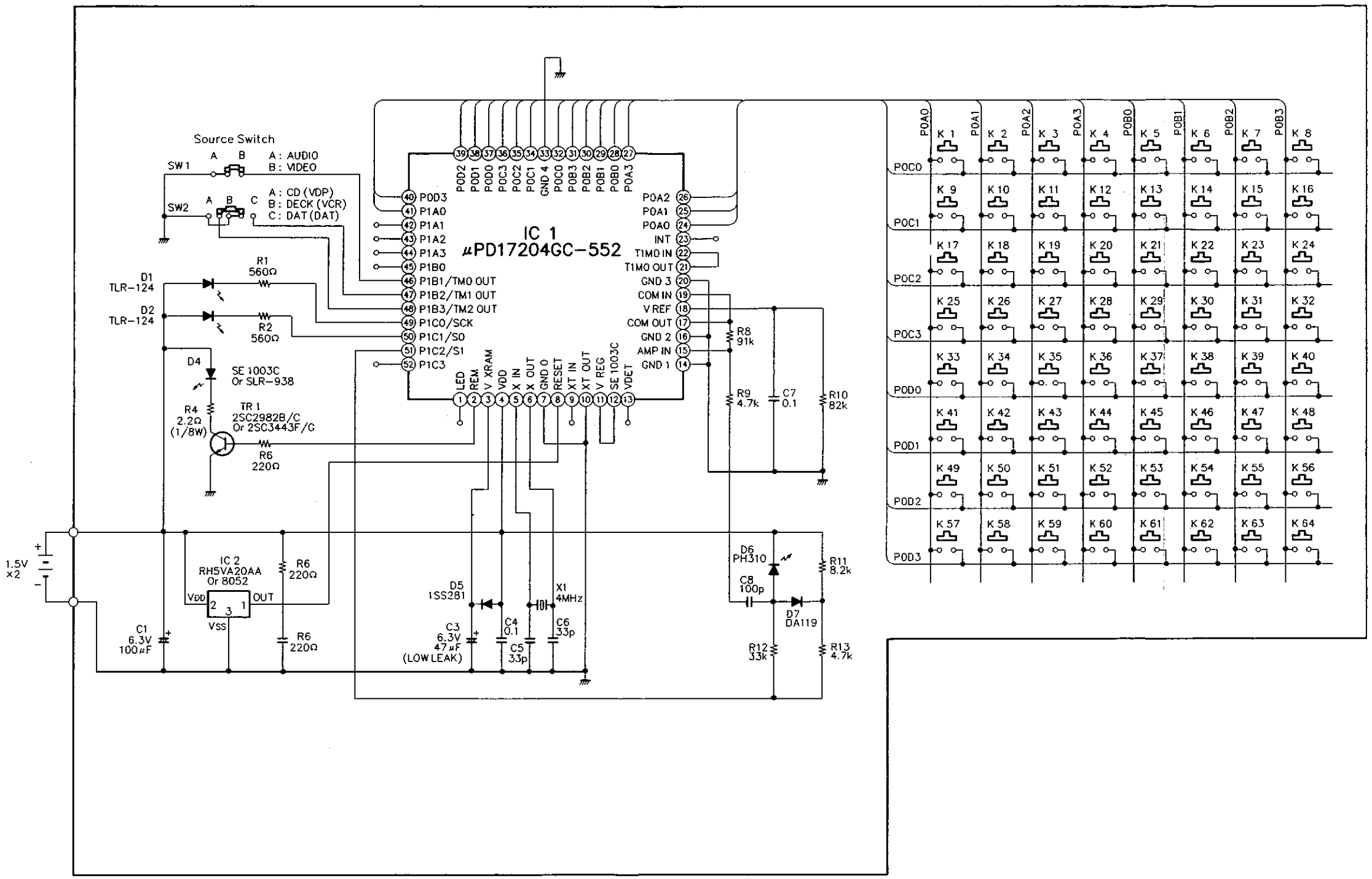

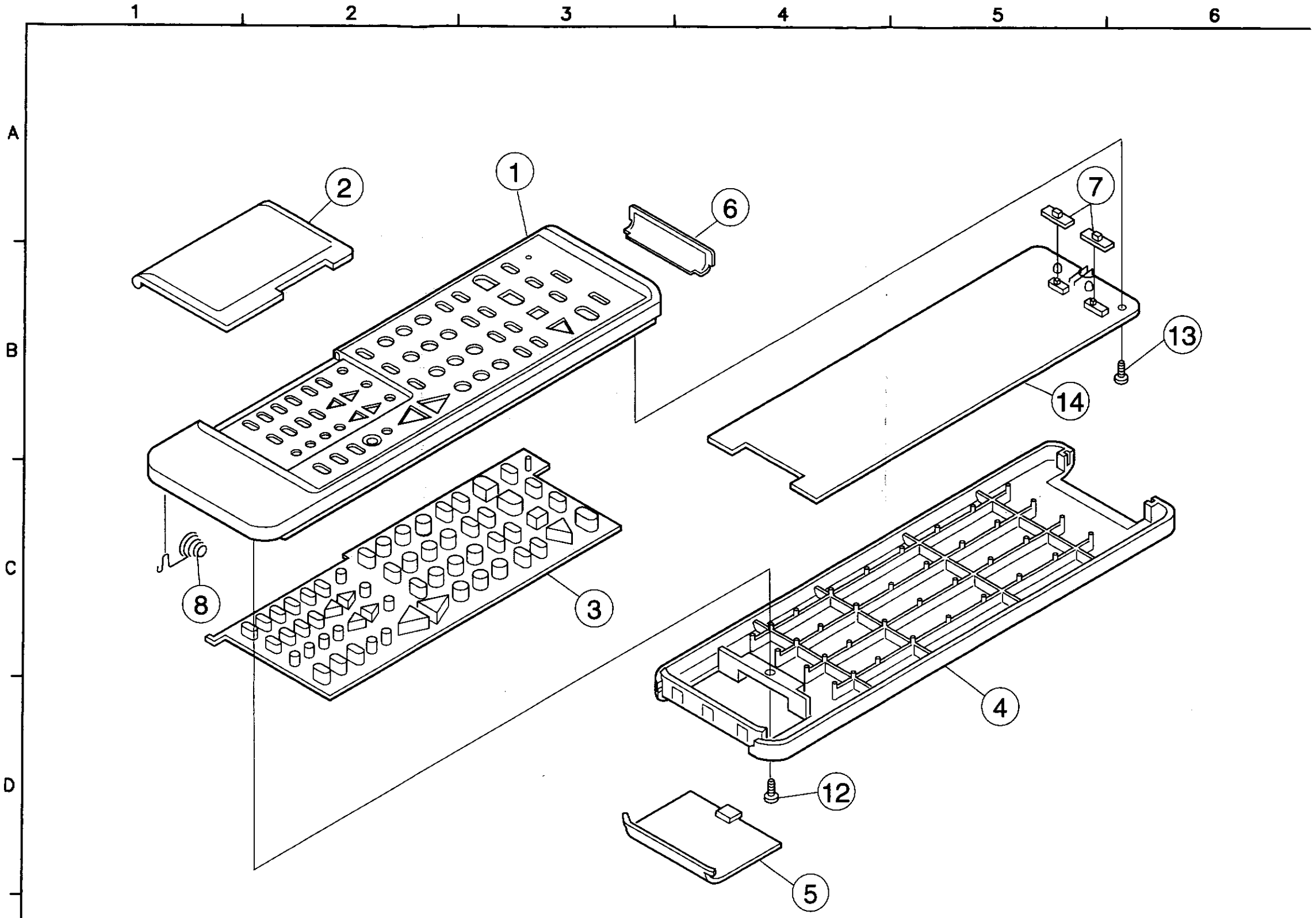

PARTS LIST OF REMOTE CONTROL UNIT (RC-820)

Ref. No.	Part No.	Part Name	Remarks	Q'ty
◉ 1	9H3 1000 164	Top Case (RC820) Ass'y		1s
◉ 2	9H3 100 0 168	Cover		1
◉ 3	9H3 1000 169	Switch Rubber		1
◉ 4	9H3 1000 166	Bottom Case		1
◉ 5	9H3 1000 167	Battery Cover		1
◉ 6	9H3 1000 148	Filter		1
7	9H3 1000 150	Slide Knob		2
8	9H3 1000 152	Coil Spring		1
9	—	—		
10	—	—		
11	—	—		
12	9H3 1000 154	Tapping Screw 2x6		1
13	9H3 1000 107	Tapping Screw 2x5		1
14	9H3 1000 161	Main P.W.B. Ass'y		1s
IC1	9H3 1000 162	IC µPD17204GC-552	µ-Com	1
IC2	9H3 1000 158	IC RH5VA10AA	vol. Detector	1
Q1	9H3 1000 070	Transistor 2SC2982	Chip	1
D1,2	9H3 1000 028	LED TLR124	Visible-Red	2
D4	9H3 1000 131	LED SE1003-C	Inflared	1
D5	9H3 1000 087	Diode 1SS2B1		1
D6	9H3 1000 029	Diode PH310	Photo-PIN	1
D7	9H3 1000 071	Diode DA119	Chip	1
X1	9H3 1000 088	Ceramic Resonator	KBR4, 0M503	1
SW1	9H3 1000 089	Slide Switch		1
SW2	9H3 1000 074	Slide Switch		1
C1	254 4213 034	Electrolytic 100µF/6.3V	CE04W0J101M	1
C3	254 4213 021	Electrolytic 47µF/6.3V	CE04W0J470M	1