BLOCK DIAGRAM

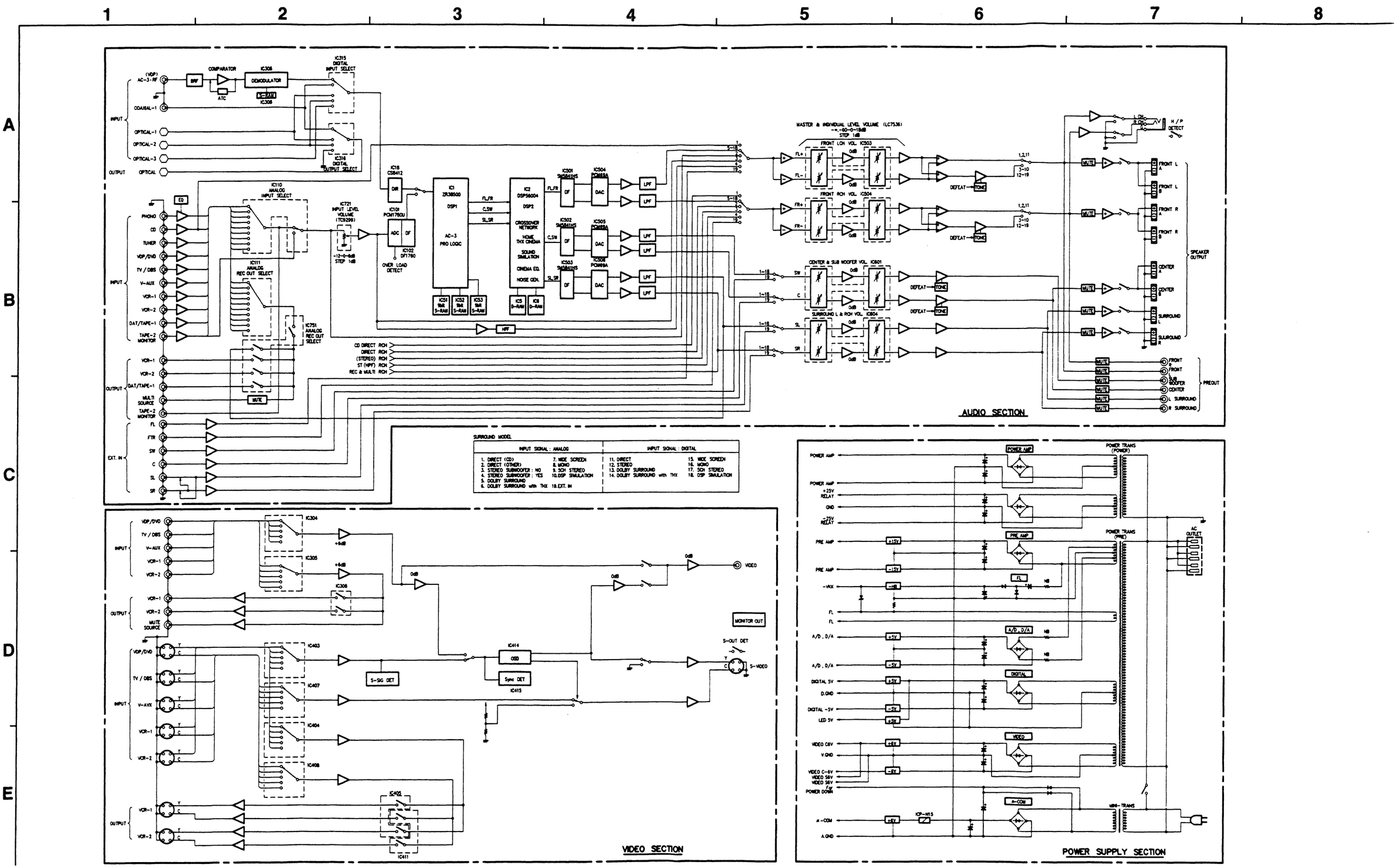

BLOCK LEVEL DIAGRAM

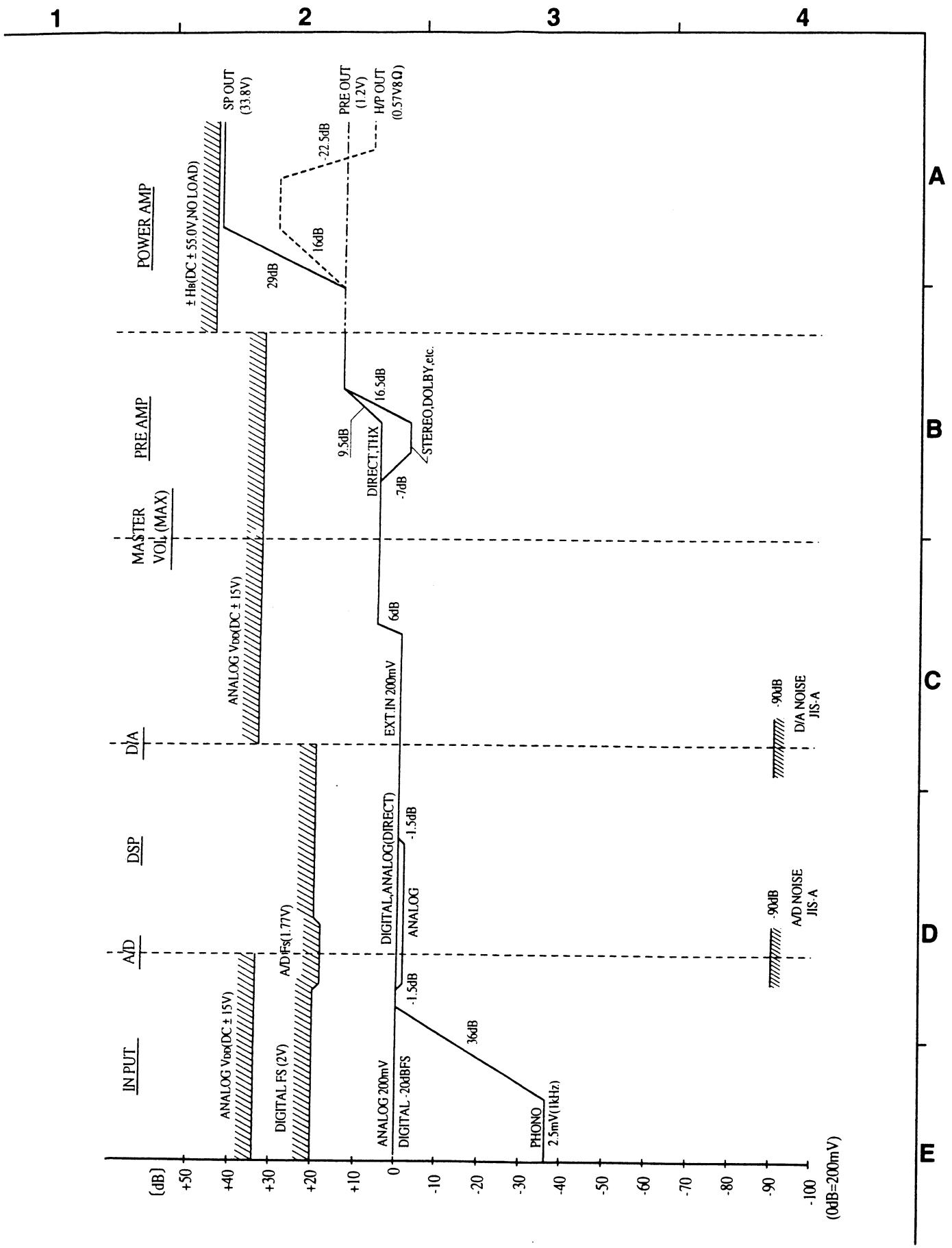

WIRING DIAGRAM

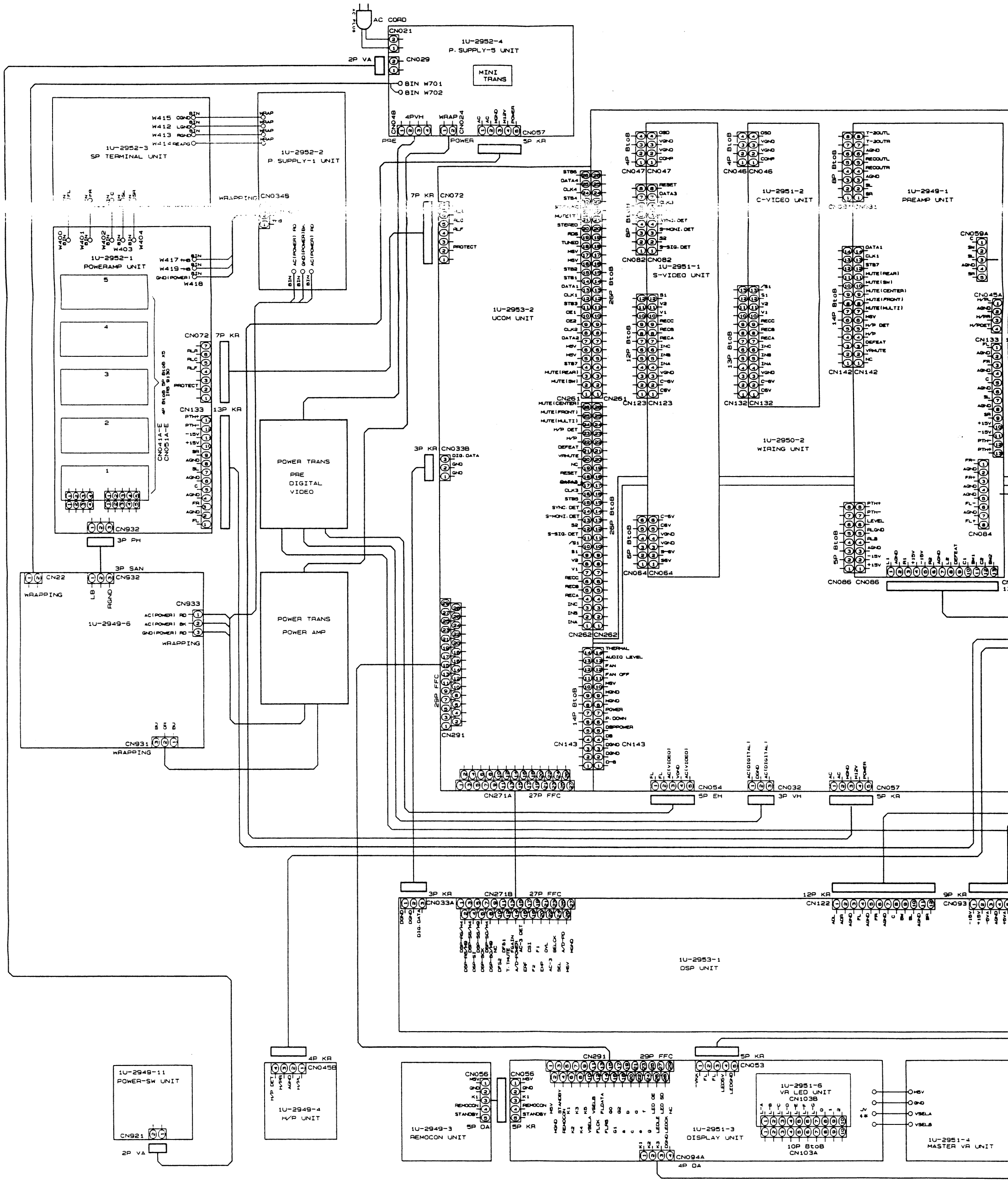

6 7 8 9 10 11

A B C D E F G H

1U-2951-2
C-VIDEO UNIT

1U-2949-1
PREAMP UNIT

1U-2949-5
E. VOL-2 UNIT

1U-2948-1
AUDIO IN UNIT

1U-2948-3
EXT. IN UNIT

1U-2950-2
WIRING UNIT

1U-2948-4
E. VOL-1 UNIT

1U-2949-2
P. SUPPLY-2 UNIT

1U-2950-1
P. SUPPLY-3 UNIT

1U-2950-4
TONE-2 UNIT

1U-2950-3
TONE-1 UNIT

1U-2951-6
VR LED UNIT

1U-2951-4
MASTER VR UNIT

1U-2951-5
SW UNIT

FAN-1

FAN-2

SCHEMATIC DIAGRAM (1/16)

	*1 LF101	*2 LF102	*3 R227	*4 R228	*5 C119	*6 C120	*7 C131	*8 C132	*9 C143	*10 C144	*11 C155	*12 C156
ASIA	250uH	250uH	4.7K	4.7K	330P	330P	330P	330P	330P	330P	330P	330
EUROPE	250uH	250uH	4.7K	4.7K	330P	330P	330P	330P	330P	330P	330P	330
TAIWAN R.O.C	—	—	0	0	—	—	—	—	—	—	—	—
JAPAN	—	—	0	0	—	—	—	—	—	—	—	—

1U-2948-1
AUDIO IN UNIT

TO 1U-2950-2

TO 1U-2950-2

	*37 C240-C242	*38 C121 C122	*39 C127 C128	*40 C129. C130 C221. C222	*41 C215 C216	*42 C217 C218	*43 C229 C230	*44 C231 C232	*45 C236 C237	*46 C153. C154. C202 C177. C178. C201	*47 C247 C248	*48 C249 C250
ASIA/EUROPE TAIWAN R.O.C	1/50	10/50	47/50	1/50	10/50	100/25	100/25	10/16	100/16	1/50	10/16	47/16
JAPAN	1/50 (ASF)	4.7/50 (ARS)	47/50 (ASF)	CQ0.01 (NH)	4.7/50 (ARS)	100/25 (ASF)	100/25 (ASF)	10/50 (ASF)	100/25 (ASF)	1/50 (ASF)	10/50 (ASF)	47/50 (ASF)

NOTES
ALL RESISTANCE VALUES IN OHM. k=1,000 OH
ALL CAPACITANCE VALUES IN MICRO FARAD.
EACH VOLTAGE AND CURRENT ARE MEASUR CONDITION.
CIRCUIT AND PARTS ARE SUBJECT TO CHANG NOTICE.

*5 C119	*6 C120	*7 C131	*8 C132	*9 C143	*10 C144	*11 C155	*12 C156	*13 C167	*14 C168	*15 C179	*16 C180	*17 C191	*18 C192	*19 C203	*20 C204	*21 C125	*22 C126	*23 C137	*24 C138	*25 C149	*26 C150	*27 C161	*28 C162	*29 C173	*30 C174	*31 C185	*32 C186	*33 C197	*34 C198	*35 C209	*36 C210
330P	330P	330P	330P	330P	330P	330P	330P	330P	330P	330P	330P	330P	330P	330P	330P	100P	100P	100P	100P	100P	100P	100P	100P	100P	100P	100P	100P	100P	100P	100P	100P
330P	330P	330P	330P	330P	330P	330P	330P	330P	330P	330P	330P	330P	330P	330P	330P	100P	100P	100P	100P	100P	100P	100P	100P	100P	100P	100P	100P	100P	100P	100P	100P
—	—	—	—	—	—	—	—	—	—	—	—	—	—	—	—	—	—	—	—	—	—	—	—	—	—	—	—	—	—	—	—
—	—	—	—	—	—	—	—	—	—	—	—	—	—	—	—	—	—	—	—	—	—	—	—	—	—	—	—	—	—	—	—

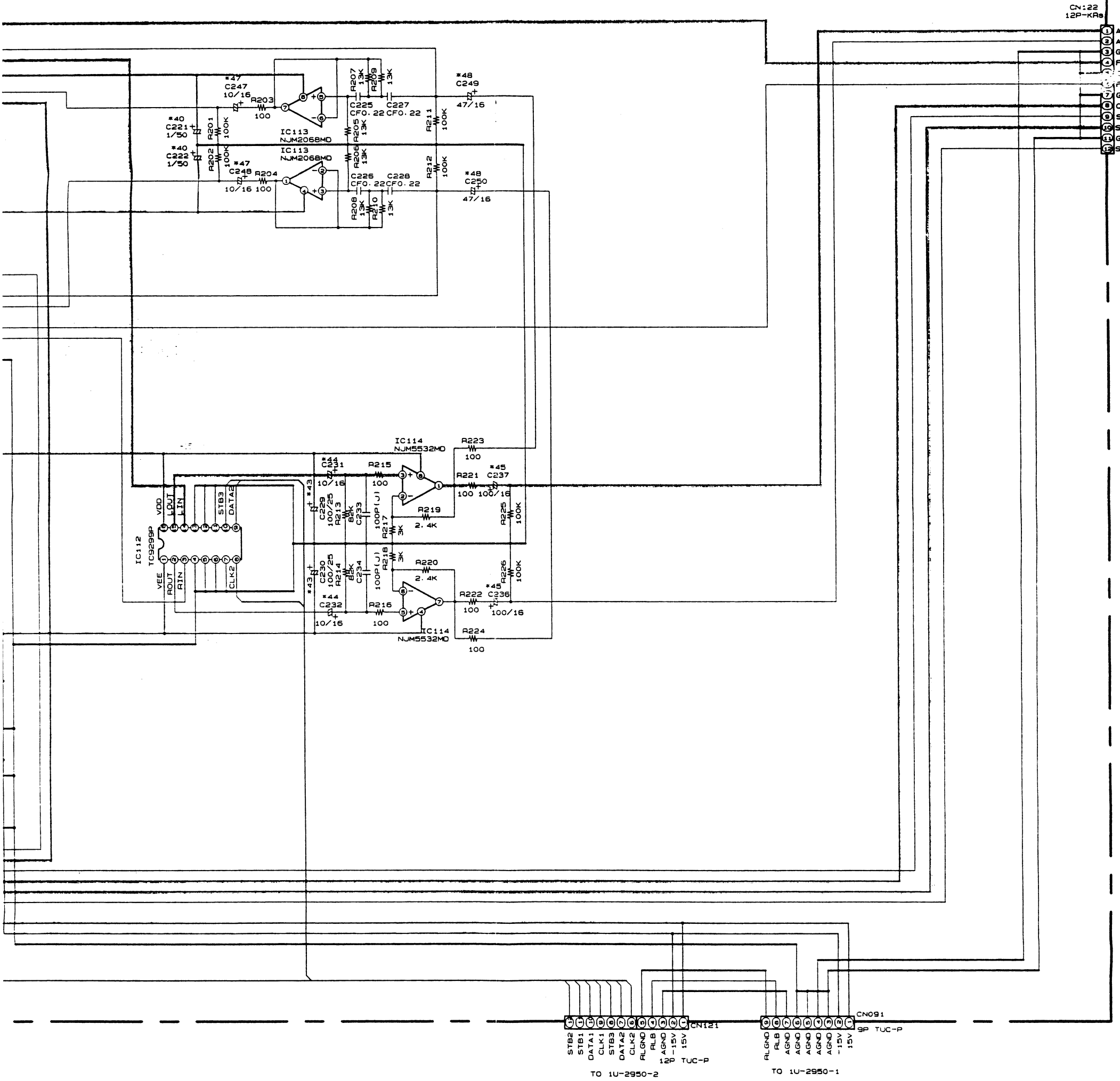

NOTES
ALL RESISTANCE VALUES IN OHM. k=1,000 OHM, M=1,000,000 OHM
ALL CAPACITANCE VALUES IN MICRO FARAD. P=MICRO-MICRO FARAD
EACH VOLTAGE AND CURRENT ARE MEASURED AT NO SIGNAL INPUT CONDITION.
CIRCUIT AND PARTS ARE SUBJECT TO CHANGE WITHOUT PRIOR NOTICE.

WARNING:
Parts marked with this symbol ⚠ ▒▒▒ have critical characteristics.
Use ONLY replacement parts recommended by the manufacturer.

CAUTION:
Before returning the unit to the customer, make sure you make either (1) a leakage current check or (2) a line to chassis resistance check. If the leakage current exceeds 0.5 milliamps, or if the resistance from chassis to either side of the power cord is less than 240 kohms, the unit is defective.

WARNING:
DO NOT return the unit to the customer until the problem is located and corrected.

+B LINE
−B LINE
SIGNAL LINE

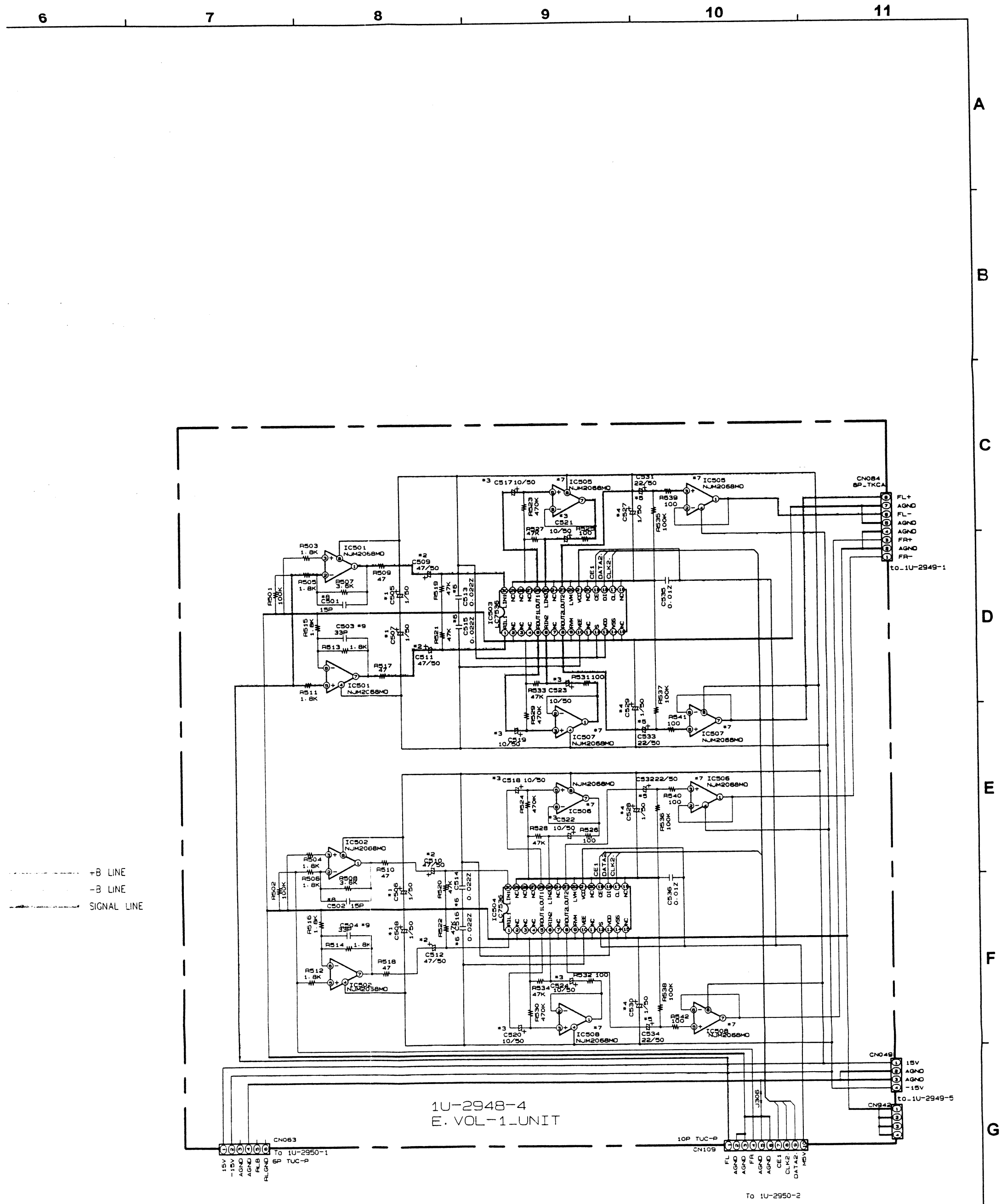

	*1 C505-C508	*2 C509-C512	*3 C517-C524	*4 C527-C530	*5 C531-C534	*6 C513-C516	*7 IC505-508	*8 C501.502	*9 C503.504
ASIA/EUROPE TAIWAN A.O.C	1/50	47/50	10/50	1/50	22/50	0.022Z	NJM2068MD	15P	30P
JAPAN	1/50 (ARSA)	47/50 (ARS)	10/50 (ARS)	10/50 (ARS)	22/50 (ARS)	——	NJM5532MD	CQ15P(NH)	CQ30P(NH)

SCHEMATIC DIAGRAM (4/16)

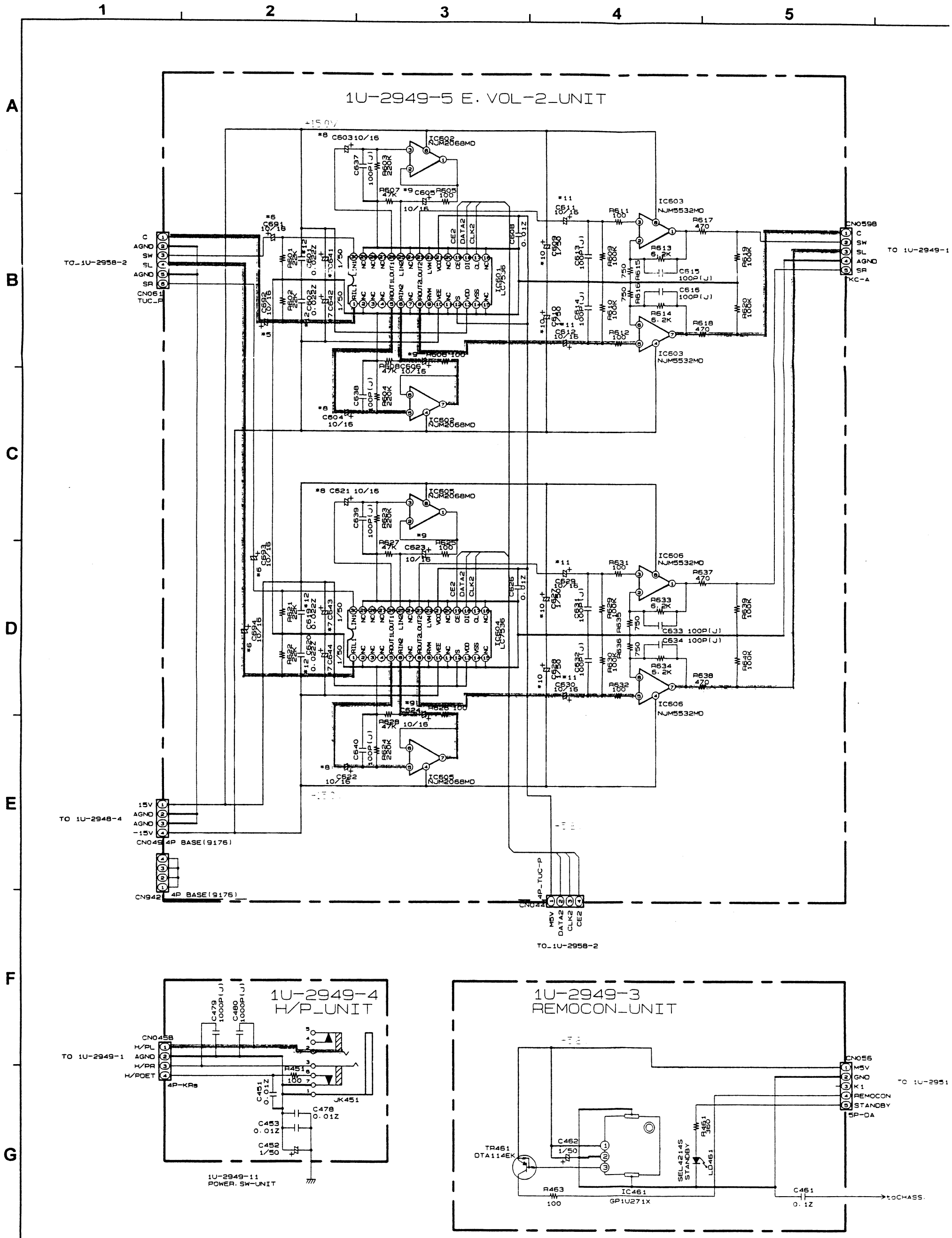

SCHEMATIC DIAGRAM (2/16) (3/16)

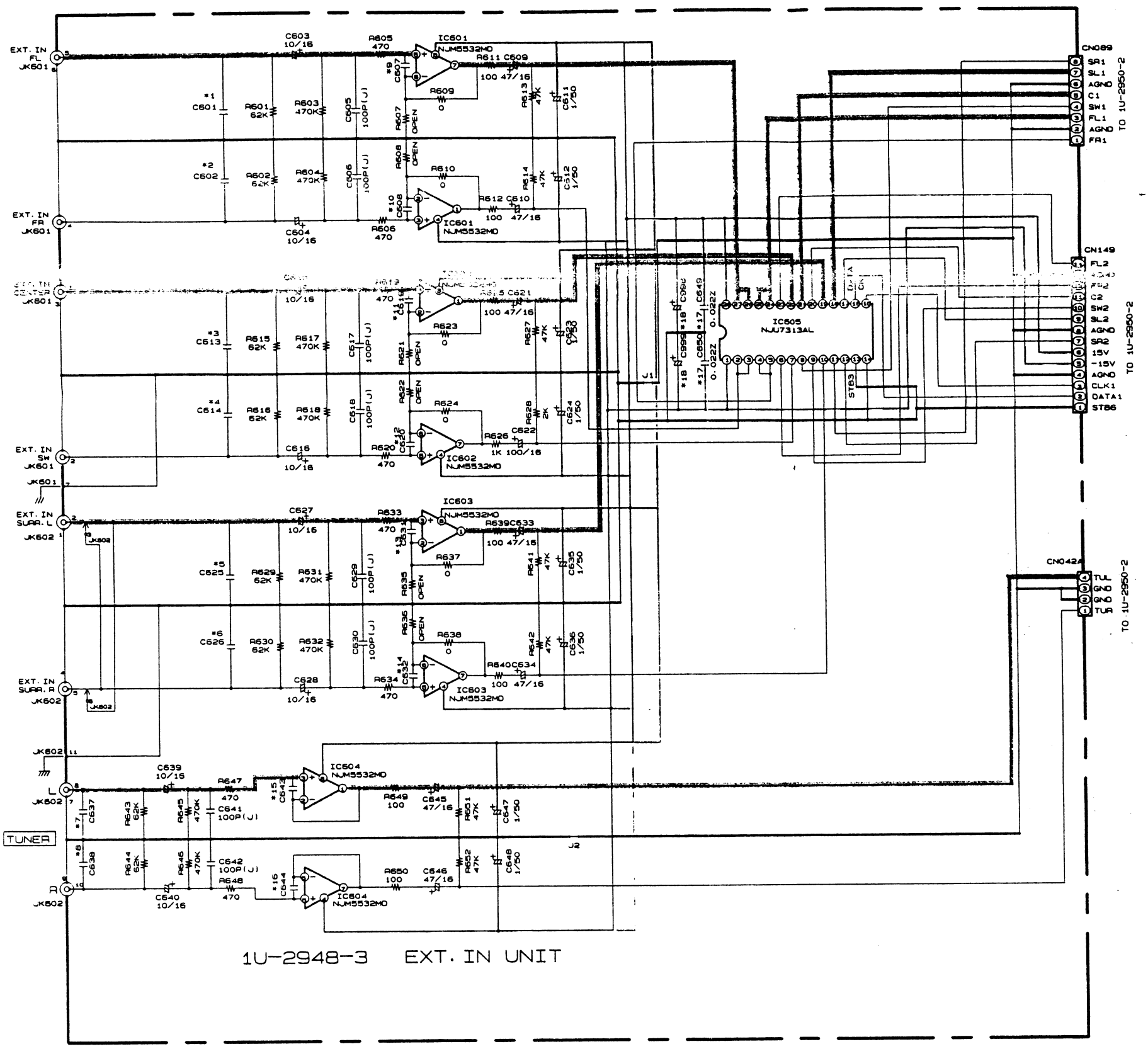

1U-2948-3 EXT. IN UNIT

	*1 C601	*2 C602	*3 C613	*4 C614	*5 C625	*6 C626	*7 C637	*8 C638	*9 C607	*10 C608	*11 C619	*12 C620	*13 C631	*14 C632	*15 C643	*16 C644	*17 C649. 650	*18 C998. 999
ASIA	330P	330P	330P	330P	330P	330P	330P	330P	100P	100P	100P	100P	100P	100P	100P	100P	0.022Z	—
EUROPE	330P	330P	330P	330P	330P	330P	330P	330P	100P	100P	100P	100P	100P	100P	100P	100P	0.022Z	—
TAIWAN R.O.C	—	—	—	—	—	—	—	—	—	—	—	—	—	—	—	—	0.022Z	—
JAPAN	—	—	—	—	—	—	—	—	—	—	—	—	—	—	—	—	CQ0.01 (NH)	100/50 (ARS)

NOTES

ALL RESISTANCE VALUES IN OHM. k=1,000 OHM, M=1,000,000 OHM

ALL CAPACITANCE VALUES IN MICRO FARAD. P=MICRO-MICRO FARAD

EACH VOLTAGE AND CURRENT ARE MEASURED AT NO SIGNAL INPUT CONDITION.

CIRCUIT AND PARTS ARE SUBJECT TO CHANGE WITHOUT PRIOR NOTICE.

WARNING:
Parts marked with this symbol ⚠ ▨ have critical characteristics.
Use ONLY replacement parts recommended by the manufacturer.

CAUTION:
Before returning the unit to the customer, make sure you make either (1) a leakage current check or (2) a line to chassis resistance check. If the leakage current exceeds 0.5 milliamps, or if the resistance from chassis to either side of the power cord is less than 240 kohms, the unit is defective.

WARNING:
DO NOT return the unit to the customer until the problem is located and corrected.

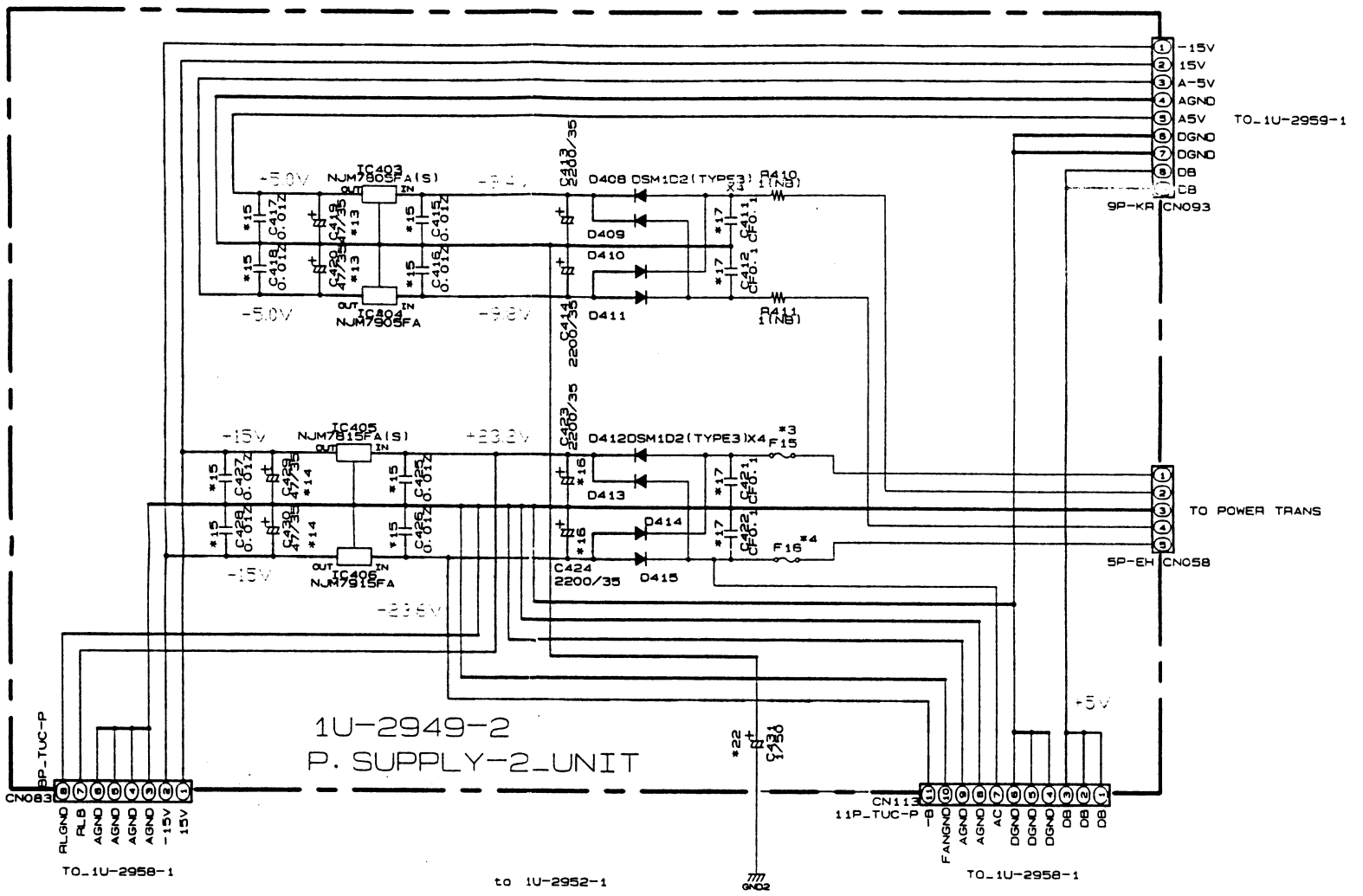

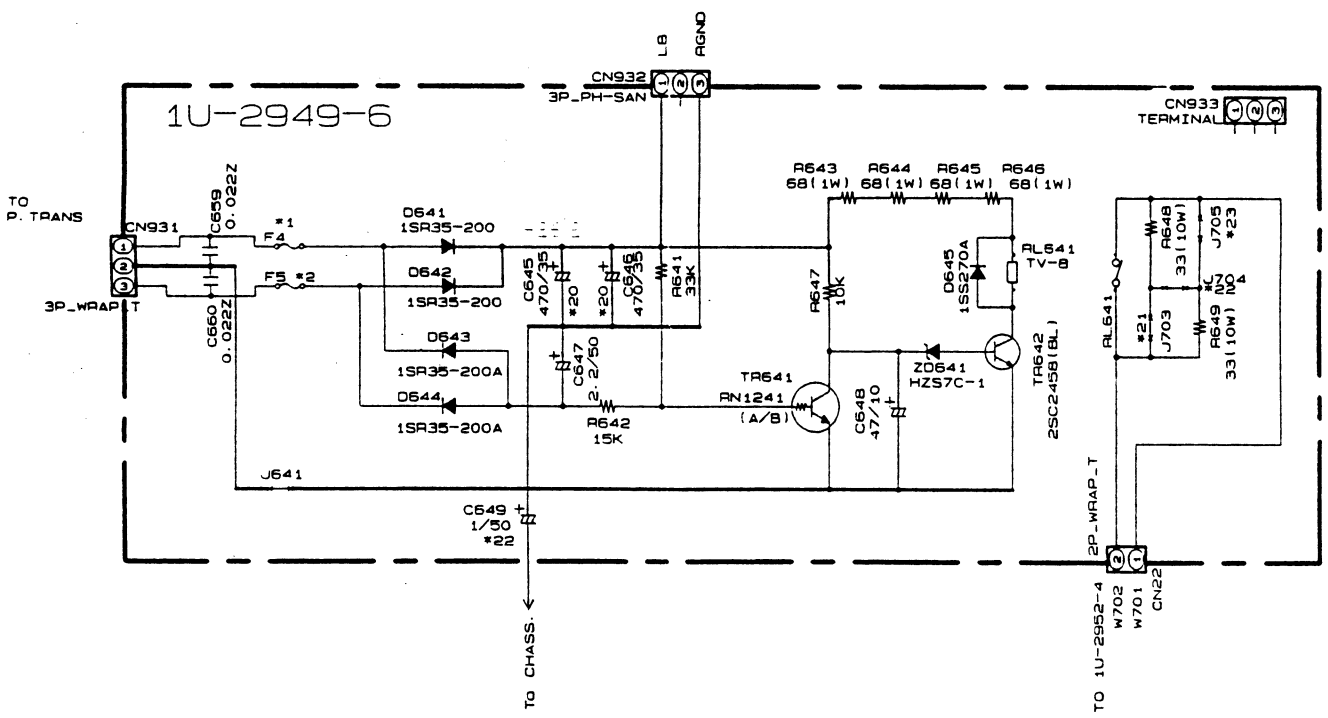

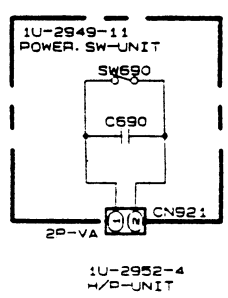

	*5 C692	*6 C691 C693. C694	*7 C641~C644	*8 C603. C604 C621. C622	*9 C605. C606 C623. C624	*10 C609. C610 C627. C628	*11 C611. C612 C629. C630	*12 C601. C602 C619. C620	*13 C419. C420	*14 C429. C430	*15 C415~C418 C425~C428	*16 C423. C424	*17 C411. C412 C421. C422	*18 C659. C660
ASIA/EUROPE TAIWAN R.O.C	10/16	10/16	1/50	10/16	10/16	1/50	10/16	0.022Z	47/35	47/35	0.01Z	2200/35	CFO.1	0.022Z
JAPAN	10/50 (ARS)	10/50 (ASF)	CQ0.01 (NH)	10/50 (ARS)	10/50 (ASF)	1/50 (ASF)	10/50 (ARS)	—	47/50 (ASF)	47/50 (ARS)	—	2200/50 (ASF)	CQ0.01 (NH)	CQ0.01 (NH)

	*19 C431. C649	*20 C645
ASIA/EUROPE TAIWAN R.O.C	1/50	470/35
JAPAN	1/50 (ASF)	470/35 (ASF)

	*21 J703	*22 J704	*23 J705
ASIA/EUROPE	—	○	—
TAIWAN R.O.C JAPAN	○	—	○

	*1 F4	*2 F5	*3 F15	*4 F16
ASIA	1A/250V 2061015029	1A/250V 2061015029	2A/250V 2061015061	2A/250V 2061015061
EUROPE	1A/250V 2061015029	1A/250V 2061015029	2A/250V 2061015061	2A/250V 2061015061
TAIWAN R.O.C	1A/125V 2061039034	1A/125V 2061039034	2A/125V 2061039063	2A/125V 2061039063
JAPAN	1A/125V 2061053007	1A/125V 2061053007	2A/125V 2061035041	2A/125V 2061035041

-3

+B LINE

-B LINE

SIGNAL LINE

NOTES

ALL RESISTANCE VALUES IN OHM. k=1,000 OHM, M=1,000,000 OHM

ALL CAPACITANCE VALUES IN MICRO FARAD. P=MICRO-MICRO FARAD

EACH VOLTAGE AND CURRENT ARE MEASURED AT NO SIGNAL INPUT CONDITION.

CIRCUIT AND PARTS ARE SUBJECT TO CHANGE WITHOUT PRIOR NOTICE.

WARNING:
Parts marked with this symbol ⚠ have critical characteristics.
Use ONLY replacement parts recommended by the manufacturer.

CAUTION:
Before returning the unit to the customer, make sure you make either (1) a leakage current check or (2) a line to chassis resistance check. If the leakage current exceeds 0.5 milliamps, or if the resistance from chassis to either side of the power cord is less than 240 kohms, the unit is defective.

WARNING:
DO NOT return the unit to the customer until the problem is located and corrected.

SCHEMATIC DIAGRAM (5/16)

1 2 3 4 5 6

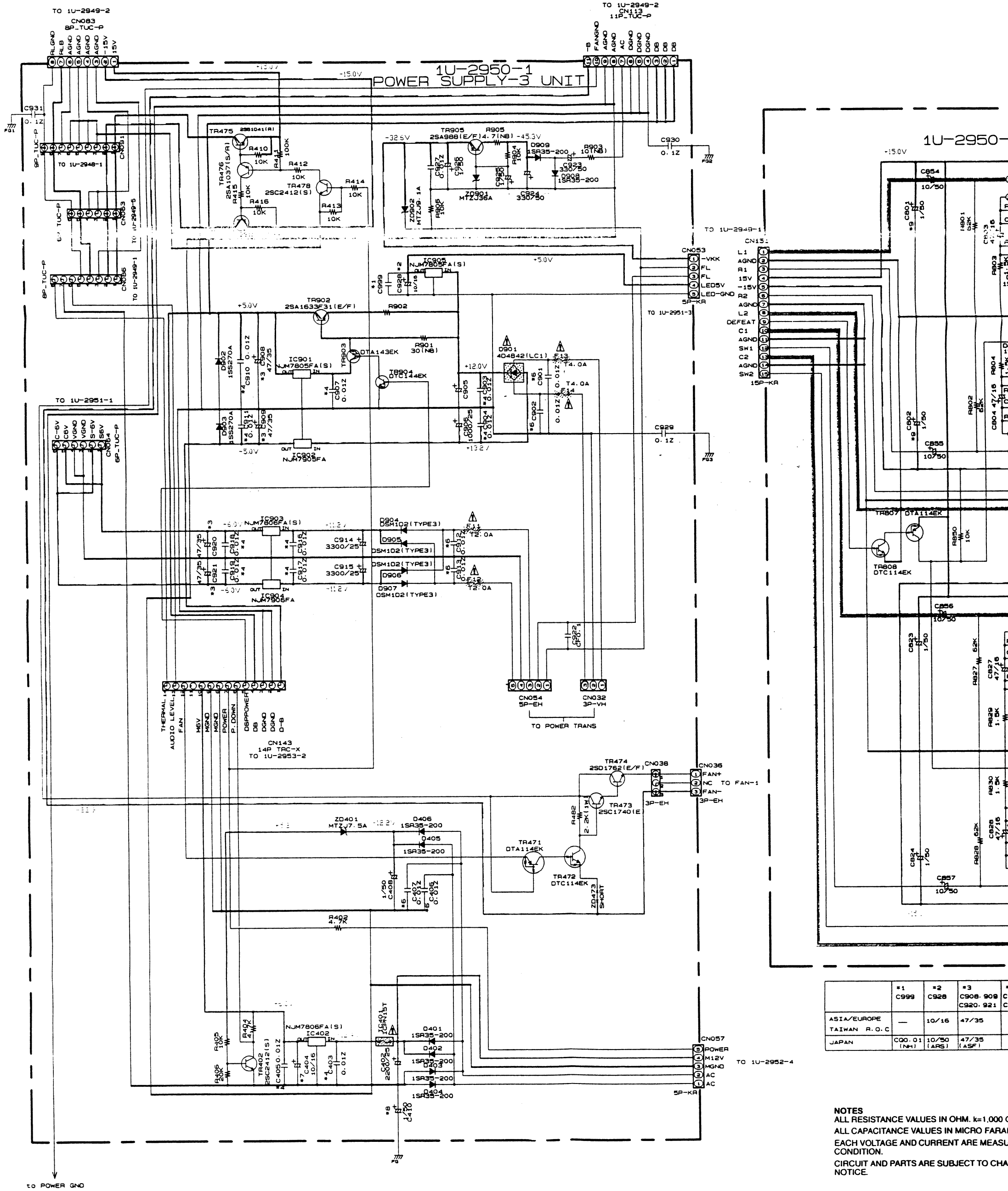

	*1 C999	*2 C928	*3 C908. 909 C920. 921	*4 C4 C9
ASIA/EUROPE TAIWAN R.O.C	—	10/16	47/35	
JAPAN	CQ0.01 (NH)	10/50 (ARS)	47/35 (ASF)	

NOTES

ALL RESISTANCE VALUES IN OHM. k=1,000 O

ALL CAPACITANCE VALUES IN MICRO FARAD

EACH VOLTAGE AND CURRENT ARE MEASUR CONDITION.

CIRCUIT AND PARTS ARE SUBJECT TO CHAN NOTICE.

6 7 8 9 10 11

A B C D E F G H

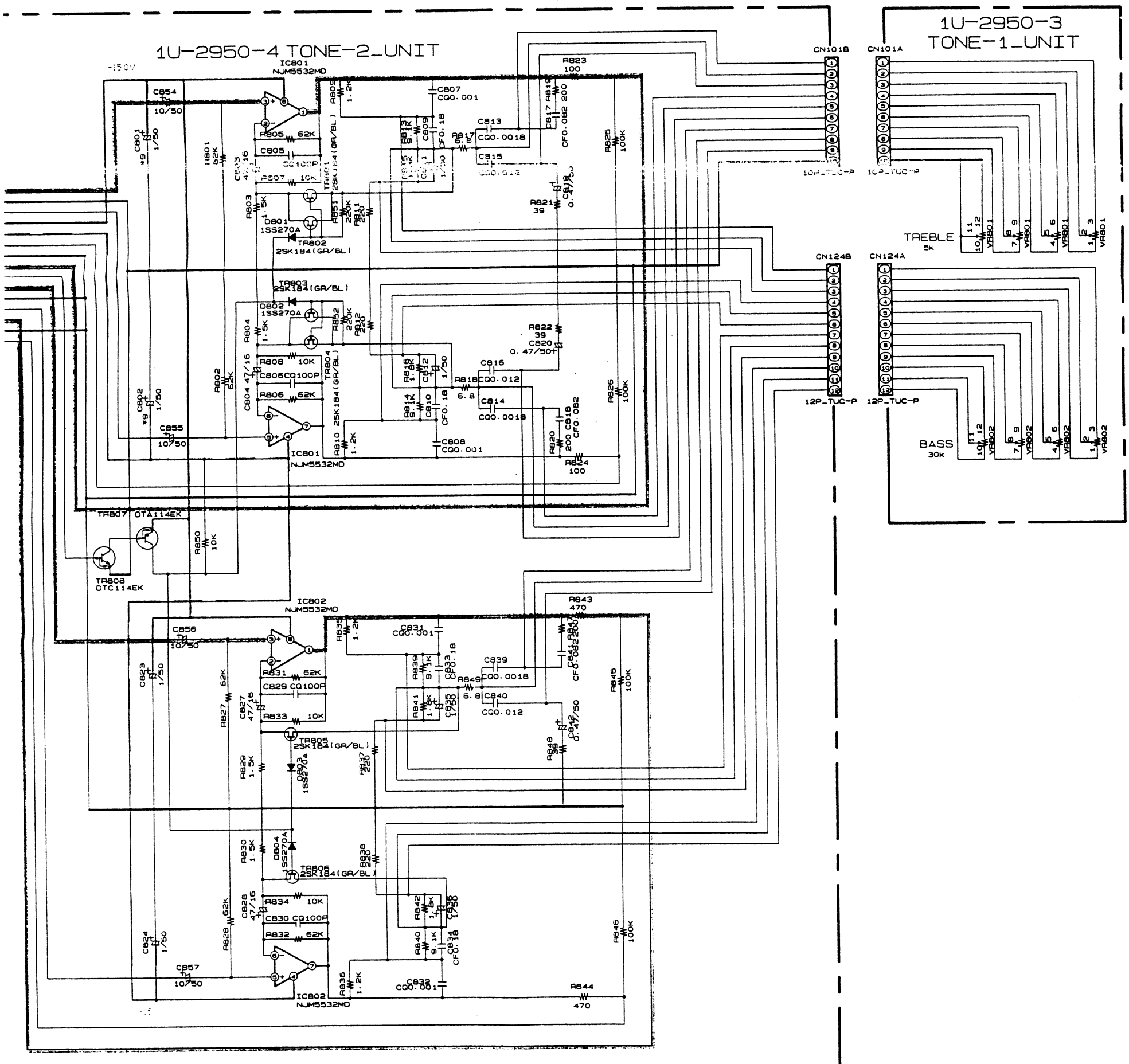

	*1 C999	*2 C928	*3 C908. 909 C920. 921	*4 C403. 405. 903. 904. 907 C910. 911. 916~918. 921	*5 C914. 915	*6 C406. 407. 901 C902. 912. 913	*7 C404	*8 C410	*9 C801. 802	*10 C854~856
ASIA/EUROPE TAIWAN R.O.C	—	10/16	47/35	0.01Z	3300/25	0.01Z	10/16	1/50	1/50	10/50
JAPAN	CQ0.01 (NH)	10/50 (ARS)	47/35 (ASF)	—	3300/25 (ASF)	CQ0.01 (NH)	10/50 (ASF)	1/50 (ASF)	1/50 (ASF)	10/50 (ASF)

+B LINE
−B LINE
SIGNAL LINE

NOTES
ALL RESISTANCE VALUES IN OHM. k=1,000 OHM, M=1,000,000 OHM
ALL CAPACITANCE VALUES IN MICRO FARAD. P=MICRO-MICRO FARAD
EACH VOLTAGE AND CURRENT ARE MEASURED AT NO SIGNAL INPUT CONDITION.
CIRCUIT AND PARTS ARE SUBJECT TO CHANGE WITHOUT PRIOR NOTICE.

WARNING:
Parts marked with this symbol ⚠ have critical characteristics.
Use ONLY replacement parts recommended by the manufacturer.

CAUTION:
Before returning the unit to the customer, make sure you make either (1) a leakage current check or (2) a line to chassis resistance check. If the leakage current exceeds 0.5 milliamps, or if the resistance from chassis to either side of the power cord is less than 240 kohms, the unit is defective.

WARNING:
DO NOT return the unit to the customer until the problem is located and corrected.

SCHEMATIC DIAGRAM (6/16)

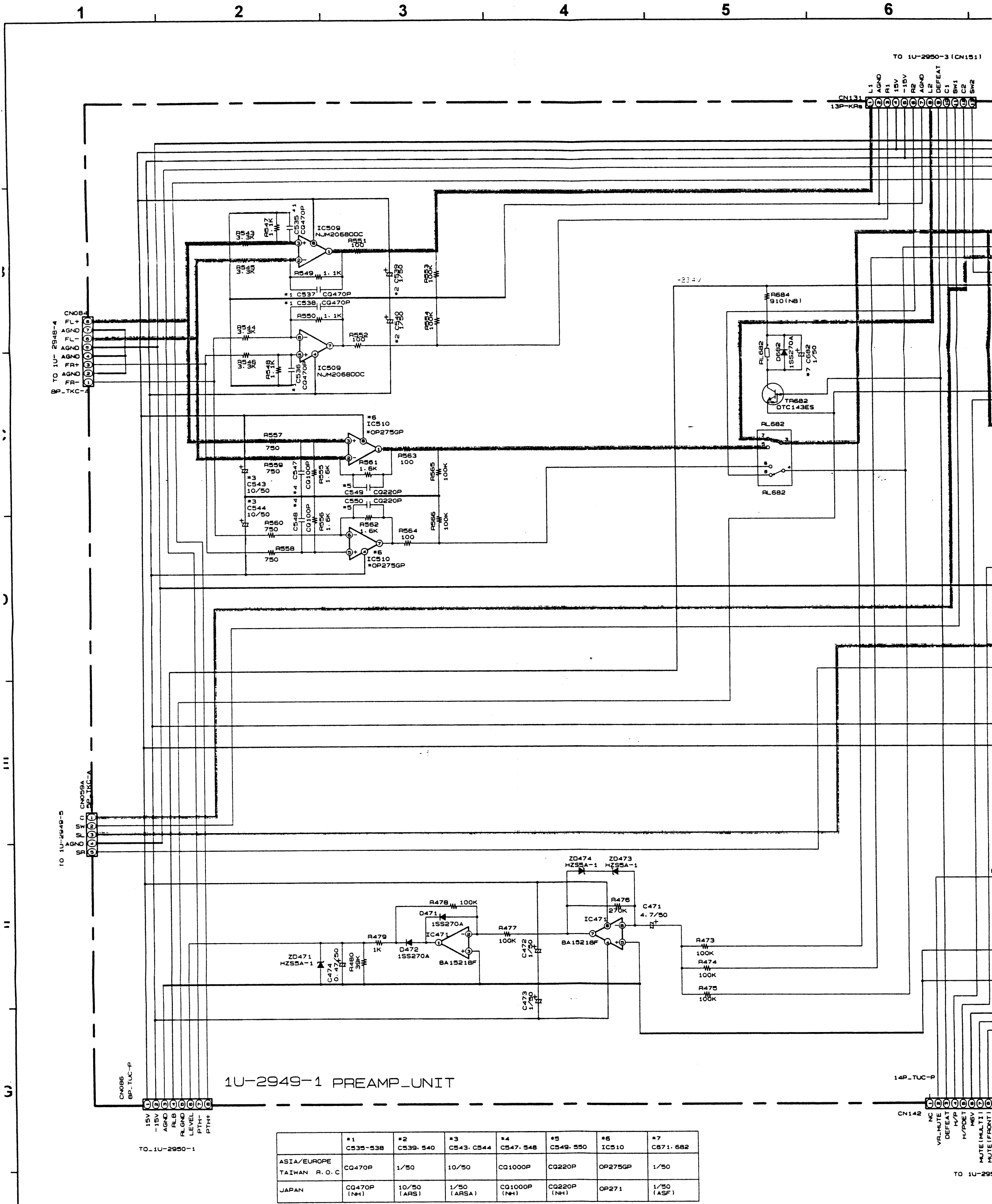

	*1 C535-538	*2 C539, 540	*3 C543, C544	*4 C547, 548	*5 C549, 550	*6 IC510	*7 C671, 682
ASIA/EUROPE TAIWAN R.O.C	CQ470P	1/50	10/50	CQ1000P	CQ220P	OP275GP	1/50
JAPAN	CQ470P (NH)	10/50 (ARS)	1/50 (ARSA)	CQ1000P (NH)	CQ220P (NH)	OP271	1/50 (ASF)

NOTES
ALL RESISTANCE VALUES IN O
ALL CAPACITANCE VALUES IN
EACH VOLTAGE AND CURREN
CONDITION.
CIRCUIT AND PARTS ARE SUB
NOTICE.

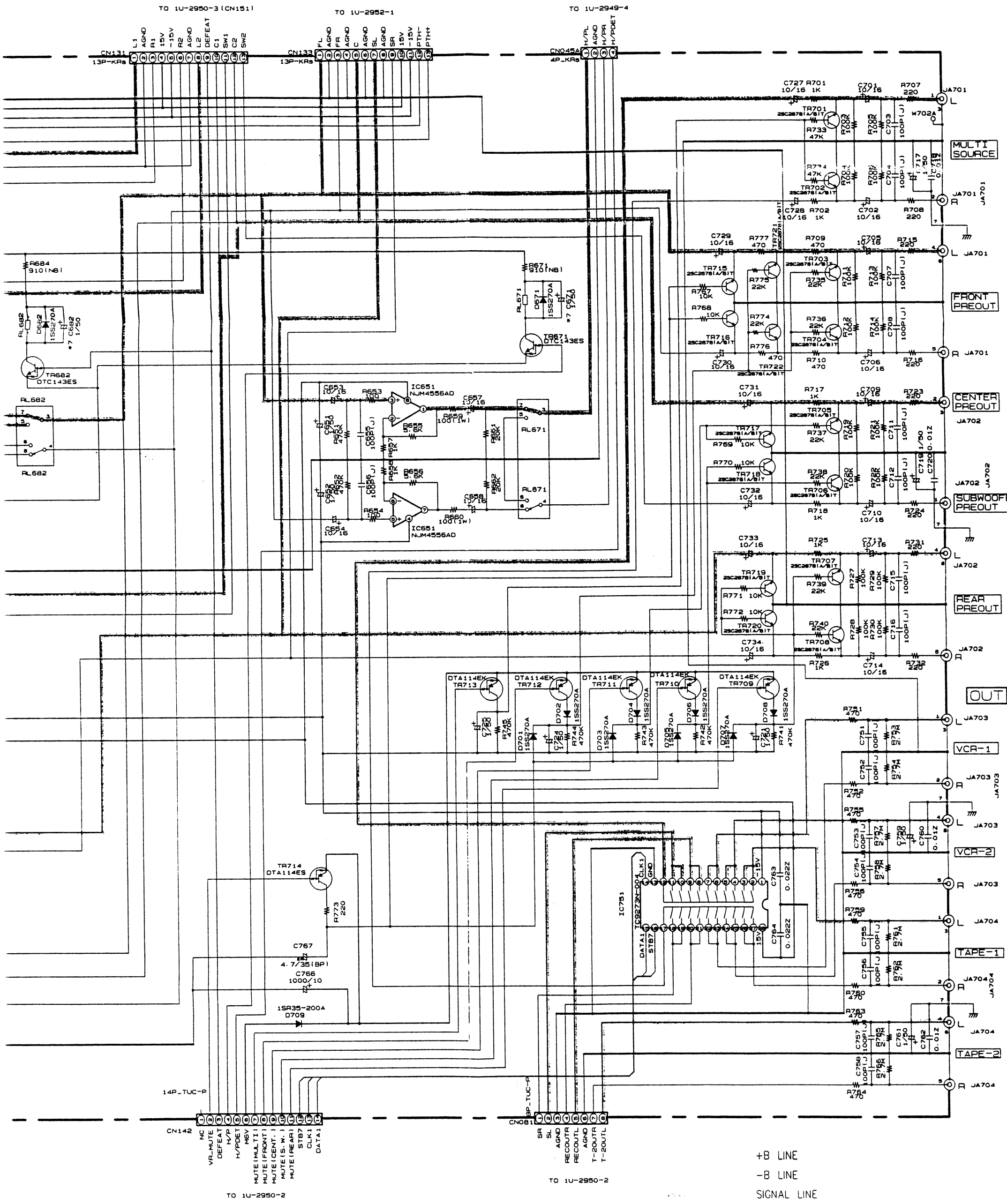

NOTES

ALL RESISTANCE VALUES IN OHM. k=1,000 OHM, M=1,000,000 OHM

ALL CAPACITANCE VALUES IN MICRO FARAD. P=MICRO-MICRO FARAD

EACH VOLTAGE AND CURRENT ARE MEASURED AT NO SIGNAL INPUT CONDITION.

CIRCUIT AND PARTS ARE SUBJECT TO CHANGE WITHOUT PRIOR NOTICE.

WARNING:

Parts marked with this symbol ⚠ ▩ have critical characteristics.
Use ONLY replacement parts recommended by the manufacturer.

CAUTION:

Before returning the unit to the customer, make sure you make either (1) a leakage current check or (2) a line to chassis resistance check. If the leakage current exceeds 0.5 milliamps, or if the resistance from chassis to either side of the power cord is less than 240 kohms, the unit is defective.

WARNING:

DO NOT return the unit to the customer until the problem is located and corrected.

SCHEMATIC DIAGRAM (7/16) (8/16)

1 2 3 4 5 6

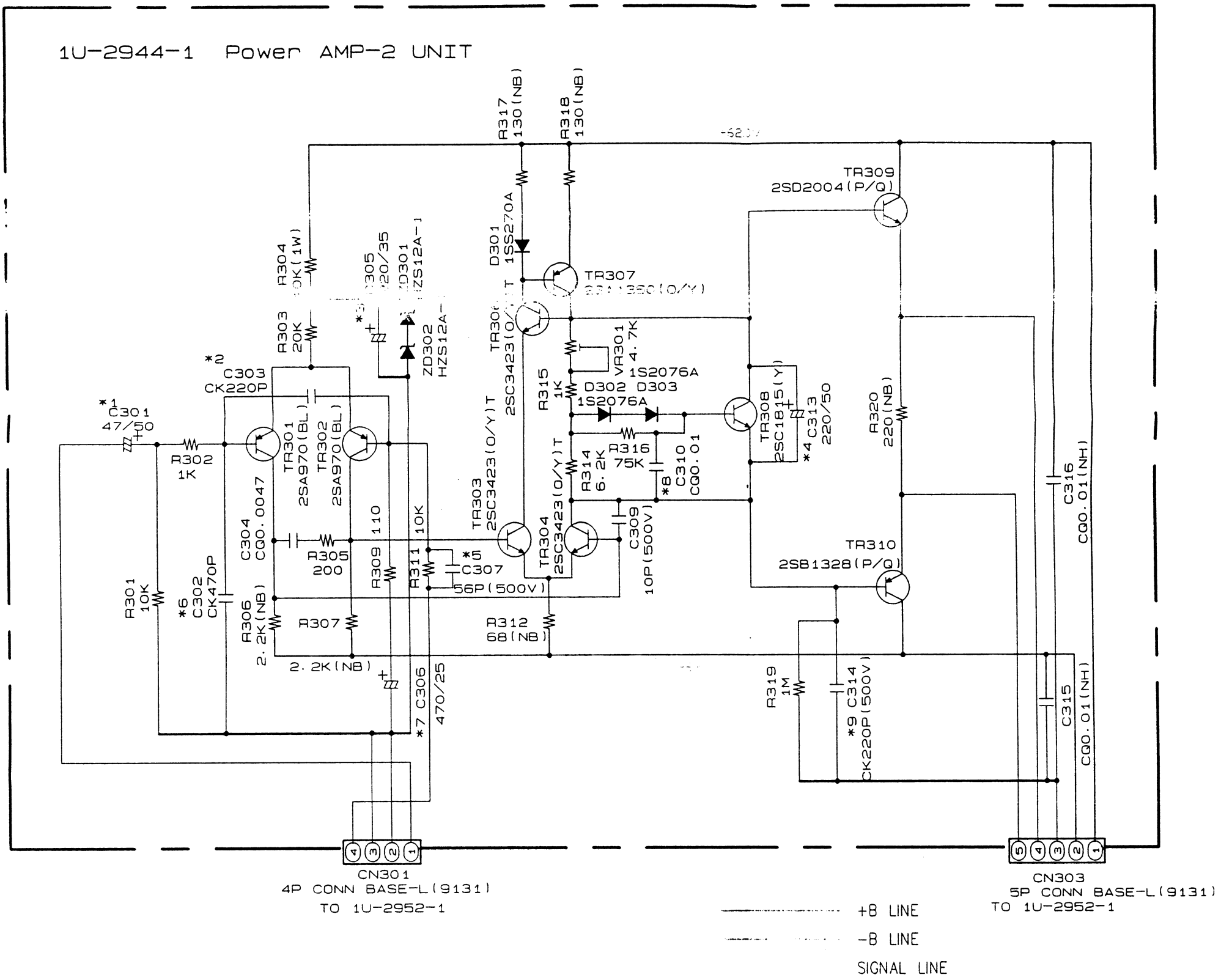

	*1 C301	*2 C303	*3 C305	*4 C313	*5 C307	*6 C302	*7 C306	*8 C310	*9 C314
ASIA/EUROPE TAIWAN R.O.C	47/50	CK220P	220/35	220/50	56P(500V)	CK470P	470/25	CQ0.01	220P(500V)
JAPAN	47/50 (ASF)	CQ220P (NH)	220/50 (ASF)	220/50 (ASF)	CQ56P (NH)	CQ470P (NH)	470/25 (ASF)	CQ0.01 (NH)	CQ220P (NH)

NOTES

ALL RESISTANCE VALUES IN OHM. k=1,000 OHM, M=1,000,000 OHM

ALL CAPACITANCE VALUES IN MICRO FARAD. P=MICRO-MICRO FARAD

EACH VOLTAGE AND CURRENT ARE MEASURED AT NO SIGNAL INPUT CONDITION.

CIRCUIT AND PARTS ARE SUBJECT TO CHANGE WITHOUT PRIOR NOTICE.

WARNING:
Parts marked with this symbol ⚠ ▒▒ have critical characteristics.
Use ONLY replacement parts recommended by the manufacturer.

CAUTION:
Before returning the unit to the customer, make sure you make either (1) a leakage current check or (2) a line to chassis resistance check. If the leakage current exceeds 0.5 milliamps, or if the resistance from chassis to either side of the power cord is less than 240 kohms, the unit is defective.

WARNING:
DO NOT return the unit to the customer until the problem is located and corrected.

TO 1U-2950-1 P. SUPPLY-4 UNIT CN057

CNO
POWE
M12
MGN
A
A
5P-

	*1 F1	*2 F2	*3 F3
ASIA	630mA/250V 2061036008	JW	6.3A/2 206101
EUROPE	630mA/250V 2061036008	JW	6.3A/2 206101
TAIWAN R.O.C	2A/125V 2061039063	15A/125V 2061051012	JW
JAPAN	2A/125V 2061035041	15A/125V 2061017030	JW

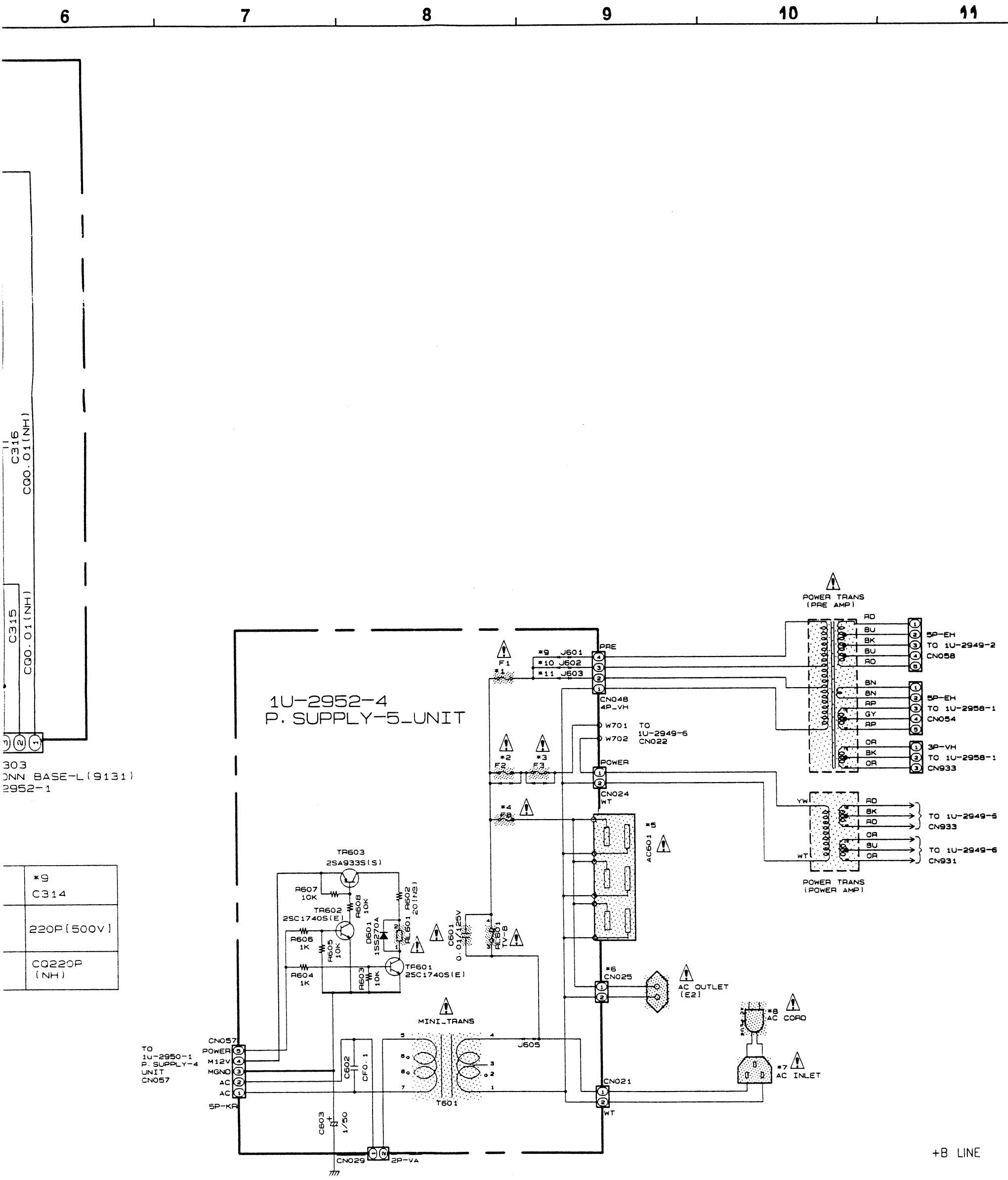

	*9 C314
	220P(500V)
	CQ220P (NH)

*1 F1	*2 F2	*3 F3	*4 F8	*5 AC601	*6 CN025	*7 AC INLET	*8 AC CORD	*9 J601	*10 J602	*11 J603
)mA/250V 51036008	JW	6.3A/250V 2061015061	2.5A/250V 2061015032	——	2P VH	2P 2033970008	2062154002 2062148005	JW	——	——
)mA/250V 51036008	JW	6.3A/250V 2061015061	2.5A/250V 2061015032	——	2P VH	2P 2033970008	2062154002	JW	——	——
/125V 51039063	15A/125V 2061051012	JW	8A/125V 2061046014	3P AC OUTLET	——	3P 2033962003	2062150103	——	JW	——
/125V 51035041	15A/125V 2061017030	JW	8A/125V 2061052008	3P AC OUTLET	——	3P 2033962003	2062150103	——	——	JW

SCHEMATIC DIAGRAM (9/16)

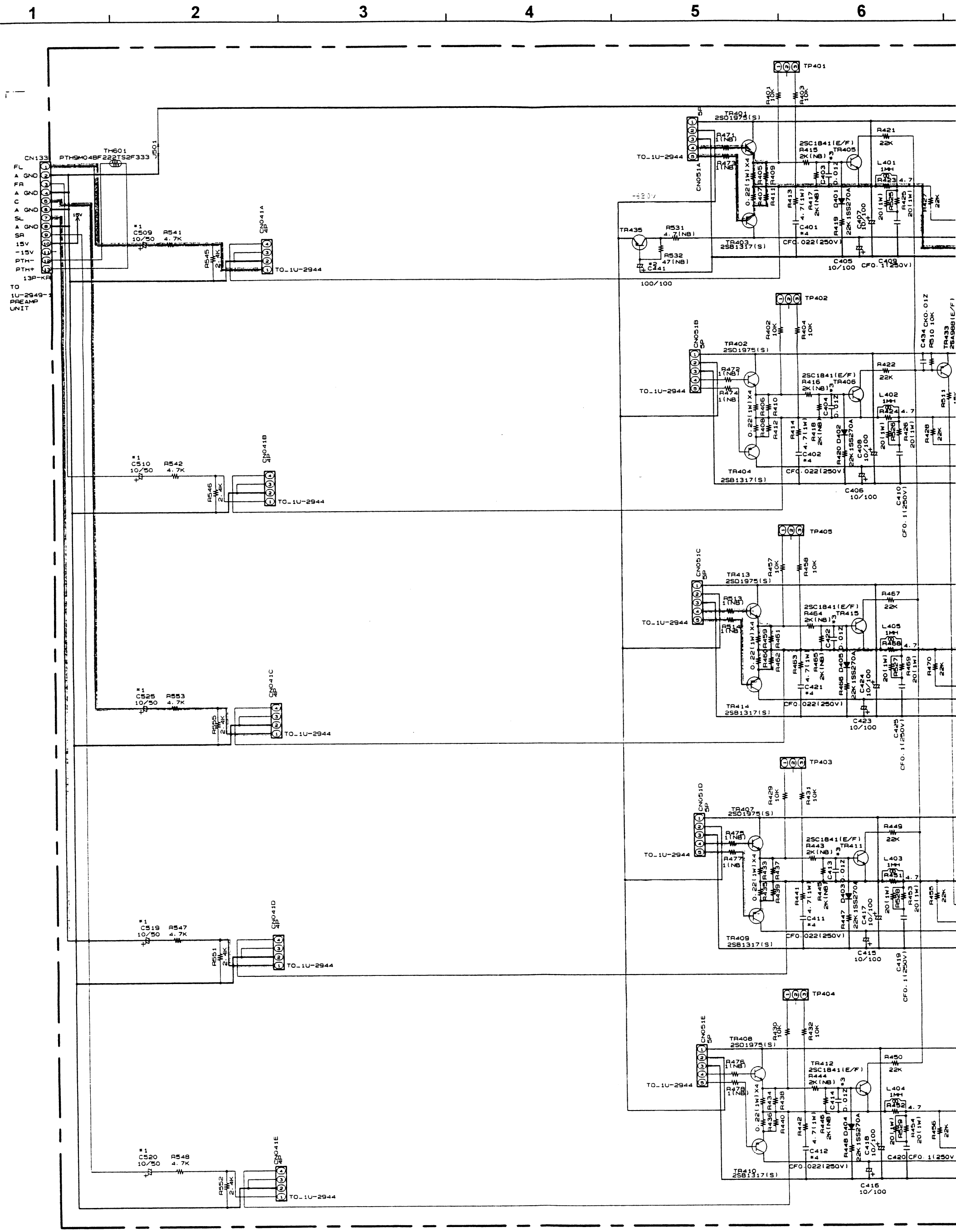

1U-2952-1 POWERAMP UNIT

1U-2952-2 POWER SUPPLY-1

SP TERMINAL UNIT 1U-2952-3

	※1 C461・C464 C466・C468	※2	※3 C403・404 C413・414 C422	※4 C401・402 C411・412 C421
ASIA /EUROPE TAIWAN R.O.C	CK0.01			
TAIWAN R.O.C JAPAN	CQ0.01			

	※1 C509・510 C519・520 C525	※2 C441	※3 C403・404 C413・414 C422	※4 C401・402 C411・412 C421
ASIA /EUROPE TAIWAN R.O.C	10/50	100/100	0.01Z	CF0.022
JAPAN	10/50 (ASF)	100/100 (ARE)	CQ0.01 (NH)	CQ0.022 (NH)

	※5 C429・431	※6 C433・522
ASIA /EUROPE TAIWAN R.O.C	47/16	330/6.3
JAPAN	47/50 (ASF)	330/6.3 (ASF)

+B LINE

-B LINE

SIGNAL LINE

NOTES

ALL RESISTANCE VALUES IN OHM k=1,000 OHM, M=1,000,000 OHM

ALL CAPACITANCE VALUES IN MICRO FARAD P=MICRO-MICRO FARAD

EACH VOLTAGE AND CURRENT ARE MEASURED AT NO SIGNAL INPUT CONDITION.

CIRCUIT AND PARTS ARE SUBJECT TO CHANGE WITHOUT PRIOR NOTICE.

WARNING:
Parts marked with this symbol ⚠ ▨ have critical characteristics.
Use ONLY replacement parts recommended by the manufacturer.

CAUTION:
Before returning the unit to the customer, make sure you make either (1) a leakage current check or (2) a line to chassis resistance check. If the leakage current exceeds 0.5 milliamps, or if the resistance from chassis to either side of the power cord is less than 240 konms, the unit is defective.

WARNING:
DO NOT return the unit to the customer until the problem is located and corrected.

SCHEMATIC DIAGRAM (10/16)

1 2 3 4 5 6

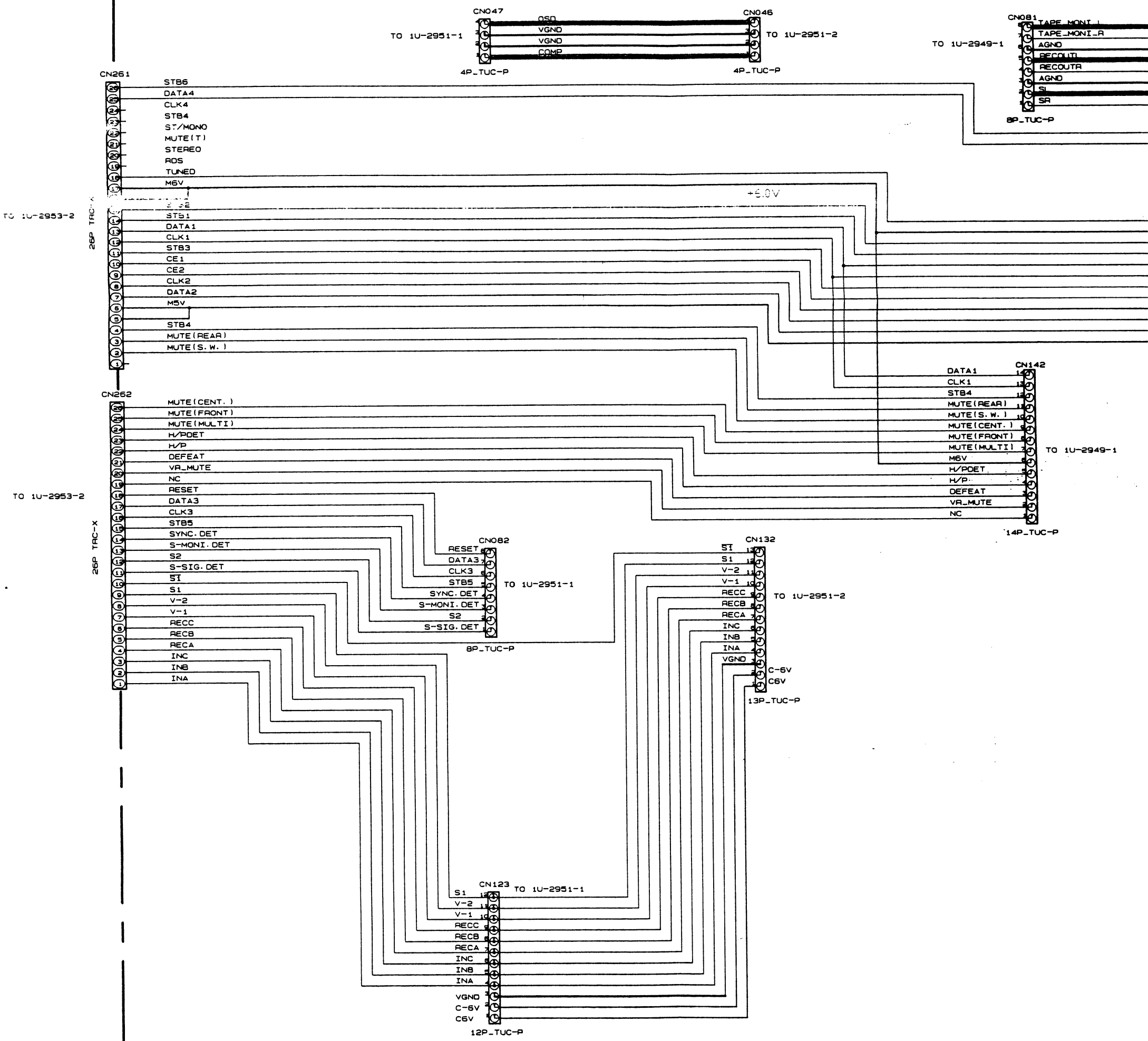

NOTES

ALL RESISTANCE VALUES IN OHM. k=1,000 OHM, M=1,000,000 OHM

ALL CAPACITANCE VALUES IN MICRO FARAD. P=MICRO-MICRO FARAD

EACH VOLTAGE AND CURRENT ARE MEASURED AT NO SIGNAL INPUT CONDITION.

CIRCUIT AND PARTS ARE SUBJECT TO CHANGE WITHOUT PRIOR NOTICE.

WARNING:
Parts marked with this symbol ⚠ [redacted] have critical character
Use ONLY replacement parts recommended by the manufactur

CAUTION:
Before returning the unit to the customer, make sure you make
leakage current check or (2) a line to chassis resistance check.
current exceeds 0.5 milliamps, or if the resistance from chassis
of the power cord is less than 240 kohms, the unit is defective.

WARNING:
DO NOT return the unit to the customer until the problem is loca
corrected.

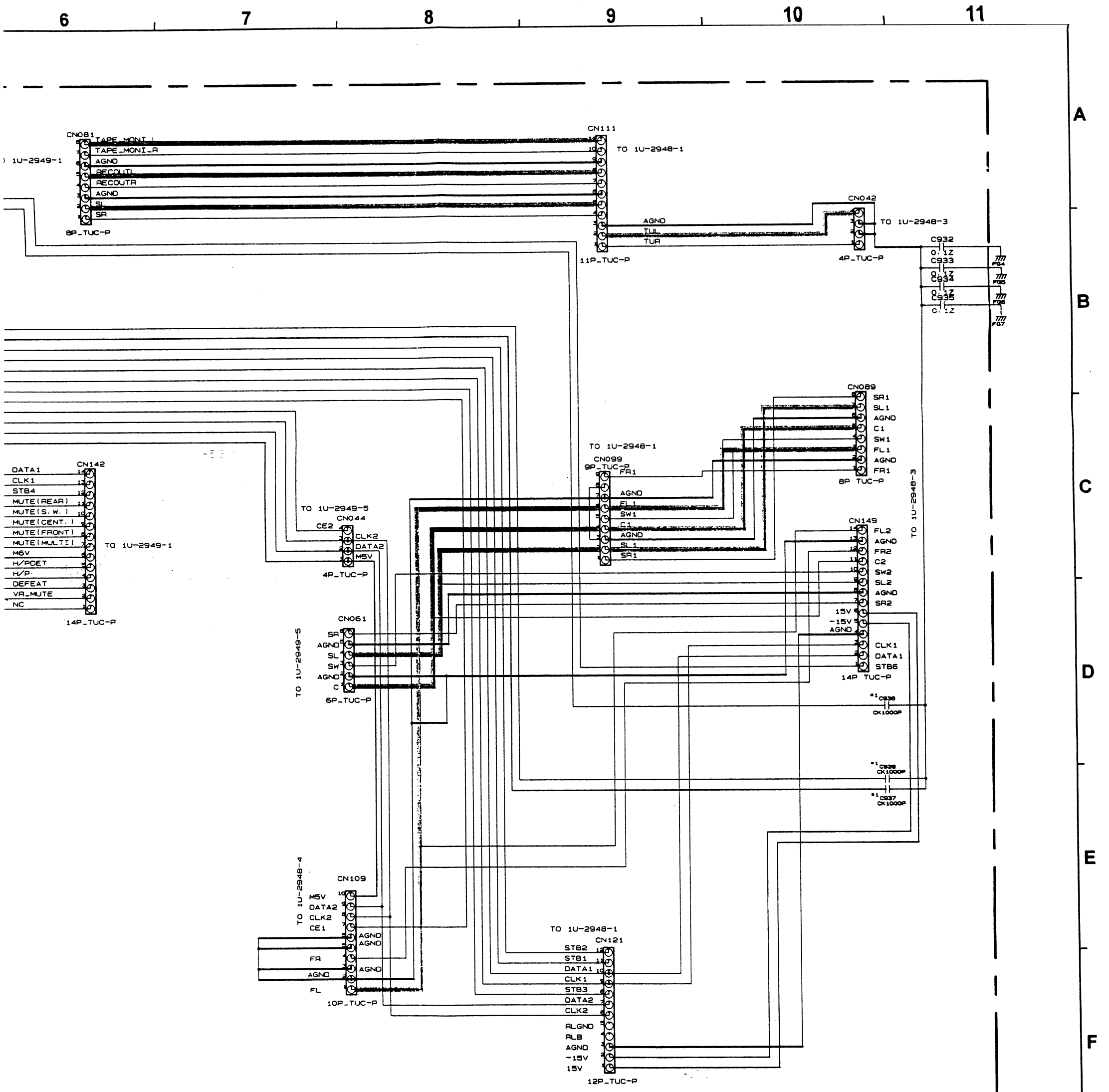

with this symbol ⚠ ▒▒ have critical characteristics.
placement parts recommended by the manufacturer.

ng the unit to the customer, make sure you make either (1) a
nt check or (2) a line to chassis resistance check. If the leakage
ds 0.5 milliamps, or if the resistance from chassis to either side
cord is less than 240 kohms, the unit is defective.

n the unit to the customer until the problem is located and

	*1 C936. 937. 939
ASIA/EUROPE TAIWAN R.O.C	1000P
JAPAN	—

+B LINE

-B LINE

SIGNAL LINE

SCHEMATIC DIAGRAM (11/16)

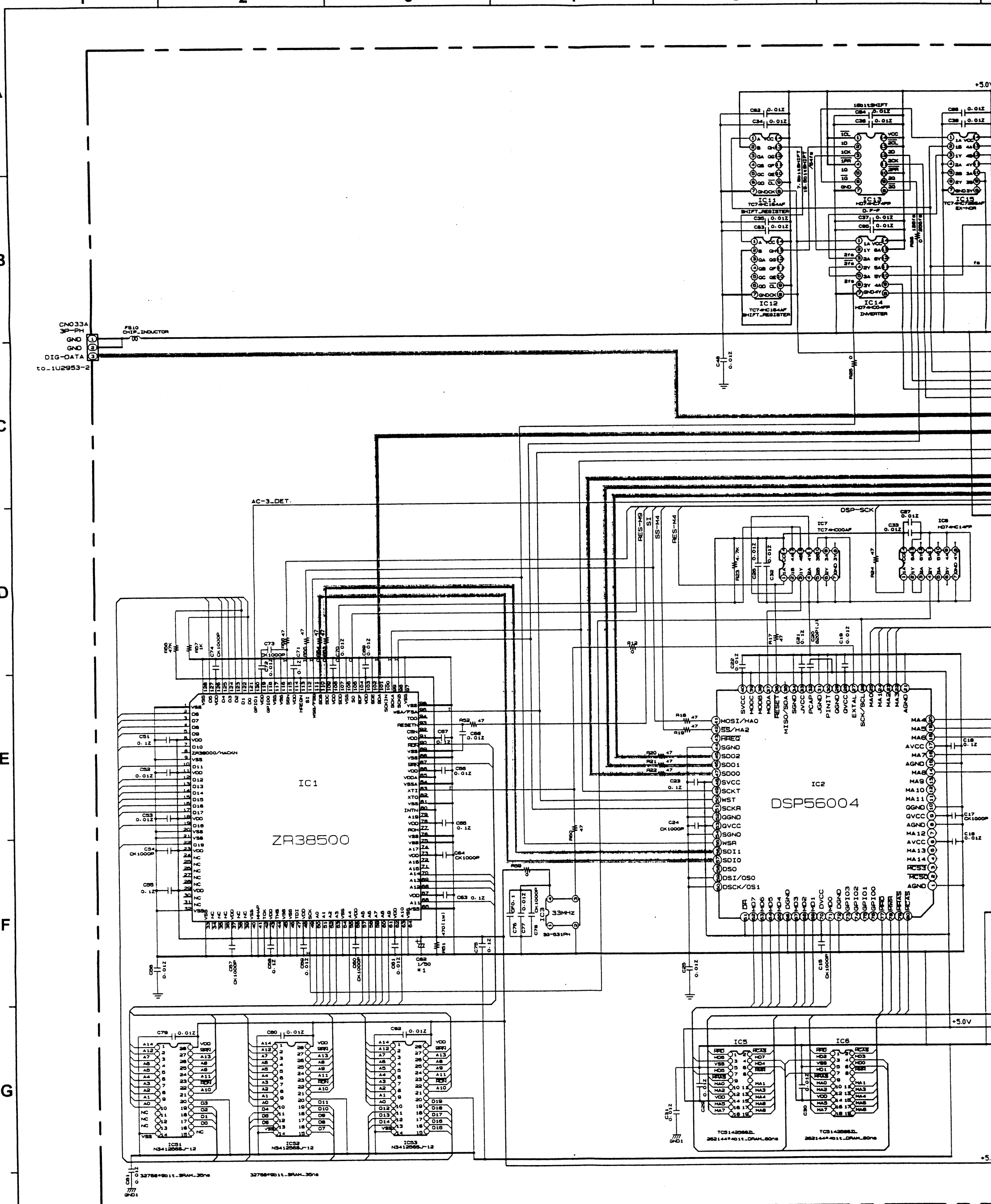

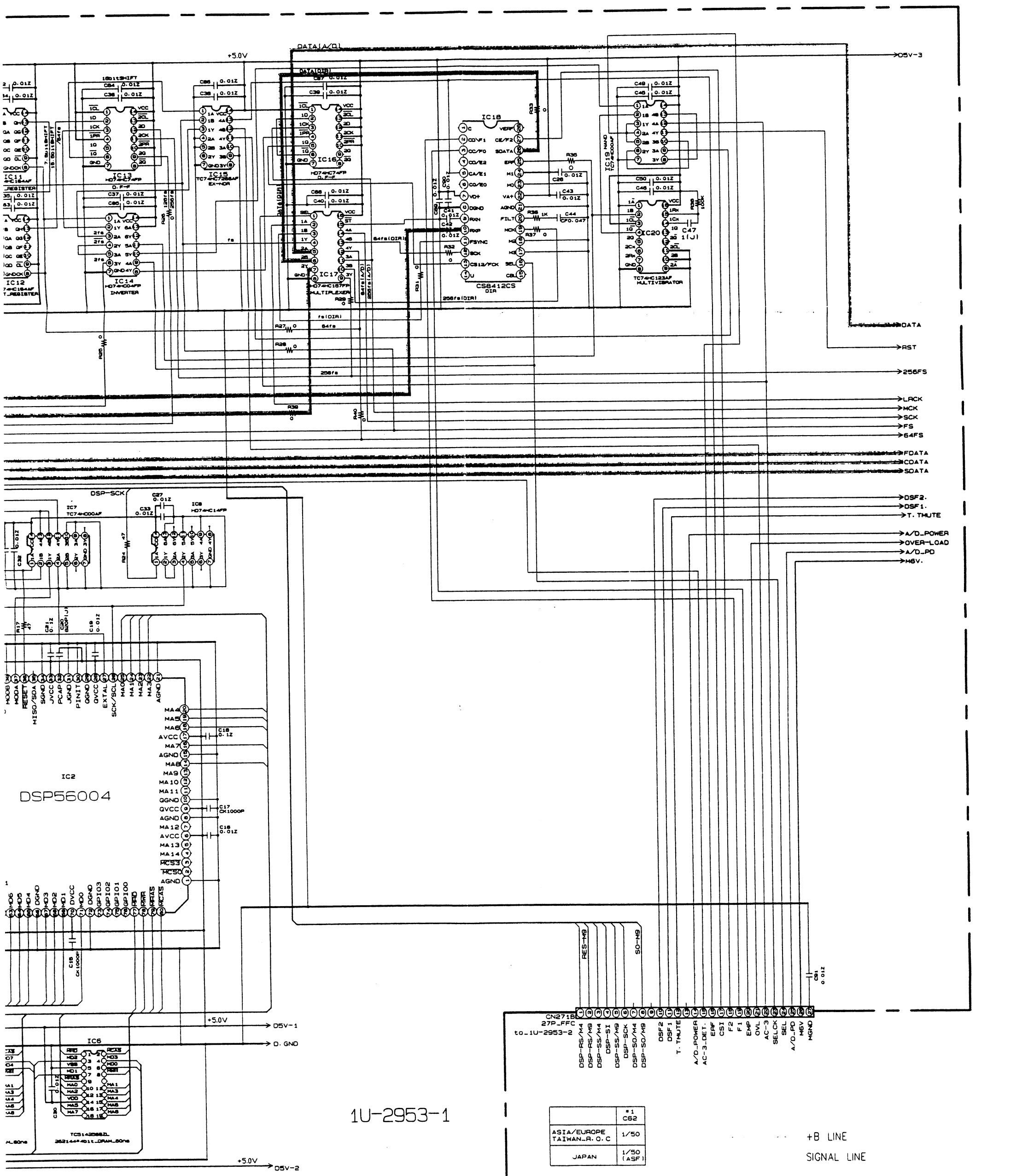

	*1 C62
ASIA/EUROPE TAIWAN_R.O.C	1/50
JAPAN	1/50 (ASF)

+B LINE

SIGNAL LINE

NOTES

ALL RESISTANCE VALUES IN OHM. k=1,000 OHM, M=1,000,000 OHM

ALL CAPACITANCE VALUES IN MICRO FARAD. P=MICRO-MICRO FARAD

EACH VOLTAGE AND CURRENT ARE MEASURED AT NO SIGNAL INPUT CONDITION.

CIRCUIT AND PARTS ARE SUBJECT TO CHANGE WITHOUT PRIOR NOTICE.

WARNING:
Parts marked with this symbol ⚠ [redacted] have critical characteristics.
Use ONLY replacement parts recommended by the manufacturer.

CAUTION:
Before returning the unit to the customer, make sure you make either (1) a leakage current check or (2) a line to chassis resistance check. If the leakage current exceeds 0.5 milliamps, or if the resistance from chassis to either side of the power cord is less than 240 kohms, the unit is defective.

WARNING:
DO NOT return the unit to the customer until the problem is located and corrected.

SCHEMATIC DIAGRAM (12/16)

2 3 4 5 6 7

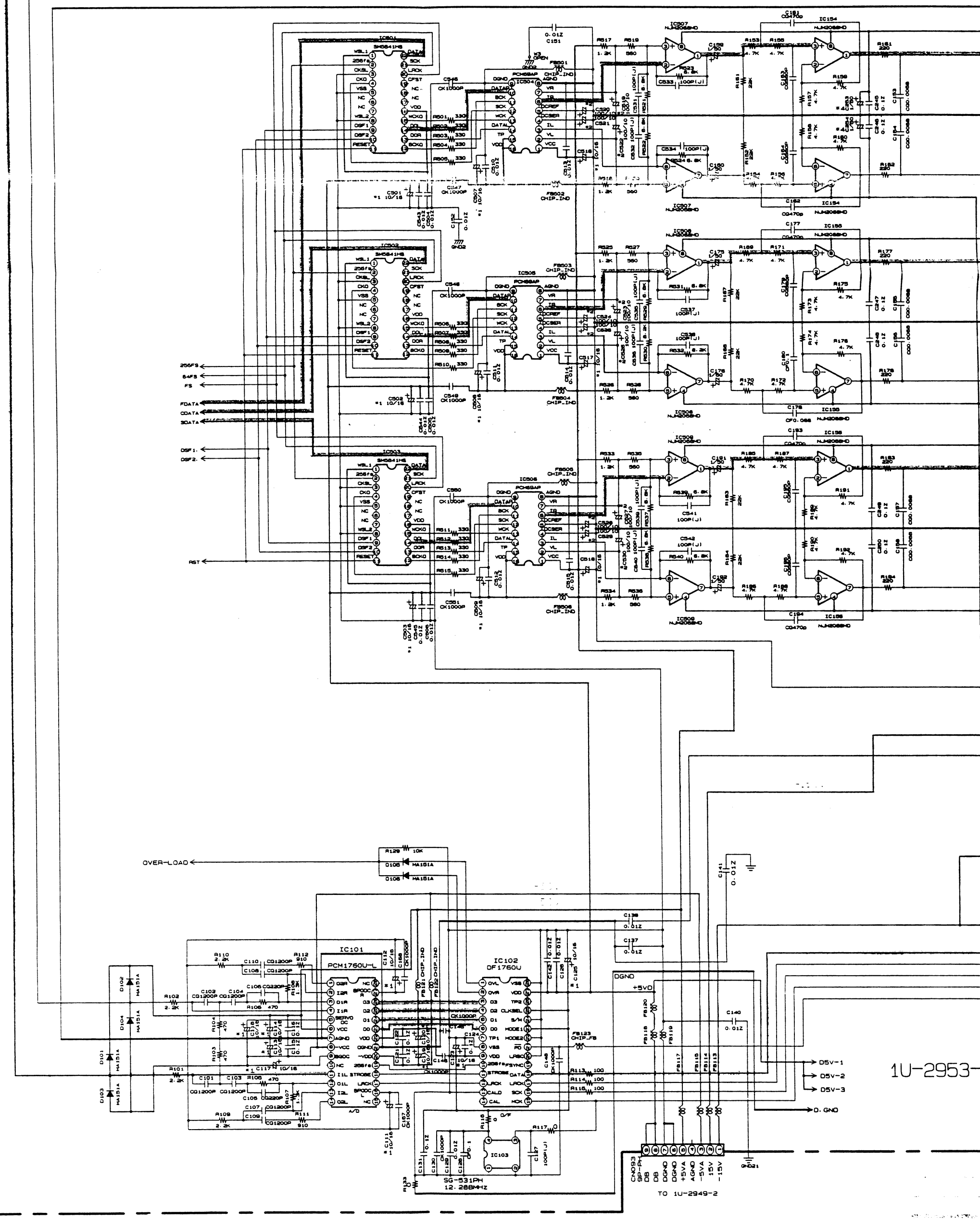

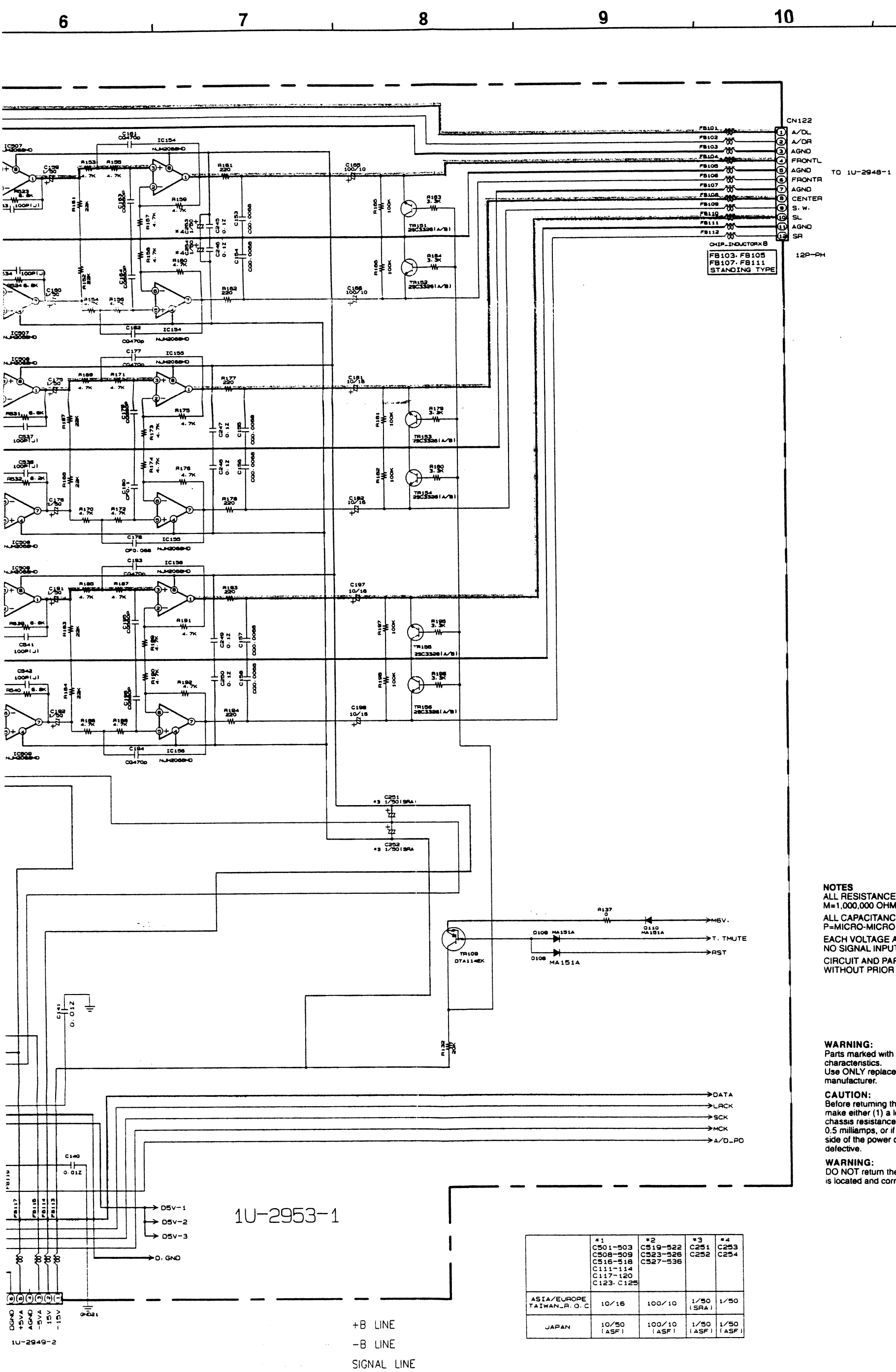

	*1 C501-503 C508-509 C516-518 C111-114 C117-120 C123. C125	*2 C519-522 C523-526 C527-536	*3 C251 C252	*4 C253 C254
ASIA/EUROPE TAIWAN_R. O. C	10/16	100/10	1/50 (SRA)	1/50
JAPAN	10/50 (ASF)	100/10 (ASF)	1/50 (ASF)	1/50 (ASF)

+B LINE

-B LINE

SIGNAL LINE

NOTES

ALL RESISTANCE VALUES IN OHM. k=1,000 OHM, M=1,000,000 OHM

ALL CAPACITANCE VALUES IN MICRO FARAD. P=MICRO-MICRO FARAD

EACH VOLTAGE AND CURRENT ARE MEASURED AT NO SIGNAL INPUT CONDITION.

CIRCUIT AND PARTS ARE SUBJECT TO CHANGE WITHOUT PRIOR NOTICE.

WARNING:
Parts marked with this symbol ⚠ ▓▓ have critical characteristics.
Use ONLY replacement parts recommended by the manufacturer.

CAUTION:
Before returning the unit to the customer, make sure you make either (1) a leakage current check or (2) a line to chassis resistance check. If the leakage current exceeds 0.5 milliamps, or if the resistance from chassis to either side of the power cord is less than 240 kohms, the unit is defective.

WARNING:
DO NOT return the unit to the customer until the problem is located and corrected.

SCHEMATIC DIAGRAM (13/16)

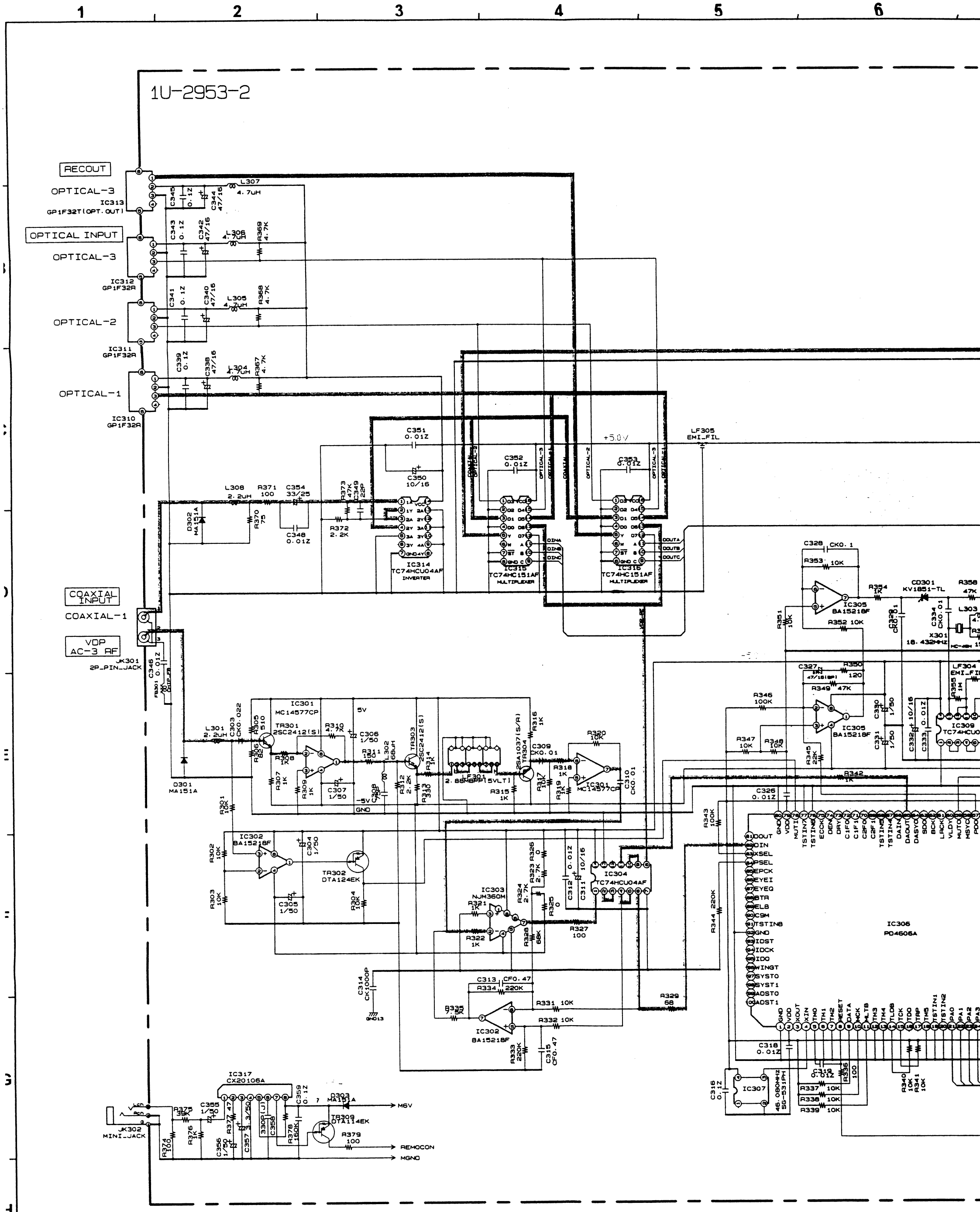

6 7 8 9 10 11

CN033B
3P-PH
3 DIG-DATA
2 GND
1 GND
to_1U-2953-1

+5.0V

DB
DINA → DINA
DINB → DINB
DINC → DINC
DOUTA → DOUTA
DOUTB → DOUTB
DOUTC → DOUTC
AC-3_RFDET.

C328 CK0.1
R353 10K
R354 1K
CD301 KV1851-TL
R358 47K
C335 100/10
R351 10K
R352 10K
C329 CK0.01
C334 CK0.01
L303 4.7U
X301 18.432MHz HC-49H
R357 150K
C336 15P
R359 47K
IC305 BA15218F

TR305 2SB1041(R)
R362 10K
R363 100K
R364 10K
TR306 2SA1037(S/R)
TR308 2SC2412(S)
R366 10K
→DEMOD-POWER
R361 4.7K
R360 10K
TR307 2SD1292(R)
R365 10K

C327 47P/18(6P)
R350 120
R349 47K
LF304 EMI_FIL
R355 1M
R356 470
R346 100K
C330 1/50
C331 1/50
C332 10/16
C333 0.01Z
IC309 TC74HCU04AF
IC305 BA15218F
R347 10K
R348 10K
R345 22K
LF302 EMI_FIL
R342 1K
→D-B
C326 0.01Z
C325 0.01Z

IC306 PD4606A
GND VDD MUTI TSTIN7 TSTIN6 ECKI DEN DRY C1FO C1F1 C2FO C2F1 TSTIN5 TSTIN4 DAIN DAOUT DASYO SDO BCK LRCK VLDY MUTO MSYO POO TSTIN3 VI VO GND VDD DB9
DOUT DIN XSEL PSEL EPCK EYEI EYEQ BTR EL8 CSM TSTIN8 GND IDST IDCK IDO WINGT SYSTO SYST1 ADSTO ADST1
DB15 DB14 DB13 DB12 DB11 DB10 DB9 DB8
PA10 OE GND PA11 PA9 PA8 PA13 WE PA14 PA12 GND PA7
GND VDD XOUT XIN TM0 TM1 TM2 RESET DATA MCK MLTB TM3 TM4 TLDB TCK TDO TRP TM5 TSTIN1 TSTIN2 PA0 PA1 PA2 PA3 VDD PA4 PA5 GND VDD PA6

LF303 EMI_FIL
→DGND
→DEMOD-RES

C323 10/16
C324 0.01Z
C360 0.01Z
IC308 MCM62050DJ15
VCC PA14 CE2 WE PA13 PA9 PA10 PA11 OE PA12 CE1 DB9 DB8 DB7 DB6 DB5
NC NC PA8 PA7 PA6 PA5 PA4 PA3 PA2 PA1 PA0 DB1 DB2 DB3 DB4 GND

C318 0.01Z
C319 0.01Z
R336 100
R337 10K
R338 10K
R339 10K
R340 10K
R341 10K
C320 0.01Z
C321 0.01Z
C322 10/16
IC307
46.080MHz SG-531PH

NOTES
ALL RESISTANCE VALUES IN OHM. k=1,000 OHM. M=1,000,000 OHM

ALL CAPACITANCE VALUES IN MICRO FARAD. P=MICRO-MICRO FARAD

EACH VOLTAGE AND CURRENT ARE MEASURED AT NO SIGNAL INPUT CONDITION.

CIRCUIT AND PARTS ARE SUBJECT TO CHANGE WITHOUT PRIOR NOTICE.

WARNING:
Parts marked with this symbol ⚠ have critical characteristics.
Use ONLY replacement parts recommended by the manufacturer.

CAUTION:
Before returning the unit to the customer, make sure you make either (1) a leakage current check or (2) a line to chassis resistance check. If the leakage current exceeds 0.5 milliamps, or if the resistance from chassis to either side of the power cord is less than 240 kohms, the unit is defective.

WARNING:
DO NOT return the unit to the customer until the problem is located and corrected.

+B LINE
-B LINE
SIGNAL LINE

SCHEMATIC DIAGRAM (14/16)

1 2 3 4 5 6

to_1U-2951-3

CN291 29P_FFC

M5V MGND STANDBY REMOCON K1 K2 K3 K4 K5 VSELA VSELB FL-CK FL-DATA FL-RS G0 G1 G2 a b c d e f g LED-OE LED-LE LED-SD LED-CK NC

REMOCON ← REMOCON
M6V ←
MGND ←
[to_2/4]

4.7K R482 R483 R484 R485 R486

AC-3_RFDET

CN072 7P-KR

PROTECT
LIMIT
RL-FRONT
RL-CENT.
RL-REAR
BTL

VOL-MUTE
TR405 DTC144EK

CN261 26P_(TRC-X)

ST86 DATA4 CLK4 ST84 ST/MONO MUTE-T STEREO RDS TUNED M6V ST82 ST81 DATA1 CLK1 ST83 CE1 CE2 CLK2 DATA2 M5V ST87 MUTE-REAR MUTE-S.W.

S-MONI.DET
S-SIG.DET
SYNC.DET
H/PDET

CN262 26P_(TRC-X)

MUTE-CENT. MUTE-FRONT MUTE-MULTI H/PDET H/P DEFEAT VR MUTE NC RESET DATA3 CLK3 ST85 SYNC.DET S-MONI.DET S2 S-SIG.DET ST S1 V-2 V-1 RECC RECB RECA INC INB INA

CN143 14P_(TRC-X)

THERMAL
AUDIO_LEVEL
FAN
FANOFF
M6V
MGND
MGND
POWER
P-DOWN
DSP-POWER
DB
DGND
DGND
D-B
BDOWN

FB401 FB402

C476 C477 C478 C472 0.012

C479 1000P(J) DGND MGND

DSF2

EAF CSI F2 F1 EMP AC-3_DET. OVL POWER H/P MUTE-S.W. MUTE-MULTI MUTE-REAR MUTE-CENT. MUTE-FRONT STANDBY MUTE-T DSF1 FL-CK FL-DATA FL-RS AC-3 SELCK SEL A/D-PD

R469 10K

IC401
TMP87CS71F-****
MASTER_uCOM

P97 GND
VKK
P40/KEY0
P41/KEY1
P42/KEY2
P43/KEY3 VSELA
P44/KEY4 VSELB
P45/KEY5 MODE
P46/CIN6 K5
P47/CIN4 K4
P50/CIN3 K3
P51/CIN2 K2
P52/CIN1 K1
P53/CIN0
P54
P55/PWM

P10/INT0 P11/INT1 P12/INT2 P13/DVO P14 P15/TC2 P16 P17 TEST P21/XTIN P22/XTO RESET XIN XOUT MGND B.DOWN P20/INT5 P30/INT3 P31/TC4 P32/SCK P33/SI P34/SO P35/HSCK P36 P37/HSO

P66 ST83
P65 CLK2
P64 DATA2
P63 CE1
P62 CE2
P61 AC-3_RFDET.
P60 VOL-MUTE
VDD
P07 LED-OE
P06 LED-LE
P05 LED-SD
P04 LED-CK
P03 RL-REAR
P02 RL-CENT.
P01 RL-FRONT
P00 RESET

R487 10K
R415 10K
R414 10K
R413 10K
R412 10K

R407 R408 R409 R410 R411 4.7K

SUB-SYNC DSP-SO/M9
PROTECT DSP_CLK_IN ST/MONO STB4 CLK4 DATA4 TUNED TEST STEREO SCL RESET XIN XOUT MGND B.DOWN REMOCON SDA CLK3 STB5 DATA3

R424 10K
X401 CST4.00MGW
R402 100K

C401 0.1Z EMI_FIL LF401

R406 R405 R404 4.7K
R403 R401 10K

R481 4.7K

DSP-SO/M9

R426 510
R427 1K
R466 10K
R468 10K

D403 MA151A

TR401 DTA114EK
C412 10/16 *1
C413 220/6.3 *1
R455 220K
R454 10K
R457 4.7K
C414 CF0.12
R456 10K
TR402 DTC144EK
TR403 2SC2412(S)
D401 MA151A
C415 10/16
D402 MA151A
ZD401 MTZJ3.3A
R461 1K
C416 0.012
R460 4.7K
R458 10K
R459 1K
R452 1K
TR404 DTC144EK
R463 4.7(1W)
C418 0.012

to_1U-2952-1
to_1U-2950-2
to_1U-2950-2
to_1U-2950-2

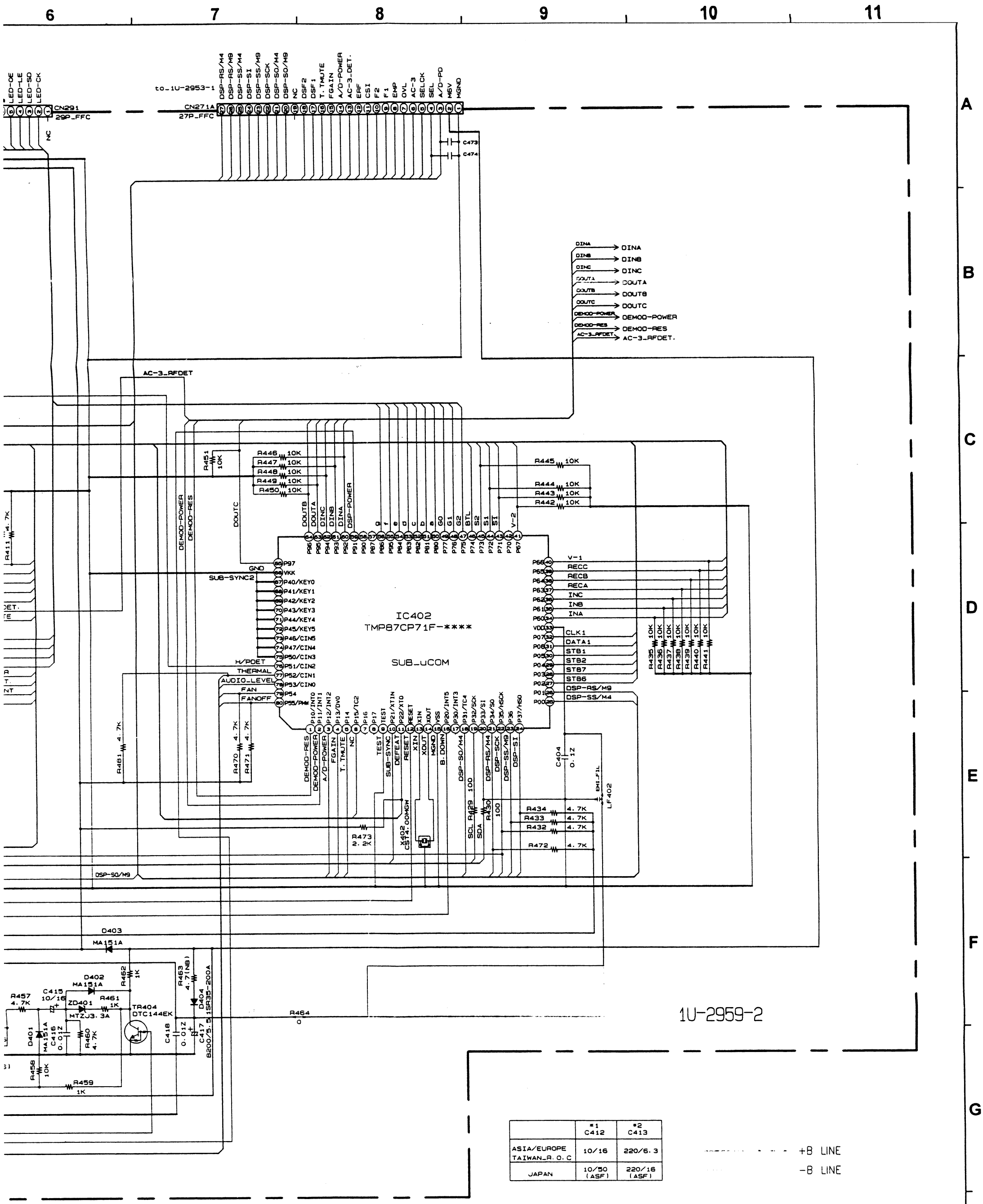

	*1 C412	*2 C413
ASIA/EUROPE TAIWAN_R.O.C	10/16	220/6.3
JAPAN	10/50 (ASF)	220/16 (ASF)

+B LINE

-B LINE

NOTES

ALL RESISTANCE VALUES IN OHM. k=1,000 OHM, M=1,000,000 OHM

ALL CAPACITANCE VALUES IN MICRO FARAD. P=MICRO-MICRO FARAD

EACH VOLTAGE AND CURRENT ARE MEASURED AT NO SIGNAL INPUT CONDITION.

CIRCUIT AND PARTS ARE SUBJECT TO CHANGE WITHOUT PRIOR NOTICE.

WARNING:
Parts marked with this symbol ⚠ have critical characteristics.
Use ONLY replacement parts recommended by the manufacturer.

CAUTION:
Before returning the unit to the customer, make sure you make either (1) a leakage current check or (2) a line to chassis resistance check. If the leakage current exceeds 0.5 milliamps, or if the resistance from chassis to either side of the power cord is less than 240 kohms, the unit is defective.

WARNING:
DO NOT return the unit to the customer until the problem is located and corrected.

SCHEMATIC DIAGRAM (15/16)

1 2 3 4 5 6

IN
VDP
TV/DBS
V-AUX
VCR-1
VCR-2
OUT
VCR-1
VCR-2
MONITOR

JK401 JK402 JK403 JK404
R401 75 VDPY
R402 75 VDPC
R403 75 TVY
R404 75 TVC
R405 75 V-AUXY
R406 75 V-AUXC
R407 75 VCR-1Y
R408 75 VCR-1C
R409 75 VCR-2Y
R410 75 VCR-2C
R411 22K
R412 75
R413 22K
R414 75
R415 22K
R416 75
R417 22K
R418 75
R423 22K
R424 75
R425 22K
R426 75
R429 10
C472 0.1Z
C401 0.1Z
C402 0.1Z
C403 1/50
C471 0.1Z
S-MONI.DET

IC403 IC404 TC4051BP
VDPY TVY VCR-1Y INA INB INC
VCR-2Y V-AUXY
IC401 IC402 IC405 IC406 IC407 IC408 IC409 MC14577CP
R419 100
R420 10K
C408 47/16 *1
R421 100
R422 10K
C407 47/16 *1
C415 0.01Z
C416 0.01Z
V-2
V-1
C405 47/16 *1
R427 100/10 100
R428 10K
C404 47/16 *1
C410 0.01Z
C411 0.01Z
C412 0.01Z
R433 100
C413 100/10
R434 10K
R435 510
R436 560
R431 100
C418 100/10
R432 10K
R437 510
R438 560
C417 47/16 *1
C420 47/16 *1
VCR-2C V-AUXC VCR-1C
C421 0.01Z
C422 0.01Z
R444 10K
R445 100
C423 47/16 *1
R443 100
R442 10K
C424 47/16 *1
C425 0.01Z
R440 100
R439 10K
R441 10K

1U-2951-1
S-VIDEO_UNIT

IN
VDP
TV
V-AUX
VCR-1
VCR-2
OUT
VCR-1
VCR-2
SOURCE
MONITOR

JK301 JK302 JK303
R301 75 VDPV
R302 75 TVV
R303 75 V-AUXV
R304 75 VCR-1V
R305 75 VCR-2V
R306 75
R307 22K
R308 75
R309 22K
R310 75
R311 22K
R312 75
R313 22K
C325 0.1Z
C301 1/50
C326 0.1Z
C302 1/50
C327 0.1Z
C303 1/50
W301
C304 0.1Z
C305 47/16 *1

IC304 IC305 TC4051BP
VDPV TVV VCR-1V INA2 INB2 INC2
VCR-2V V-AUXV
IC301 IC302 IC303 IC306 IC307 IC308 MC14577CP
HD14066BP
R323 100
R322 10K
C310 47/16 *1
R321 100
R320 10K
C309 47/16 *1
C308 47/16 *1
R317 100
R316 10K
C307 47/16 *1
R318 10K
R319 20K
R315 100
R314 10K
C306 47/16 *1
C314 0.01Z
C315 0.01Z
C316 0.01Z
C313 0.01Z
C312 0.01Z
C311 0.01Z
R328 100
C323 100/10
R329 10K
R330 510
R331 620
R324 100
C321 100/10
R325 10K
R326 510
R327 560
C317 47/16 *1
C318 47/16 *1
V-2-2
V-1-2
RECA2 RECB2 RECC2
C319 0.01Z
C320 0.01Z
R332 100
R333 10K
R334 100

1U-2951-2
C-VIDEO_UNIT

TO 1U-2950-2
4P_TUC-P
CN045
OSD
VGND
VGND
COMP

TO 1U-2950-2
13P_TUC-P
CN132
SI
S1
V-2-2
V-1-2
RECC2
RECB2
RECA2
INC2
INB2
INA2
VGND
C-6V
C6V

TO 1U-2950-2
TO 1U-2950-2
TO 1U-2950-1

5 6 7 8 9 10 11

IC406 MC14577CP R436 560

IC407 TC4051BP VDPC TVC VCR-1C INA INB INC VCR-2C V-AUXC C421 0.01Z C422 0.01Z

IC408 TC4051BP VDPC TVC VCR-1C RECA RECB RECC VCR-2C V-AUXC C433 0.01Z C434 0.01Z

R446 100 C435 100/10 IC412 MC14577CP R447 10K R448 510 R449 560

TR401 2SC2412(S) R459 10K D404 1SS270A TR402 2SC1815(BL) C454 10/16 R460 6.2K R461 200 R462 1(NB) D403 1SS270A D405 1SS270A D406 1SS270A

C462 12P C463 10P XL402 HC-49U 14.32MHz R487 20

IC414 M35015-204SP S1 S2 R458 10K IC413 MC74HC4053N C455 *1 47/16 C456 0.01Z C457 *2 10/16 C438 *2 10/16 R463 1K R464 1(NB) C457 *1 47/16 C458 0.01Z C459 33P C460 33P C461 33P DATA3 CLK3 ST R465 10 C464 CK3300P R486 1K R485 1K

IC409 MC14577CP R445 100 R444 10K C423 *1 47/16 R443 100 R442 10K C424 *1 47/16

IC409 MC14577CP C425 0.01Z C426 0.01Z IC411 HD140668P V-2 V-1

IC402 MC14577CP R440 100 R439 10K R441 10K R454 20K

IC412 MC14577CP R450 100 C430 100/10 R451 10K R452 510 R453 560 C429 *1 47/16 C432 *1 47/16

IC416 MC14577CP C439 *1 47/16 R455 100 R456 10K C440 100/10 R457 100 C441 *1 47/16

IC416 MC14577CP

C451 CQ0.022 C453 4.7/50 R466 1K C452 100P(J) R467 470K R491 0 R492 0 R484 33K

IC415 NJM2229S C446 *1 C448 *1 R455 10/16 *1 R463 5K

XL401 CS8503F2 503KHZ R468 390 C444 CK3300P C445 CK470P C447 CF0.068 C448 *1 R458 1.5K C449 150P(J) R469 1.5K R470 10K R471 51K C450 0.0012 C465 0.01Z C457 *3 100/10 C466 CQ0.0081 R483 7.5K

SYNC. DET

R472 1.2K R475 220 C443 CF0.047 D407 1SS270A C442 CF0.047 R473 8.2K TR403 R476 8.2K R474 47K R477 47K TR404 R478 22K D408 1SS270A R479 4.7K R480 4.7K R481 1K C469 1/50 C470 CF0.047 D409 1SS270A R482 2K R488 47K R489 2K TR405 DTC114EK

2SA1037(S/R) 2SC2412(S)

1U-2951-2
C-VIDEO_UNIT

TO 1U-2950-2 4P_TUC-P OSD VGND VGND COMP CN046

TO 1U-2950-2 4P_TUC-P OSD VGND VGND COMP CN047

TO 1U-2950-2 8P_TUC-P RESET DATA3 CLK3 ST SYNC. DET S-MONI. DET S2 S-SIG. DET CN082

TO 1U-2950-2 12P_TUC-P S1 V-2 V-1 RECC RECB RECA INC INB INA VGND C-6V C6V CN123

TO 1U-2950-1 C-6V C6V VGND VGND S-6V S6V 6P_TUC-P CN064

TO 1U-2950-2 ST S1 V-2-2 V-1-2 RECC2 RECB2 RECA2 INC2 INB2 INA2 VGND C-6V C6V 13P_TUC-P CN132

IC303 MC14577CP R332 100 R333 10K R334 100 HD140668P

	*1 C305-310 · 317 · 318 · 404 · 405 C407 · 408 · 417 · 420 · 423 · 424 C429 · 432 · 439 · 441 · 455 · 457	*2 C437 · 438	*3 C467
ASIA/EUROPE TAIWAN R.O.C	47/16	10/16	100/10
JAPAN	47/16 (ASF)	10/16 (ASF)	100/25 (ASF)

+B LINE

-B LINE

SIGNAL LINE

NOTES

ALL RESISTANCE VALUES IN OHM. k=1,000 OHM. M=1,000,000 OHM

ALL CAPACITANCE VALUES IN MICRO FARAD. P=MICRO-MICRO FARAD

EACH VOLTAGE AND CURRENT ARE MEASURED AT NO SIGNAL INPUT CONDITION.

CIRCUIT AND PARTS ARE SUBJECT TO CHANGE WITHOUT PRIOR NOTICE.

WARNING:
Parts marked with this symbol ⚠ have critical characteristics.
Use ONLY replacement parts recommended by the manufacturer.

CAUTION:
Before returning the unit to the customer, make sure you make either (1) a leakage current check or (2) a line to chassis resistance check. If the leakage current exceeds 0.5 milliamps, or if the resistance from chassis to either side of the power cord is less than 240 kohms, the unit is defective.

WARNING:
DO NOT return the unit to the customer until the problem is located and corrected.

SCHEMATIC DIAGRAM (16/16)

1 2 3 4 5 6 7

TO 1U-2953-2

MSV MGND STANDBY REMOCON K1 K2 K3 K4 K5 VSELA VSELB FL-CK FL-DATA FL-RS G0 G1 G2 a. b. c. d. e. f. g. LED-OE LED-LE LED-SD LED-CK NC

CN291
29P_FFC_CON. (SIDE)

TO 1U-2950-1

CN053
5P-KR

-VKK FL FL LEDSV LEDGND

-32.6V

1U-2951-3
DISPLAY_UNIT

TR101 2SB1041(A) TR102 2SB1041(A) TR103 2SB1041(A)

R121 10K R122 10K R123 10K

R124 1K R125 1K R126 1K

TR104 DTC114EK TR105 DTC114EK TR106 DTC114EK

C101 470/10

G0 G1 G2

a. b. c. d. e. f. g.

R101 L-A 240 R102 L-B 240 R103 L-C 240 R104 L-D 240 R105 L-E 240 R106 L-F 240 R107 L-G 240

TR107 DTC114EK TR108 DTC114EK TR109 DTC114EK TR110 DTC114EK TR111 DTC114EK TR112 DTC114EK TR113 DTC114EK

C102 0.1Z

IC101 M66310FP

QA QB QC QD QE QF QG QH QI QJ QK QL

R127 10K

LED-OE LED-LE LED-SD LED-CK

R128 10K

C107 CK1000P

QL R119 270 LD111 TAPE=2 MONI-T

QK R118 390 QJ R117 390 LD110 DIGITAL DIGITAL

QI R116 390 LD109 DOLBY

QH R115 680 LD108 OVERLOAD

QG R114 680 LD107 LFE

QF R113 680 LD106 AC3SR

QE R112 680 LD105 AC3S

QD R111 680 LD104 AC3SL

QC R110 680 LD103 AC3R

QB R109 680 LD102 AC3C

QA R108 680 LD101 AC3L

LD101-108, 111 SEL1210S
LD109 SEL1410E (TP2)
LD110 SML1216W (LED)

L-A L-B L-C L-D L-E L-F L-G 0 1 2

CN103A 10P_TKC-A

MSV GND K1 REMOCON STANDBY

5P-KR

TO 1U-2949-

CN103B 10P_TKC-A

L-A L-B L-C L-D L-E L-F L-G 0 1 2

L-G L-E L-A L-F L-B

LD114
LB-303VA

L-C 0 L-D 1 2

1U-2951-6
VOLUME_LED_UNIT

	*1 C103	*2 C105
ASIA/EUROPE TAIWAN R.O.C	100/50	330/6.3
JAPAN	100/50 (ASF)	330/6.3 (ASF)

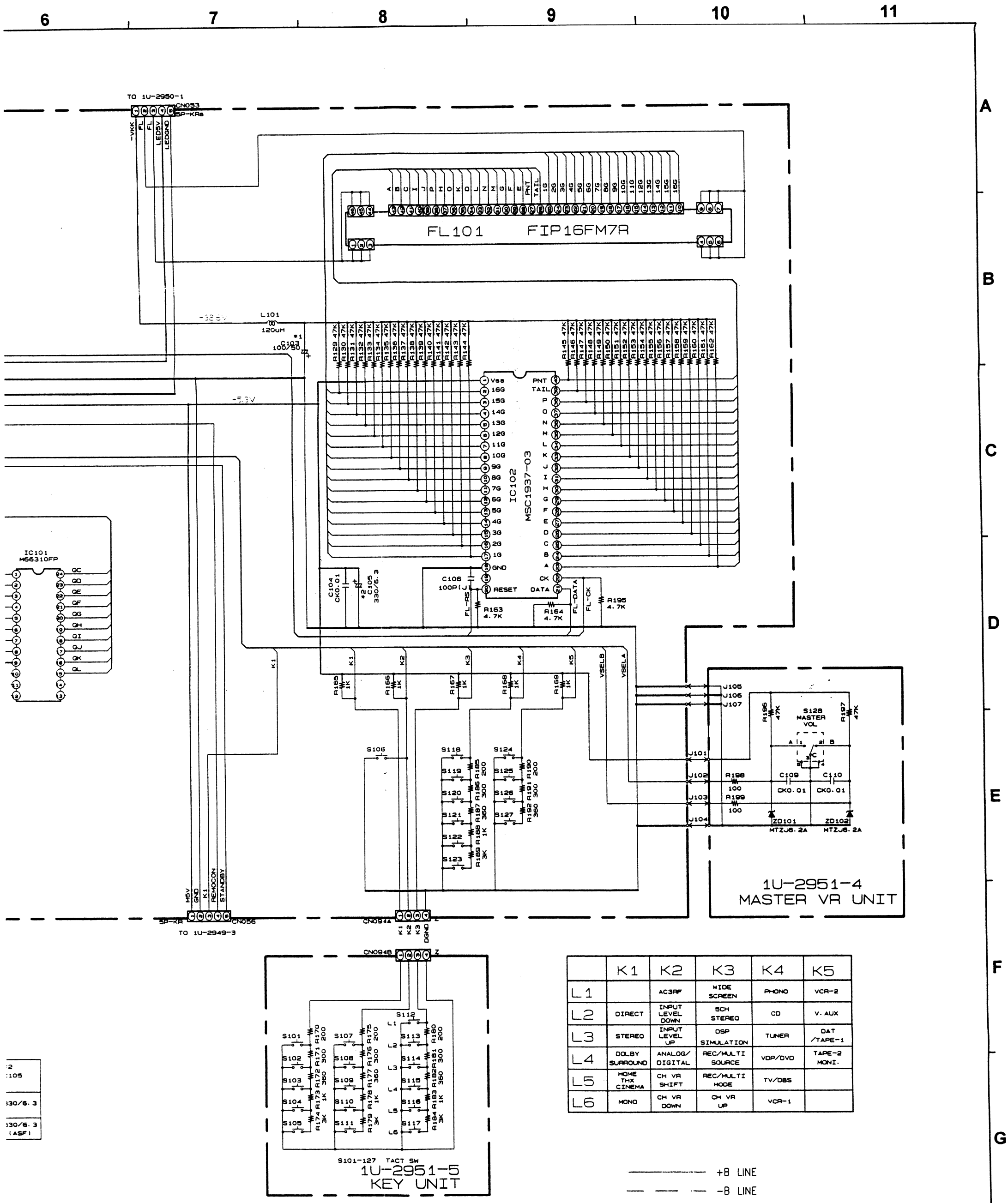

	K1	K2	K3	K4	K5
L1		AC3RF	WIDE SCREEN	PHONO	VCR-2
L2	DIRECT	INPUT LEVEL DOWN	5CH STEREO	CD	V. AUX
L3	STEREO	INPUT LEVEL UP	DSP SIMULATION	TUNER	DAT /TAPE-1
L4	DOLBY SURROUND	ANALOG/ DIGITAL	REC/MULTI SOURCE	VDP/DVD	TAPE-2 MONI.
L5	HOME THX CINEMA	CH VR SHIFT	REC/MULTI MODE	TV/DBS	
L6	MONO	CH VR DOWN	CH VR UP	VCR-1	

+B LINE

-B LINE

NOTES

ALL RESISTANCE VALUES IN OHM. k=1,000 OHM, M=1,000,000 OHM

ALL CAPACITANCE VALUES IN MICRO FARAD. P=MICRO-MICRO FARAD

EACH VOLTAGE AND CURRENT ARE MEASURED AT NO SIGNAL INPUT CONDITION.

CIRCUIT AND PARTS ARE SUBJECT TO CHANGE WITHOUT PRIOR NOTICE.

WARNING:
Parts marked with this symbol ⚠ ▒▒ have critical characteristics.
Use ONLY replacement parts recommended by the manufacturer.

CAUTION:
Before returning the unit to the customer, make sure you make either (1) a leakage current check or (2) a line to chassis resistance check. If the leakage current exceeds 0.5 milliamps, or if the resistance from chassis to either side of the power cord is less than 240 kohms, the unit is defective.

WARNING:
DO NOT return the unit to the customer until the problem is located and corrected.

REMOTE CONTROL UNIT (RC-813)

1 2 3 4 5 6 7 8

A B C D E

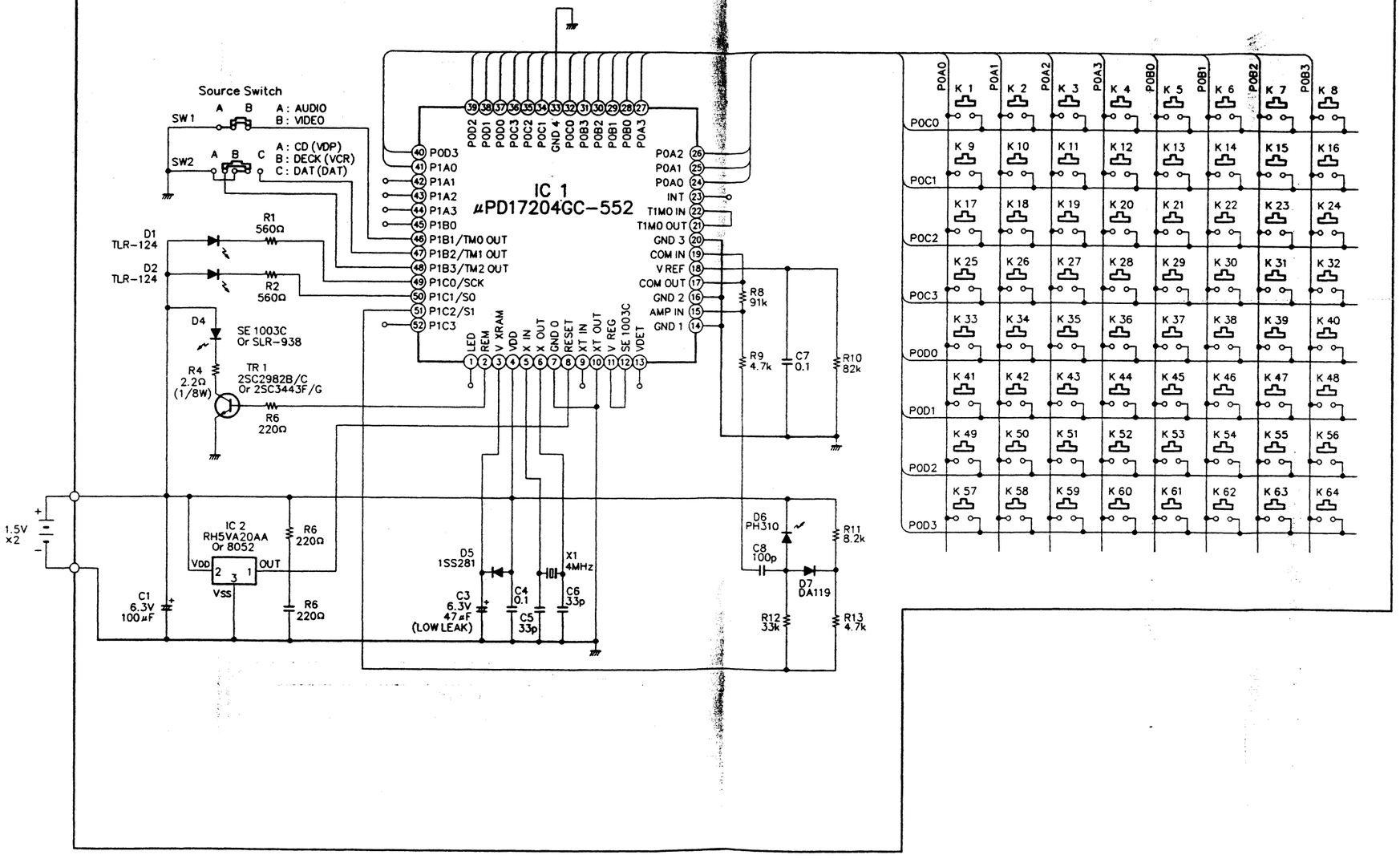

ENO-00343 / Druck 17