DENON

Ver. 4

Please refer to the MODIFICATION NOTICE.

# SERVICE MANUAL

| MODEL | JP | E3 | E2 | EK | EA | E1 | E1K | E1C |
|---|---|---|---|---|---|---|---|---|
| AVR-E400 | | ✓ | | | | | | |
| AVR-X2000 | | ✓ | ✓ | | | ✓ | | ✓ |

## INTEGRATED NETWORK AV RECEIVER

• Cautions when replacing the FRONT PANEL(Only AVR-X2000E3):Depending on when the model was manufactured, there may be washers in the FRONT PANEL screw positions. Washers are not used in the replacement FRONT PANEL.If you are replacing a FRONT PANEL that has washers, discard the washers.

• For purposes of improvement, specifications and design are subject to change without notice.

• Please use this service manual with referring to the operating instructions without fail.

• Some illustrations using in this service manual are slightly different from the actual set.

DENON

D&M Holdings Inc.

# CONTENTS


**ABOUT THIS MANUAL** ..... 3
What you can do with this manual ..... 3
Using Adobe Reader (Windows version) ..... 4
**SAFETY PRECAUTIONS** ..... 6
**NOTE FOR SCHEMATIC DIAGRAM** ..... 7
**NOTE FOR PARTS LIST** ..... 7
**TECHNICAL SPECIFICATIONS** ..... 9
**DIMENSION** ..... 10
**CAUTION IN SERVICING** ..... 11
Initializing INTEGRATED NETWORK AV RECEIVER ..... 11
Service Jig ..... 11
**DISASSEMBLY** ..... 12
1. FRONT PANEL ASSY ..... 14
2. PCB MX PORT/PCB RS232C (AVR-X2000E3 only) ..... 15
3. PCB HDMI ..... 16
4. POWER TRANS MAIN ..... 17
5. PCB VIDEO ASSY ..... 17
6. PCB SMPS ..... 18
7. RADIATOR ASSY ..... 20
**SPECIAL MODE** ..... 22
Special mode setting button (for E400E3 model) ..... 22
Special mode setting button (for X2000 model) ..... 23
1. µcom/DSP Version display mode ..... 24
2. PANEL/REMOTE LOCK Selection mode ..... 28
3. Service Related Selection mode ..... 29
**BLOCK DIAGRAM** ..... 32
4. Protection Pass mode ..... 49
5. DM860A Reboot mode ..... 49
6. Remote ID Setup mode ..... 50
7. NETWORK Initialization mode ..... 50
**JIG FOR SERVICING** ..... 52
**WHEN THE MICROPROCESSOR IS REPLACED WITH A NEW ONE** ..... 55
**PROCEDURE FOR UPGRADING THE VERSION OF THE FIRMWARE** ..... 55
1. How to update by DFW ..... 55
2. How to update by DPMS ..... 59
3. How to update by USB Memory ..... 66
**ADJUSTMENT** ..... 74
**TROUBLE SHOOTING** ..... 82
1. POWER ..... 82
2. Analog video ..... 83
3. HDMI/DVI ..... 87
4. AUDIO ..... 89
5. Network/USB ..... 92
6. SMPS ..... 95
**CLOCK FLOW & WAVE FORM IN DIGITAL BLOCK DIAGRAM** ..... 98
**LEVEL DIAGRAM** ..... 99
**BLOCK DIAGRAM** ..... 105
**POWER DIAGRAM** ..... 106
**WIRING DIAGRAM** ..... 107
**PRINTED WIRING BOARDS** ..... 108
**SCHEMATIC DIAGRAMS (1/24)** ..... 119
FRONT UNIT (1/1) ..... 119
INPUT UNIT (1/1) ..... 120
SMPS UNIT (1/1) ..... 121
VIDEO UNIT (1/3) ..... 122
VIDEO UNIT (2/3) ..... 123
VIDEO UNIT (3/3) ..... 124
AMP UNIT (1/2) ..... 125
AMP UNIT (2/2) ..... 126
MAIN UNIT (1/2) ..... 127
MAIN UNIT (2/2) ..... 128
HDMI UNIT (1/13) ..... 129
HDMI UNIT (2/13) ..... 130
HDMI UNIT (3/13) ..... 131
HDMI UNIT (4/13) ..... 132
HDMI UNIT (5/13) ..... 133
HDMI UNIT (6/13) ..... 134
HDMI UNIT (7/13) ..... 135
HDMI UNIT (8/13) ..... 136
HDMI UNIT (9/13) ..... 137
HDMI UNIT (10/13) ..... 138
HDMI UNIT (10/13) ..... 139
HDMI UNIT (11/13) ..... 140
HDMI UNIT (12/13) ..... 141
HDMI UNIT (13/13) ..... 142
**EXPLODED VIEW** ..... 143
**PARTS LIST OF EXPLODED VIEW** ..... 145
**PACKING VIEW** ..... 146
**PARTS LIST OF PACKING & ACCESSORIES** ..... 147
**SEMICONDUCTORS** ..... 148
1. IC's ..... 148
2. FL DISPLAY ..... 170

# ABOUT THIS MANUAL

Read the following information before using the service manual.

## What you can do with this manual

### Search for a Ref. No. (phrase) (Ctrl+Shift+F)

You can use the search function in Acrobat Reader to search for a Ref. No. in schematic diagrams, printed wiring board diagrams, block diagrams, and parts lists.

1.Press **Ctrl+Shift+F** on the keyboard.

- The Search window appears.

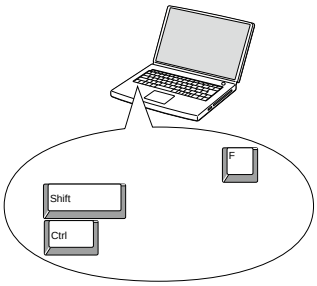


2.Enter the Ref. No. you want to search for in the Search window, and then click the **Search** button.

•A list of search results appears.

3.Click an item on the list.

• The screen jumps to the page for that item, and the search phrase is displayed.

### Jump to the target of a schematic diagram connector

Click the Ref. No. of the target connector in the red box around a schematic diagram connector.

•The screen jumps to the target connector.

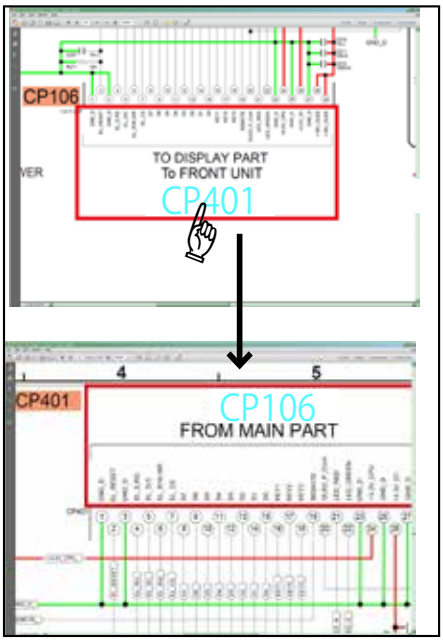


•Page magnification stays the same as before the jump.

## Using Adobe Reader (Windows version)

### Add notes to this data (Sign)

The Sign function lets you add notes to the data in this manual.
Save the file once you have finished adding notes.

**[Example using Adobe Reader X]**
On the **"View"** menu, click **"Sign"**.

- The Sign pane appears.

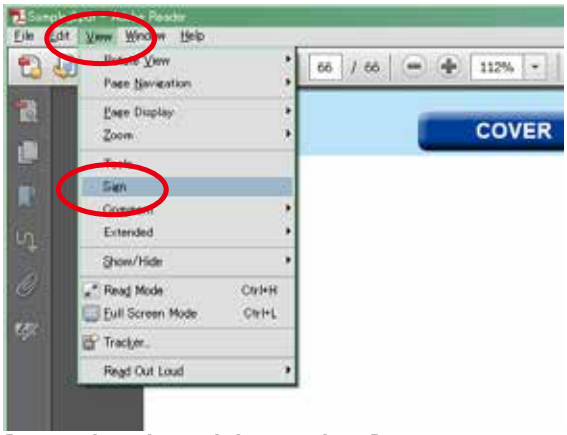


**[Example using Adobe Reader 9]**
On the **"Document"** menu, click **"Sign"**.

### Magnify schematic / printed wiring board diagrams - 1

### (Ctrl+Space, mouse operation)

Press **Ctrl+Space** on the keyboard and drag the mouse to select the area you want to view.

- The selected area is magnified.

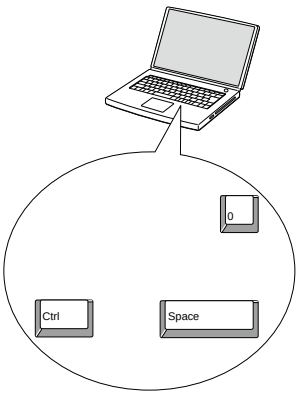


- When you want to move the area shown, hold down **Space** and drag the mouse.
- When you want to show a full page view, press **Ctrl+0** on the keyboard.

### Print a magnified part of the manual

The Properties dialog box and functions will vary depending on your printer.

1. Drag the mouse to magnify the part you want to print.
2. On the **"File"** menu, click **"Print"**.
3. Configure the following settings in the Print dialog box.

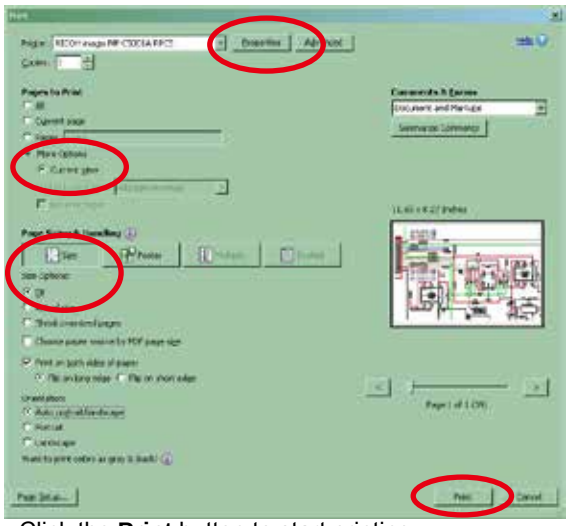

4. Click the **Print** button to start printing.

- **Properties**
  Click this button and check that the printer is set to a suitable paper size.
- **Page to print**
  Select the following checkbox.
  "**More Options**" : "**Current View**"
- **Page Sizing & Handling**
  Select the following checkbox.
  "**Size**" / "**Size Options**" : "**Fit**"

## Magnify schematic / printed wiring board diagrams - 2

## (Pan & Zoom function)

The Pan & Zoom function lets you see which part of a magnified diagram is being shown in a separate window.

**[Example using Adobe Reader X]**
On the **"View"** menu, point to **"Zoom"**, and then click **"Pan & Zoom"**.

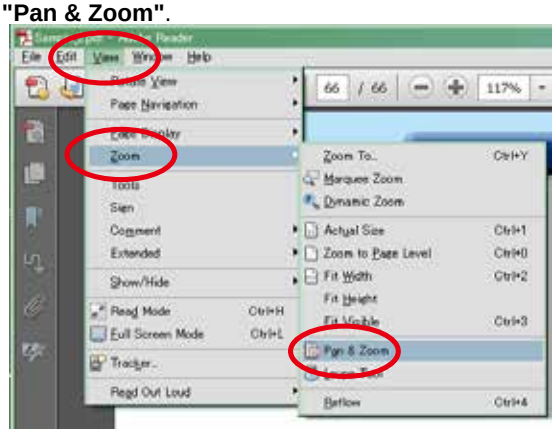


- The Pan & Zoom window appears on the screen.

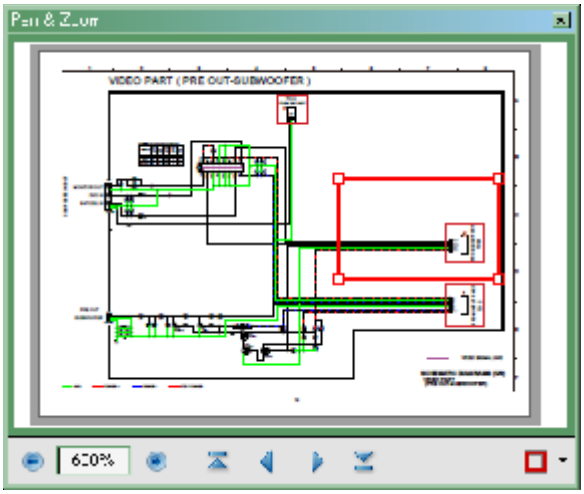


**[Example using Adobe Reader 9]**
On the **"Tools"** menu, point to **"Select & Zoom"**, and then click **"Pan & Zoom Window"**.

## Magnify schematic / printed wiring board diagrams - 3

## (Loupe Tool function)

The Loupe Tool function lets you magnify a specific part of a diagram in a separate window.

**[Example using Adobe Reader X]**
On the **"View"** menu, point to **"Zoom"**, and then click **"Loupe Tool"**.

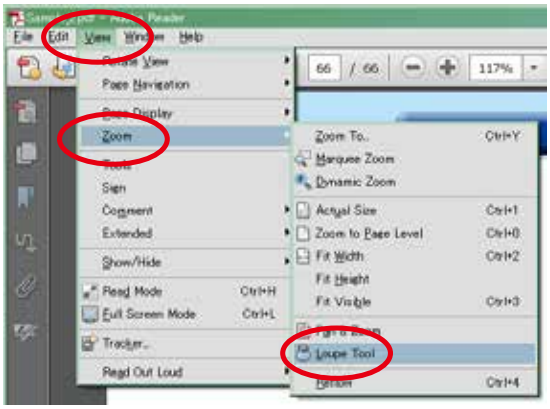


- The Loupe Tool window appears on the screen.

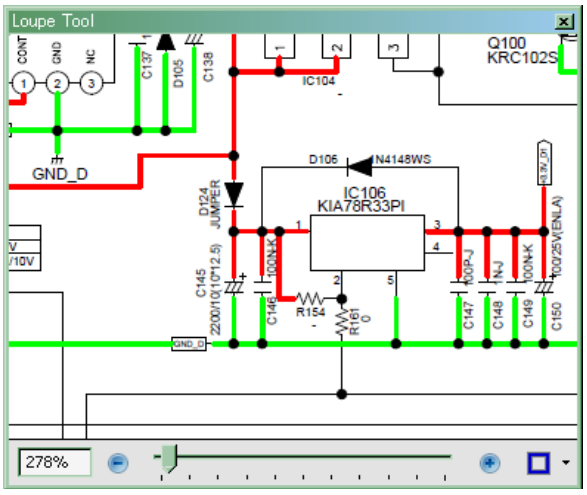


**[Example using Adobe Reader 9]**
On the **"Tools"** menu, point to **"Select & Zoom"**, and then click **"Loupe Tool Window"**.

# SAFETY PRECAUTIONS

The following items should be checked for continued protection of the customer and the service technician.

## leakage current check

Before returning the set to the customer, be sure to carry out either (1) a leakage current check or (2) a line to chassis resistance check. If the leakage current exceeds 0.5 milliamps, or if the resistance from chassis to either side of the power cord is less than 460 kohms, the set is defective.

Be sure to test for leakage current with the AC plug in both polarities, in addition, when the set's power is in each state (on, off and standby mode), if applicable.

**CAUTION** **Please heed the following cautions and instructions during servicing and inspection.**

◎ **Heed the cautions!**

Cautions which are delicate in particular for servicing are labeled on the cabinets, the parts and the chassis, etc. Be sure to heed these cautions and the cautions described in the handling instructions.

◎ **Cautions concerning electric shock!**

(1) An AC voltage is impressed on this set, so if you touch internal metal parts when the set is energized, you may get an electric shock. Avoid getting an electric shock, by using an isolating transformer and wearing gloves when servicing while the set is energized, or by unplugging the power cord when replacing parts, for example.

(2) There are high voltage parts inside. Handle with extra care when the set is energized.

◎ **Caution concerning disassembly and assembly!**

Through great care is taken when parts were manufactured from sheet metal, there may be burrs on the edges of parts. The burrs could cause injury if fingers are moved across them in some rare cases. Wear gloves to protect your hands.

◎ **Use only designated parts!**

The set's parts have specific safety properties (fire resistance, voltage resistance, etc.). Be sure to use parts which have the same properties for replacement. The burrs have the same properties. In particular, for the important safety parts that are indicated by the ⚠ mark on schematic diagrams and parts lists, be sure to use the designated parts.

◎ **Be sure to mount parts and arrange the wires as they were originally placed!**

For safety seasons, some parts use tapes, tubes or other insulating materials, and some parts are mounted away from the surface of printed circuit boards. Care is also taken with the positions of the wires by arranging them and using clamps to keep them away from heating and high voltage parts, so be sure to set everything back as it was originally placed.

◎ **Make a safety check after servicing!**

Check that all screws, parts and wires removed or disconnected when servicing have been put back in their original positions, check that no serviced parts have deteriorate the area around. Then make an insulation check on the external metal connectors and between the blades of the power plug, and otherwise check that safety is ensured.

(Insulation check procedure)

Unplug the power cord from the power outlet, disconnect the antenna, plugs, etc., and on the power. Using a 500V insulation resistance tester, check that the insulation resistance value between the inplug and the externally exposed metal parts (antenna terminal, headphones terminal, input terminal, etc.) is 1MΩ or greater. If it is less, the set must be inspected and repaired.

**CAUTION** **Concerning important safety parts**

Many of the electric and the structural parts used in the set have special safety properties. In most cases these properties are difficult to distinguish by sight, and the use of replacement parts with higher ratings (rated power and withstand voltage) does not necessarily guarantee that safety performance will be preserved. Parts with safety properties are indicated as shown below on the wiring diagrams and the parts list in this service manual. Be sure to replace them with the parts which have the designated part number.

(1) Schematic diagrams.....Indicated by the ⚠ mark.

(2) Parts lists.....Indicated by the ⚠ mark.

The use of parts other than the designated parts could cause electric shocks, fires or other dangerous situations.

# NOTE FOR SCHEMATIC DIAGRAM

**WARNING:**

Parts indicated by the ⚠ mark have critical characteristics. Use ONLY replacement parts recommended by the manufacturer.

**CAUTION:**

Before returning the set to the customer, be sure to carry out either (1) a leakage current check or (2) a line to chassis resistance check. If the leakage current exceeds 0.5 milliamps, or if the resistance from chassis to either side of the power cord is less than 460 kohms, the set is defective.

**WARNING:**

DO NOT return the set to the customer unless the problem is identified and remedied.

**NOTICE:**

ALL RESISTANCE VALUES IN OHM. k=1,000 OHM / M=1,000,000 OHM

ALL CAPACITANCE VALUES ARE EXPRESSED IN MICRO FARAD, UNLESS OTHERWISE INDICATED. P INDICATES MICRO-MICRO FARAD. EACH VOLTAGE AND CURRENT ARE MEASURED AT NO SIGNAL INPUT CONDITION. CIRCUIT AND PARTS ARE SUBJECT TO CHANGE WITHOUT PRIOR NOTICE.

# NOTE FOR PARTS LIST

1. Parts indicated by "nsp" on this table cannot be supplied.
2. When ordering a part, make a clear distinction between "1" and "I" (i) to avoid mis-supplying.
3. A part ordered without specifying its part number can not be supplied.
4. Part indicated by "★" mark is not illustrated in the exploded view.
5. General-purpose Carbon Film Resistor in the P.W.Board parts list. (Refer to the Schematic Diagram for those parts.)
6. General-purpose Carbon Chip Resistors are not included are not included in the P.W.Board parts list. (Refer to the Schematic Diagram for those parts.)

**WARNING:** Parts indicated by the ⚠ mark have critical characteristics. Use ONLY replacement parts recommended by the manufacturer.

## INSTRUCTIONS FOR HANDLING SEMI-CONDUCTORS AND OPTICAL UNIT

Electrostatic breakdown of the semi-conductors or optical pickup may occur due to a potential difference caused by electrostatic charge during unpacking or repair work.

1. Ground for Human Body
   Be sure to wear a grounding band (1 MΩ) that is properly grounded to remove any static electricity that may be charged on the body.
2. Ground for Workbench
   Be sure to place a conductive sheet or copper plate with proper grounding (1 MΩ) on the workbench or other surface, where the semi-conductors are to be placed. Because the static electricity charge on clothing will not escape through the body grounding band, be careful to avoid contacting semi-conductors with your clothing

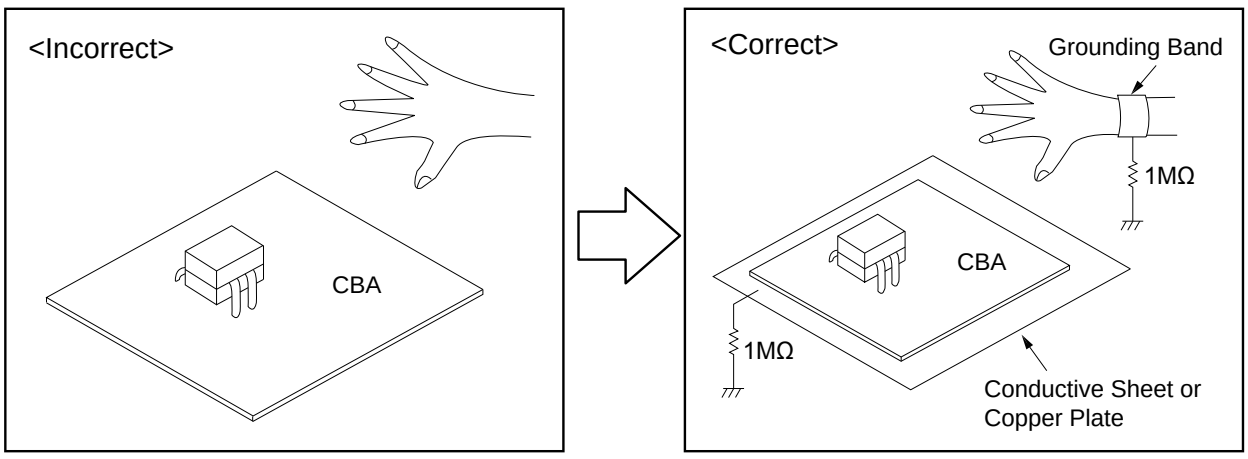

Personal notes:

# TECHNICAL SPECIFICATIONS

## ❑ Audio section

- **Power amplifier**

**Rated output(for E400 model):**

**Front:**

90 W + 90 W (8 Ω/ohms, 20 Hz – 20 kHz with 0.08 % T.H.D.)
125 W + 125 W (6 Ω/ohms, 1 kHz with 0.7 % T.H.D.)

**Center:**

90 W (8 Ω/ohms, 20 Hz – 20 kHz with 0.08 % T.H.D.)
125 W (6 Ω/ohms, 1 kHz with 0.7 % T.H.D.)

**Surround:**

90 W + 90 W (8 Ω/ohms, 20 Hz – 20 kHz with 0.08 % T.H.D.)
125 W + 125 W (6 Ω/ohms, 1 kHz with 0.7 % T.H.D.)

**Surround back:**

90 W + 90 W (8 Ω/ohms, 20 Hz – 20 kHz with 0.08 % T.H.D.)
125 W + 125 W (6 Ω/ohms, 1 kHz with 0.7 % T.H.D.)

**Rated output(for X2000 model):**

**Front:**

90 W + 90 W (8 Ω/ohms, 20 Hz – 20 kHz with 0.08 % T.H.D.)
125 W + 125 W (6 Ω/ohms, 1 kHz with 0.7 % T.H.D.)

**Center:**

90 W (8 Ω/ohms, 20 Hz – 20 kHz with 0.08 % T.H.D.)
125 W (6 Ω/ohms, 1 kHz with 0.7 % T.H.D.)

**Surround:**

90 W + 90 W (8 Ω/ohms, 20 Hz – 20 kHz with 0.08 % T.H.D.)
125 W + 125 W (6 Ω/ohms, 1 kHz with 0.7 % T.H.D.)

**Surround back:**

90 W + 90 W (8 Ω/ohms, 20 Hz – 20 kHz with 0.08 % T.H.D.)
125 W + 125 W (6 Ω/ohms, 1 kHz with 0.7 % T.H.D.)

**Output connectors:** 6 – 16 Ω/ohms

- **Analog**

**Input sensitivity/Input impedance:** 200 mV/47 kΩ/kohms

**Frequency response:** 10 Hz – 100 kHz — +1, –3 dB (DIRECT mode)

**S/N :** 100 dB (IHF–A weighted, DIRECT mode)

## ❑ Tuner section

(Note: µV at 75 Ω/ohms, 0 dBf = 1 x 10–15 W)

| | | |
|---|---|---|
| **Receiving Range:** | FM 87.5 MHz – 107.9 MHz(for E400 model)<br>AM 520 kHz – 1710 kHz(for E400 model)<br>FM 87.50 MHz – 108.00 MHz(for X2000 model)<br>AM 522 kHz – 1611 kHz(for X2000 model) | |
| **Usable Sensitivity:** | FM 1.2 µV (12.8 dBf)<br>AM 18 µV | |
| **50 dB Quieting Sensitivity:** | MONO | 2.8 µV (20.2 dBf) |
| **S/N :** | MONO | 70 dB (IHF–A weighted, DIRECT mode) |
| | STEREO | 67 dB (IHF–A weighted, DIRECT mode) |
| **Total harmonic Distortion:** | MONO | 0.7 % (1 kHz) |
| | STEREO | 1.0 % (1 kHz) |

## ❑ General

**Power supply:**AC 120 V, 60 Hz
AC 230 V, 50/60 Hz

**Power consumption:** 460 W

**Power consumption in standby mode:** 0.1 W

**Power consumption in CEC standby mode:**0.5 W

**Power consumption in network standby mode:** 2.7 W

# DIMENSION

**[AVR-E400 model]**

Unit : in. (mm)

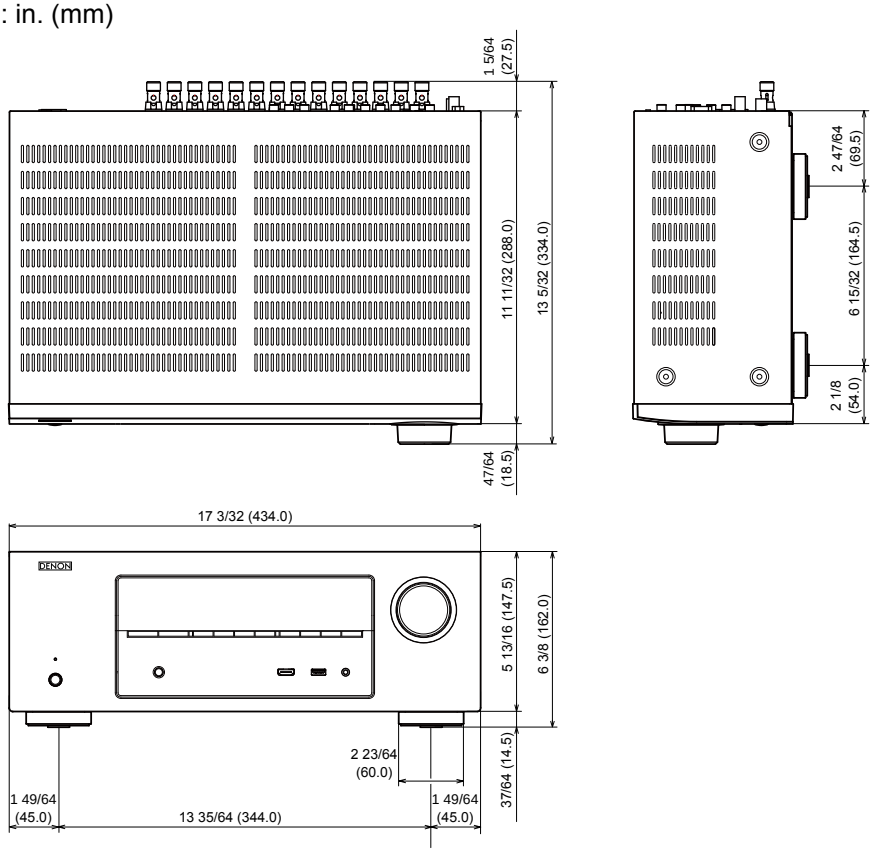


Weight : 20 lbs 12 oz (9.4 kg)

**[AVR-X2000 model]**

Unit : in. (mm)

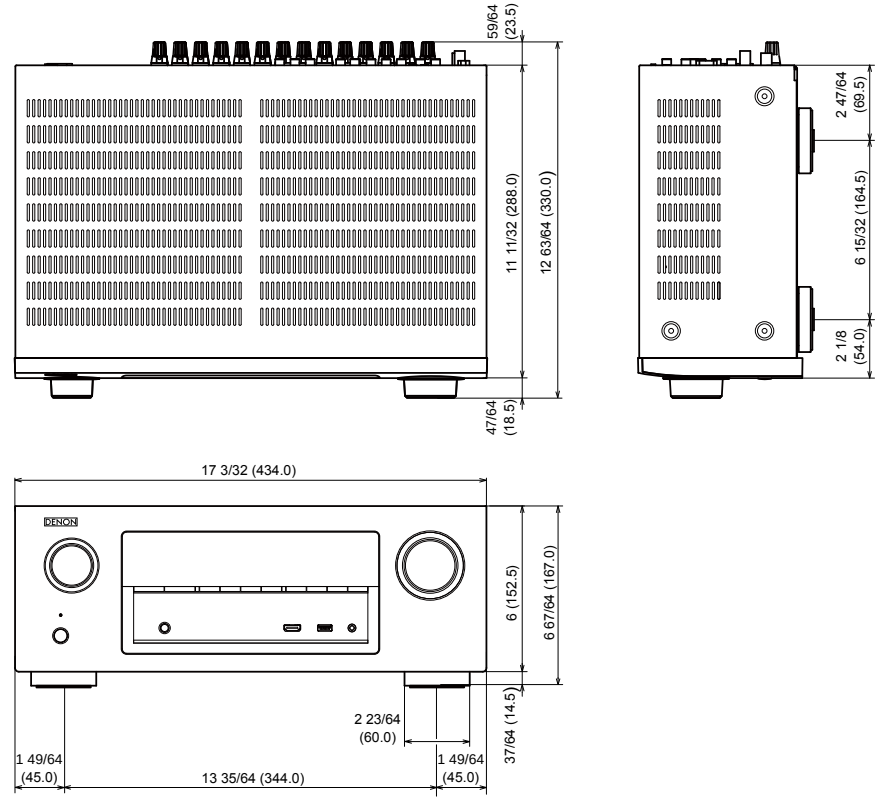


Weight : 20 lbs 15 oz (9.5 kg)

# CAUTION IN SERVICING

## Initializing INTEGRATED NETWORK AV RECEIVER

INTEGRATED NETWORK AV RECEIVER initialization should be performed when the µcom, peripheral parts of µcom, and Digital PCB were replaced.

1. Turn off the power pressing "Power operation (⏻)" button.
2. Press "Power operation (⏻)" button while simultaneously while pressing "ZONE2 SOURCE" and "DIMMER" buttons.
3. Check that the entire display is flashing at intervals of about 1 second, and then release the 2 buttons.
   The microprocessor will be initialized.

NOTE: •If step 3 fails, start over from step 1.
•All user settings will be lost and the factory setting will be recovered after the set is initialized.
So make sure to note down your setting beforehand for restoring after the initialization.

**[AVR-E400E3 model]**

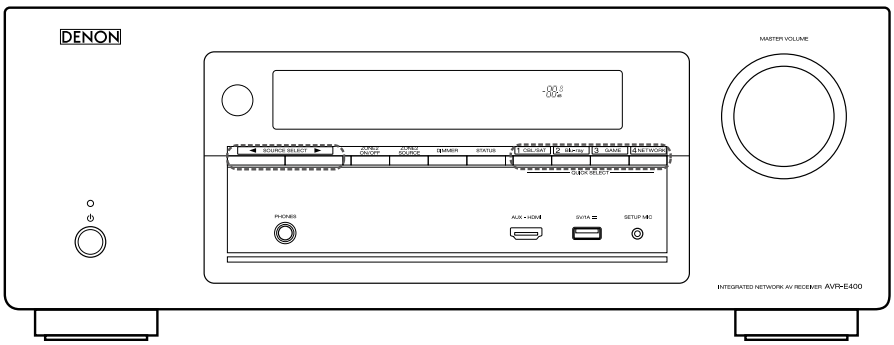


**[AVR-X2000 model]**

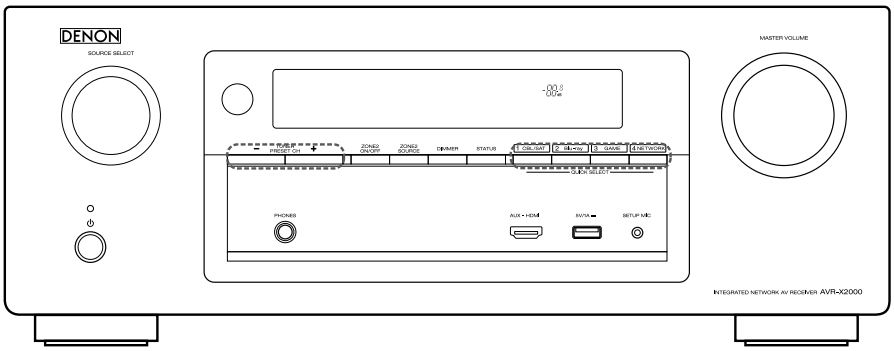


## Service Jig

When you repair the printing board, you can use the following JIG (Extension cable kit).
Please order it from Denon Official Service Distributor in your region if necessary.

8U-110084S : EXTENSION UNIT KIT : 1 Set
8U-110136S : EXTENSION UNIT KIT : 1 Set
(Refer to 52 page.)

When you update the firmware by DFW, you can use the following JIG (RS232C to internal connector conversion adapter with 4P FFC kit ).
Please order it from Denon Official Service Distributor in your region if necessary.

8U-210100S : WRITING KIT : 1 Set
(Refer to 55 page.)

# DISASSEMBLY

- Disassemble in order of the arrow in the following figure.
- In the case of the re-assembling, assemble it in order of the reverse of the following flow.
- In the case of the re-assembling, observe "attention of assembling".
- If wire bundles are untied or moved to perform adjustment or replace parts etc., be sure to rearrange them neatly as they were originally bundled or placed afterward.
  Otherwise, incorrect arrangement can be a cause of noise generation.

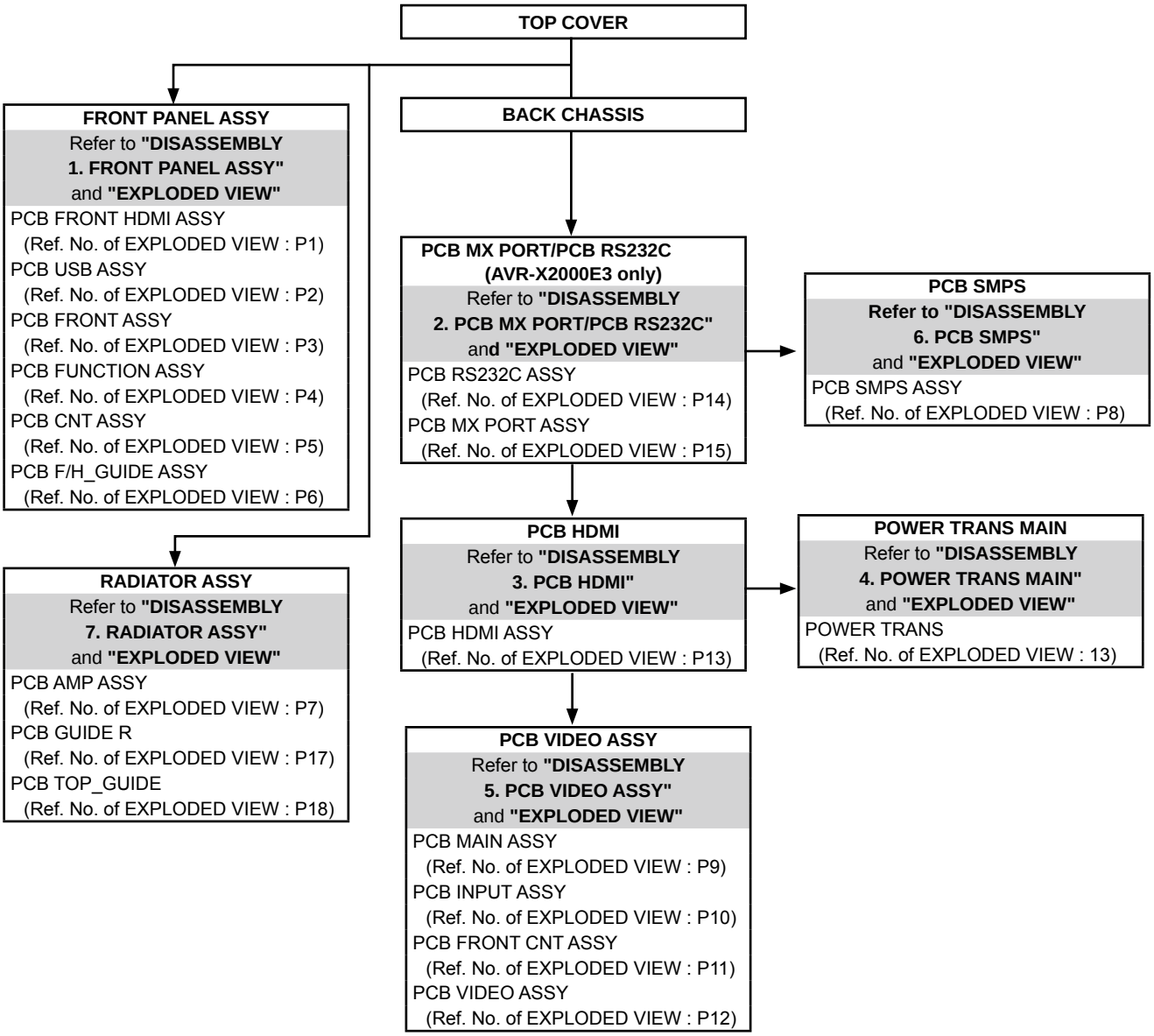

## About the photos used for "descriptions of the DISASSEMBLY" section

- The shooting direction of each photograph used herein is indicated on the left side of the respective photograph as "Shooting direction: ***".
- Refer to the diagram below about the shooting direction of each photograph.
- Photographs with no shooting direction indicated were taken from the top of the set.
- The photograph is AVR-E400 E3 model.

### The viewpoint of each photograph (Shooting direction)

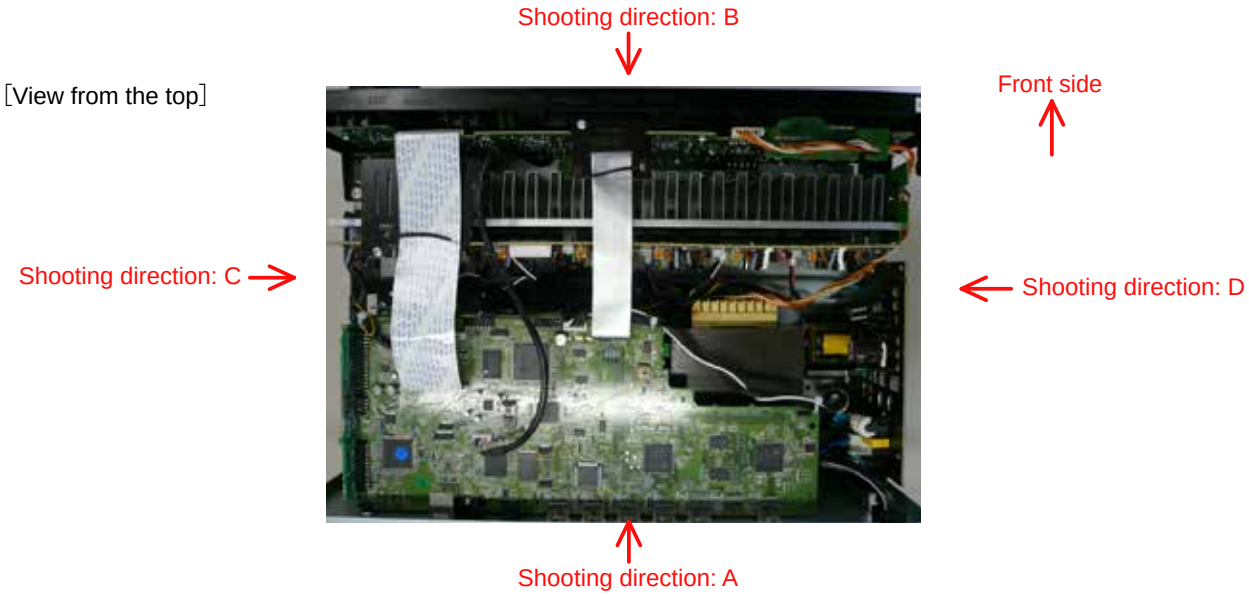

# 1. FRONT PANEL ASSY

**Cautions when replacing the FRONT PANEL (Only AVR-X2000E3)**⚠

Depending on when the model was manufactured, there may be washers in the FRONT PANEL screw positions. Washers are not used in the replacement FRONT PANEL.If you are replacing a FRONT PANEL that has washers, discard the washers.

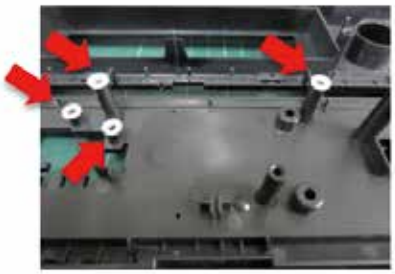

This caution does not apply to models that are not originally fitted with washers.

**Proceeding :** TOP COVER → **FRONT PANEL ASSY**

(1) Remove the screws.

View from the bottom

(2) Disconnect the connector wires and FFC. Remove the screws.

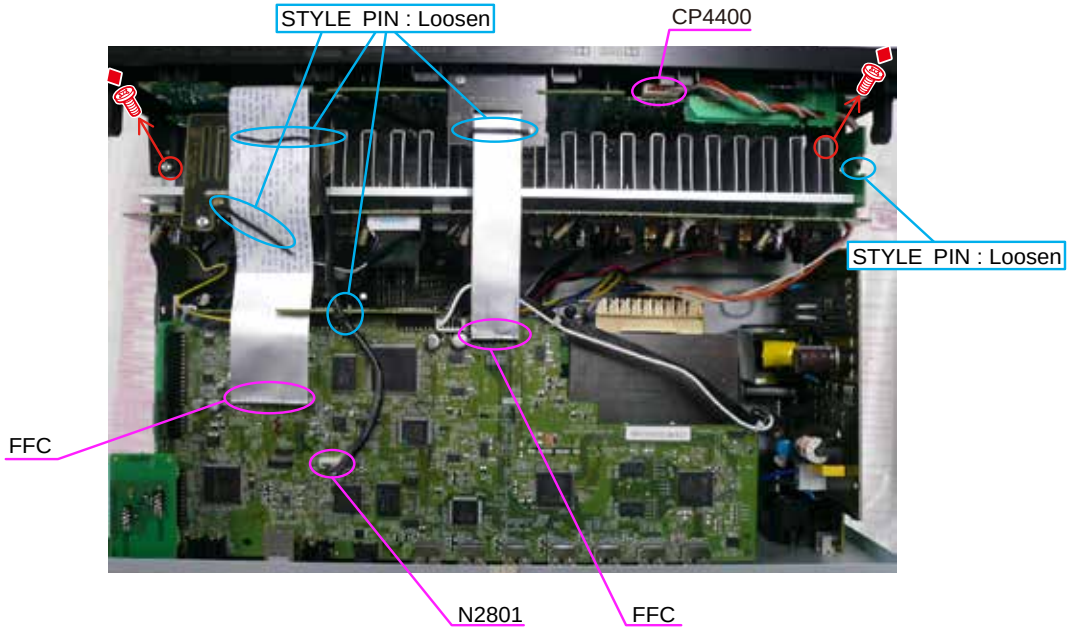


Please refer to "EXPLODED VIEW" for the disassembly method of each P.W.B included in FRONT PANEL ASSY.

## 2. PCB MX PORT/PCB RS232C (AVR-X2000E3 only)

**Proceeding :** TOP COVER → BACK CHASSIS → PCB RS232_CNT(AVR-X2000E3 only) → PCB RS232C(AVR-X2000E3 only)

(1) Remove the screws.

Shooting of photograph: A

(2) Disconnect the connector board.

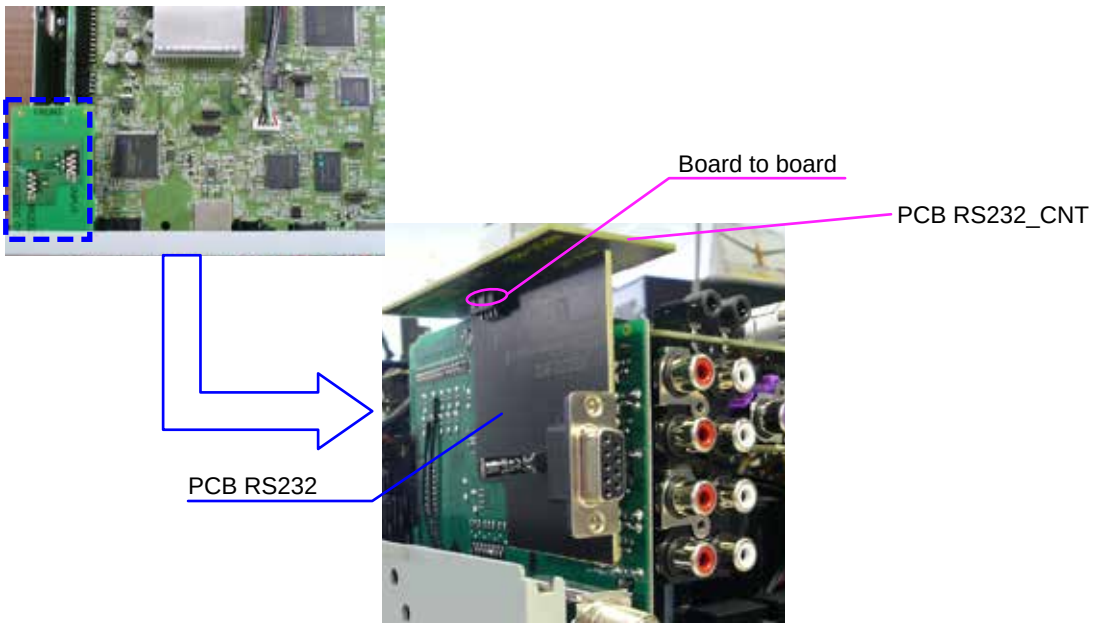


Please refer to "EXPLODED VIEW" for the disassembly method of PCB RS232_CNT/PCB RS232.

## 3. PCB HDMI

**Proceeding :** TOP COVER → BACK CHASSIS → PCB HDMI

(1) Remove the screws.

Shooting of photograph: A

(2) Cut the wire clamp band, then disconnect the connector wires and FFC. Disconnect the connector board.

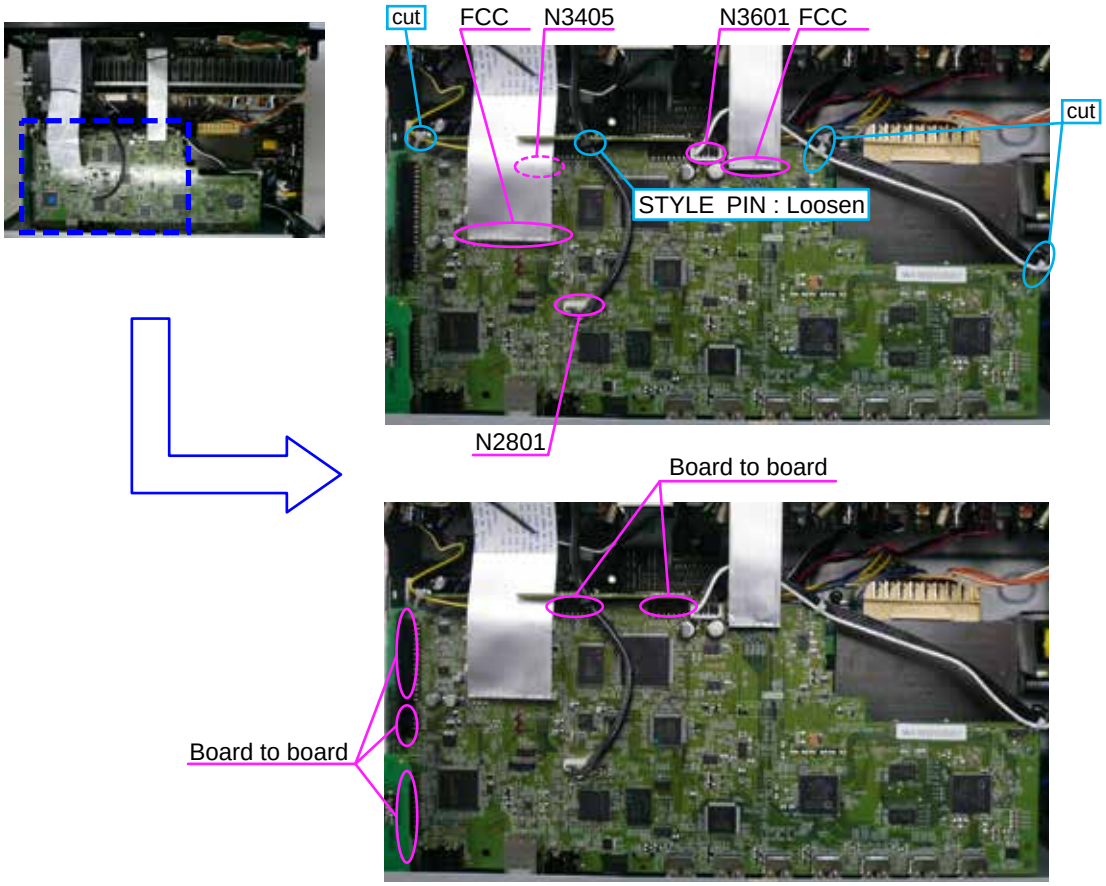

## 4. POWER TRANS MAIN

**Proceeding :** TOP COVER → BACK CHASSIS → PCB HDMI → POWER TRANS MAIN

(1) Disconnect the connector wires, then remove the screws.

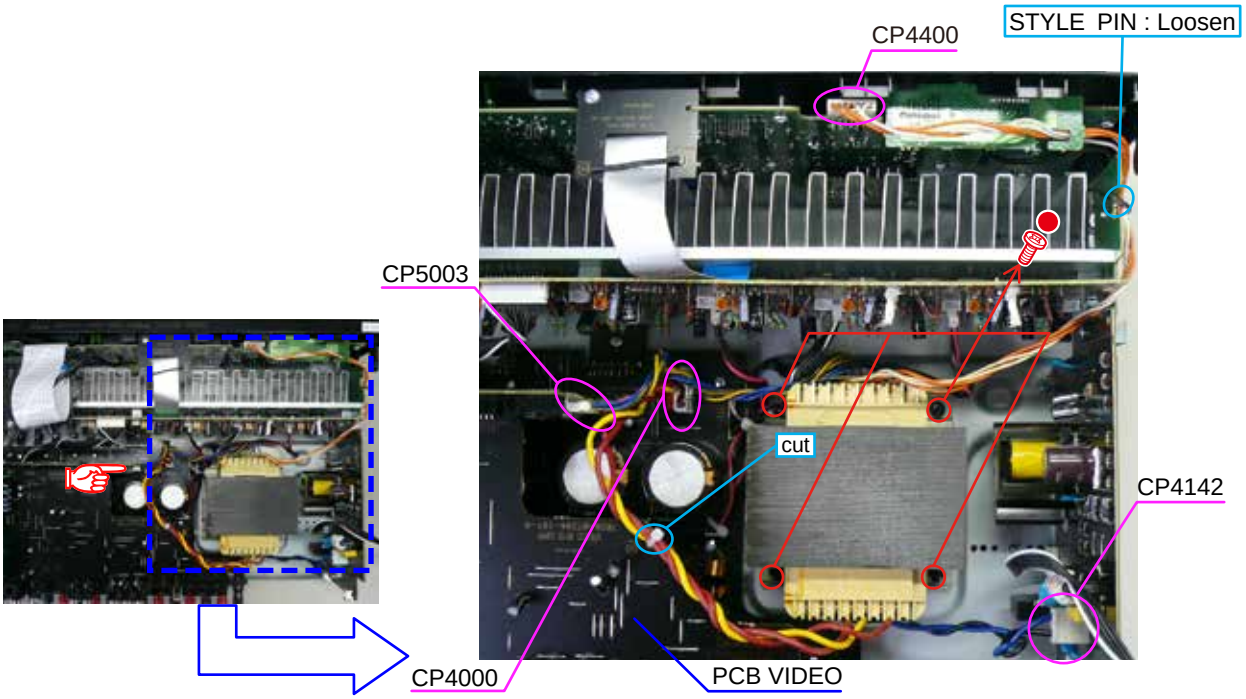


## 5. PCB VIDEO ASSY

**Proceeding :** TOP COVER → BACK CHASSIS → PCB HDMI → PCB VIDEO ASSY → PCB INPUT ASSY

(1) Disconnect the connector board.

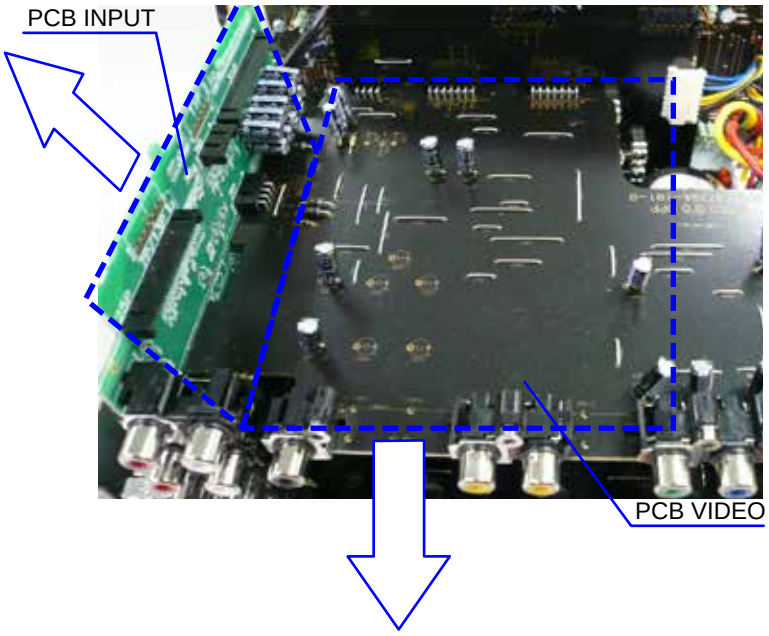


Please refer to "EXPLODED VIEW" for the disassembly method of each PCB.

## 6. PCB SMPS

**Proceeding :** TOP COVER → BACK CHASSIS → PCB HDMI → PCB VIDEO ASSY → PCB INPUT ASSY → PCB FRONT CNT → PCB MAIN → PCB SMPS

(1) Remove the screws.

View from the bottom

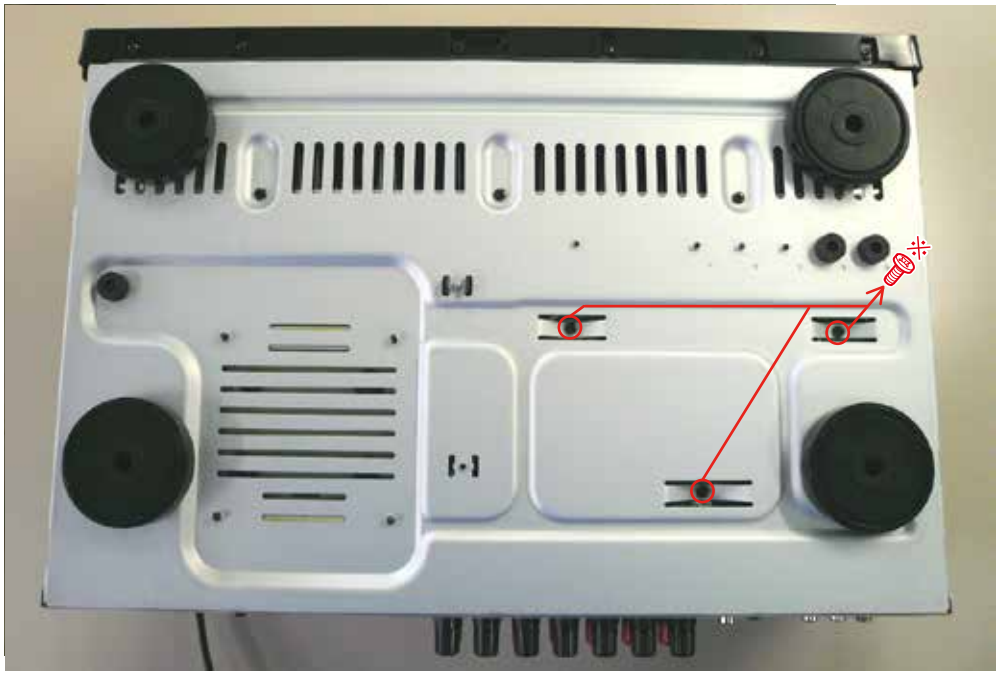

(2) Disconnect the connector wire.

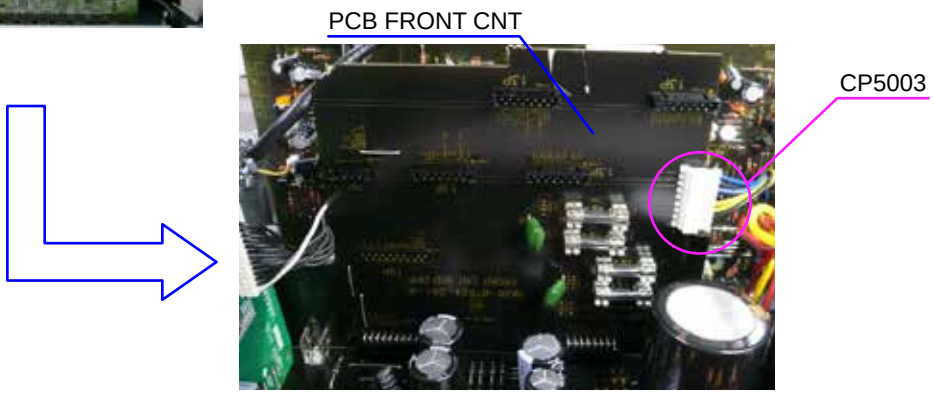

(3) Disconnect the connector wires, then remove the screws.

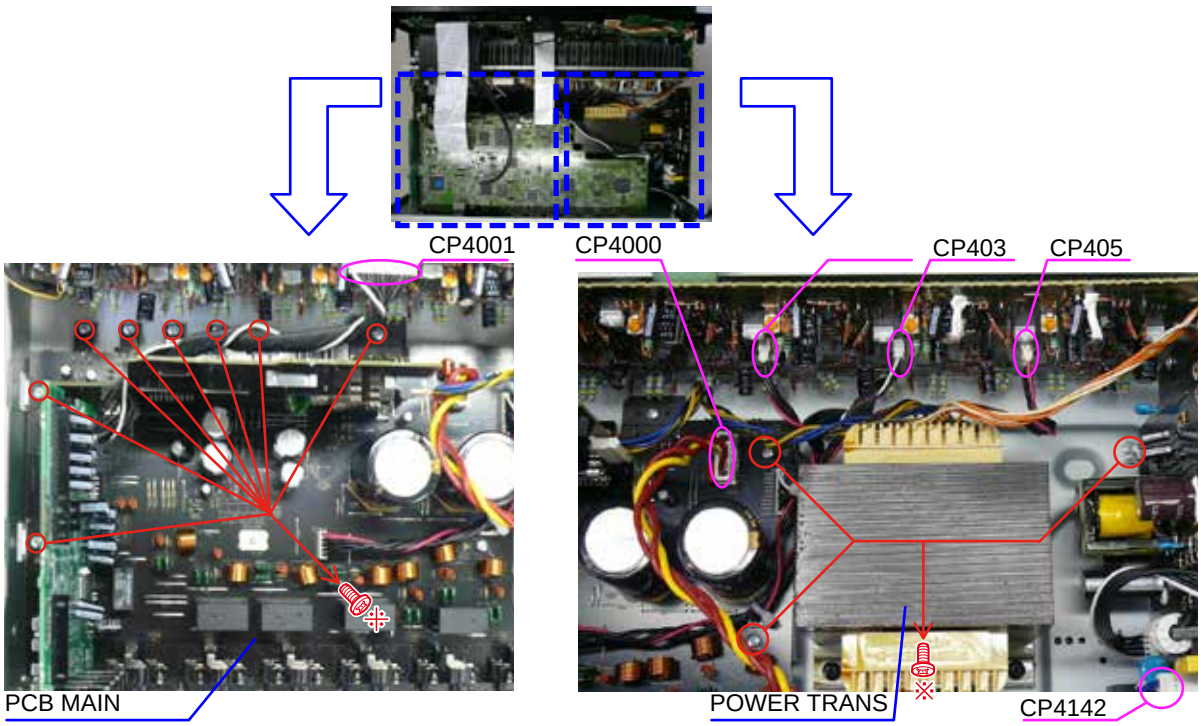


(4) Remove the screw.

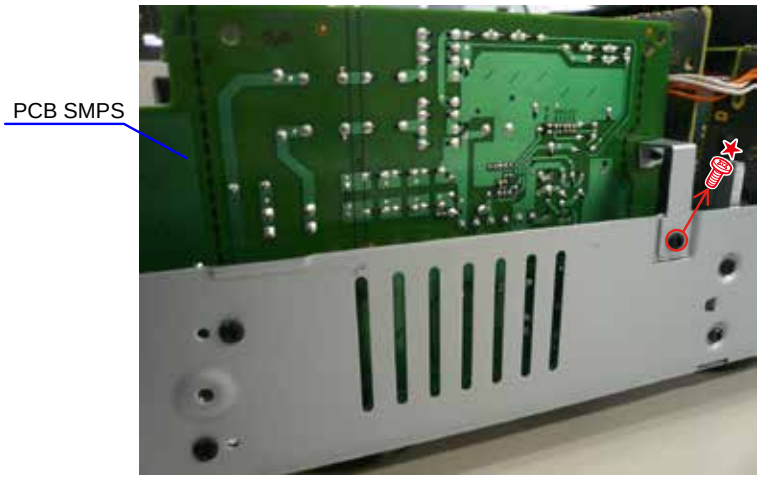


Please refer to "EXPLODED VIEW" for the disassembly method of each PCB.

## 7. RADIATOR ASSY

**Proceeding :** TOP COVER → RADIATOR ASSY

(1) Remove the screws.

View from the bottom

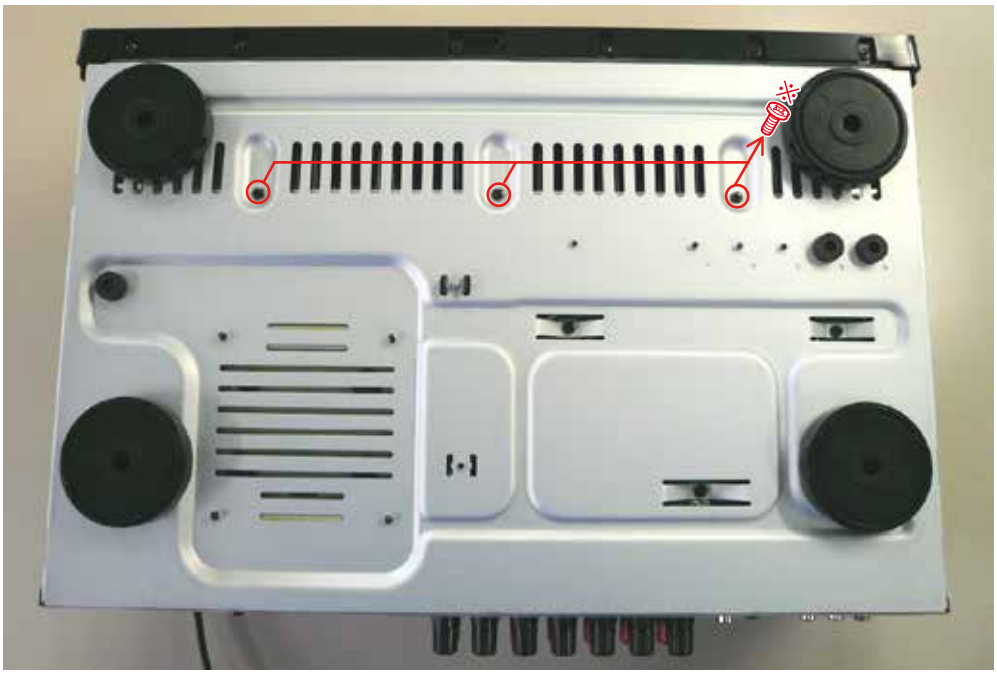

(2) Cut the wire clamp band, then disconnect the connector wires and FFC.

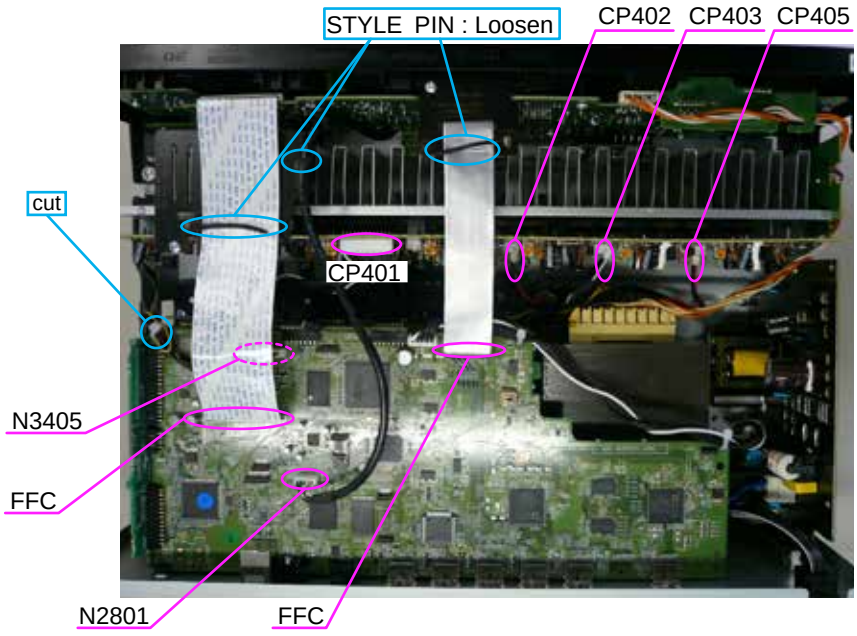

(3) Remove the screws.

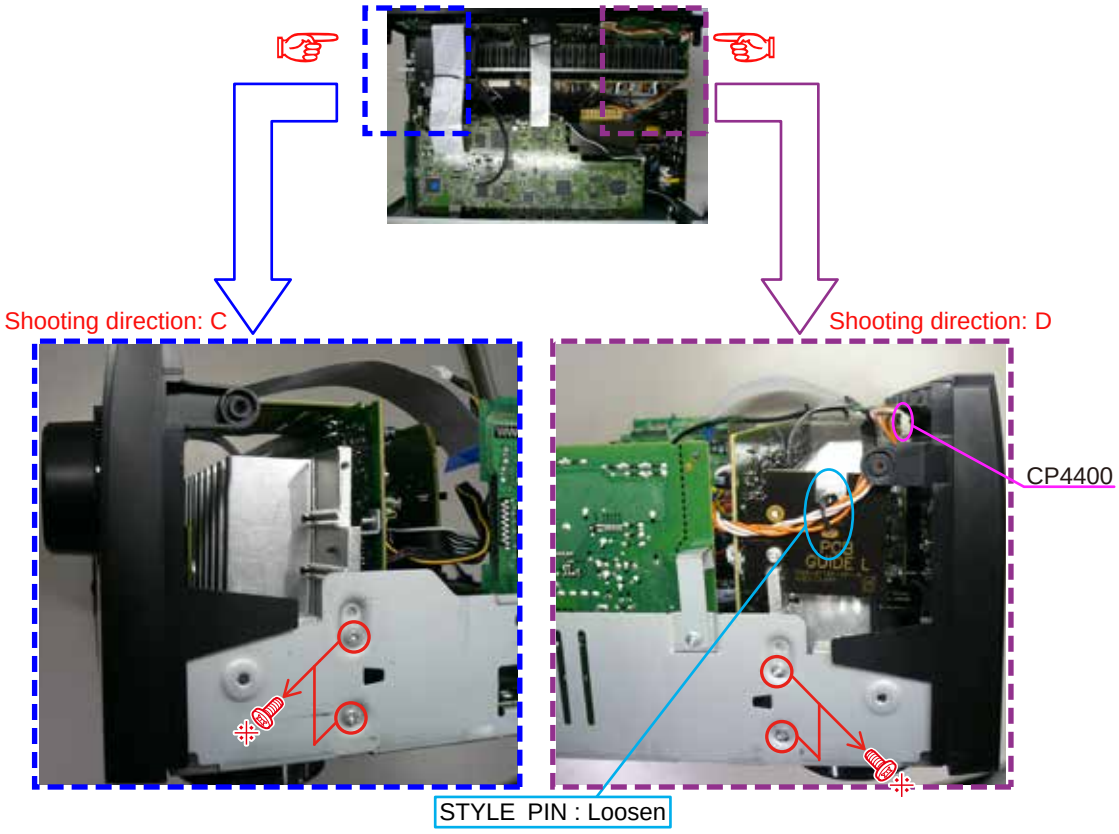


Please refer to "EXPLODED VIEW" for the disassembly method of each PCB included in RADIATOR ASSY.

# SPECIAL MODE

## Special mode setting button (for E400E3 model)

※ No.1 - 5 , 7 : Press the "Power operation (⏻)" button to turn on the power while pressing both the buttons A, B and the button C at the same time.

※ No.6 , 8 : Turn on the power, then press and hold down the A and B buttons for over 3 seconds.

※ No.9 : Turn on the power, then press and hold down the A and B buttons for over 10 seconds.

| No. | Mode | Button A | Button B | Button C | Contents |
|---|---|---|---|---|---|
| 1 | Version display<br>(µcom/DSP Error Display) | STATUS | DIMMER | – | Firmware versions such as Main or DSP are displayed in the FL Display. Errors are displayed when they occur. (Refer to 24 page) |
| 2 | User Initialization mode<br>(Installer Setup settings are not initialized.) | SOURCE SELECT ► | SOURCE SELECT ◄ | – | Backup data initialization is carried out.<br>(Installer Setup settings are not initialized.) |
| 3 | Factory Initialization mode<br>(Installer Setup settings are also initialized.) | ZONE2 SOURCE | DIMMER | – | Backup data initialization is carried out.<br>(Installer Setup settings are also initialized.) |
| 4 | PANEL/REMOTE LOCK Selection mode | ZONE2 SOURCE | SOURCE SELECT ► | – | Selects to reject operations through panel buttons and the master volume knob on the main unit and operations via the remote control. |
| 5 | Service Related Selection mode | ZONE2 SOURCE | DIMMER | STATUS | Selects the “Diagnostic mode” or “Displaying the protection history mode”. |
| 6 | Remote ID Setup mode | STATUS | DIMMER | – | When using multiple DENON AV receivers in the same room, make this setting so that only the desired AV receiver operates. (Refer to 50 page) |
| 7 | Protection pass mode | SOURCE SELECT ◄ | STATUS | ZONE2 SOURCE | Turns the power on with the Protection detection disabled. |
| 8 | DM860A Reboot mode | SOURCE SELECT ► | SOURCE SELECT ◄ | | Restarts DM860. |
| 9 | NETWORK Initialization mode | ZONE2 SOURCE | DIMMER | – | Initializes NETWORK related settings. |

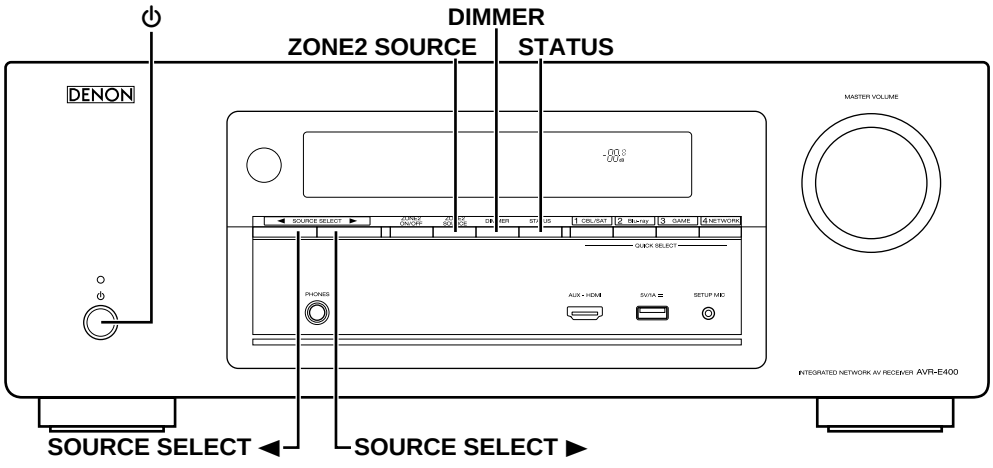

## Special mode setting button (for X2000 model)

※ No.1 - 5, 7 - 9 :Press the "Power operation (⏻)" button to turn on the power while pressing both the buttons A, B and the button C at the same time.

※ No.6 ,10 : Turn on the power, then press and hold down the A and B buttons for over 3 seconds.

※ No.11 : Turn on the power, then press and hold down the A and B buttons for over 10 seconds.

| No. | Mode | Button A | Button B | Button C | Contents |
|---|---|---|---|---|---|
| 1 | Version display<br>(µcom/DSP Error Display) | STATUS | DIMMER | – | Firmware versions such as Main or DSP are displayed in the FL Display. Errors are displayed when they occur. (Refer to 24 page) |
| 2 | User Initialization mode<br>(Installer Setup settings are not initialized.) | TUNER PRESET CH + | TUNER PRESET CH – | – | Backup data initialization is carried out.<br>(Installer Setup settings are not initialized.) |
| 3 | Factory Initialization mode<br>(Installer Setup settings are also initialized.) | ZONE2 SOURCE | DIMMER | – | Backup data initialization is carried out.<br>(Installer Setup settings are also initialized.) |
| 4 | PANEL/REMOTE LOCK Selection mode | ZONE2 SOURCE | TUNER PRESET CH + | – | Selects to reject operations through panel buttons and the master volume knob on the main unit and operations via the remote control. |
| 5 | Service Related Selection mode | ZONE2 SOURCE | DIMMER | STATUS | Selects the “Diagnostic mode” or “Displaying the protection history mode”. |
| 6 | Remote ID Setup mode | STATUS | DIMMER | – | When using multiple DENON AV receivers in the same room, make this setting so that only the desired AV receiver operates. (Refer to 50 page) |
| 7 | Mode for switching tuner frequency step<br>(E2 model Only) | TUNER PRESET CH + | DIMMER | – | Change tuner frequency step to FM:50kHz/200kHz |
| 8 | Installer Setup mode<br>(AVR-X2000E3 model only) | ZONE2 SOURCE | TUNER PRESET CH - | – | Access the Remote Maintenance mode via the internet.Installer Setup is displayed on GUI/Option Menu.<br>b Refer to AVR_RemoteMaintenance_.pdf of SDI. |
| 9 | Protection pass mode | ZONE2 SOURCE | STATUS | TUNER PRESET CH – | Turns the power on with the Protection detection disabled. |
| 10 | DM860A Reboot mode | TUNER PRESET CH + | TUNER PRESET CH – | | Restarts DM860. |
| 11 | NETWORK Initialization mode | ZONE2 SOURCE | DIMMER | – | Initializes NETWORK related settings. |

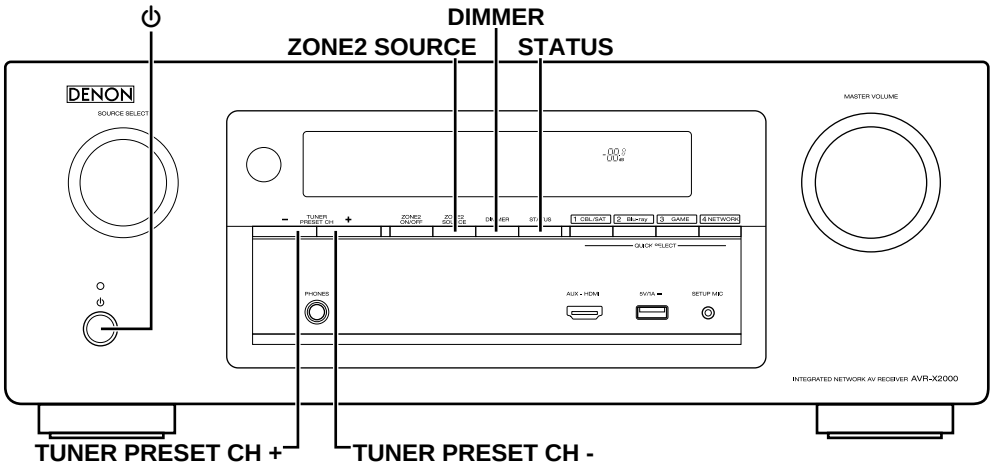

# 1. µcom/DSP Version display mode

## 1.1. Operation specifications

**µcom/DSP version display mode:**
When the set is started up in this mode, the version information is displayed.

**Starting up:**
Press the "Power operation (⏻)" button to turn on the power while pressing the **"STATUS"** and **"DIMMER"** buttons.
Now, press the **"STATUS"** button to the display the 2nd item information on the FL Display.
※ When the version is displayed on the FL Display, the version list is also displayed on the GUI.

## 1.2. Display Order

Error information(Refer to **1.3. Error display**) → ① Model destination information → ② Firmware Package Version → ③ Main µ-com → ④ Main 1st Boot Loader → ⑤ DSP ROM → ⑥ Audio PLD → ⑦ GUI SFLASH → ⑧ Ethernet(DM860A) 1st Boot Loader, Hardware ID → ⑨ Ethernet(DM860A) 2nd Boot Loader, Rhapsody Flag → ⑩ Ethernet(DM860A) IMAGE → ⑪ Ethernet(DM860A)MAC ADDRESS information

① Model destination information :

| Model | FLD |
|---|---|
| AVR-E400 E3 model | AVR-E400_E3 |
| AVR-X2000CI E3 model | AVR-x2000_E3 |
| AVR-X2000 E2 model | AVR-x2000_E2 |
| AVR-X2000 E1C model | AVR-x2000_E1C |

② Firmware Package Version :

| FLD | Package: **** |
|---|---|

③ Main µ-com :

| FLD | Main: ******** |
|---|---|

④ Main 1st Boot Loader :

| FLD | Main FBL: **.** |
|---|---|

⑤ DSP ROM :

| FLD | DSP: **.** |
|---|---|

⑥ Audio PLD :

| FLD | Audio PLD: **.** |
|---|---|

⑦ GUI SFLASH :

| Model | FLD |
|---|---|
| AVR-E400 E3 model | GUI: 6418**** |
| AVR-X2000CI E3 model | GUI: 6411**** |
| AVR-X2000 E2 model | GUI: 6412**** |
| AVR-X2000 E1C model | GUI: 6415**** |

⑧ Ethernet(DM860A) 1st Boot Loader, Hardware ID :

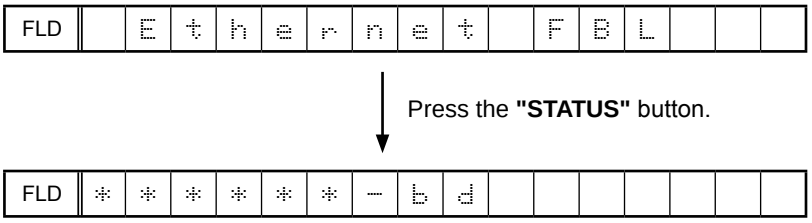


⑨ Ethernet(DM860A) 2nd Boot Loader, Rhapsody Flag :

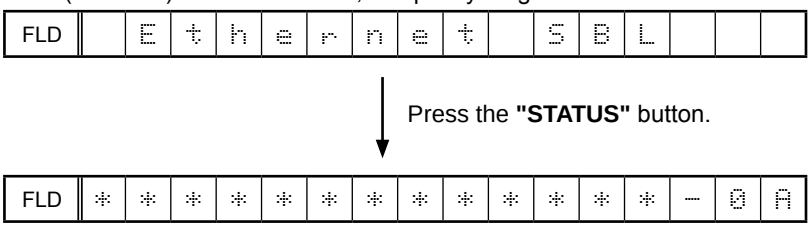


⑩ Ethernet(DM860A) IMAGE :

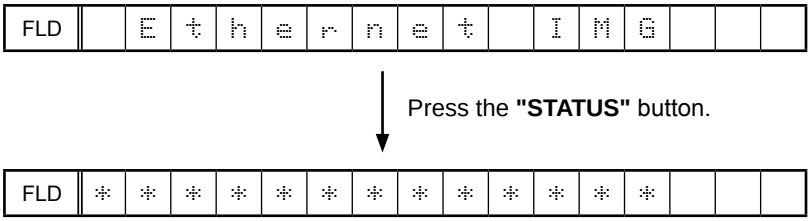


⑪ Ethernet(DM860A)MAC ADDRESS information :

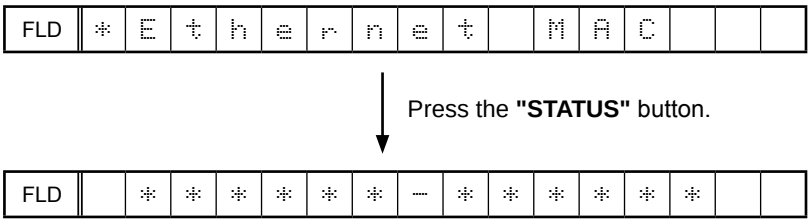

## 1.3. Error display

See the following table for each "Error information" display and its explanation (status).
Display order is ①,②,③,④,⑤.

| Condition | Status | FL Display | Trouble shooting |
|---|---|---|---|
| ①<br>Firm Check NG | Compared with the destination setting on the board. This is displayed when the model name or destination information written into the firmware does not match. (※) | FIRM ERROR | •Please check the destination-resistors (R3017/R3018, HDMI B'D).<br>•Please write the firmware of correct destination. |
| ②<br>DIR NG | No response from DIR. | DIR ERROR 01 | •Please check DIR(U2203, HDMI B'D) and around circuits. |
| ③<br>DSP NG | When DSP code boot is performed, the DSP FLAG0 port does not change to "H" even if DSP reset is executed. | DSP ERROR 01 | •Please check DSP(U2001, HDMI B'D) and around circuits. |
| | Before DSP command is issued, the DSP BUSY port does not change to "L". | DSP ERROR 02 | |
| | When DSP data read is performed, executing WRITE="L" does not result in ACK="H". | DSP ERROR 03 | |
| | When DSP data read is performed, executing REQ="L" does not result in ACK="L". | DSP ERROR 04 | |
| | When DSP data writing is performed, executing WRITE="H" does not result in ACK="H". | DSP ERROR 05 | |
| | When DSP data writing is performed, executing REQ="L" does not result in ACK="L". | DSP ERROR 06 | |
| ④<br>IP SCALER NG | An error occurred in testing writing data between IP SCALER and DRR. | IP SCALER ERR 01 | •Please check IP SCALER (U1601, HDMI B'D) and DDR2(U1801/1802) and around circuits. |
| | Testing writing data between IP SCALER and DRR resulted in no response. | IP SCALER ERR 02 | |
| ⑤<br>EEPROM NG | Error occurs in EEPROM checksum.(*** is a block address number.) | E2PROM ERR*** | |

| Status | FL Display |
|---|---|
| ※<br>The written Firmware and product settings (model name, brand name, destination) are compared. If Firmware that is not designed for this product is written, ▲ or ▼ is displayed in the first column, as shown on the right. | ▲Main :******** |
| | ▲DSP :**.** |
| | ▲Audio PLD:**.** |
| | ▲GUI :******** |
| | ▼GUI :******** |

## 1.4. Version display on the Setup Menu

Use the following procedure to display the firmware version.

(1) Press the **"SETUP"** button on the remote control.
(2) Select "General-Information-Firmware".
A version with 12 digits is displayed as shown in the following image.

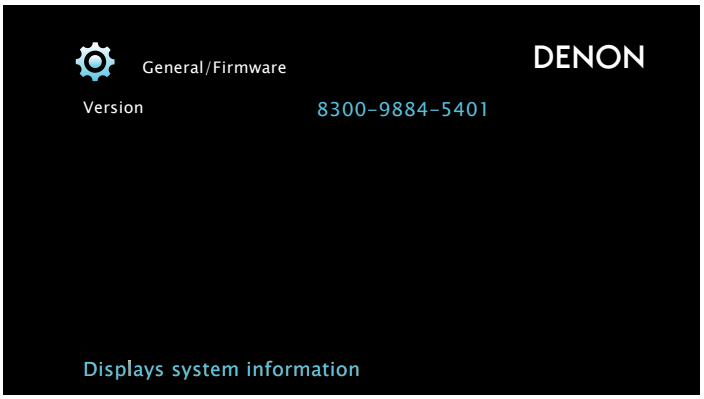


GUI Image

The displayed 12 digits are derived from each device version as shown below.

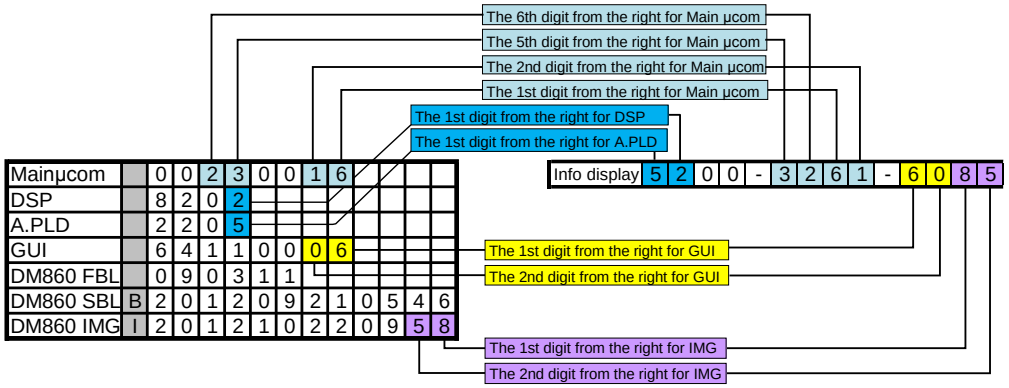


※ This firmware version No. (xxxx-xxxx-xxxx) is included in the service contact document.
These 12 digits are also included in the document.

# 2. PANEL/REMOTE LOCK Selection mode

## 2.1. Behavior specifications

In this mode, you can switch between the PANEL LOCK MODE and the Mode for preventing remote control acceptance.

## 2.2. Starting up

Press the "Power operation (⏻)" button to turn on power while pressing the **"ZONE2 SOURCE"** and **"TUNER PRESET CH +"** buttons.
Press the **"TUNER PRESET CH +"** button (**"SOURCE SELECT ►"** button for AVR-E400) to select the mode and the **"STATUS"** button to confirm the selection.

## 2.3. Mode selection method and how each mode is displayed

Each time you press the **"TUNER PRESET CH +"** (**"SOURCE SELECT ►"** button for AVR-E400) button, the mode displayed on the FL DISPLAY changes.
While the desired mode name is displayed on the FL DISPLAY, press the **"STATUS"** button. The set is restarted and the selected mode takes effect.
The currently set item is marked with "※".

①

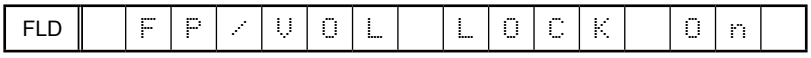


Operations using the main unit panel buttons and the master volume knob are rejected.

②

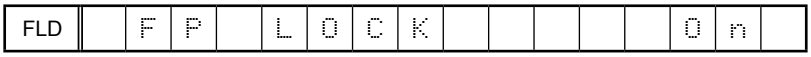


Operations using the main unit panel buttons are rejected.

③

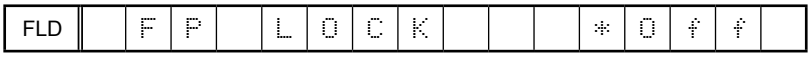


Panel lock mode is cancelled.

④

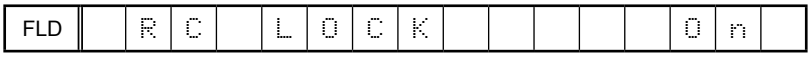


Operations using the remote control are rejected.

⑤

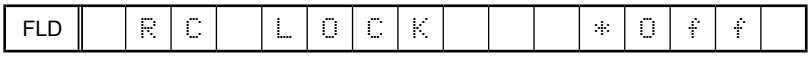


RC lock mode is cancelled.

# 3. Service Related Selection mode

## 3.1. Behavior specifications

In this mode, you can switch between the Diagnostic mode (SERVICE CHECK), the Displaying the protection mode (PROTECTION) and the 232C clear mode (RS232C RESET).

## 3.2. Starting up

Press the "Power operation (⏻)" button to turn on power while pressing the **"ZONE2 SOURCE"**, **"DIMMER"** and **"STATUS"** buttons.
Press the **"TUNER PRESET CH +"** button (**"SOURCE SELECT"** button for AVR-E400) to select the mode and press the **"STATUS"** button to restart the set and make the setting take effect.

①

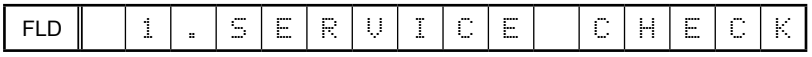


This mode is used for confirming the Video and Audio (signal) paths. (Diagnostic mode)The signal paths of the set can be easily confirmed after repair.

②

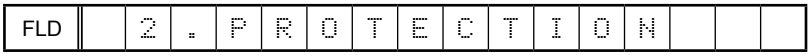


The protection history can be checked.

③ AVR-X2000E3 Only

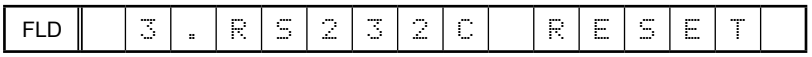


The 232C standby mode is changed to the Normal standby mode.

④

The operation information about the set can be checked.

## 3.3. Canceling diagnostic mode

Turn off the power by pressing the "Power operation (⏻)" button.

## 3.4. DIAGNOSTIC MODE (Video/Audio (signal) path confirmation mode

### 3.4.1. Specification

This mode is used for confirming the Video and Audio (signal) paths. (Troubleshooting)
Confirming the operation of unit can be easily done after repair.
Backup data will not be lost.

### 3.4.2. Starting diagnostic mode

Press the "Power operation (⏻)" button to turn on power while pressing the "ZONE2 SOURCE" and "DIMMER" and "STATUS" buttons.
Select "1. SERVICE CHECK" and press "STATUS" to start the set in the Diagnostic mode.
In this mode, TUNED, STEREO and RDS are lit in FL display.

### 3.4.3. Canceling diagnostic mode

Turn off the power by pressing the "Power operation (⏻)" button.

### 3.4.4 Selecting items

Press ① button to switch between video items and audio items.
Press ② or ③ button to select previous or next items.

| This unit | | | remote controller | | |
|---|---|---|---|---|---|
| ①<br>audio ⇔ video | ②<br>previous | ③<br>next | ①<br>audio ⇔ video | ②<br>previous | ③<br>next |
| DIMMER | QUICK SELECT 1 | QUICK SELECT 2 | SLEEP | CURSOR LEFT | CURSOR RIGHT |

### 3.4.5 Video system confirmation items

fig. XX: Refer to the block diagram of the fig.XXth.

| | Confirmation item | FL display | settings | Contents of confirmationRemarks |
|---|---|---|---|---|
| 1 | video convert<br>(analog or HDMI ⇒ HDMI)<br>**fig.1** | V02:V.CONVERT | Input Source : CBL/SAT<br>Video Convert(IP Scaler) : ON, All sources<br>IP Scaler : "Analog&HDMI", All sources<br>Resolution : "Auto", All sources<br>MAIN ZONE ON<br>ZONE2 OFF | ·CVBS input ⇒ IP Scaler ⇒ HDMI output<br>·Component input ⇒ IP Scaler ⇒ HDMI output<br>·HDMI input ⇒ IP Scaler ⇒ HDMI output<br>·ETHERNET input ⇒ IP Scaler ⇒ HDMI output<br>(* Input source can be switched.) |
| 2 | HDMI pass<br>(Main)<br>**fig.2** | V03:HDMI PASS | Input Source : CBL/SAT<br>Source of Video Convert(IP Scaler) : OFF, All sources<br>MAIN ZONE ON<br>ZONE2 OFF | ·HDMI input ⇒ HDMI output<br>·Front HDMI input ⇒ HDMI output<br>(* Input source can be switched.) |
| 3 | HDMI CEC<br>**fig.3** | V04:HDMI CEC | Input Source : CBL/SAT<br>HDMI Control : ON<br>MAIN ZONE ON<br>ZONE2 OFF | ·When the power supply of a TV is put in the standby mode, make sure that the power supply of this unit is also put in the standby mode.<br>·To check ARC path, switch the input source to "TV AUDIO".<br>(* Input source can be switched.) |
| 4 | HDMI audio<br>(audio: AVR)<br>**fig.4** | V05:H.AUDIO-AVR | Input Source : CBL/SAT<br>HDMI Control : OFF<br>HDMI Audio : AVR | ·HDMI input(PCM , DolbyDigital , DTS) ⇒ Speaker output<br>·HDMI input(HD audio) ⇒ Speaker output<br>(* Input source can be switched.) |
| 5 | HDMI audio<br>(audio: TV)<br>**fig.5** | V06:H.AUDIO-TV | HDMI Audio : TV | ·HDMI input(PCM , DolbyDigital , DTS) ⇒ HDMI output (audio output from connected TV)<br>(* Input source can be switched.) |
| 6 | GUI menu<br>**fig.6** | V07:GUI MENU ON | Input Source : CBL/SAT<br>Video Convert(IP Scaler) : ON, All sources<br>IP Scaler : "Analog&HDMI", All sources<br>Resolution : "AUTO", All sources<br>Setup Menu ON<br>MAIN ZONE ON<br>ZONE2 OFF | ·GUI display ⇒ HDMI output<br>(* Input source can be switched.) |

### 3.4.6 Audio system confirmation items

fig. XX: Refer to the block diagram of the fig.XXth.

| | Confirmation item | FL display | settings | Contents of confirmationRemarks |
|---|---|---|---|---|
| 1 | analog pass **fig.7** | A01:ANALOG PASS | Input Source: CBL/SAT<br>Input Mode: ANALOG(fixed)<br>Sound mode: DIRECT<br>Amp assign: Surround Back<br>MAIN ZONE: ON<br>ZONE2: OFF | ·Analog input ⇒ Speaker output<br>(* Input source can be switched.) |
| 2 | digital **fig.8** | A02:DIGITAL | Input Source : CBL/SAT<br>Input Mode : DIGITAL(fixed)<br>Sound mode: MULTI CH STEREO<br>Amp assign : Surround Back<br>Speaker Config:<br>all Speakers =Small<br>SW=Yes | ·Digital input ⇒ Speaker output<br>(* Input source can be switched.) |
| 3 | digital<br>(ZONE2) **fig.9** | A03:DIGITAL-Z2 | Input Source : NETWORK(fixed)<br>Input Mode : Auto<br>Sound mode: STEREO<br>Amp assign : ZONE2<br>MAIN ZONE: ON<br>ZONE2: ON | ·Digital(PCM) input ⇒ Speaker output<br>(ZONE2 L, R )<br>·Digital(PCM) input ⇒ Preout output<br>(ZONE2 L, R) |
| 4 | HDMI **fig.10** | A05:HDMI | Input Source : CBL/SAT<br>Input Mode : HDMI(fixed)<br>Sound mode: STEREO<br>Amp assign : Surround Back<br>MAIN ZONE: ON<br>ZONE2: OFF | ·HDMI input ⇒ Speaker output<br>(* Input source can be switched.) |
| 5 | analog A/D<br>(MAIN) **fig.11** | A06:AD | Input Source : CBL/SAT<br>Input Mode : Analog(fixed)<br>Sound mode: MULTI CH STEREO<br>Amp assign : Surround Back<br>Speaker Config:<br>all Speaker=Small/ SW=Yes<br>MAIN ZONE: ON | ·Analog input ⇒ Speaker output<br>·Analog input ⇒ Pre OUT (SW)<br>(* Input source can be switched.) |
| 6 | analog amp assign<br>(Amp assign: ZONE2) **fig.12** | A07:ASSIGN-Z2 | Input Source : CBL/SAT<br>Input Mode : Auto<br>Sound mode: STEREO<br>Z2 Source : Source<br>Amp assign : ZONE2<br>MAIN ZONE: ON<br>ZONE2: ON | ·Analog input ⇒ Speaker output<br>·Analog input ⇒ Pre OUT (ZONE2) AVR-X2000 only<br>(* Input source can be switched.) |
| 7 | analog amp assign<br>(amp assign: bi-amp)<br>(AVR-X2000 only) **fig.13** | A11:ASSIGN-Bi AMP | Input Source : CBL/SAT<br>Input Mode : Auto<br>Sound mode: MULTI CH STEREO<br>Amp assign : Bi-Amp<br>MAIN ZONE ON<br>ZONE2 OFF | ·Analog input ⇒ Speaker output<br>(* Input source can be switched.) |
| 8 | front height **fig.14** | A14:FRONT HEIGHT | Input Source : CBL/SAT<br>Input Mode : Auto<br>Sound mode: MULTI CH STEREO<br>Amp assign : Front Height<br>MAIN ZONE ON<br>ZONE2 OFF | ·Analog input ⇒ Speaker output<br>(* Input source can be switched.) |

## BLOCK DIAGRAM

fig1 : analog or HDMI ⇒ HDMI

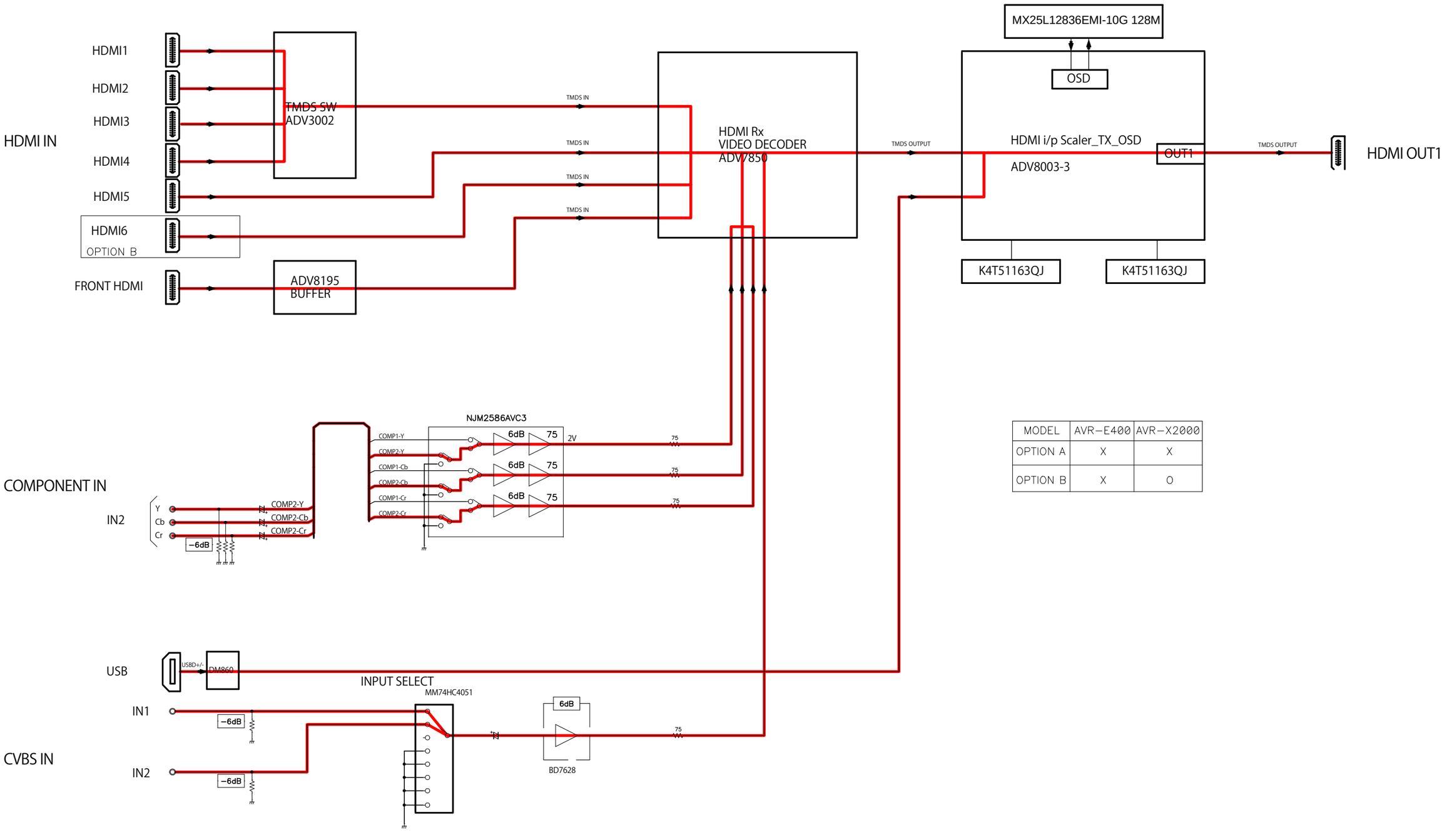


| MODEL | AVR−E400 | AVR−X2000 |
|---|---|---|
| OPTION A | X | X |
| OPTION B | X | O |

# fig2 : HDMI Pass (Main)

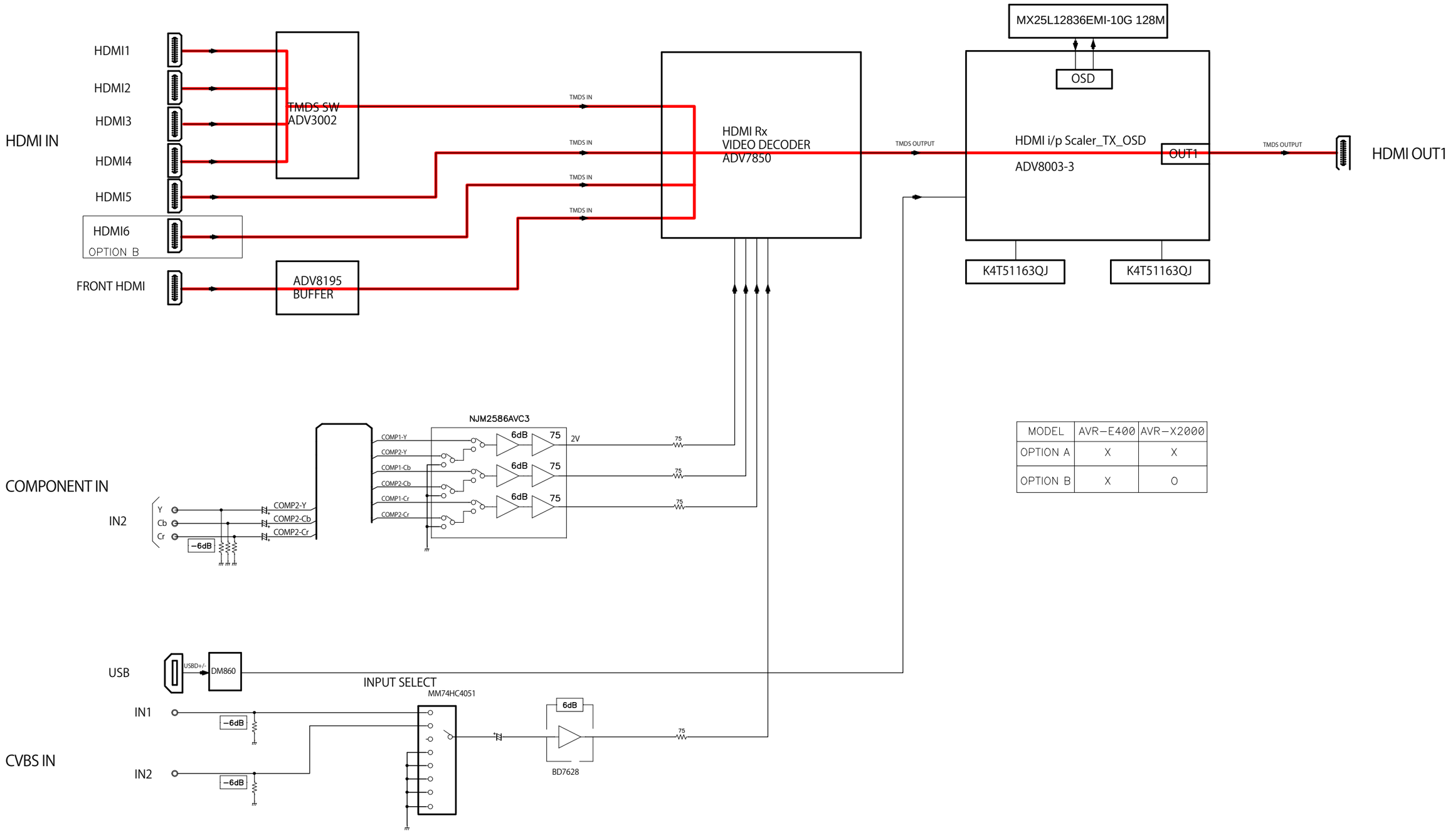


| MODEL | AVR−E400 | AVR−X2000 |
|---|---|---|
| OPTION A | X | X |
| OPTION B | X | O |

# fig3 : HDMI CEC

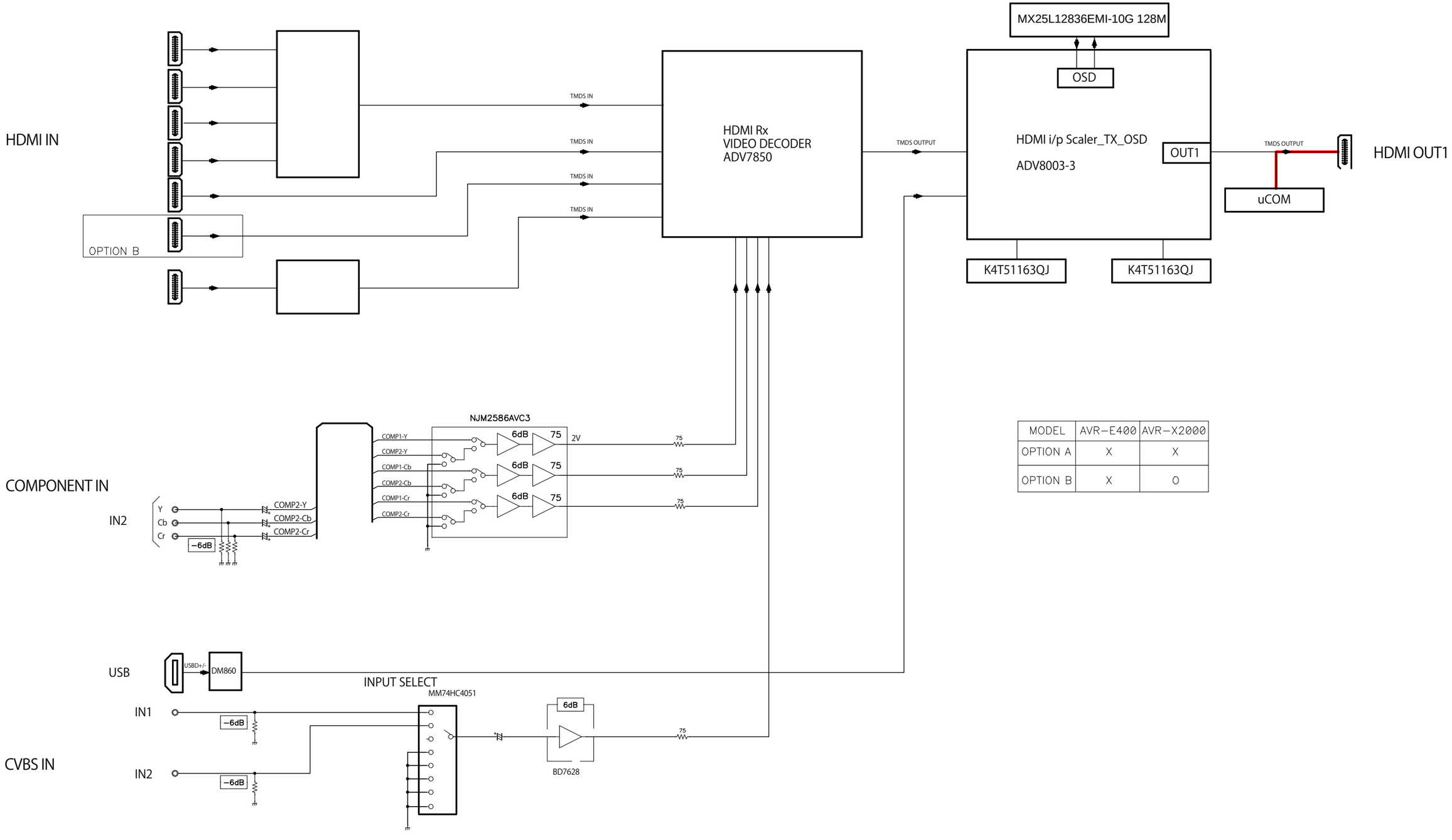


| MODEL | AVR−E400 | AVR−X2000 |
|---|---|---|
| OPTION A | X | X |
| OPTION B | X | O |

# fig4 : HDMI audio (audio: AVR)

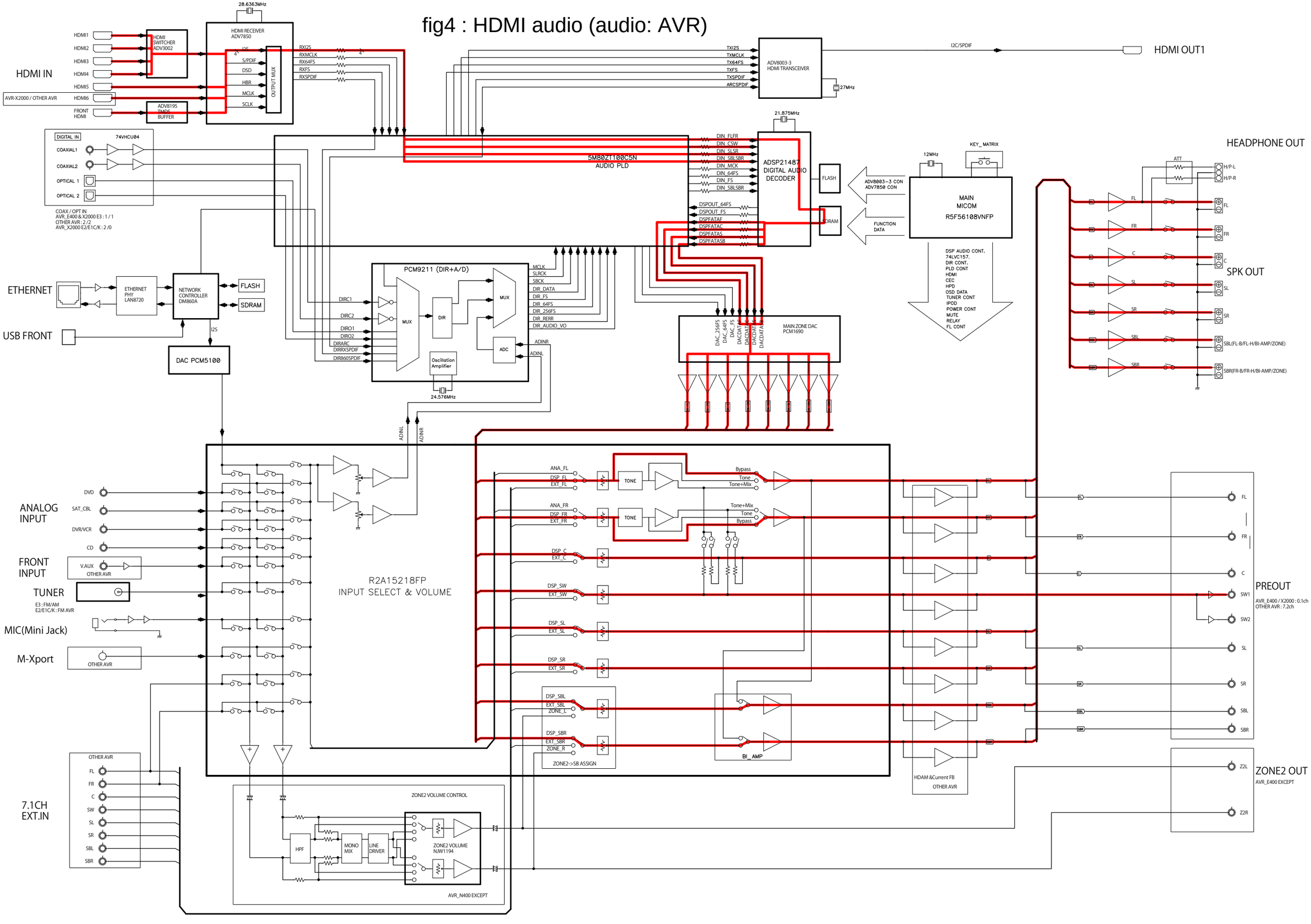

# fig5 : HDMI audio (audio: TV)

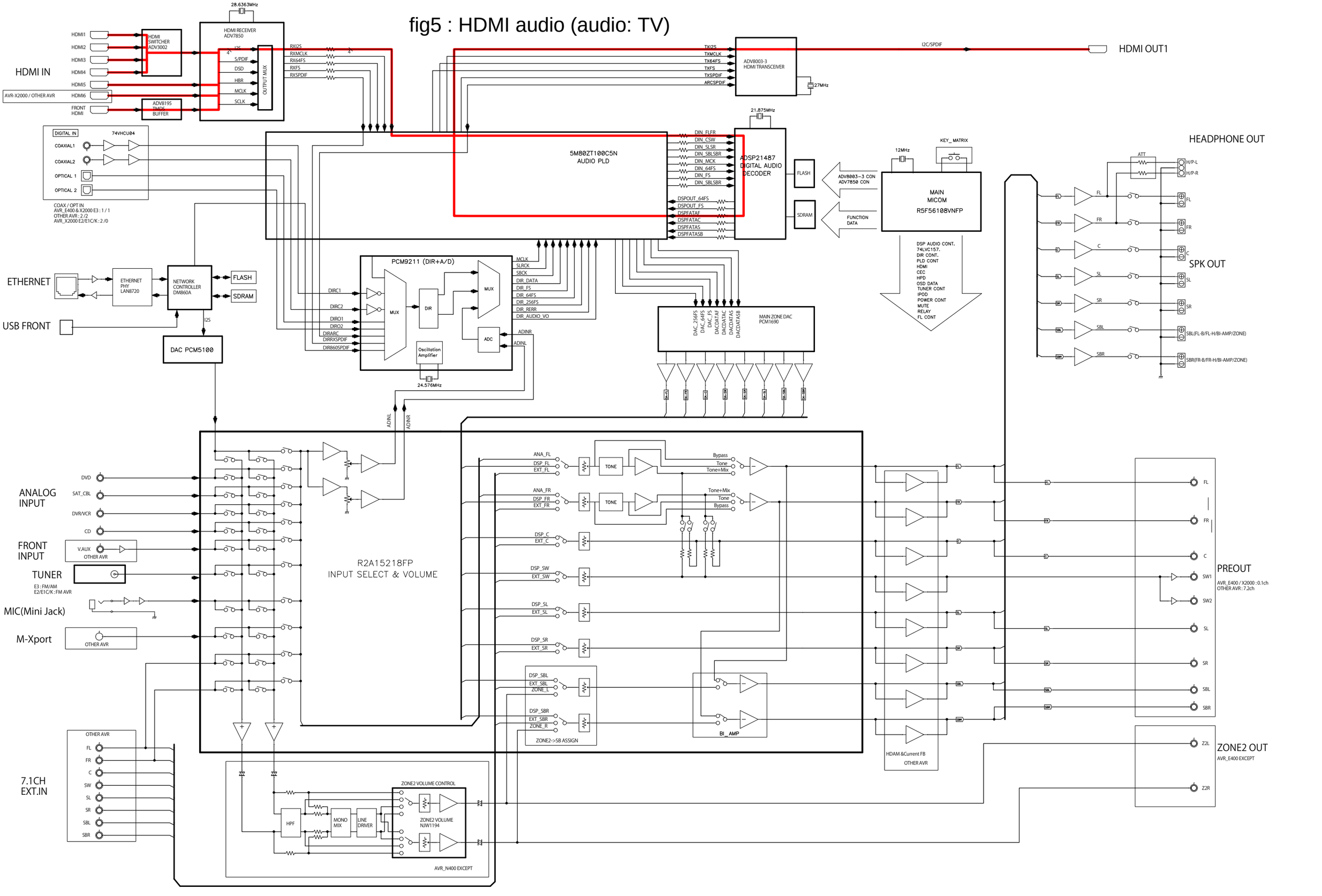

fig6 : GUI menu

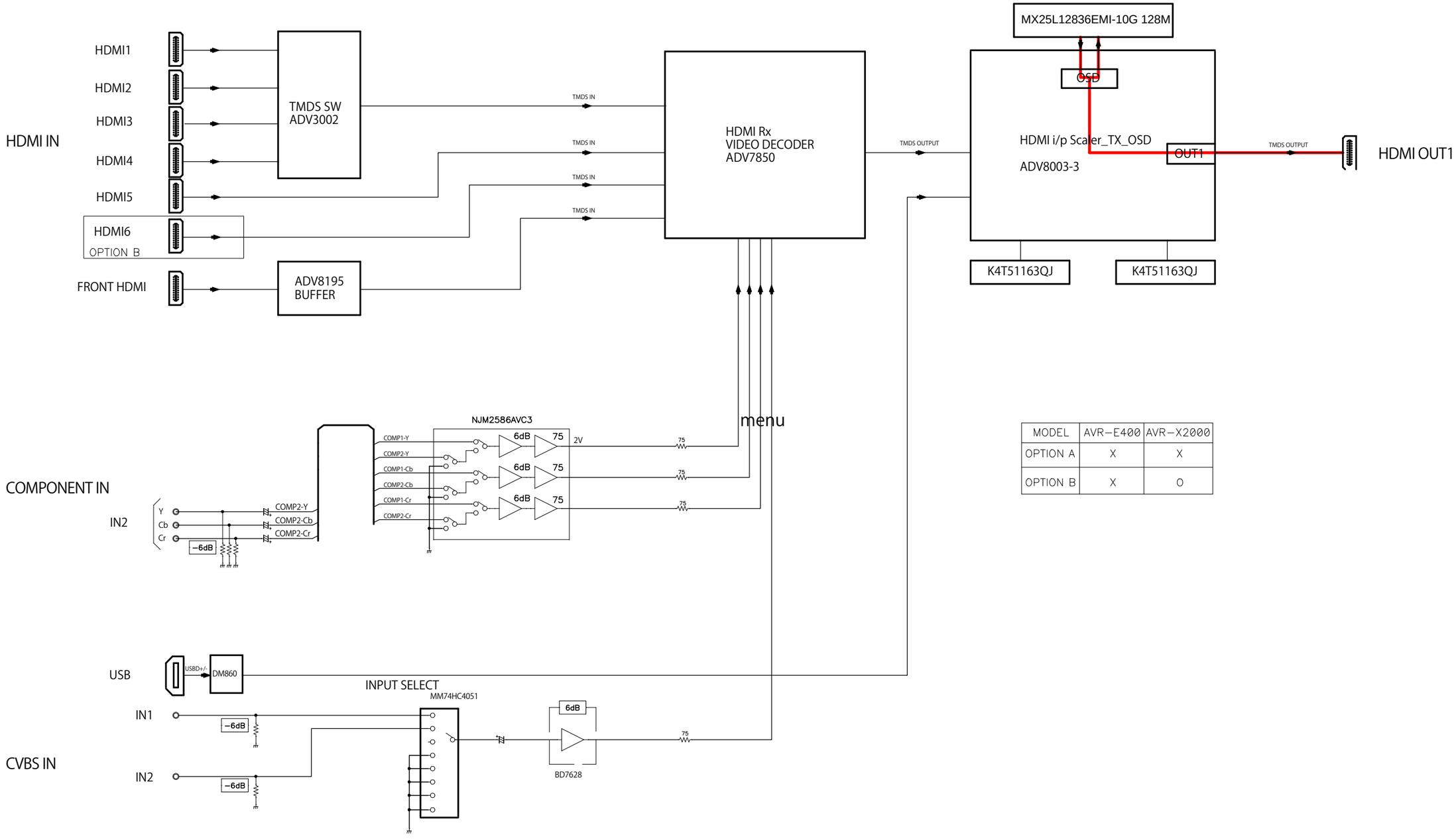


| MODEL | AVR−E400 | AVR−X2000 |
|---|---|---|
| OPTION A | X | X |
| OPTION B | X | O |

# fig7 : Analog (signal) pass

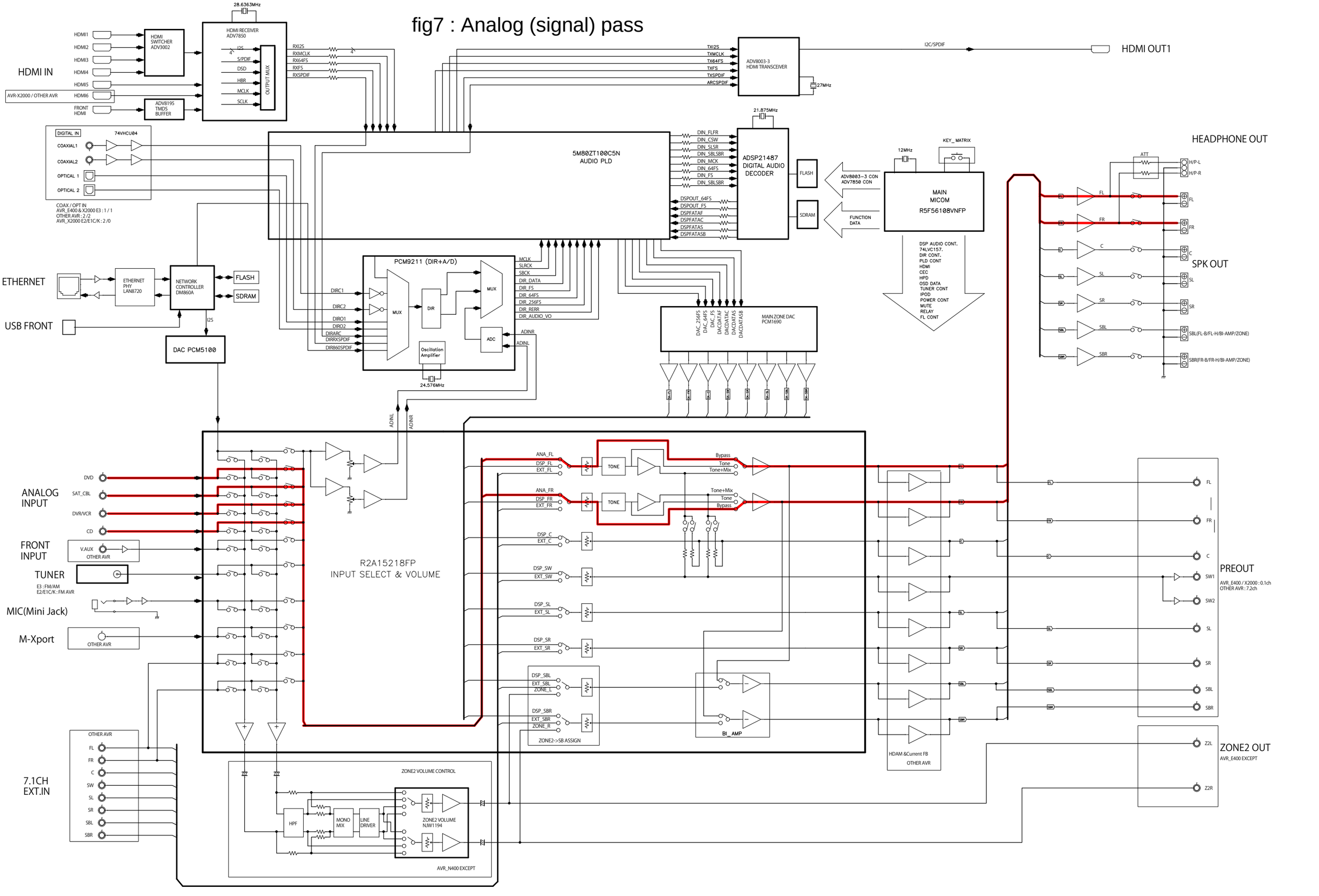

# fig8 : Digital (MAIN)

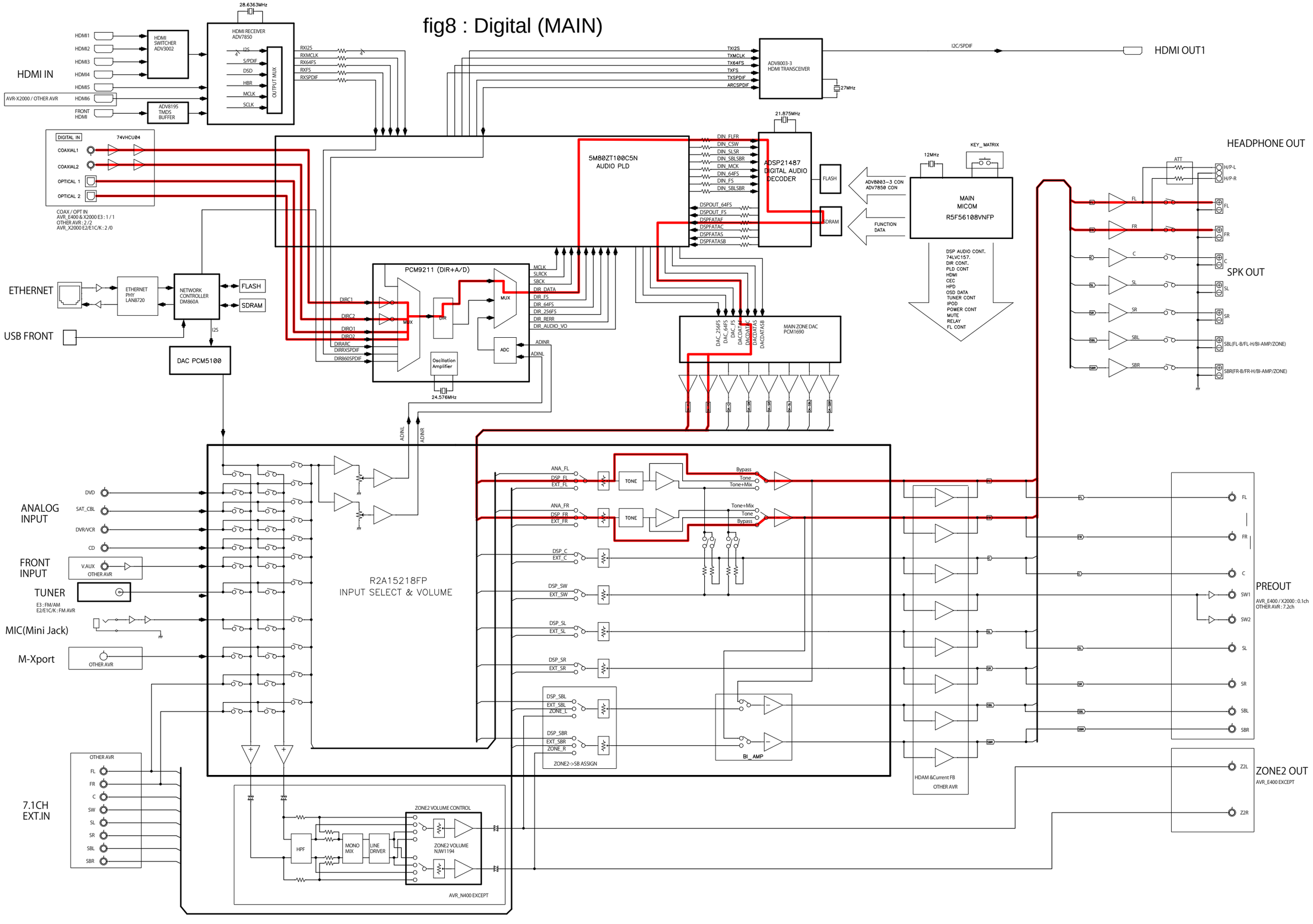

# fig9 : digital (ZONE2)

HDMI IN
HDMI1
HDMI2
HDMI3
HDMI4
HDMI5
AVR-X2000 / OTHER AVR
HDMI6
FRONT HDMI
HDMI SWITCHER ADV3002
ADV8195 TMDS BUFFER
28.6363MHz
HDMI RECEIVER ADV7850
I2S
S/PDIF
DSD
HBR
MCLK
SCLK
OUTPUT MUX
RXI2S
RXMCLK
RX64FS
RXFS
RXSPDIF
TXI2S
TXMCLK
TX64FS
TXFS
TXSPDIF
ARCSPDIF
ADV8003-3 HDMI TRANSCEIVER
27MHz
I2C/SPDIF
HDMI OUT1
DIGITAL IN
74VHCU04
COAXIAL1
COAXIAL2
OPTICAL 1
OPTICAL 2
COAX / OPT IN
AVR_E400 & X2000 E3 : 1 / 1
OTHER AVR : 2 /2
AVR_X2000 E2/E1C/K : 2 /0
5M80ZT100C5N AUDIO PLD
21.875MHz
ADSP21487 DIGITAL AUDIO DECODER
DIN_FLFR
DIN_CSW
DIN_SLSR
DIN_SBLSBR
DIN_MCK
DIN_64FS
DIN_FS
DIN_SBLSBR
DSPOUT_64FS
DSPOUT_FS
DSPFATAF
DSPFATAC
DSPFATAS
DSPFATASB
FLASH
SDRAM
12MHz
KEY_ MATRIX
ADV8003-3 CON
ADV7850 CON
FUNCTION DATA
MAIN MICOM R5F56108VNFP
DSP AUDIO CONT.
74LVC157.
DIR CONT.
PLD CONT
HDMI CEC
HPD
OSD DATA
TUNER CONT
IPOD POWER CONT
MUTE
RELAY
FL CONT
HEADPHONE OUT
ATT
H/P-L
H/P-R
SPK OUT
FL
FR
C
SL
SR
SBL
SBR
SBL(FL-B/FL-H/BI-AMP/ZONE)
SBR(FR-B/FR-H/BI-AMP/ZONE)
ETHERNET
ETHERNET PHY LAN8720
NETWORK CONTROLLER DM860A
FLASH
SDRAM
USB FRONT
I2S
DAC PCM5100
PCM9211 (DIR+A/D)
DIRC1
DIRC2
DIRO1
DIRO2
DIRARC
DIRRXSPDIF
DIR8605PDIF
MUX
DIR
ADC
Oscillation Amplifier
24.576MHz
MCLK
SLRCK
SBCK
DIR_DATA
DIR_FS
DIR_64FS
DIR_256FS
DIR_RERR
DIR_AUDIO_VO
ADINR
ADINL
DAC_256FS
DAC_64FS
DAC_FS
DACDATAF
DACDATAC
DACDATAS
DACDATASB
MAIN ZONE DAC PCM1690
ANALOG INPUT
DVD
SAT_CBL
DVR/VCR
CD
FRONT INPUT
V.AUX
OTHER AVR
TUNER
E3 : FM/AM
E2/E1C/K : FM AVR
MIC(Mini Jack)
M-Xport
OTHER AVR
R2A15218FP
INPUT SELECT & VOLUME
ANA_FL
DSP_FL
EXT_FL
ANA_FR
DSP_FR
EXT_FR
DSP_C
EXT_C
DSP_SW
EXT_SW
DSP_SL
EXT_SL
DSP_SR
EXT_SR
DSP_SBL
EXT_SBL
ZONE_L
DSP_SBR
EXT_SBR
ZONE_R
ZONE2->SB ASSIGN
TONE
Bypass
Tone
Tone+Mix
BI_ AMP
HDAM &Current FB
OTHER AVR
PREOUT
AVR_E400 / X2000 : 0.1ch
OTHER AVR : 7.2ch
SW1
SW2
ZONE2 OUT
AVR_E400 EXCEPT
Z2L
Z2R
7.1CH EXT.IN
OTHER AVR
FL
FR
C
SW
SL
SR
SBL
SBR
ZZ
ZONE2 VOLUME CONTROL
HPF
MONO MIX
LINE DRIVER
ZONE2 VOLUME NJW1194
AVR_N400 EXCEPT

# fig10 : HDMI

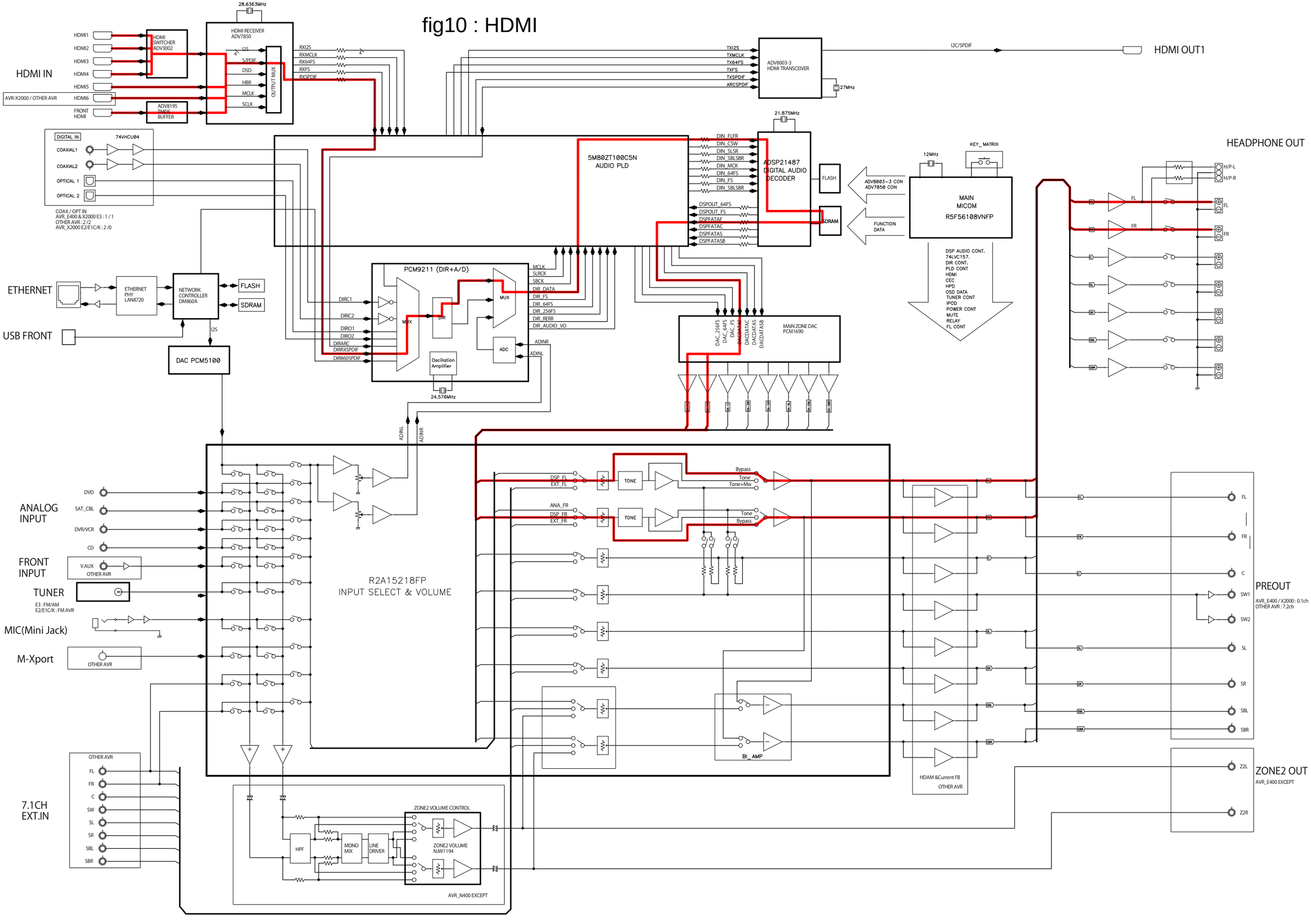
HDMI IN
HDMI1
HDMI2
HDMI3
HDMI4
HDMI5
HDMI6
AVR-X2000 / OTHER AVR
FRONT HDMI
HDMI SWITCHER ADV3002
ADV8195 TMDS BUFFER
28.6363MHz
HDMI RECEIVER ADV7850
I2S
S/PDIF
DSD
HBR
MCLK
SCLK
OUTPUT MUX
RXI2S
RXMCLK
RX64FS
RXFS
RXSPDIF
TXI2S
TXMCLK
TX64FS
TXFS
TXSPDIF
ARCSPDIF
ADV8003-3 HDMI TRANSCEIVER
27MHz
I2C/SPDIF
HDMI OUT1
DIGITAL IN
74VHCU04
COAXIAL1
COAXIAL2
OPTICAL 1
OPTICAL 2
COAX / OPT IN
AVR_E400 & X2000 E3 : 1 / 1
OTHER AVR : 2 /2
AVR_X2000 E2/E1C/K : 2 /0
5M80ZT100C5N AUDIO PLD
21.875MHz
ADSP21487 DIGITAL AUDIO DECODER
FLASH
SDRAM
DIN_FLFR
DIN_CSW
DIN_SLSR
DIN_SBLSBR
DIN_MCK
DIN_64FS
DIN_FS
DIN_SBLSBR
DSPOUT_64FS
DSPOUT_FS
DSPFATAF
DSPFATAC
DSPFATAS
DSPFATASB
12MHz
KEY_ MATRIX
MAIN MICOM R5F56108VNFP
ADV8003-3 CON
ADV7850 CON
FUNCTION DATA
DSP AUDIO CONT.
74LVC157.
DIR CONT.
PLD CONT
HDMI
CEC
HPD
OSD DATA
TUNER CONT
IPOD
POWER CONT
MUTE
RELAY
FL CONT
HEADPHONE OUT
H/P-L
H/P-R
ETHERNET
ETHERNET PHY LAN8720
NETWORK CONTROLLER DM860A
FLASH
SDRAM
USB FRONT
I2S
DAC PCM5100
PCM9211 (DIR+A/D)
DIRC1
DIRC2
DIRO1
DIRO2
DIRARC
DIRRXSPDIF
DIR8805PDIF
MUX
DIR
ADC
Oscillation Amplifier
24.576MHz
MCLK
SLRCK
SBCK
DIR_DATA
DIR_FS
DIR_64FS
DIR_256FS
DIR_RERR
DIR_AUDIO_VO
ADINR
ADINL
DAC_256FS
DAC_64FS
DAC_FS
DACDATAC
DACDATAS
DACDATASB
MAIN ZONE DAC PCM1690
ANALOG INPUT
DVD
SAT_CBL
DVR/VCR
CD
FRONT INPUT
V.AUX
OTHER AVR
TUNER
E3 : FM/AM
E2/E1C/K : FM AVR
MIC(Mini Jack)
M-Xport
OTHER AVR
R2A15218FP
INPUT SELECT & VOLUME
DSP_FL
EXT_FL
ANA_FR
DSP_FR
EXT_FR
TONE
Bypass
Tone
Tone+Mix
BI_AMP
HDAM &Current FB
OTHER AVR
PREOUT
FL
FR
C
SW1
SW2
SL
SR
SBL
SBR
AVR_E400 / X2000 : 0.1ch
OTHER AVR : 7.2ch
ZONE2 OUT
Z2L
Z2R
AVR_E400 EXCEPT
7.1CH EXT.IN
OTHER AVR
ZONE2 VOLUME CONTROL
HPF
MONO MIX
LINE DRIVER
ZONE2 VOLUME NJW1194
AVR_N400 EXCEPT

# fig11 : analog A/D (MAIN)

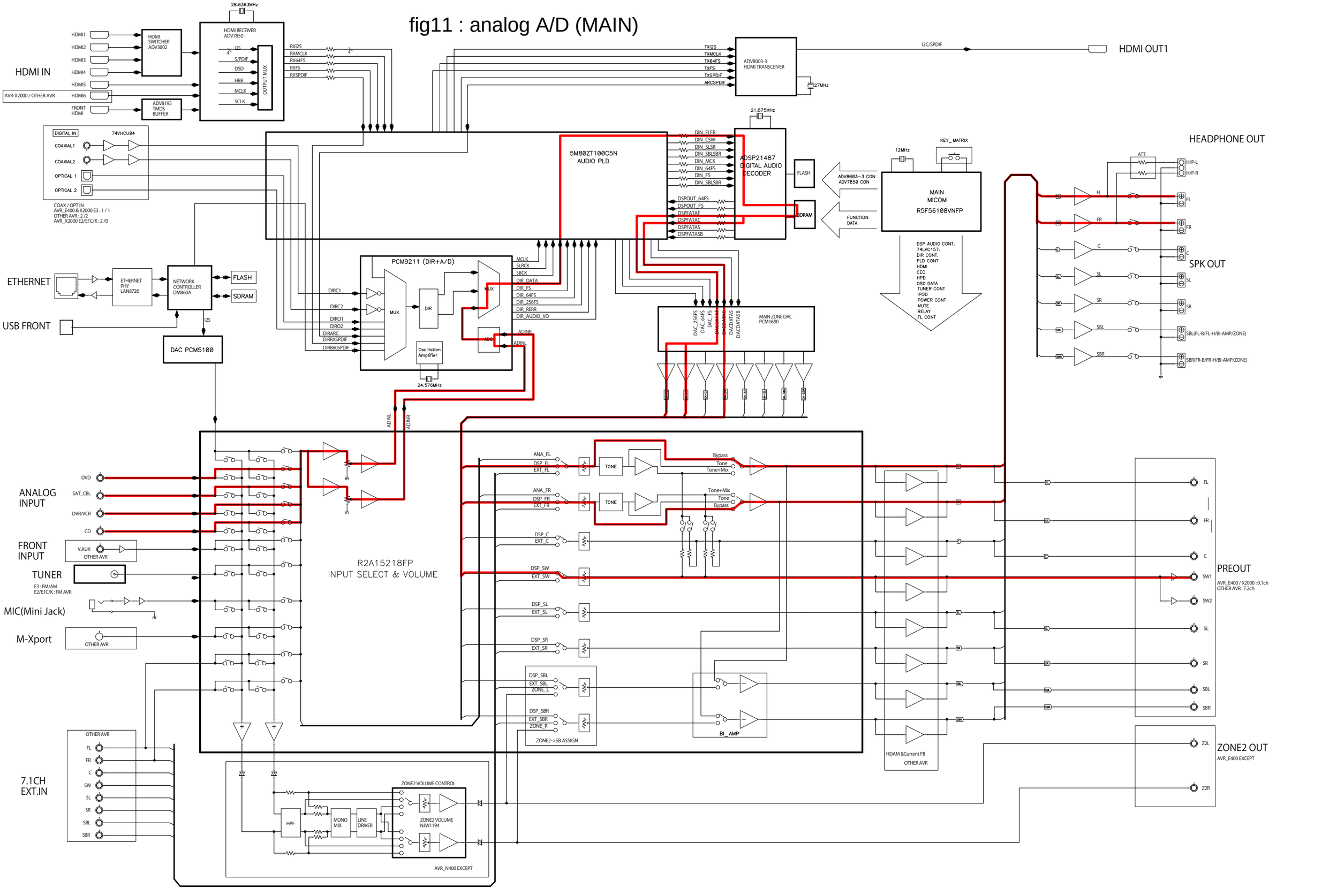

# fig12 : Amp assign: ZONE2

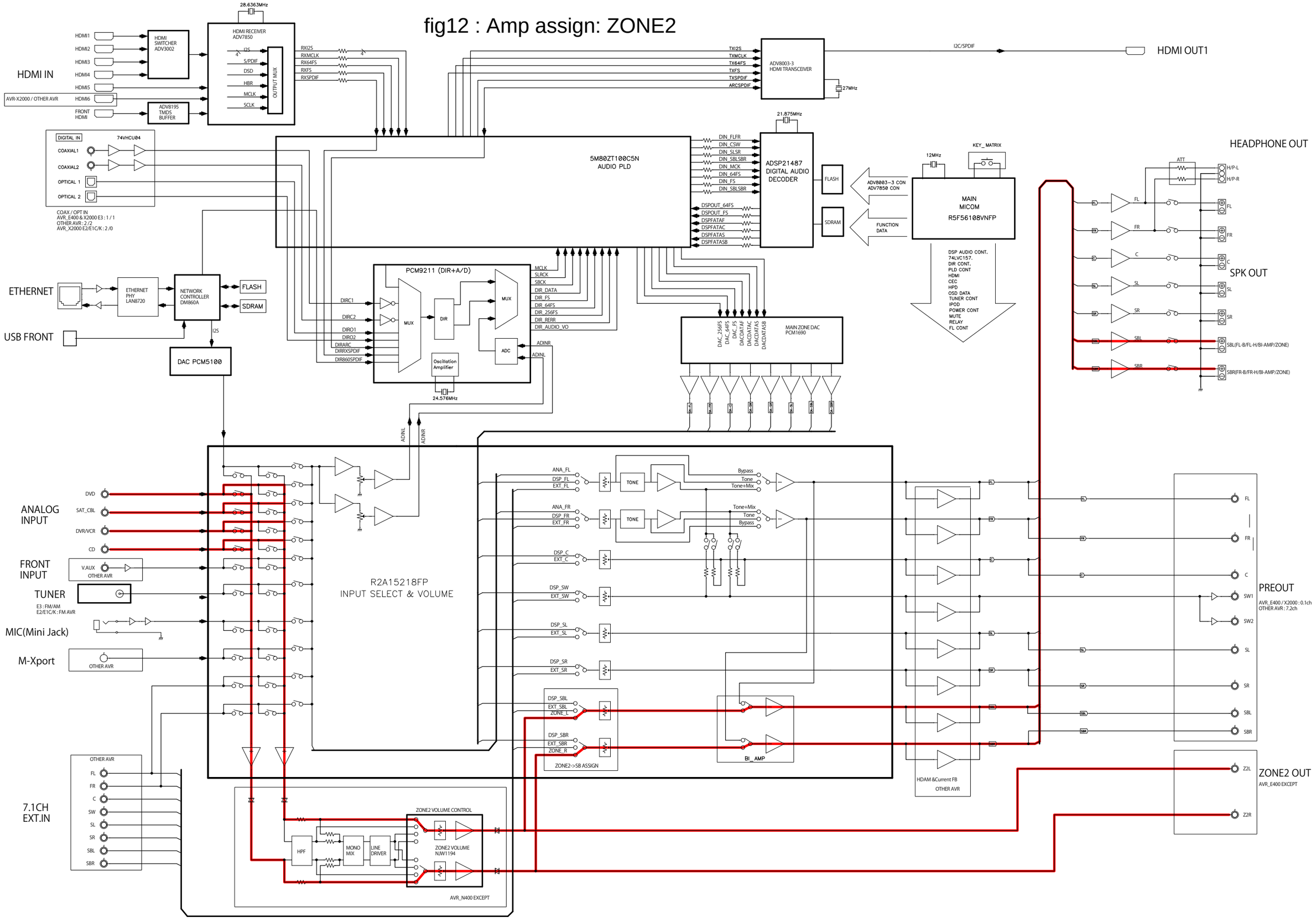

# fig13 : amp assign: bi-amp

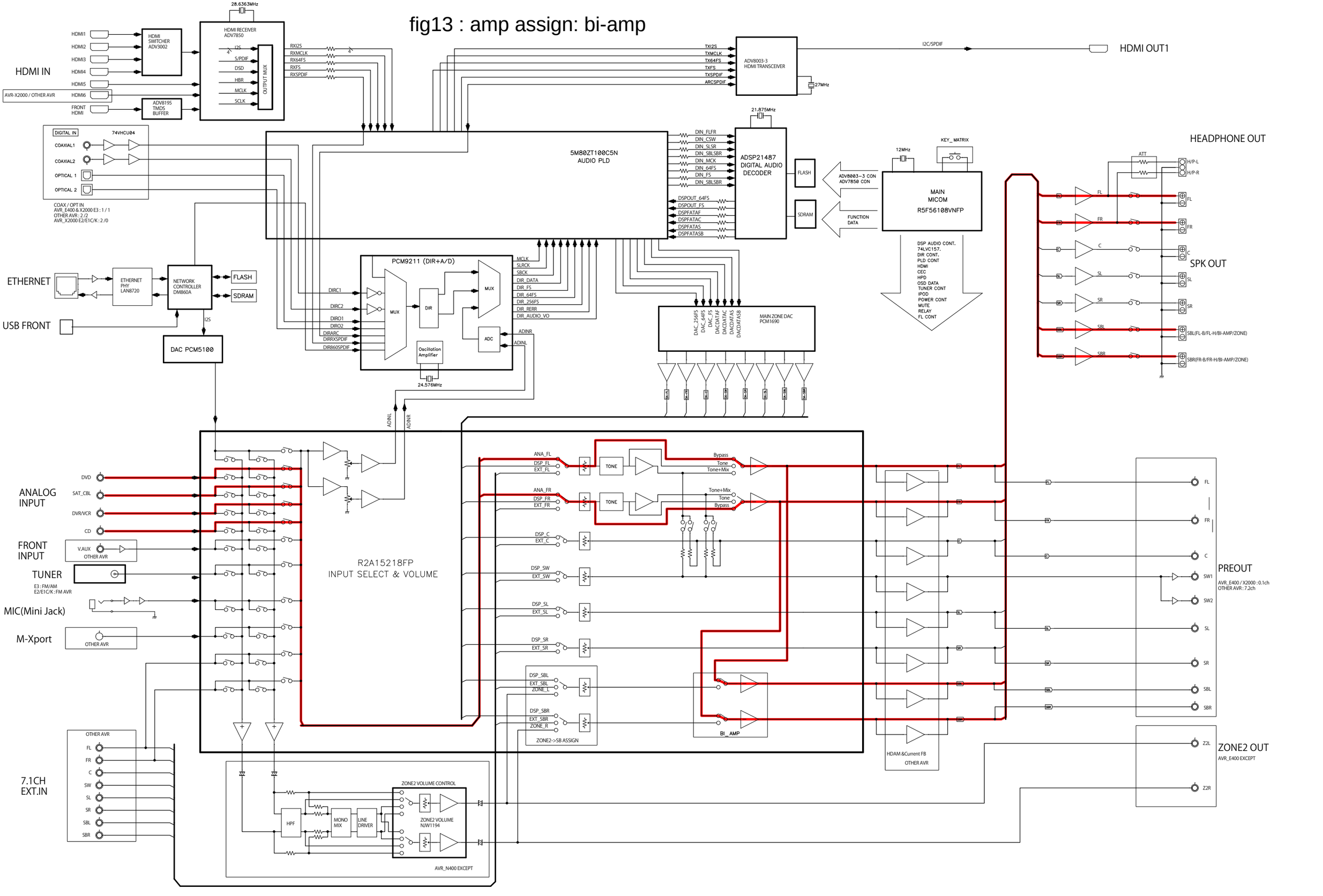

# fig14 : front height

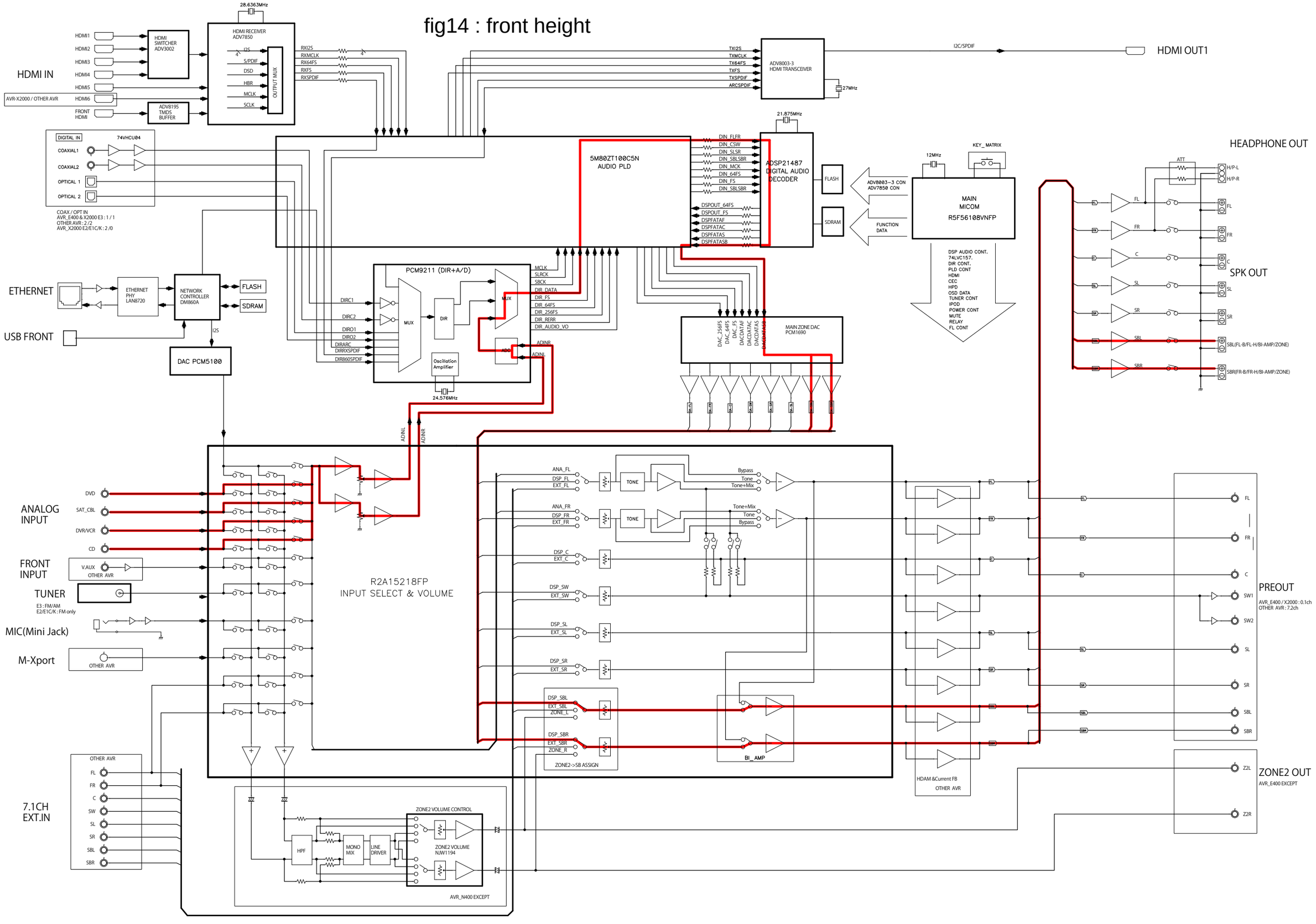

## 3.5. Errors checking mode (Displaying the protection history)

### 3.5.1. Operation specifications

**Error mode (Displaying the protection history):**
When the set is started up in this mode, the error information is displayed.

### 3.5.2. About the display on the FL display

When the **"STATUS"** button is pressed after the error (protection history display) mode is set, a history like the one shown below is displayed, depending on the conditions.

(1) Normal (when there has been no protection incident)

| FLD | NO PROTECT | | | | | | | | | | | | | |
|---|---|---|---|---|---|---|---|---|---|---|---|---|---|---|

(2) For ASO (when the last protection incident was ASO protection)

| FLD | PRT:ASO | | | | | | | | | | | | | |
|---|---|---|---|---|---|---|---|---|---|---|---|---|---|---|

**Cause:** The line between speaker terminals is shorted, or speakers with impedance of less than the rated value.
**Supplementary information:** As the excess current is detected after operation of the speaker relay, a short on the speaker terminal and the connected speaker can be identified.

If the power is turned on without correcting the abnormality, the protection function will work about 5 seconds later and the power supply will be shut off.

(3) For DC (when the last protection incident was DC protection)

| FLD | PRT:DC | | | | | | | | | | | | | |
|---|---|---|---|---|---|---|---|---|---|---|---|---|---|---|

**Cause:** DC output of the power amplifier is abnormal.

If the power is turned on without correcting the abnormality, the protection function will work about 5 seconds later and the power supply will be shut off.

(4) For THERMAL (when the last protection incident was THERMAL(A) or THERMAL(B) protection)

| FLD | PRT:THERMAL A | | | | | | | | | | | | | |
|---|---|---|---|---|---|---|---|---|---|---|---|---|---|---|

| FLD | PRT:THERMAL B | | | | | | | | | | | | | |
|---|---|---|---|---|---|---|---|---|---|---|---|---|---|---|

**Cause:** The temperature of the heat sink is excessive.

If the power is turned on without correcting the abnormality, the protection function will work about 5 seconds later and the power supply will be shut off.

※ Additional causes of protection can be due to loose connections, associated components, Microprocessor, etc.

When the **"STATUS"** button is pressed again after the protection history as shown above is displayed, the normal display reappears.

### 3.5.3. Clearing the protection history

There are two ways to clear the protection history, as described below.

(1) Start up the set in error (protection display) mode and display the error, then press and hold down the **"DIMMER"** button for 3 seconds.

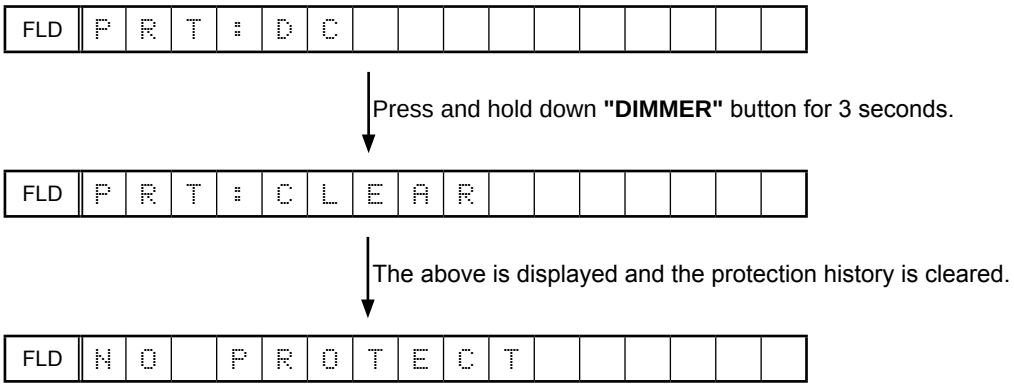


(2) Initialize. (Refer to "Initializing INTEGRATED NETWORK AV RECEIVER" 11 page)

※ If you want to save a backup, perform the method in 2.3..

**Warning indication by the POWER LED**

If the power is turned off when a protection incident has been detected, the POWER LED (red) flashes as a warning according to the conditions in which the protection incident occurred.

(1) ASO/DC PROTECTION : Flashes at intervals of 0.5 seconds (0.25 seconds lit, 0.25 seconds off)

(2) THERMAL (A/B) PROTECTION : Flashes at intervals of 2 seconds (1 second lit, 1 second off)

## 3.6. 232C standby clear mode (AVR-X2000E3 only)

### 3.6.1. Operation specifications

232C standby clear mode:

This switches the 232C standby mode to the Normal standby mode.

Starting up:

Press the **"STATUS"** button while the following is displayed to switch to the Normal standby mode.

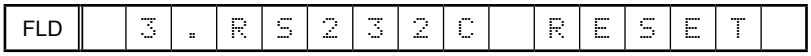

## 3.7. Operation Info mode

### 3.7.1. Specifications

This mode displays the accumulated operating time, power on count, counts for each protection on the set.

### 3.7.2. About the display on the FL display

When the set has started in the Operation Info mode, press the **"STATUS"** button to display information in the following order.

(a) Accumulated operating time

↑ Time display

**"STATUS"**

(b) Power on count

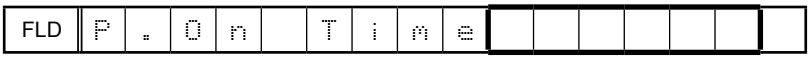


↑Count display

**"STATUS"**

(c) DC /ASO Protection count

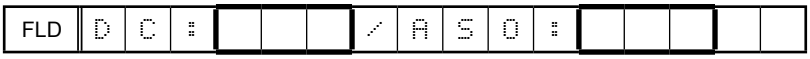


**"STATUS"**

(d) Thermal Protection count

**"STATUS"**

(Returns to normal display)

# 4. Protection Pass mode

## 4.1. Specifications

- Turn the power on with Protection disabled.
  Except for disabling the Protection detection, this operation is the same as the normal power on.

## 4.2. Operation

1. Press the "Power Operation (⏻)" button while pressing
   **"ZONE2 SOURCE"** and **"STATUS"** and **"TUNER PRESET CH -"**
   (**"ZONE2 SOURCE"** and **"STATUS"** and **"SOURCE SELECT ◄"** for AVR-E400)
   buttons on the set to turn the power on.
2. The POWER ON sequence starts. The Protection detection is disabled.

| FLD | Protection Pass |
|---|---|

This is displayed for 5 seconds before returning to the normal display.

# 5. DM860A Reboot mode

## 5.1. Specifications

- When DM860A is hung up, DM860A is restarted.
  Even when Network standby is set (Setup Menu - Network - Network - Always ON), DM860A can be reset.

## 5.2. Operation

1. Turn on MAIN ZONE button, and select NETWORK for the input source.
2. Press and hold the **"TUNER PRESET CH +"** and **"TUNER PRESET CH -"** buttons
   (**"SOURCE SELECT ►"** and **"SOURCE SELECT ◄ "** for AVR-E400) for 3 seconds and longer.
3. DM860A is restarted and returns to the normal display.

| FLD | Network Restart |
|---|---|

**NOTE:**
The same operation cannot be accepted for one minute after the last 860 Reboot.

# 6. Remote ID Setup mode

## 6.1. Specifications

When using multiple DENON AV receivers in the same room, make this setting so that only the desired AV receiver operates.

## 6.2. Setting the AV receivers

**Starting up:**

Turn on the power, then press and hold down the **"STATUS"** and **"DIMMER"** buttons for over 3 seconds.

(1) When Remote ID Setup mode is started, the following is displayed.

| FLD | | | | R | E | M | O | T | E | | I | D | | ? | | |
|---|---|---|---|---|---|---|---|---|---|---|---|---|---|---|---|---|

(2) Press the "QUICK SELECT 1 - 4" button that corresponds to the number you want to set.

| Button | FL Display |
|---|---|
| QUICK SELECT 1 | REMOTE ID 1 |
| QUICK SELECT 2 | REMOTE ID 2 |
| QUICK SELECT 3 | REMOTE ID 3 |
| QUICK SELECT 4 | REMOTE ID 4 |

(3) Turn off the power using "Power operation (⏻)" button.
(4) Turn on the power using "Power operation (⏻)" button.

b When Remote ID Setup mode is running, operations other than the "QUICK SELECT 1 - 4" buttons or "Power operation (⏻)" buttons on the main unit are not received.
b For the remote control that is supplied with this unit, you cannot change the REMOTE ID.

**NOTE:**

If the IDs do not match, "AVAMP∗" (z is the main unit's remote control ID) appears on the display when the remote control unit is operated.

# 7. NETWORK Initialization mode

## 7.1. Behavior specifications

Initializes NETWORK related settings.
(1) Favorites
(2) Favorites Station
(3) Presets
(4) Internet Radio Recently Played
(5) Flickr contacts
(6) User ID
(7) Resume Playback station

## 7.2. Starting up

① Turn on the power and switch to NETWORK FUNCTION.
② Wait until ”No Network Connection” or ”Favorites” is displayed on FLD.
③ Press and hold **"ZONE2 SOURCE"** and **"DIMMER"**.
④ When “Initializing” is displayed on FLD, release the buttons.
If it is not displayed within 15 seconds, try again from Step ③.
⑤ Wait until ”No Network Connection” or ”Favorites” is displayed on FLD.
⑥ Press the "Power operation (⏻)" button to turn off and on the power.

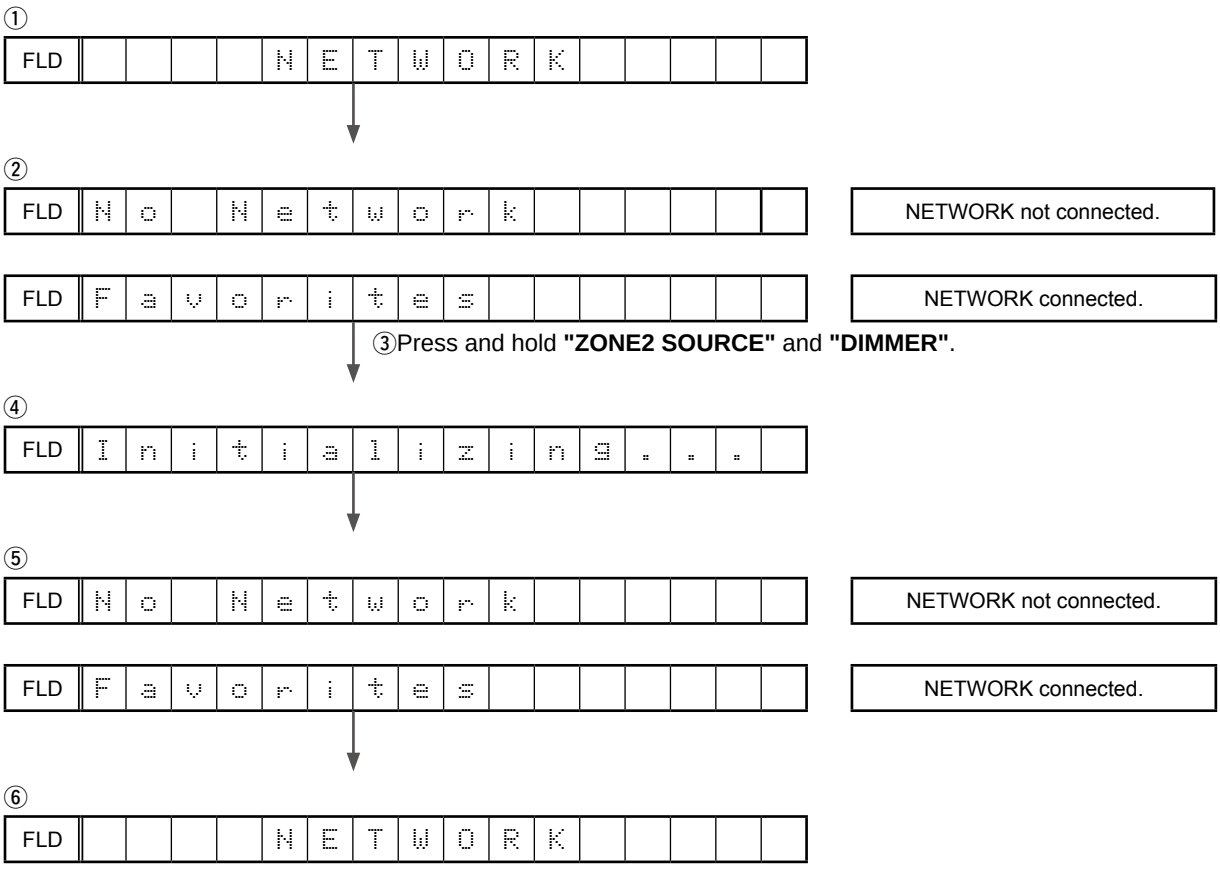

# JIG FOR SERVICING

When you repair the printing board, you can use the following JIG (Extension cable kit).
Please order it from DENON Official Service. Distributor in your region if necessary.

**NOTE**: The incorrect connection with in the JIG (EXTENSION UNIT KIT) may cause damage.

## • Connection of PCB HDMI JIG

-Preparation-

8U-110084S : EXTENSION UNIT KIT : 1Set
8U-110136S : EXTENSION UNIT KIT : 1Set
Insulation sheet (Do not supply it) : 1 sheet
Ground lead (Do not supply it) : 2 pc

-Procedures-

(1) Remove the screws.

(2) Disconnect the connector board.

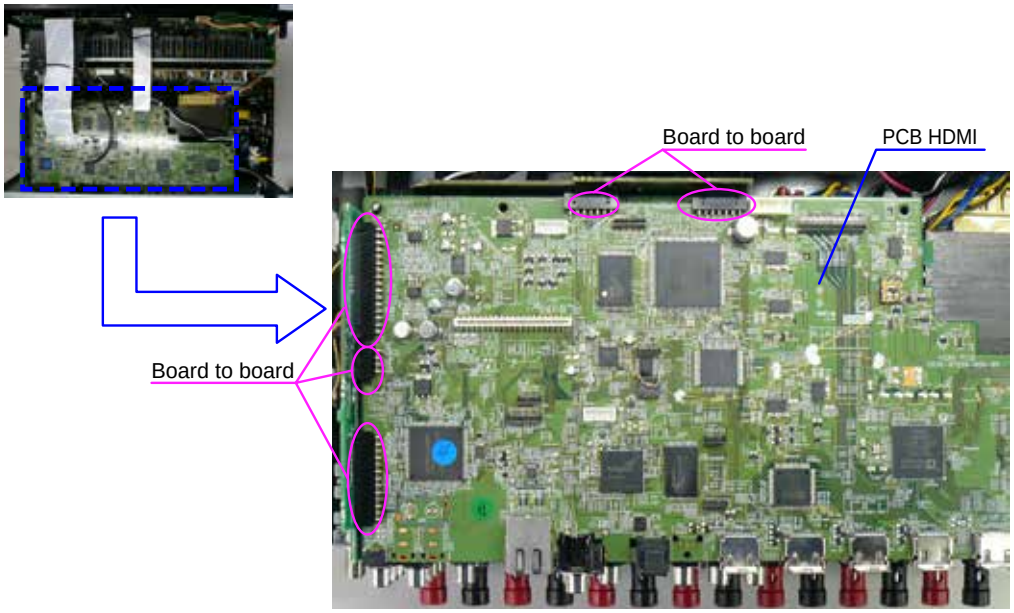

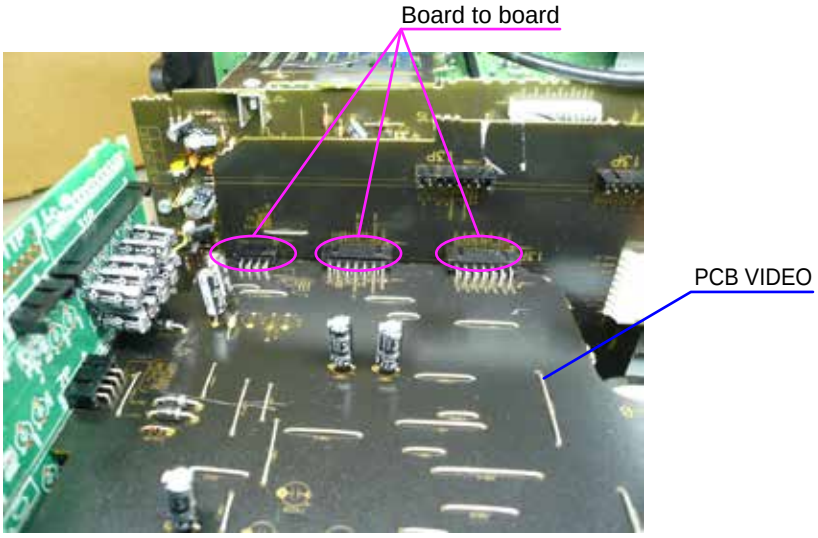


(3) Detach PCB HDMI from the chassis, and turn it over.
Please put an insulation sheet that is larger than PCB HDMI under PCB.

※ Connect the ground point of PCB to the chassis with a ground lead or the like.

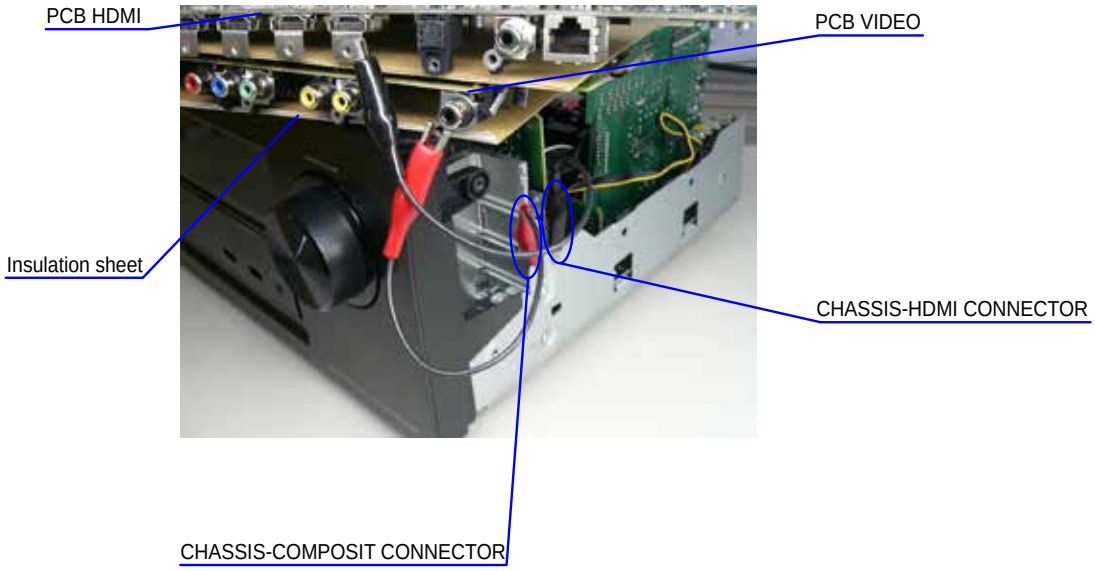

(4) Connect the Nine extension jig cables.

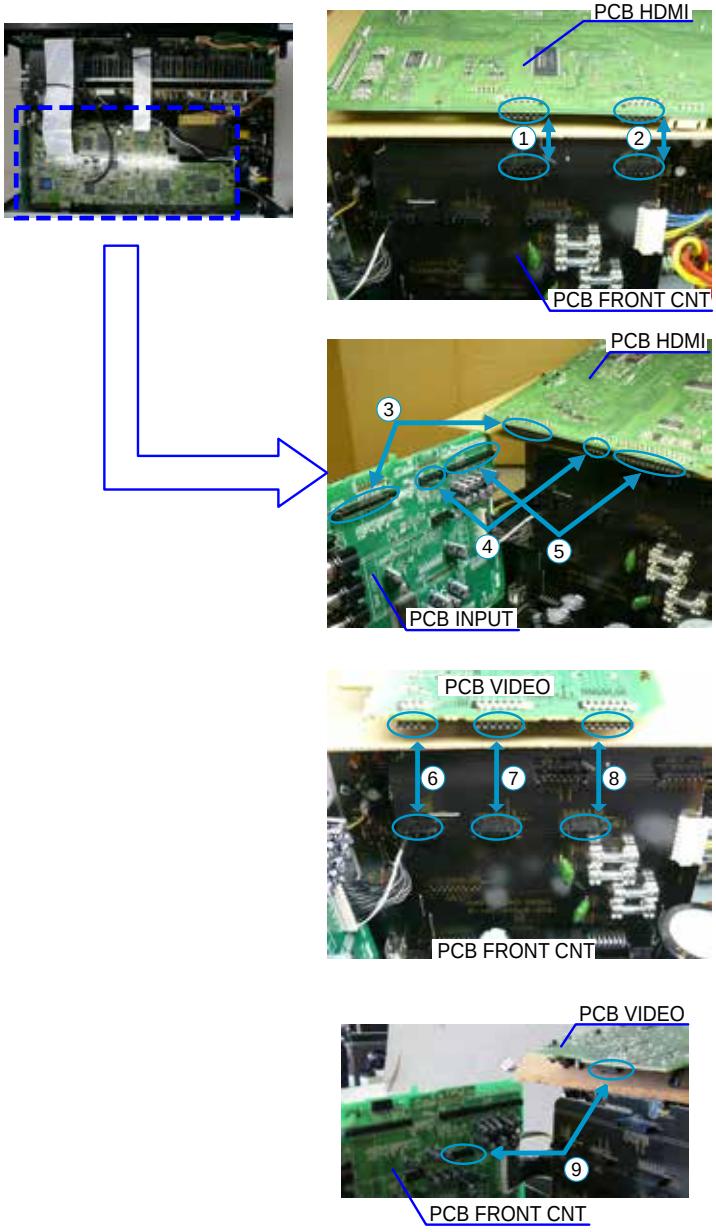


Connection table of Board to Board

| No. | Pin | Ref. No. | PCB | | Ref. No. | PCB |
|---|---|---|---|---|---|---|
| ① | 13pin | CP3404 | FRONT CNT | ⟷ | N3404 | HDMI |
| ② | 13pin | CP3401 | FRONT CNT | ⟷ | N3401 | HDMI |
| ③ | 25pin | CP4200 | INPUT PCB | ⟷ | N3407 | HDMI |
| ④ | 7pin | CP4203 | INPUT PCB | ⟷ | N3406 | HDMI |
| ⑤ | 31pin | CP4201 | INPUT PCB | ⟷ | N3403 | HDMI |
| ⑥ | 7pin | CP5004 | FRONT CNT | ⟷ | CN5004 | VIDEO |
| ⑦ | 13pin | CP5001 | FRONT CNT | ⟷ | CN5001 | VIDEO |
| ⑧ | 13pin | CP5000 | FRONT CNT | ⟷ | CN5000 | VIDEO |
| ⑨ | 9pin | CP4204 | INPUT | ⟷ | CN5003 | VIDEO |

# WHEN THE MICROPROCESSOR IS REPLACED WITH A NEW ONE

When the U-PRO (Microprocessor) or the Flash ROM is replaced, confirm the following.

| PCB Name | Ref. No. | Description | After replaced | Remark |
|---|---|---|---|---|
| HDMI | U3002 | R5F56108VNFP | **D** | SOFTWARE: Main |
| HDMI | U2003 | MX29LV160DBTI | **B** | SOFTWARE: DSP ROM |
| HDMI | U2205 | 5M80ZT100C5N | **B** | SOFTWARE: AUDIO PLD |
| HDMI | U2603 | H27U1G8F2BTR | **D** | SOFTWARE: DM860A ROM |
| HDMI | U1602 | MX25L12836EMI-10G | **D** | SOFTWARE: GUI ROM |

After replacing

**A** : Mask ROM (With software). No need for write-in of software to the microprocessor.

**B** : Flash ROM (With software). Usually, no need for write-in of software. But, when the software was updated, you should write the new software on the microprocessor or flash ROM. Please check the software version.

**C** : Empty Flash ROM (Without software). You should write the software on the microprocessor or flash ROM. Refer to "Update procedure" or "writing procedure", when you write the software.

**D** : Flash ROM (With software). But you should write to the latest version of each region.

# PROCEDURE FOR UPGRADING THE VERSION OF THE FIRMWARE

**NOTE**: When the following are replaced, always rewrite with updated firmware using DFW. (Refer to parts list of "HDMI PCB UNIT ASS'Y" (See the part list in Excel format.)

- PCB HDMI ASSY
- U3002 (R5F56108VNFP)
- U2003(MX29LV160DBTI)
- U2205(5M80ZT100C5N)
- U2603(H27U1G8F2BTR)

After replacing U2603, always update the Firmware. After the update has been completed, initialize network. (<50 page>)

- U1602(MX25L12836EMI-10G)

## 1. How to update by DFW

### [AVR-E400E3/AVR-X2000E2 , E1 , E1C models]

### 1.1. Preparations before starting the operation

(1) Personal Computer (Installed "DFW_0064_AVRX2000_E400_(Rev.X.X.X).exe".
(2) RS-232C cable (9P (Male), Straight).
(3) 8U-210100S WRITING KIT.

### 1.2. Connection of AV receiver

(1) Confirm the power on/off switch of the AV receiver is turning off.
(2) Connect the update terminal of AV receiver with the "WRITING KIT".
(3) Connect the RS-232C cable from PC with the "WRITING KIT".

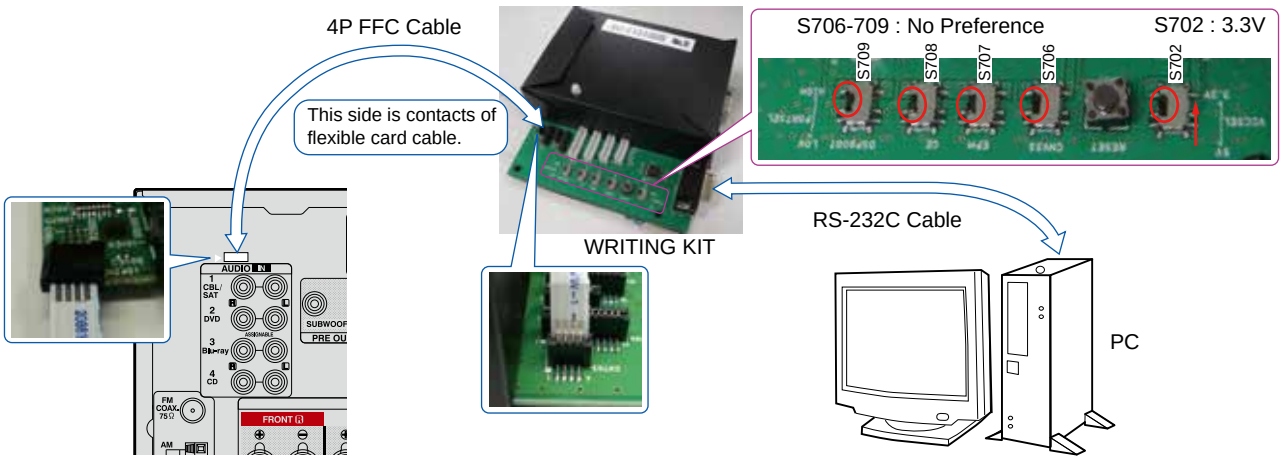

## [AVR-X2000E3 model]

### 1.1. Preparations before starting the operation

(1) Personal Computer (Installed "DFW_0064_AVRX2000_E400_(Rev.X.X.X).exe".
(2) RS-232C cable (9P (Male), Straight).

### 1.2. Connection of AV receiver

(1) Confirm the power on/off switch of the AV receiver is turning off.
(2) Connect the RS-232C cable from PC with the "RS232C Terminal of AV receiver".

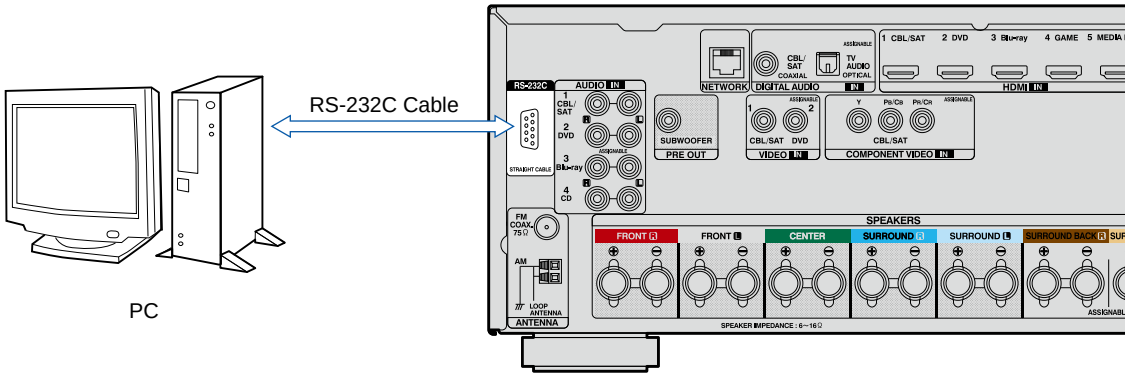


## [All model commonness]

### 1.3. Turn on the AV receiver

Operate the following. Turn on the AV receiver.

(1) Connect the power cable to the AC outlet while simultaneously pushing the ""SOURCE SELECT ◄", "SOURCE SELECT ►" and "ZONE2 SOURCE" (AVR-E400E3)" or ""TUNER PRESET CH +" and "TUNER PRESET CH –" and "ZONE2 SOURCE" (except AVR-E400E3)" button of the front panel.
(2) Confirm the power indicator is green and "WRITTING" is displayed in the front panel.

### 1.4. Run the DFW

Run the "DFW_0064_AVRX2000_E400_(Rev.X.X.X).exe" on desktop of PC.

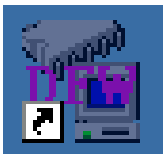

### 1.5. Communication check

(1) Select the serial port number of RS-232C in PC.
(2) Click the "Check Comm." button.

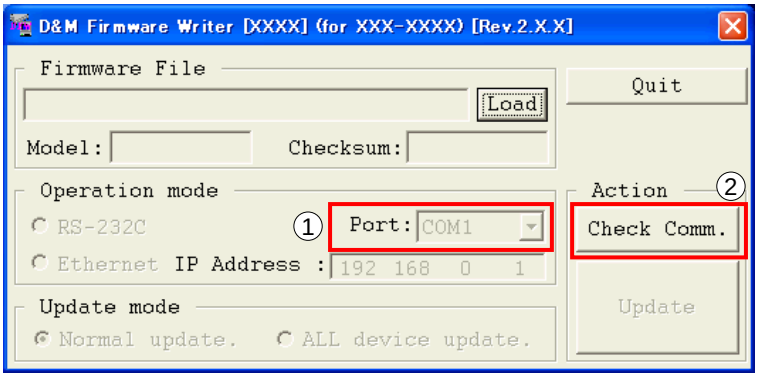

(3) When connection is good, then you can see the "Communication check OK." message.

(4) If connection is not good, then you can see the "Communication check NG" message.

Please confirm the following

(a) Check the connection of the AV receiver and PC. (refer to "1.2. Connection of the AV receiver" )

(b) Check the operation mode of the AV receiver. (refer to "1.3.Turn on the AV receiver")

(c) Check the selection of the RS-232C port number of PC.

## 1.6. Download the firmware

(1) Click the "Load" button.

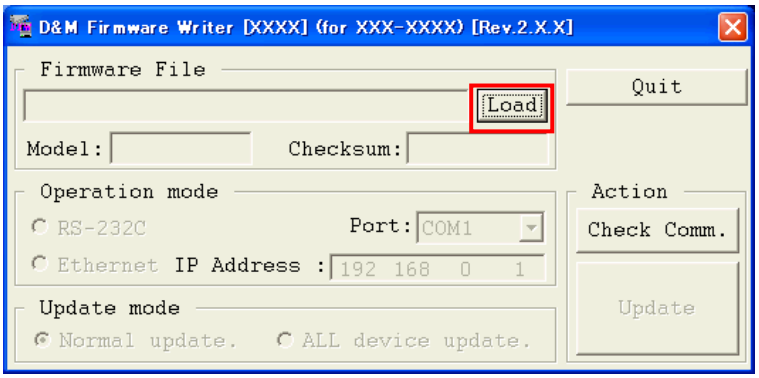


(2) Download the firmware from the specified download source to PC.

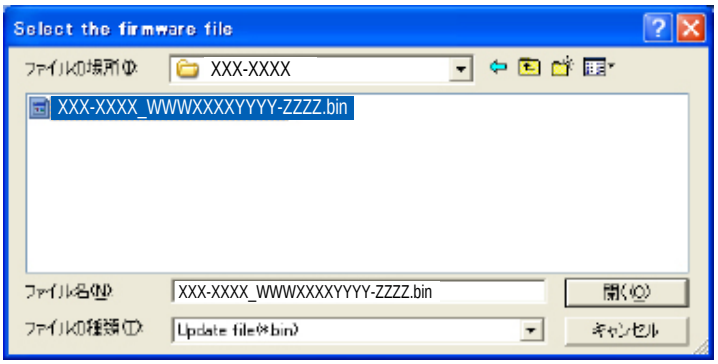

## 1.7. Complete the firmware updating

(1) Click the "Update" button.

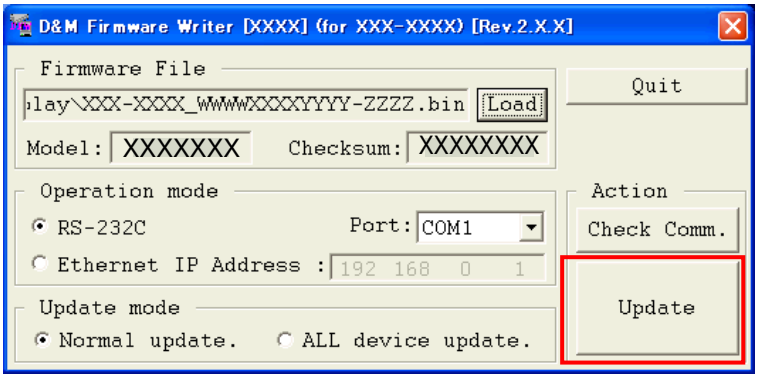


(2) When writing of the firmware is completed, the power of AV receiver turns on automatically and you can see the "Update completed" message.

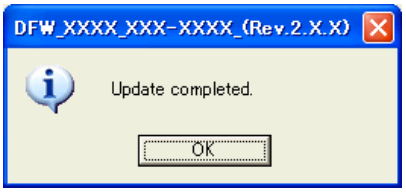


After replacing U2603, always update the Firmware. After the update has been completed, initialize network. (<50page)

(3) If you can't complete the firmware update, please retry the firmware update from "1.3. Turn on the AV receiver".

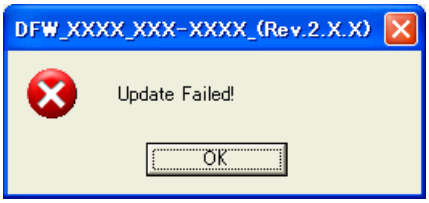


## 1.8. Notice:

Please keep the following notice for firmware update.

(a) Keep the PC environment
(b) Avoid the communication cable from the electrical noise source.
(e.g. telephone cable, AC line, a fluorescent light)
(c) Don't remove cable during update.
(d) Don't turn off the power during update.
(e) Don't run other PC application during update.
(f) Stop the resident program on PC (Virus checker and System check utility, etc.)
(g) Stop the screen saver on PC.
(h) Stop the power save ability on PC.
(i) In case of laptop PC, Use the AC adaptor.

## Confirming the firmware's number after upgraded

After updating the firmware, check the version. Refer to "**1. µcom/DSP Version display mode**" (24 page ).

## 2. How to update by DPMS

You can update the firmware by downloading the latest version from the Internet.

### 2.1. Connecting to the Network

(1) System requirements

- Internet Connection by Broadband Circuit
- Modem
- Router
- Ethernet cable (CAT-5 or greater recommended)

(2) Setting

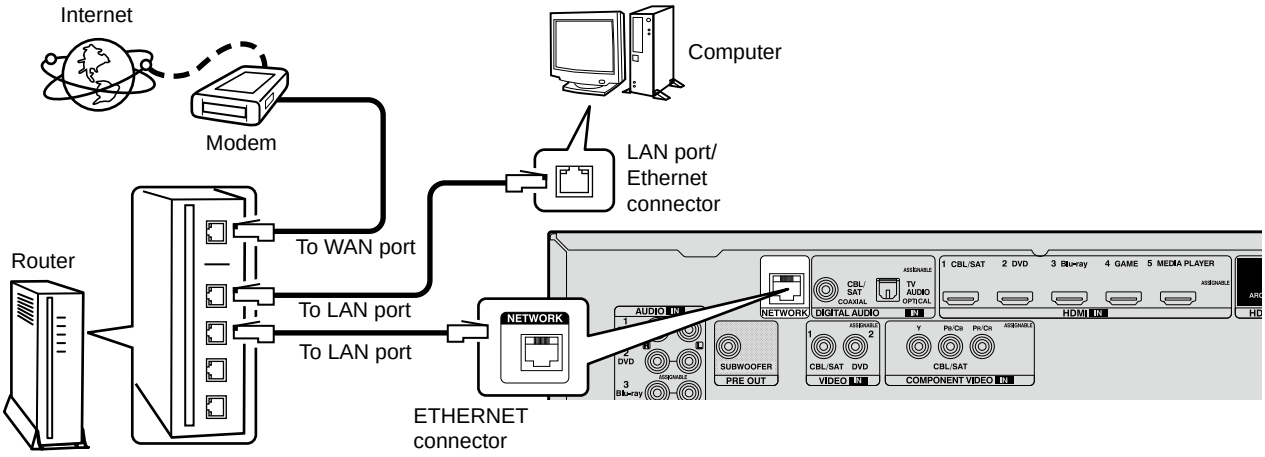


### 2.2. Checking and updating the firmware

Check if the latest firmware exists. You can also check approximately time required to complete an update.

(1) Press the "SETUP" button on the remote control to display the GUI menu.

(2) Use the cursor buttons to select "General" → "Firmware" → "Update" → "Check for Update".

(3) Press the "ENTER" button.

- The latest version of the firmware on the website is displayed.
- If the firmware on the website is latest, proceed to (4).
- If the latest firmware has been already installed, press the "SETUP" button to close the menu.

(4) Use the cursor buttons to select "Start", then press the "ENTER" button.

- During update, the power indicator lights in red and the GUI screen disappears. And an approximately remaining time is indicated on the display.
- When updating is complete the power indicator lights in green and normal status is resumed.

--- Cautions on Firmware Update ---

- In order to update the firmware, you must have the correct system requirements and settings for a broadband Internet connection.
- Do not turn off the power until updating is completed.
- Even with a broadband connection to the Internet, approximately 1 hour is required for the updating procedure to be completed.
  Once updating starts, normal operations on the this unit cannot be performed until updating is completed. Also, setting items of the GUI menu of this unit or setting items of the image adjustment may be initialized.
  Note down the settings before updating, and set them again after updating.

## 2.3. About the error code

See the table below for error codes, details of faults, and coping strategies when the firmware is updated through DPMS (Denon Product Management Server).

| Error Code | Details of Error code | Display | Coping strategies |
|---|---|---|---|
| 01 | Log-in to DPMS failed. | Login failed 01 | Reset and update again.<br>Carry out the update in an environment that has little network load. |
| 02 | Line, etc., is busy when logging into DPMS. | Server is busy02 | Carry out the update in an environment that has little network load. |
| 03 | Connection to DPMS failed. | ConnectionFai103 | Check the network connection.<br>Carry out the update in an environment that has little network load. |
| 04 | Firmware file data was requested but error message was received. | ConnectionFai104 | Check the network connection.<br>Carry out the update in an environment that has little network load. |
| 05 | Firmware file data was requested but it timed out. | ConnectionFai105 | Check the network connection.<br>Carry out the update in an environment that has little network load. |
| 06 | Firmware file data was requested but error message was received. | ConnectionFai106 | Check the network connection.<br>Carry out the update in an environment that has little network load. |
| 07 | All firmware file data was requested but it timed out. | ConnectionFai107 | Check the network connection.<br>Carry out the update in an environment that has little network load. |
| 08 | Firmware file data of Main CPU was requested but error message was received. | ConnectionFai108 | Check the network connection.<br>Carry out the update in an environment that has little network load. |
| 09 | Firmware file data of Main CPU was requested but it timed out. | ConnectionFai109 | Check the network connection.<br>Carry out the update in an environment that has little network load. |
| 0A | Error (NG) message was received when firmware of Main CPU was downloaded. | Download fail 0A | Check the network connection.<br>Carry out the update in an environment that has little network load. |
| 0B | Error (line congestion) message was received when firmware of Main CPU was downloaded. | Download fail 0B | Check the network connection.<br>Carry out the update in an environment that has little network load. |
| 0C | Error (connection failure) message was received when firmware of Main CPU was downloaded. | Download fail 0C | Check the network connection.<br>Carry out the update in an environment that has little network load. |
| 0D | Received Package Version is wrong. | Download fail 0D | Check the network connection.<br>Carry out the update in an environment that has little network load. |
| 0E | Connection to DPMS failed.<br>(can not get NTP) | ConnectionFai10E | Check the network connection.<br>Carry out the update in an environment that has little network load. |
| 10 | Main CPU failed to receive firmware for rewriting sent from DM860A (when timed out). | Updating fail 10 | Turn off and on the power. Updating starts automatically. |

| Error Code | Details of Error code | Display | Coping strategies |
|---|---|---|---|
| 11 | Main CPU failed to receive firmware for rewriting sent from DM860A (when an error occurred). | 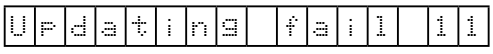 | Turn off and on the power. Updating starts automatically. |
| 12 | There was invalid data in the firmware for rewriting sent from DM860A to Main CPU (when a Check Sum error occurred). | 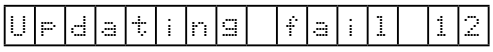 | Turn off and on the power. Updating starts automatically. |
| 13 | The deletion of block data failed before Main CPU was rewritten. | 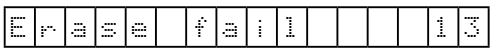 | Turn off and on the power. Updating starts automatically. |
| 14 | The rewriting of block data failed when Main CPU was rewritten. | 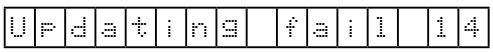 | Turn off and on the power. Updating starts automatically. |
| 15 | The data verification was invalid after Main CPU was rewritten. | 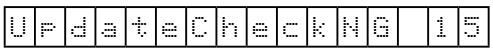 | Turn off and on the power. Updating starts automatically. |
| 20 | Failure to acquire (Boot Loader Mode) IP address before rewriting DM860A (AutoIP). | 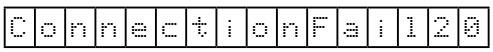 | Check the network connection. Carry out the update in an environment that has little network load. |
| 21 | Failure to acquire (Boot Loader Mode) IP address before rewriting DM860A (when timed out). | 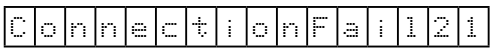 | Check the network connection. Carry out the update in an environment that has little network load. |
| 22 | Log-in to DPMS failed. | 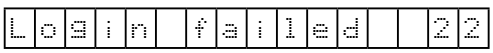 | Reset and update again. Carry out the update in an environment that has little network load. |
| 23 | Line, etc., is busy when logging into DPMS. | 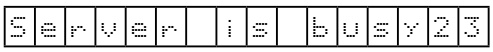 | Carry out the update in an environment that has little network load. |
| 24 | Connection to DPMS failed. | 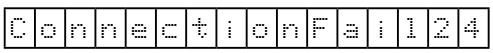 | Check the network connection. Carry out the update in an environment that has little network load. |
| 25 | Mode change failure of DM860A. | 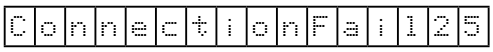 | Reset and update again. |
| 26 | Data acquisition failed (timed out) when firmware of Main CPU was downloaded. Received Package Version is wrong. | 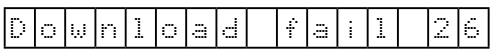 | Check the network connection. Carry out the update in an environment that has little network load. |
| 27 | Mode change failure of DM860A. | 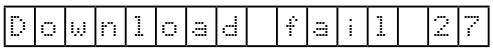 | Reset and update again. |
| 36 | Log-in to DPMS failed when Main CPU was rewritten. | 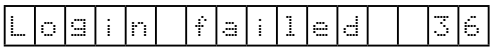 | Carry out the update in an environment that has little network load. |
| 37 | Line, etc., is busy when logging into DPMS when Main CPU was rewritten. | | Carry out the update in an environment that has little network load. |
| 38 | Connection to DPMS failed when Main CPU was rewritten. | 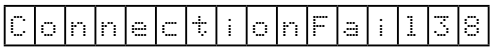 | Check the network connection. Carry out the update in an environment that has little network load. |

| Error Code | Details of Error code | Display | Coping strategies |
|---|---|---|---|
| 39 | Connection to DPMS timed out when Main CPU was rewritten. | ConnectionFail139 | Check the network connection.<br>Carry out the update in an environment that has little network load. |
| 3A | Error (NG) message was received when firmware was downloaded or Main CPU was rewritten. | Download fail 3A | Turn off and on the power.<br>Updating starts automatically.<br>Carry out the update in an environment that has little network load. |
| 3B | Error (line congestion) message received when downloading firmware when Main CPU was rewritten. | Download fail 3B | Turn off and on the power.<br>Updating starts automatically.<br>Carry out the update in an environment that has little network load. |
| 3C | Error (connection failure) message received when downloading firmware when Main CPU was rewritten. | Download fail 3C | Turn off and on the power.<br>Updating starts automatically.<br>Carry out the update in an environment that has little network load. |
| 3D | Failure to acquire (Boot Loader Mode) IP address before rewriting DM860A (AutoIP). | ConnectionFail13D | Check the network connection.<br>Carry out the update in an environment that has little network load. |
| 3E | Failure to acquire (Boot Loader Mode) IP address before rewriting DM860A (when timed out). | ConnectionFail13E | Check the network connection.<br>Carry out the update in an environment that has little network load. |
| 50 | Log-in to DPMS failed when firmware such as DSP and PLD was rewritten. | Login failed 50 | Carry out the update in an environment that has little network load. |
| 51 | Line, etc., is busy when the log-in to DPMS when firmware such as DSP and PLD was rewritten. | Server is busy51 | Carry out the update in an environment that has little network load. |
| 52 | Connection to DPMS failed when firmware such as DSP and PLD was rewritten. | ConnectionFail152 | Check the network connection.<br>Carry out the update in an environment that has little network load. |
| 54 | Error message received regarding firmware data after the log-in to DPMS when firmware such as DSP and PLD was rewritten. | Updating fail 54 | Turn off and on the power.<br>Updating starts automatically.<br>Carry out the update in an environment that has little network load. |
| 55 | When firmware such as DSP and PLD was rewritten, request was made for firmware data after the log-in to DPMS, but it timed out. | Updating fail 55 | Turn off and on the power.<br>Updating starts automatically.<br>Carry out the update in an environment that has little network load. |
| 56 | Downloading firmware failed after the log-in to DPMS when firmware such as DSP and PLD was rewritten. | Download fail 56 | Turn off and on the power.<br>Updating starts automatically.<br>Carry out the update in an environment that has little network load. |
| 57 | Firmware download error received (line congestion) after the log-in to DPMS when firmware such as DSP and PLD was rewritten. | Download fail 57 | Turn off and on the power.<br>Updating starts automatically.<br>Carry out the update in an environment that has little network load. |
| 58 | Firmware download error received (connection failure) after the log-in to DPMS when firmware such as DSP and PLD was rewritten. | Download fail 58 | Turn off and on the power.<br>Updating starts automatically.<br>Carry out the update in an environment that has little network load. |
| 5A | NACK was received when "C" command sent to DSP, PLD etc. | ConnectionFail15A | Turn off and on the power.<br>Updating starts automatically. |

| Error Code | Details of Error code | Display | Coping strategies |
|---|---|---|---|
| 5B | NACK was received when "L" command sent to DSP, PLD etc. | 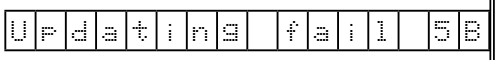 | Turn off and on the power. Updating starts automatically. |
| 5C | DSP, PLD etc. failed to receive firmware for rewriting sent from DM860A (when timed out). | 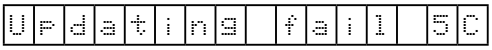 | Turn off and on the power. Updating starts automatically. |
| 5D | DSP, PLD etc. failed to receive firmware for rewriting sent from DM860A (when an error occurred). | 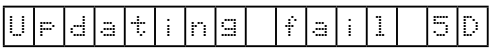 | Turn off and on the power. Updating starts automatically. |
| 5E | Data in firmware such as DSP and PLD for rewriting sent from DM860A was invalid (when a Check Sum error occurred). | 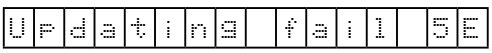 | Turn off and on the power. Updating starts automatically. |
| 5F | Invalid data in firmware such as DSP and PLD for rewriting sent from DM860A was invalid (invalid data was received). | 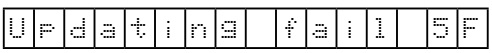 | Turn off and on the power. Updating starts automatically. |
| 60 | NACK was received when "P" command sent to DSP, PLD etc. | 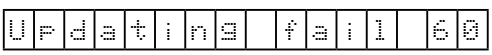 | Turn off and on the power. Updating starts automatically. |
| 61 | NACK was received when "I" command sent to DSP, PLD etc. | 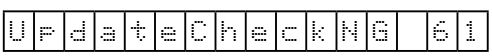 | Turn off and on the power. Updating starts automatically. |
| 80 | Acquisition of serial flash data failed before serial flash was deleted. | 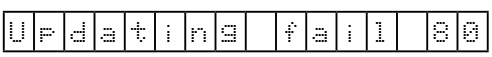 | Turn off and on the power. Updating starts automatically. |
| 81 | Deleting data failed before serial flash was rewritten. | 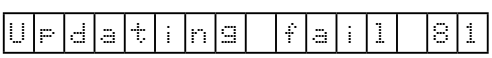 | Turn off and on the power. Updating starts automatically. |
| 82 | Receiving firmware for rewriting serial flash sent by DM860A failed (when timed out). | 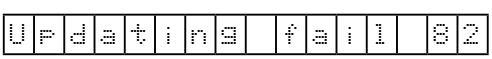 | Turn off and on the power. Updating starts automatically. |
| 83 | Receiving firmware for rewriting serial flash sent by DM860A failed (when an error). | 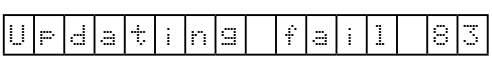 | Turn off and on the power. Updating starts automatically. |
| 84 | Receiving firmware for rewriting serial flash sent by DM860A failed (when a Check Sum error). | 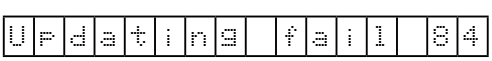 | Turn off and on the power. Updating starts automatically. |
| 85 | Receiving firmware for rewriting serial flash sent by DM860A failed (when invalid data was received). | 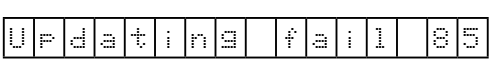 | Turn off and on the power. Updating starts automatically. |
| 86 | The data verification was invalid after serial flash was rewritten. | 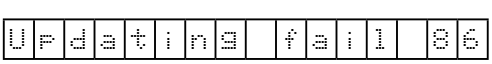 | Turn off and on the power. Updating starts automatically. |
| A0 | Acquisition of (Application Mode) IP address failed before DM860A was rewritten (AutoIP). | | Check the network connection. Carry out the update in an environment that has little network load. |
| A1 | Acquisition of (Application Mode) IP address failed before DM860A was rewritten (when timed out). | 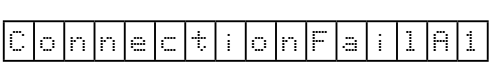 | Check the network connection. Carry out the update in an environment that has little network load. |

| Error Code | Details of Error code | Display | Coping strategies |
|---|---|---|---|
| A2 | Invalid login via DPMS access was notified when DM860A related firmware was rewritten (Application Mode). | | Check the network connection.<br>Carry out the update in an environment that has little network load. |
| A3 | Line congestion via DPMS access was notified when DM860A related firmware was rewritten (Application Mode). | 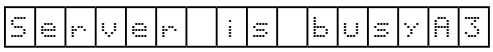 | Check the network connection.<br>Carry out the update in an environment that has little network load. |
| A4 | Connection failure via DPMS access was notified when DM860A related firmware was rewritten (Application Mode). | 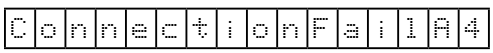 | Check the network connection.<br>Carry out the update in an environment that has little network load. |
| A6 | Firmware data error message was received after DPMS login when DM860A related firmware was rewritten (Application Mode). | 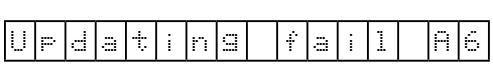 | Turn off and on the power.<br>Updating starts automatically.<br>Carry out the update in an environment that has little network load. |
| A7 | When DM860A related firmware was rewritten (Application Mode), request was made for firmware data after DPMS login but it timed out. |  | Turn off and on the power.<br>Updating starts automatically.<br>Carry out the update in an environment that has little network load. |
| AE | Firmware download error message received (when download fails) when DM860A related firmware was rewritten (Boot Loader Mode). |  | Turn off and on the power.<br>Updating starts automatically.<br>Carry out the update in an environment that has little network load. |
| AF | Firmware download error message received (line congestion) when DM860A related firmware was rewritten (Boot Loader Mode). |  | Turn off and on the power.<br>Updating starts automatically.<br>Carry out the update in an environment that has little network load. |
| B0 | Firmware download error message received (connection failure) when DM860A related firmware was rewritten (Boot Loader Mode). | | Turn off and on the power.<br>Updating starts automatically.<br>Carry out the update in an environment that has little network load. |
| B1 | Firmware download error message. (Timeout failure) | | Turn off and on the power.<br>Updating starts automatically.<br>Carry out the update in an environment that has little network load. |
| B2 | Error message received when DM860A related firmware was rewritten. | 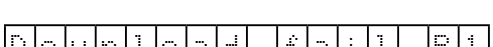 | Turn off and on the power.<br>Updating starts automatically.<br>Carry out the update in an environment that has little network load. |
| B3 | Firmware writing error message. (Timeout failure ) |  | Turn off and on the power.<br>Updating starts automatically.<br>Carry out the update in an environment that has little network load. |
| B4 | Mode change failure of DM860A. (Boot Loader Mode) |  | Reset and update again. |
| B5 | Mode change failure of DM860A. (Application Mode) |  | Reset and update again. |

### Device display during firmware update

Display of target device during firmware update.

| Target device | Display | Error code when an error occurs |
|---|---|---|
| Main | 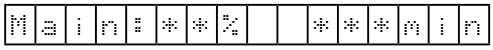 | 08 - 0C<br>10 - 15<br>22 - 24<br>36 - 3E |
| Audio PLD | 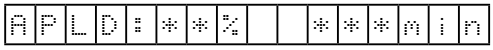 | 50 - 52<br>54 - 58<br>5A - 61 |
| DSP | 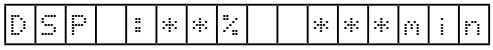 | 50 - 52<br>54 - 58<br>5A - 61 |
| GUI Serial Flash | 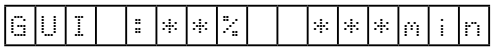 | 50 - 52<br>54 - 58<br>5A - 61<br>80 - 86 |
| DM860A Boot Loader | 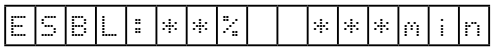 | A0 - A4<br>A6 - A7<br>AE - B5 |
| DM860A Image | | A0 - A4<br>A6 - A7<br>AE - B5 |
| DM860A Image (Emergency Mode) | 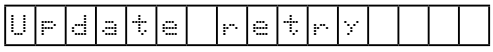 | – |

## Confirming the firmware's number after upgraded

After updating the firmware, check the version. Refer to "**1. µcom/DSP Version display mode**" (24 page).

## 3. How to update by USB Memory

You can update the firmware by downloading the latest version with USB Memory.

### 3.1. Connecting to the Network

(1) Requirements

- The USB memory device format should be set to FAT16 or FAT32.
- USB memory devices will not work via a USB hub.
- It is not possible to use this unit by connecting the unit's USB port to a PC via a USB cable.
- Do not use an extension cable when connecting a USB memory device.
  This may cause radio interference.

### 3.2. Unzip Download File

Pleases unzip the downloaded file on PC.

| AVRE400E3 / X2000 | USB_AVR-E400E3_000100640700-0001.zip |
|---|---|

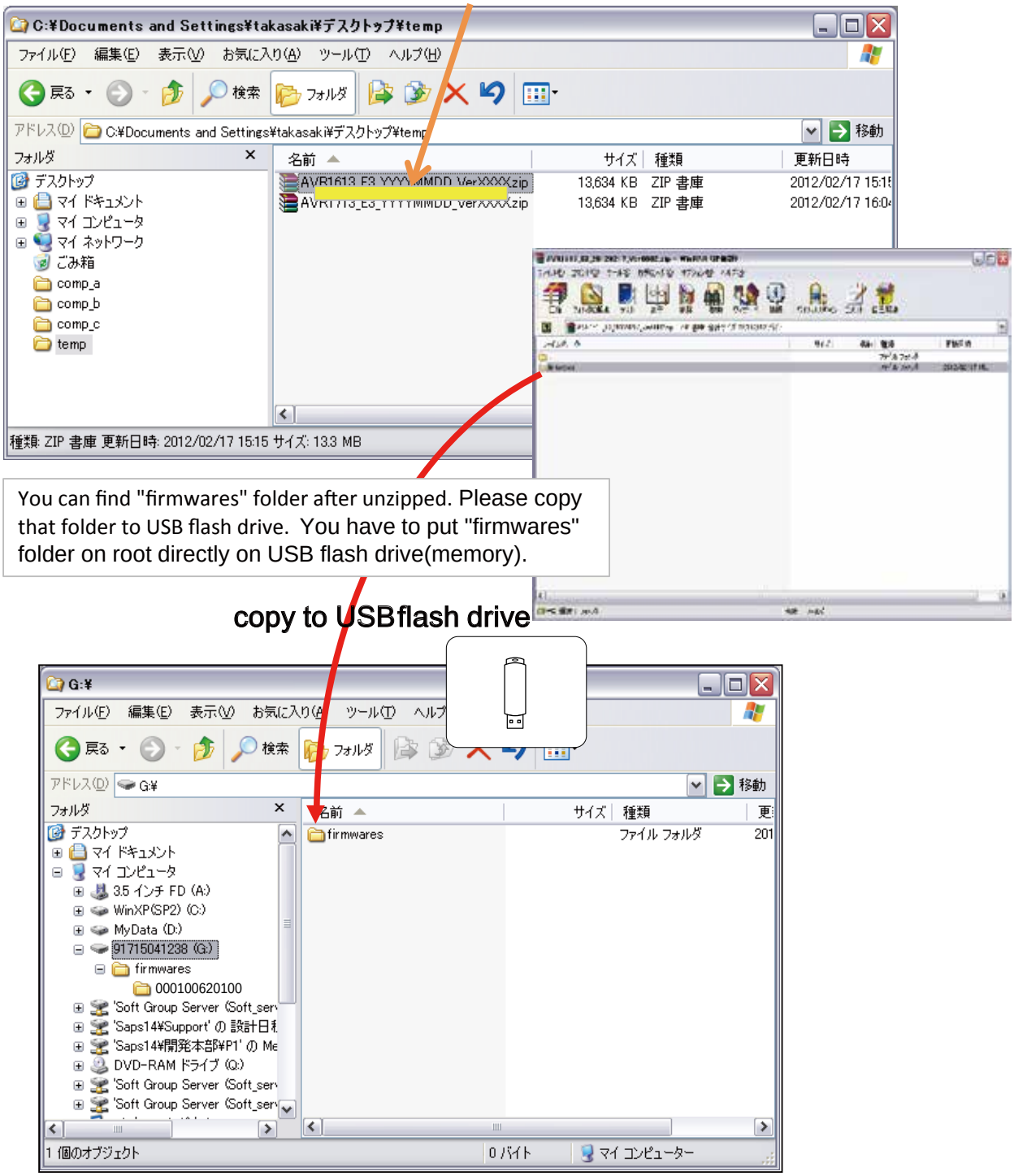

**USB location is below**

USB memory root

| Model Name | Model Area | Product ID |
|---|---|---|
| AVRE400E3 | North America (E3) | 000100640700 |
| AVRX2000E3 | North America (E3) | 000100640100 |
| AVRX2000E2/E1 | Europe (E2) / Singapore(E1) | 000100640200 |
| AVRX2000E1C | China (E1C) | 000100640500 |

+ firmwares
  + 000100640700
    + APLD.bin
    + DSP.bin
    + enc_update.xml
    + GUI.bin
    + IMG.bcd
    + MAIN.bin
    + SBL.bcd

## 3.4. Insert the USB memory into a USB port

**NOTE**: Please UNPLUG LAN cable from the unit during update.

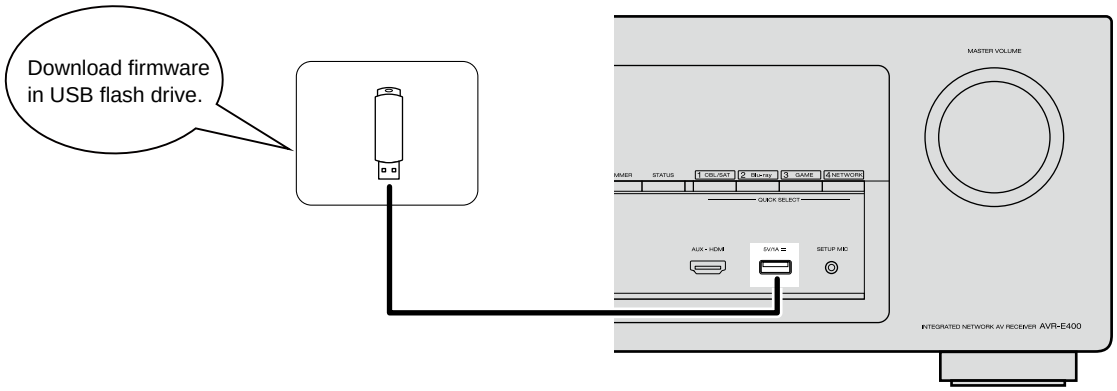

### 3.5. Start update

Turn on the power of this unit in the "STATUS" + "OPTION" button.

### 3.6. "USB Update Start" on FL Display

After arround half minutes, FL display shows the following message.

FL Display

| | | | | | | | | | | | | | | | |
|---|---|---|---|---|---|---|---|---|---|---|---|---|---|---|---|
| Upper | * | F | I | R | M | W | A | R | E | | U | P | D | A | T | E |
| Lower | U | S | B | | U | p | d | a | t | e | | S | t | a | r | t |

### 3.7. Push "ENTER" key on RC or Main unit

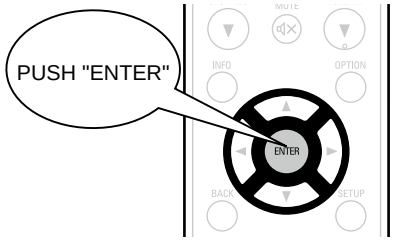


Then start Firmware Update.

FL Display

| | | | | | | | | | | | | | | | |
|---|---|---|---|---|---|---|---|---|---|---|---|---|---|---|---|
| Upper | P | l | e | a | s | e | | w | a | i | t | . | . | . | | |
| Lower | U | p | d | a | t | e | F | i | l | e | C | h | e | c | k | |

### 3.8. Finish firmware update

FL display shows the following message.

FL Display

| | | | | | | | | | | | | | | | |
|---|---|---|---|---|---|---|---|---|---|---|---|---|---|---|---|
| Upper | F | i | r | m | | U | p | d | a | t | e | | | | | |
| Lower | U | p | d | a | t | i | n | g | C | o | m | p | l | e | t | e |

--- Cautions on Firmware Update ---

- Do not remove a USB memory until updating is completed.
- Do not turn off the power until updating is completed.
  Approximately 1 hour is required for the updating procedure to be completed.
  Once updating starts, normal operations on the this unit cannot be performed until updating is completed. Also, setting items of the GUI menu of this unit or setting items of the image adjustment may be initialized.
  Note down the settings before updating, and set them again after updating.

## 3.9. About the error code

See the table below for error codes and details of faults when the firmware is updated through USB memory.

| Error Code | Details of Error code | Display | Coping strategies |
|---|---|---|---|
| 01 | Unable to detect USB. | 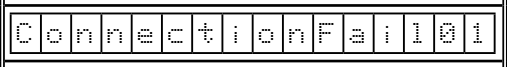 | Disconnect and connect the USB memory. |
| 02 | No FirmwareFile in USB. | | Make sure that the FirmwareFile is in the USB memory. |
| 03 | FirmwareFile in USB for unsupported Model name/area | | Check the supported Model name/ area for the FirmwareFile. |
| 04 | Failed to obtain individual Firmware information. | | Start the USB Update again. |
| 05 | TimeOut while obtaining individual Firmware information | | Start the USB Update again. |
| 06 | Failed to obtain entire Firmware information. | | Start the USB Update again. |
| 07 | TimeOut while obtaining entire Firmware information | | Start the USB Update again. |
| 08 | Error notification received while requesting FirmwareInfo. | 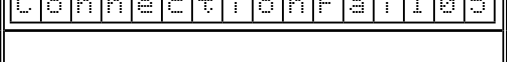 | This unit automatically retries several times. Wait until the FL display stops. If the FL display stops at the Error display, press and hold the "Power operation (⏻)" button for five seconds. |
| 09 | TimeOut while obtaining Firmware information | 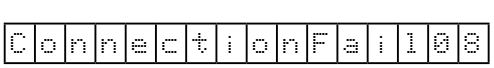 | This unit automatically retries several times. Wait until the FL display stops. If the FL display stops at the Error display, press and hold the "Power operation (⏻)" button for five seconds. |
| 0A | Unable to detect USB for FirmwareDownload. |  | Disconnect and connect the USB memory. |
| 0B | No FirmwareFile for FirmwareDownload. | 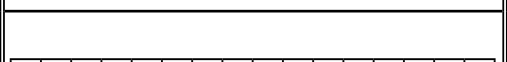 | Disconnect and connect the USB memory. |
| 0D | Received value with invalid PackageVersion. | 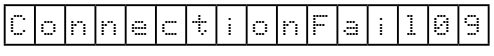 | This unit automatically retries several times. Wait until the FL display stops. If the FL display stops at the Error display, press and hold the "Power operation (⏻)" button for five seconds. |
| 10 | No UpdatePacket received from DM860A (TimeOut). | | This unit automatically retries several times. Wait until the FL display stops. If the FL display stops at the Error display, press and hold the "Power operation (⏻)" button for five seconds. |
| 11 | Abnormal data in UpdatePacket received from DM860A (FormatError). | | This unit automatically retries several times. Wait until the FL display stops. If the FL display stops at the Error display, press and hold the "Power operation (⏻)" button for five seconds. |
| 12 | Abnormal data in UpdatePacket received from DM860A (CheckSumError). | 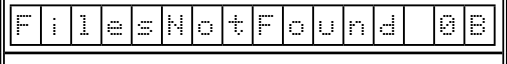 | This unit automatically retries several times. Wait until the FL display stops. If the FL display stops at the Error display, press and hold the "Power operation (⏻)" button for five seconds. |
| 13 | BlockErase failed before rewriting Main. |  | This unit automatically retries several times. Wait until the FL display stops. If the FL display stops at the Error display, press and hold the "Power operation (⏻)" button for five seconds. |
| 14 | BlockWrite failed while rewriting Main. | 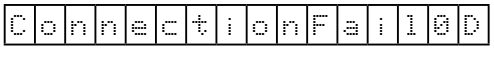 | This unit automatically retries several times. Wait until the FL display stops. If the FL display stops at the Error display, press and hold the "Power operation (⏻)" button for five seconds. |
| 15 | Error in Verify after rewriting Main (CheckSumError). | 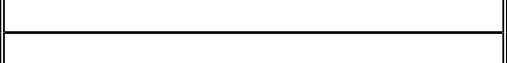 | This unit automatically retries several times. Wait until the FL display stops. If the FL display stops at the Error display, press and hold the "Power operation (⏻)" button for five seconds. |
| 20 | Unable to detect USB after SBLMode. | 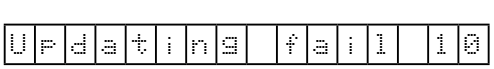 | Disconnect and connect the USB memory. |

| Error Code | Details of Error code | Display | Coping strategies |
|---|---|---|---|
| 21 | No FirmwareFile in USB after SBLMode. | FilesNotFound 21 | Disconnect and connect the USB memory. |
| 22 | FirmwareFile in USB after SBLMode for unsupported Model name/area | NotMatchFirm 22 | Check the supported Model name/ area for the FirmwareFile. |
| 23 | Failed to obtain entire Firmware information after SBLMode. | ConnectionFai123 | Disconnect and connect the USB memory. |
| 24 | TimeOut while obtaining entire Firmware information after SBLMode | ConnectionFai124 | This unit automatically retries several times. Wait until the FL display stops. If the FL display stops at the Error display, press and hold the "Power operation (⏻)" button for five seconds. |
| 25 | Failed to transit to SBLMode. | ConnectionFai125 | This unit automatically retries several times. Wait until the FL display stops. If the FL display stops at the Error display, press and hold the "Power operation (⏻)" button for five seconds. |
| 26 | TimeOut in Download (writing to SDRAM) for FirmwareDownload | Download fail 26 | This unit automatically retries several times. Wait until the FL display stops. If the FL display stops at the Error display, press and hold the "Power operation (⏻)" button for five seconds. |
| 27 | Failed to write to EEPROM after SBLMode. | ConnectionFai127 | This unit automatically retries several times. Wait until the FL display stops. If the FL display stops at the Error display, press and hold the "Power operation (⏻)" button for five seconds. |
| 36 | Unable to detect USB. | ConnectionFai136 | This unit automatically retries several times. Wait until the FL display stops. If the FL display stops at the Error display, press and hold the POWER button for five seconds. |
| 37 | No FirmwareFile in USB. | FilesNotFound 37 | This unit automatically retries several times. Wait until the FL display stops. If the FL display stops at the Error display, press and hold the "Power operation (⏻)" button for five seconds. |
| 38 | FirmwareFile in USB for unsupported Model name/area | NotMatchFirm 38 | This unit automatically retries several times. Wait until the FL display stops. If the FL display stops at the Error display, press and hold the "Power operation (⏻)" button for five seconds. |
| 39 | TimeOut in USBCheck | ConnectionFai139 | This unit automatically retries several times. Wait until the FL display stops. If the FL display stops at the Error display, press and hold the "Power operation (⏻)" button for five seconds. |
| 3A | Unable to detect USB for FirmwareDownload. | ConnectionFai13A | This unit automatically retries several times. Wait until the FL display stops. If the FL display stops at the Error display, press and hold the "Power operation (⏻)" button for five seconds. |
| 3B | No FirmwareFile for FirmwareDownload. | FilesNotFound 3B | This unit automatically retries several times. Wait until the FL display stops. If the FL display stops at the Error display, press and hold the "Power operation (⏻)" button for five seconds. |
| 3F | Failed to transit to SBLMode. | ConnectionFai13F | This unit automatically retries several times. Wait until the FL display stops. If the FL display stops at the Error display, press and hold the "Power operation (⏻)" button for five seconds. |
| 50 | Unable to detect USB. | ConnectionFai150 | This unit automatically retries several times. Wait until the FL display stops. If the FL display stops at the Error display, press and hold the "Power operation (⏻)" button for five seconds. |

| Error Code | Details of Error code | Display | Coping strategies |
|---|---|---|---|
| 51 | No FirmwareFile in USB. | 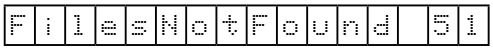 | This unit automatically retries several times. Wait until the FL display stops. If the FL display stops at the Error display, press and hold the "Power operation (⏻)" button for five seconds. |
| 52 | FirmwareFile in USB for unsupported Model name/area | 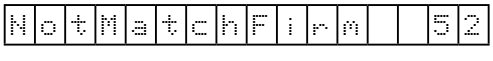 | This unit automatically retries several times. Wait until the FL display stops. If the FL display stops at the Error display, press and hold the "Power operation (⏻)" button for five seconds. |
| 54 | Error notification received while requesting FirmwareInfo. | 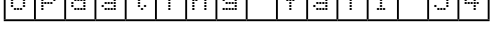 | This unit automatically retries several times. Wait until the FL display stops. If the FL display stops at the Error display, press and hold the "Power operation (⏻)" button for five seconds. |
| 55 | TimeOut while obtaining Firmware |  | This unit automatically retries several times. Wait until the FL display stops. If the FL display stops at the Error display, press and hold the "Power operation (⏻)" button for five seconds. |
| 56 | Unable to detect USB for FirmwareDownload. | 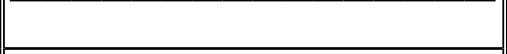 | This unit automatically retries several times. Wait until the FL display stops. If the FL display stops at the Error display, press and hold the "Power operation (⏻)" button for five seconds. |
| 57 | No FirmwareFile for FirmwareDownload. | 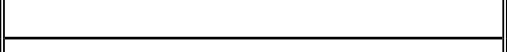 | This unit automatically retries several times. Wait until the FL display stops. If the FL display stops at the Error display, press and hold the "Power operation (⏻)" button for five seconds. |
| 5A | Invalid DeviceID in response or no response from Sub for C command. | 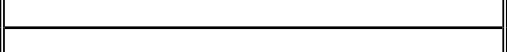 | This unit automatically retries several times. Wait until the FL display stops. If the FL display stops at the Error display, press and hold the "Power operation (⏻)" button for five seconds. |
| 5B | NACK received in response or no response from Sub for L command. | 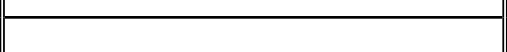 | This unit automatically retries several times. Wait until the FL display stops. If the FL display stops at the Error display, press and hold the "Power operation (⏻)" button for five seconds. |
| 5C | No UpdatePacket received from DM860A (TimeOut). | 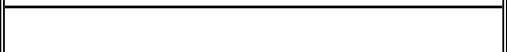 | This unit automatically retries several times. Wait until the FL display stops. If the FL display stops at the Error display, press and hold the "Power operation (⏻)" button for five seconds. |
| 5D | Abnormal data in UpdatePacket received from DM860A (FormatError). |  | This unit automatically retries several times. Wait until the FL display stops. If the FL display stops at the Error display, press and hold the "Power operation (⏻)" button for five seconds. |
| 5E | Abnormal data in UpdatePacket received from DM860A (CheckSumError). | 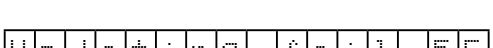 | This unit automatically retries several times. Wait until the FL display stops. If the FL display stops at the Error display, press and hold the "Power operation (⏻)" button for five seconds. |
| 5F | Abnormal data in UpdatePacket received from DM860A (DataLength/DataNo). | 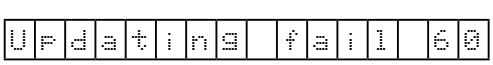 | This unit automatically retries several times. Wait until the FL display stops. If the FL display stops at the Error display, press and hold the "Power operation (⏻)" button for five seconds. |
| 60 | NACK received in response or no response from Sub for P command. | 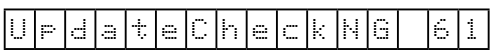 | This unit automatically retries several times. Wait until the FL display stops. If the FL display stops at the Error display, press and hold the "Power operation (⏻)" button for five seconds. |
| 61 | Mismatched CheckSum in response or no response from Sub for I command. | 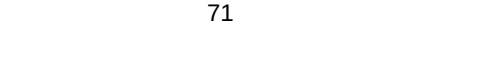 | This unit automatically retries several times. Wait until the FL display stops. If the FL display stops at the Error display, press and hold the "Power operation (⏻)" button for five seconds. |

| Error Code | Details of Error code | Display | Coping strategies |
|---|---|---|---|
| 62 | Failed to start up Sub in PowerOn sequence during Update. | 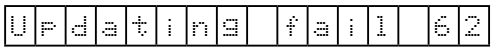 | This unit automatically retries several times. Wait until the FL display stops. If the FL display stops at the Error display, press and hold the "Power operation (⏻)" button for five seconds. |
| 63 | Failed to transit to ApplicationMode. | 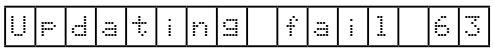 | This unit automatically retries several times. Wait until the FL display stops. If the FL display stops at the Error display, press and hold the "Power operation (⏻)" button for five seconds. |
| 64 | Failed to transit to BootLoaderMode. | 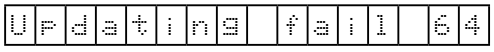 | This unit automatically retries several times. Wait until the FL display stops. If the FL display stops at the Error display, press and hold the "Power operation (⏻)" button for five seconds. |
| 80 | WriteEnableLatchBit not set in Read after issuing WREN command. | 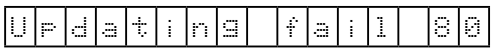 | This unit automatically retries several times. Wait until the FL display stops. If the FL display stops at the Error display, press and hold the "Power operation (⏻)" button for five seconds. |
| 81 | BlockErase failed in Read after issuing BE command. | 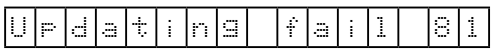 | This unit automatically retries several times. Wait until the FL display stops. If the FL display stops at the Error display, press and hold the "Power operation (⏻)" button for five seconds. |
| 82 | No UpdatePacket received from DM860A (TimeOut). | 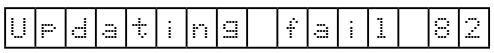 | This unit automatically retries several times. Wait until the FL display stops. If the FL display stops at the Error display, press and hold the "Power operation (⏻)" button for five seconds. |
| 83 | Abnormal data in UpdatePacket received from DM860A (FormatError). | 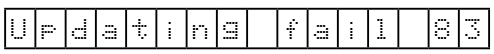 | This unit automatically retries several times. Wait until the FL display stops. If the FL display stops at the Error display, press and hold the "Power operation (⏻)" button for five seconds. |
| 84 | Abnormal data in UpdatePacket received from DM860A (CheckSumError). | 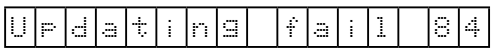 | This unit automatically retries several times. Wait until the FL display stops. If the FL display stops at the Error display, press and hold the "Power operation (⏻)" button for five seconds. |
| 85 | Abnormal data in UpdatePacket received from DM860A (DataLength/DataNo). | 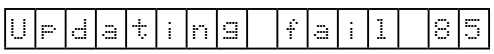 | This unit automatically retries several times. Wait until the FL display stops. If the FL display stops at the Error display, press and hold the "Power operation (⏻)" button for five seconds. |
| 86 | Mismatched CheckSum in CheckSum comparison after rewriting. | 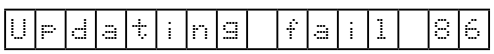 | This unit automatically retries several times. Wait until the FL display stops. If the FL display stops at the Error display, press and hold the "Power operation (⏻)" button for five seconds. |
| A2 | Unable to detect USB. | 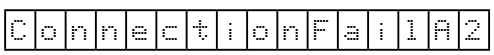 | This unit automatically retries several times. Wait until the FL display stops. If the FL display stops at the Error display, press and hold the "Power operation (⏻)" button for five seconds. |
| A3 | No FirmwareFile in USB. | 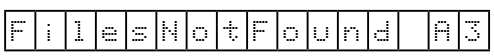 | This unit automatically retries several times. Wait until the FL display stops. If the FL display stops at the Error display, press and hold the "Power operation (⏻)" button for five seconds. |
| A4 | FirmwareFile in USB for unsupported Model name/area | 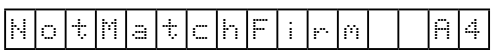 | This unit automatically retries several times. Wait until the FL display stops. If the FL display stops at the Error display, press and hold the "Power operation (⏻)" button for five seconds. |
| A6 | Error notification received while requesting FirmwareInfo. | 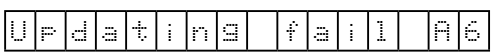 | This unit automatically retries several times. Wait until the FL display stops. If the FL display stops at the Error display, press and hold the "Power operation (⏻)" button for five seconds. |

| Error Code | Details of Error code | Display | Coping strategies |
|---|---|---|---|
| A7 | TimeOut while obtaining Firmware | 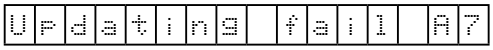 | This unit automatically retries several times. Wait until the FL display stops. If the FL display stops at the Error display, press and hold the "Power operation (⏻)" button for five seconds. |
| AE | Unable to detect USB for FirmwareDownload. | 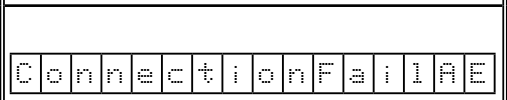 | This unit automatically retries several times. Wait until the FL display stops. If the FL display stops at the Error display, press and hold the "Power operation (⏻)" button for five seconds. |
| AF | No FirmwareFile for FirmwareDownload. | | This unit automatically retries several times. Wait until the FL display stops. If the FL display stops at the Error display, press and hold the "Power operation (⏻)" button for five seconds. |
| B1 | TimeOut in Download (writing to SDRAM) for FirmwareDownload | 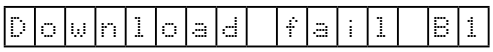 | This unit automatically retries several times. Wait until the FL display stops. If the FL display stops at the Error display, press and hold the "Power operation (⏻)" button for five seconds. |
| B2 | Error notification received after rewriting DM860A Firm. | 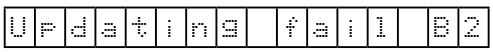 | This unit automatically retries several times. Wait until the FL display stops. If the FL display stops at the Error display, press and hold the "Power operation (⏻)" button for five seconds. |
| B3 | Error in FirmwareUpdate (TimeOut). | 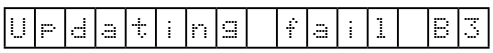 | This unit automatically retries several times. Wait until the FL display stops. If the FL display stops at the Error display, press and hold the "Power operation (⏻)" button for five seconds. |
| B4 | Failed to transit to BootLoaderMode. | 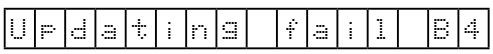 | This unit automatically retries several times. Wait until the FL display stops. If the FL display stops at the Error display, press and hold the "Power operation (⏻)" button for five seconds. |
| B5 | Failed to transit to ApplicationMode. | 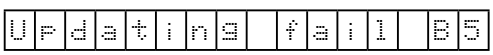 | This unit automatically retries several times. Wait until the FL display stops. If the FL display stops at the Error display, press and hold the "Power operation (⏻)" button for five seconds. |

## Confirming the firmware's number after upgraded

After updating the firmware, check the version. Refer to "**1. µcom/DSP Version display mode**" (24 page).

# ADJUSTMENT

## Audio Section

### Adjusting Idling Current

Required measurement equipment: DC Voltmeter

1. Preparation

(1) Temperature should be at avoid direct blow from an air conditioner or an electric fan and humidity should be moderate, and place the set at normal usage environment.
15 °C ~ 30 °C (59 °F ~ 86 °F)

(2) Presetting

- POWER (Power source switch) STANDBY
- SPEAKER (Speaker terminal) No load

(Do not connect speaker, dummy resistor, etc.)

2. Adjustment

(1) Remove the top cover and set VR401, VR402, VR403, VR404, VR405, VR406, VR407 on at fully 7CH AMP UNIT at fully counterclockwise (↺) position.

(2) Connect DC Voltmeter to test points (FRONT-Lch: TP401, FRONT-Rch: TP402, CENTER ch: TP403, SURROUND-Lch: TP404, SURROUND-Rch: TP405, SURROUND-BACK Lch: TP406, SURROUND-BACK Rch: TP407.

(3) Connect the power cord to AC Line, and set the power switch to "ON".

(4) Presetting.

MASTER VOLUME : "---" counterclockwise (↺ min.)
SPEAKER (Speaker terminal) : No load
(Do not connect speaker, dummy resistor, etc.)
MODE : MCH STEREO
FUNCTION : DVD

(5) Within 2 minutes after the power on, turn VR401 clockwise (↻) to adjust the TEST POINT voltage to 6.5mV ± 0.5mV DC.

(6) After 10 minutes from the preset above, turn VR401 to set the voltage to 8.0mV ± 0.5mV DC.

(7) Adjust the Variable Resistors of each channel in the same way.

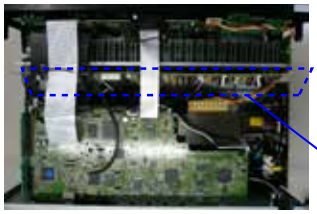


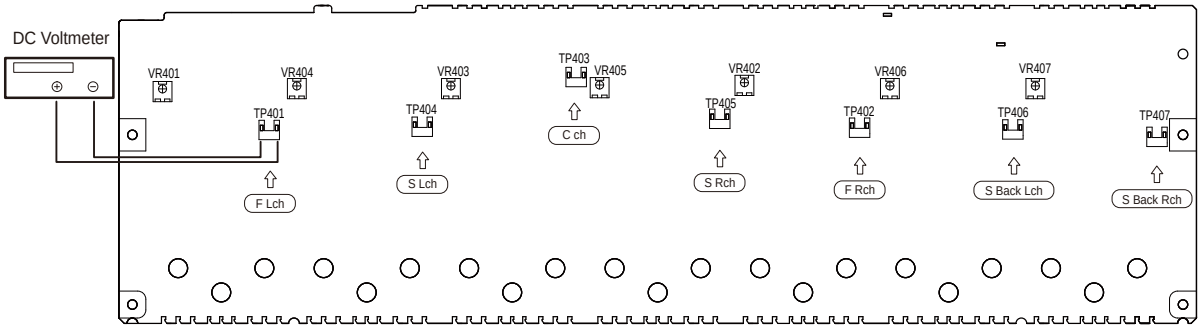

This unit is equipped with a sophisticated digital signal processing circuit that lets you play your favorite movie and music sources and listen to them with a wide range of surround sound mode choices.

## Sound modes and surround parameters

This table shows the speakers that can be used in each sound mode and the surround parameters adjustable in each sound mode.

## Symbols in the table

○ This indicates the audio output channels or surround parameters that can be set.

◎ This indicates the audio output channels. The output channels depend on the settings of “Speaker Config.”

| Sound Mode | Channel output | | | | | | Surround Parameter | | | | |
|---|---|---|---|---|---|---|---|---|---|---|---|
| | Front L/R | Center | Surround L/R | Surround back L/R | Front height L/R | Subwoofer | Cinema EQ | Loudness Management ∗2 | Dynamic Compression ∗3 | Low Frequency Effects ∗4 | Delay Time |
| DIRECT/PURE DIRECT (2-channel) ∗1 | ○ | | | | | ◎∗5 | | ○ | ○ | | |
| DIRECT/PURE DIRECT (Multi-channel)∗1 | ○ | ◎ | ◎ | ◎∗6 | ◎∗6 | ◎ | | ○ | ○ | ○ | |
| STEREO | ○ | | | | | ◎ | | ○ | ○ | ○ | |
| MULTI CH IN | ○ | ◎ | ◎ | ◎ | ◎∗7 | ◎ | ○∗8 | | | ○ | |
| DOLBY PRO LOGIC IIz | ○ | ◎ | ◎ | | ◎∗7 | ◎ | ○ | ○ | ○ | | |
| DOLBY PRO LOGIC IIx | ○ | ◎ | ◎ | ◎ | | ◎ | ○∗9 | ○ | ○ | | |
| DOLBY PRO LOGIC II | ○ | ◎ | ◎ | | | ◎ | ○∗10 | ○ | ○ | | |
| DTS NEO:6 | ○ | ◎ | ◎ | ◎ | | ◎ | ○∗9 | ○ | ○ | | |
| DOLBY DIGITAL | ○ | ◎ | ◎ | ◎ | ◎∗7 | ◎ | ○∗8 | | | ○ | |
| DOLBY DIGITAL Plus | ○ | ◎ | ◎ | ◎ | ◎∗7 | ◎ | ○∗8 | | | ○ | |
| DOLBY TrueHD | ○ | ◎ | ◎ | ◎ | ◎∗7 | ◎ | ○∗8 | ○ | ○ | ○ | |
| DTS SURROUND | ○ | ◎ | ◎ | ◎ | ◎∗7 | ◎ | ○∗8 | | | ○ | |
| DTS 96/24 | ○ | ◎ | ◎ | ◎ | ◎∗7 | ◎ | ○∗8 | | | ○ | |
| DTS-HD | ○ | ◎ | ◎ | ◎ | ◎∗7 | ◎ | ○∗8 | | | ○ | |
| DTS Express | ○ | ◎ | ◎ | ◎ | ◎∗7 | ◎ | ○∗8 | | | ○ | |
| MULTI CH STEREO | ○ | ◎ | ◎ | ◎ | ◎ | ◎ | | ○ | ○ | ○ | |
| ROCK ARENA | ○ | ◎ | ◎ | ◎ | ◎ | ◎ | | ○ | ○ | ○ | |
| JAZZ CLUB | ○ | ◎ | ◎ | ◎ | ◎ | ◎ | | ○ | ○ | ○ | |
| MONO MOVIE | ○ | ◎ | ◎ | ◎ | ◎ | ◎ | | ○ | ○ | ○ | |
| VIDEO GAME | ○ | ◎ | ◎ | ◎ | ◎ | ◎ | | ○ | ○ | ○ | |
| MATRIX | ○ | ◎ | ◎ | ◎ | ◎ | ◎ | | ○ | ○ | ○ | ○ |
| VIRTUAL | ○ | | | | | ◎ | | ○ | ○ | ○ | |

∗1 During playback in PURE DIRECT mode, the surround parameters are the same as in DIRECT mode.

∗2 This item can be selected when a Dolby TrueHD signal is played.

∗3 This item can be selected when a Dolby Digital or DTS signal is played.

∗4 This item can be selected when a Dolby Digital or DTS signal or DVD-Audio is played.

∗5 Only when “Subwoofer Mode” is set to “LFE+Main” , sound is output from the subwoofer.

∗6 A signal for each channel contained in an input signal is output as audio.

∗7 Audio is output from the front height speaker when the set sound mode name contains “+PLIIz”. For information on how to check the sound mode, see .

∗8 This setting is unavailable when the set sound mode name contains “+PLIIx Music”. For information on how to check the sound mode, see .

∗9 This setting is possible when the sound mode is “PLIIx Cinema” or “DTS NEO:6 Cinema”.

∗10 This setting is possible when the sound mode is “PLII Cinema”.

| Sound Mode | Surround Parameter | | | | | | | Subwoofer | Tone ∗12 | Audyssey | | | Restorer ∗15 |
|---|---|---|---|---|---|---|---|---|---|---|---|---|---|
| | Effect Level | Room Size | Height Gain ∗11 | PRO LOGIC Ⅱ/Ⅱx Music mode only | | | NEO:6 Music mode only | | | MultEQ® ∗13 | Dynamic EQ ∗14 | Dynamic Volume ∗14 | |
| | | | | Panorama | Dimension | Center Width | Center Image | | | | | | |
| DIRECT/PURE DIRECT (2-channel) ∗1 | | | | | | | | ○∗5 | | | | | |
| DIRECT/PURE DIRECT (Multi-channel)∗1 | | | | | | | | ○ | | | | | |
| STEREO | | | | | | | | ○ | ○ | ○ | ○ | ○ | ○ |
| MULTI CH IN | | | ○ | | | | | ○ | ○ | ○ | ○ | ○ | |
| DOLBY PRO LOGIC Ⅱz | | | ○ | | | | | ○ | ○ | ○ | ○ | ○ | ○ |
| DOLBY PRO LOGIC Ⅱx | | | | ○ | ○ | ○ | | ○ | ○ | ○ | ○ | ○ | ○ |
| DOLBY PRO LOGIC Ⅱ | | | | ○ | ○ | ○ | | ○ | ○ | ○ | ○ | ○ | ○ |
| DTS NEO:6 | | | | | | | ○ | ○ | ○ | ○ | ○ | ○ | ○ |
| DOLBY DIGITAL | | | ○ | | | | | ○ | ○ | ○ | ○ | ○ | |
| DOLBY DIGITAL Plus | | | ○ | | | | | ○ | ○ | ○ | ○ | ○ | |
| DOLBY TrueHD | | | ○ | | | | | ○ | ○ | ○ | ○ | ○ | |
| DTS SURROUND | | | ○ | | | | | ○ | ○ | ○ | ○ | ○ | |
| DTS 96/24 | | | ○ | | | | | ○ | ○ | ○ | ○ | ○ | |
| DTS-HD | | | ○ | | | | | ○ | ○ | ○ | ○ | ○ | |
| DTS Express | | | ○ | | | | | ○ | ○ | ○ | ○ | ○ | |
| MULTI CH STEREO | | | | | | | | ○ | ○ | ○ | ○ | ○ | ○ |
| ROCK ARENA | ○ | ○ | | | | | | ○ | ○∗16 | ○ | ○ | ○ | ○ |
| JAZZ CLUB | ○ | ○ | | | | | | ○ | ○ | ○ | ○ | ○ | ○ |
| MONO MOVIE | ○ | ○ | | | | | | ○ | ○ | ○ | ○ | ○ | ○ |
| VIDEO GAME | ○ | ○ | | | | | | ○ | ○ | ○ | ○ | ○ | ○ |
| MATRIX | | | | | | | | ○ | ○ | ○ | ○ | ○ | ○ |
| VIRTUAL | | | | | | | | ○ | ○ | ○ | ○ | ○ | ○ |

∗1 During playback in PURE DIRECT mode, the surround parameters are the same as in DIRECT mode.
∗5 Only when “Subwoofer Mode” is set to “LFE+Main” , sound is output from the subwoofer.
∗11 This setting is available when the set sound mode name contains “+PLⅡz”. For information on how to check the sound mode, see .
∗12 This item cannot be set when “Dynamic EQ” is set to “On”.
∗13 For HD Audio whose sampling frequency of an input signal is more than 96 kHz, this sound parameter cannot be set.
∗14 This item cannot be set when “MultEQ®” is set to “Off” or “Graphic EQ”.
∗15 This item can be set when the input signal is analog, PCM 48 kHz or 44.1 kHz.
∗16 In this sound mode, bass is +6 dB, and treble is +4 dB (Default).

## Types of input signals, and corresponding sound modes

This table shows the input signal that can be played in each sound mode. Check the audio signal of the input source then select the sound mode.

## Symbols in the table

● This indicates the default sound mode.
○ This indicates the selectable sound mode.

| Sound Mode | NOTE | Input signal types and formats | | | | | | | | | | | | | | | |
|---|---|---|---|---|---|---|---|---|---|---|---|---|---|---|---|---|---|
| | | ANALOG | PCM | | DTS-HD | | DTS | | | | | DOLBY | | DOLBY DIGITAL | | | |
| | | | PCM (Multi-channel) | PCM (2-channel) | DTS-HD Master Audio | DTS-HD High Resolution Audio | DTS EXPRESS | DTS ES DSCRT (With Flag) | DTS ES MTRX (With Flag) | DTS (5.1-channel) | DTS 96/24 | DOLBY TrueHD | DOLBY DIGITAL Plus | DOLBY DIGITAL EX (With Flag) | DOLBY DIGITAL EX (With no Flag) | DOLBY DIGITAL (5.1-channel) | DOLBY DIGITAL (2-channel) |
| DTS SURROUND | | | | | | | | | | | | | | | | | |
| DTS-HD MSTR | | | | | ● | | | | | | | | | | | | |
| DTS-HD HI RES | | | | | | ● | | | | | | | | | | | |
| DTS ES DSCRT6.1 | ∗1∗2 | | | | | | | ● | | | | | | | | | |
| DTS ES MTRX6.1 | ∗1∗2 | | | | | | | | ● | | | | | | | | |
| DTS SURROUND | | | | | | | | ○ | ○ | ● | | | | | | | |
| DTS 96/24 | | | | | | | | | | | ● | | | | | | |
| DTS (–HD) + PLⅡx CINEMA | ∗1∗3 | | | | ○ | ○ | ○ | | | ○ | ○ | | | | | | |
| DTS (–HD) + PLⅡx MUSIC | ∗1∗2 | | | | ○ | ○ | ○ | | | ○ | ○ | | | | | | |
| DTS (–HD) + PLⅡz | ∗1∗4 | | | | ○ | ○ | ○ | ○ | ○ | ○ | ○ | | | | | | |
| DTS EXPRESS | | | | | | | ● | | | | | | | | | | |
| DTS (–HD) + NEO:6 | ∗1∗2 | | | | ○ | ○ | ○ | | | ○ | ○ | | | | | | |
| DTS NEO:6 CINEMA | | ○ | | ○ | | | | | | | | | | | | | ○ |
| DTS NEO:6 MUSIC | | ○ | | ○ | | | | | | | | | | | | | ○ |
| DOLBY SURROUND | | | | | | | | | | | | | | | | | |
| DOLBY TrueHD | | | | | | | | | | | | ● | | | | | |
| DOLBY DIGITAL+ | | | | | | | | | | | | | ● | | | | |
| DOLBY DIGITAL EX | ∗1∗2 | | | | | | | | | | | | | ○ | ○ | ○ | |
| DOLBY (D+) (HD) +EX | ∗1∗2 | | | | | | | | | | | ○ | ○ | | | | |
| DOLBY DIGITAL | | | | | | | | | | | | | | ○ | ● | ● | |
| DOLBY (D) (D+) (HD) +PLⅡx CINEMA | ∗1∗3 | | | | | | | | | | | ○ | ○ | ● | ○ | ○ | |
| DOLBY (D) (D+) (HD) +PLⅡx MUSIC | ∗1∗2 | | | | | | | | | | | ○ | ○ | ○ | ○ | ○ | |
| DOLBY (D) (D+) (HD) +PLⅡz | ∗4 | | | | | | | | | | | ○ | ○ | ○ | ○ | ○ | |
| DOLBY PRO LOGIC Ⅱx CINEMA | ∗1∗2 | ○ | | ○ | | | | | | | | | | | | | ○ |
| DOLBY PRO LOGIC Ⅱx MUSIC | ∗1∗2 | ○ | | ○ | | | | | | | | | | | | | ○ |
| DOLBY PRO LOGIC Ⅱx GAME | ∗1∗2 | ○ | | ○ | | | | | | | | | | | | | ○ |
| DOLBY PRO LOGIC Ⅱz | ∗1∗4 | ○ | | ○ | | | | | | | | | | | | | ○ |
| DOLBY PRO LOGIC Ⅱ CINEMA | | ○ | | ○ | | | | | | | | | | | | | ○ |
| DOLBY PRO LOGIC Ⅱ MUSIC | | ○ | | ○ | | | | | | | | | | | | | ○ |
| DOLBY PRO LOGIC Ⅱ GAME | | ○ | | ○ | | | | | | | | | | | | | ○ |

∗1 This sound mode can be selected when “Amp Assign” is set to “Surround Back”.
∗2 If “Speaker Config.” – “Surr. Back” is set to “None”, this sound mode cannot be selected.
∗3 If “Speaker Config.” – “Surr. Back” is set to “1spkr” or “None”, this sound mode cannot be selected.
∗4 If “Speaker Config.” – “Front Height” is set to “None”, this sound mode cannot be selected.

| Sound Mode | NOTE | Input signal types and formats | | | | | | | | | | | | | | | | |
|---|---|---|---|---|---|---|---|---|---|---|---|---|---|---|---|---|---|---|
| | | ANALOG | PCM | | DTS-HD | | DTS | | | | | DOLBY | | DOLBY DIGITAL | | | | |
| | | | PCM (Multi-channel) | PCM (2-channel) | DTS-HD Master Audio | DTS-HD High Resolution Audio | DTS EXPRESS | DTS ES DSCRT (With Flag) | DTS ES MTRX (With Flag) | DTS (5.1-channel) | DTS 96/24 | DOLBY TrueHD | DOLBY DIGITAL Plus | DOLBY DIGITAL EX (With Flag) | DOLBY DIGITAL EX (With no Flag) | DOLBY DIGITAL (5.1-channel) | DOLBY DIGITAL (2-channel) |
| MULTI CH IN | | | | | | | | | | | | | | | | | | |
| MULTI CH IN | | | ● | | | | | | | | | | | | | | | |
| MULTI CH IN + PLIIx CINEMA | ∗1∗3 | | ○ | | | | | | | | | | | | | | | |
| MULTI CH IN + PLIIx MUSIC | ∗1∗2 | | ○ | | | | | | | | | | | | | | | |
| MULTI CH IN + PLIIz | ∗1∗4 | | ○ | | | | | | | | | | | | | | | |
| MULTI CH IN + Dolby EX | ∗1∗2 | | ○ | | | | | | | | | | | | | | | |
| MULTI CH IN 7.1 | ∗1∗2 | | ● (7.1) | | | | | | | | | | | | | | | |
| DIRECT | | | | | | | | | | | | | | | | | | |
| DIRECT | | ○ | ○ | ○ | ○ | ○ | ○ | ○ | ○ | ○ | ○ | ○ | ○ | ○ | ○ | ○ | ○ | |
| PURE DIRECT | | | | | | | | | | | | | | | | | | |
| PURE DIRECT | | ○ | ○ | ○ | ○ | ○ | ○ | ○ | ○ | ○ | ○ | ○ | ○ | ○ | ○ | ○ | ○ | |
| DSP SIMULATION | | | | | | | | | | | | | | | | | | |
| MULTI CH STEREO | | ○ | ○ | ○ | ○ | ○ | ○ | ○ | ○ | ○ | ○ | ○ | ○ | ○ | ○ | ○ | ○ | |
| ROCK ARENA | | ○ | ○ | ○ | ○ | ○ | ○ | ○ | ○ | ○ | ○ | ○ | ○ | ○ | ○ | ○ | ○ | |
| JAZZ CLUB | | ○ | ○ | ○ | ○ | ○ | ○ | ○ | ○ | ○ | ○ | ○ | ○ | ○ | ○ | ○ | ○ | |
| MONO MOVIE | | ○ | ○ | ○ | ○ | ○ | ○ | ○ | ○ | ○ | ○ | ○ | ○ | ○ | ○ | ○ | ○ | |
| VIDEO GAME | | ○ | ○ | ○ | ○ | ○ | ○ | ○ | ○ | ○ | ○ | ○ | ○ | ○ | ○ | ○ | ○ | |
| MATRIX | | ○ | ○ | ○ | ○ | ○ | ○ | ○ | ○ | ○ | ○ | ○ | ○ | ○ | ○ | ○ | ○ | |
| VIRTUAL | | ○ | ○ | ○ | ○ | ○ | ○ | ○ | ○ | ○ | ○ | ○ | ○ | ○ | ○ | ○ | ○ | |
| STEREO | | | | | | | | | | | | | | | | | | |
| STEREO | | ● | ○ | ● | ○ | ○ | ○ | ○ | ○ | ○ | ○ | ○ | ○ | ○ | ○ | ○ | ○ | |

∗1 This sound mode can be selected when “Amp Assign” is set to “Surround Back”.
∗2 If “Speaker Config.” – “Surr. Back” is set to “None”, this sound mode cannot be selected.
∗3 If “Speaker Config.” – “Surr. Back” is set to “1spkr” or “None”, this sound mode cannot be selected.
∗4 If “Speaker Config.” – “Front Height” is set to “None”, this sound mode cannot be selected.

## Relationship between video signals and monitor output

<table>
<tr><th colspan="6">MAIN ZONE MONITOR OUT</th></tr>
<tr><th rowspan="2">Video Conversion</th><th colspan="3">Input connector</th><th>Output connector</th><th>Menu displayed</th></tr>
<tr><th>HDMI</th><th>COMPONENT</th><th>VIDEO</th><th>HDMI</th><th>HDMI</th></tr>
<tr><td>On</td><td>×</td><td>×</td><td>×</td><td>×</td><td>Only the menu is displayed</td></tr>
<tr><td>On</td><td>×</td><td>×</td><td>○</td><td>○ <VIDEO></td><td>○ (VIDEO)</td></tr>
<tr><td>On</td><td>×</td><td>○</td><td>×</td><td rowspan="2">○ <COMPONENT></td><td rowspan="2">○ (COMPONENT)</td></tr>
<tr><td>On</td><td>×</td><td>○</td><td>○</td></tr>
<tr><td>On</td><td>○</td><td>×</td><td>×</td><td rowspan="4">○ <HDMI></td><td rowspan="4">○ (HDMI)</td></tr>
<tr><td>On</td><td>○</td><td>×</td><td>○</td></tr>
<tr><td>On</td><td>○</td><td>○</td><td>×</td></tr>
<tr><td>On</td><td>○</td><td>○</td><td>○</td></tr>
<tr><td>Off</td><td>×</td><td>×</td><td>×</td><td rowspan="4">×</td><td rowspan="8">Only the menu is displayed</td></tr>
<tr><td>Off</td><td>×</td><td>×</td><td>○</td></tr>
<tr><td>Off</td><td>×</td><td>○</td><td>×</td></tr>
<tr><td>Off</td><td>×</td><td>○</td><td>○</td></tr>
<tr><td>Off</td><td>○</td><td>×</td><td>×</td><td rowspan="4">○ <HDMI></td></tr>
<tr><td>Off</td><td>○</td><td>×</td><td>○</td></tr>
<tr><td>Off</td><td>○</td><td>○</td><td>×</td></tr>
<tr><td>Off</td><td>○</td><td>○</td><td>○</td></tr>
</table>

○ : Video signal input present
× : No video signal input

○ < > : The input signal between the < > marks is output.
× : No video signal output

○ ( ) : Superimposed on the picture indicated in ( ).

The main zone video conversion function is compatible with the following formats: NTSC, PAL, SECAM, NTSC4.43, PAL-N, PAL-M and PAL-60.

NOTE

The status display screen cannot be displayed at a computer's resolution (e.g. VGA) or while certain 3D video contents is being played.
When the menu is operated on a computer's resolution (e.g. VGA) or during playback of certain 3D video content, the playback image switches to the menu screen image.

# Video signal resolution conversion table

When “Video Conversion” is set to “On”, “i/p Scaler” is set to “Analog”, “Analog & HDMI” or “HDMI” are set, the resolution of the input video signal can be converted to a different resolution for output (vpage 82 “Converting input video signals for HD output (Video conversion function)”).
The relationship between the resolution of the convertible video signal and HDMI output resolution is shown in the table below.

| | | HDMI Output | | | | | | |
|---|---|---|---|---|---|---|---|---|
| | Output resolution / Input resolution | 480i/576i∗1 | 480p/576p | 1080i | 720p | 1080p | 1080p 24Hz | 4K∗2 |
| Video input | 480i/576i | ○ | ○ | ○ | ○ | ○ | ○ | ○ |
| Component video input | 480i/576i | ○ | ○ | ○ | ○ | ○ | ○ | ○ |
| | 480p/576p | – | ○ | ○ | ○ | ○ | ○ | ○ |
| | 1080i | – | – | ○ | ○ | ○ | ○ | ○ |
| | 720p | – | – | ○ | ○ | ○ | ○ | ○ |
| | 1080p | – | – | – | – | ○ | ○ | ○ |
| HDMI input | 480i/576i | ○ | ○ | ○ | ○ | ○ | ○ | ○ |
| | 480p/576p | – | ○ | ○ | ○ | ○ | ○ | ○ |
| | 1080i | – | – | ○ | ○ | ○ | ○ | ○ |
| | 720p | – | – | ○ | ○ | ○ | ○ | ○ |
| | 1080p 24Hz | – | – | – | – | ○∗3 | ○∗4 | ○ |
| | 1080p | – | – | – | – | ○ | ○ | ○ |
| | 4K | – | – | – | – | – | – | ○∗5 |

○ The resolution set in “Resolution” in the menu is output.
– Output at the same resolution as the input video signal resolution.
∗1 Only output when “i/p Scaler” in the menu is set to “Off”.
∗2 Output at a resolution of 3840 x 2160 pixels (24/25/30 Hz).
∗3 The resolution set in “Resolution” in the menu is set to “Auto”, and a television that does not support 1080p 24Hz video signals is connected.
∗4 The resolution set in “Resolution” in the menu is set to “Auto”, and a television that supports 1080p 24Hz video signals is connected.
∗5 Output at the same resolution as the input video signal resolution.



NOTE

The 4K, 3D, Computer resolution, “x.v.Color”, sYCC601 color, Adobe RGB color or Adobe YCC601 color input to HDMI is output at the same resolution as the input video signal.
When “Video Mode” in the menu is set to “Game” or “Auto” and game contents are played, the same resolution as the input video signal is output.
When “Resolution” in the menu is set to “Auto”, the number of pixels in the television panel connected to the HDMI output connector is automatically detected, and the optimum resolution is output according to the table above.
If 1080p 24Hz signals input from the HDMI terminal are converted into 1080p 60Hz/1080p 50Hz for output, they are output according to the specified “Format” setting in the menu:
“NTSC” – Output as 1080p 60Hz.
“PAL” – Output as 1080p 50Hz.
You can not convert 60Hz into 50Hz or vice versa.
You can not convert 50Hz into 24Hz.

Personal notes:

# TROUBLE SHOOTING

## 1. POWER

### 1.1. Power not turn on

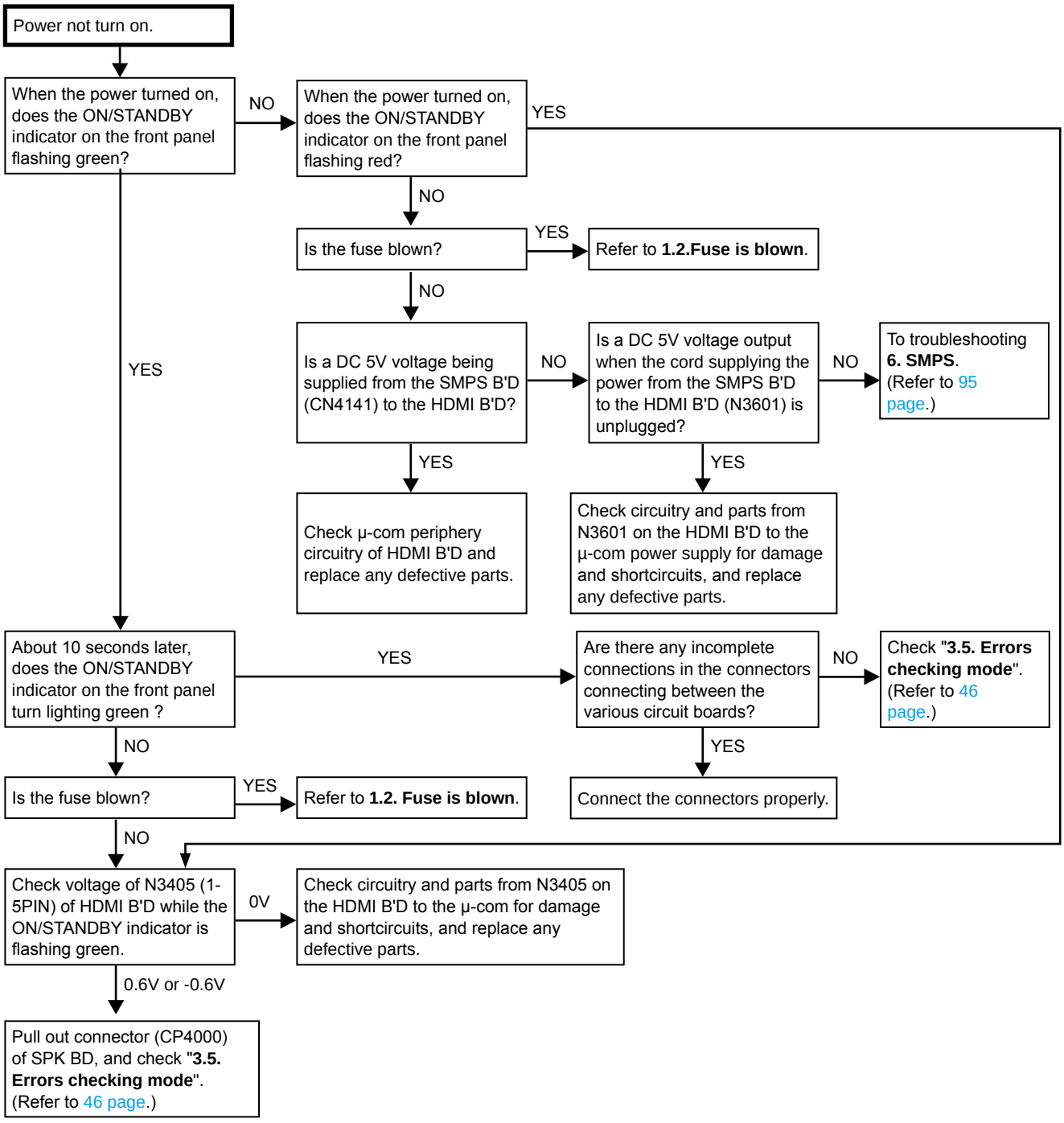


### 1.2. Fuse is blown

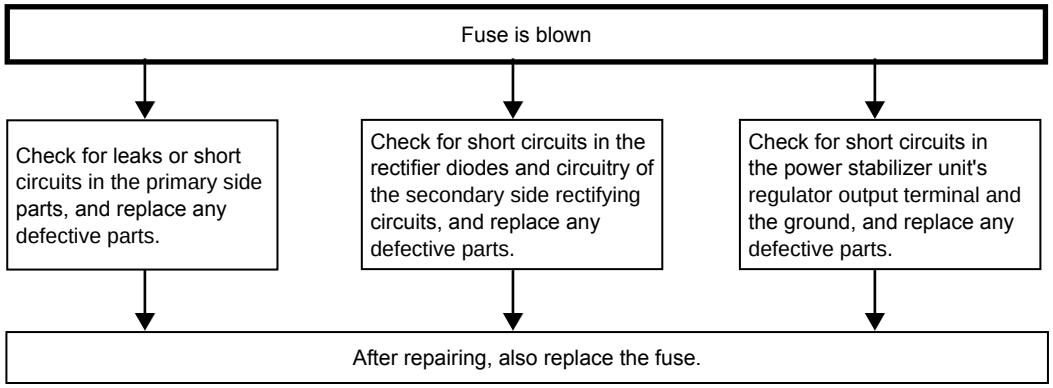

## 2. Analog video

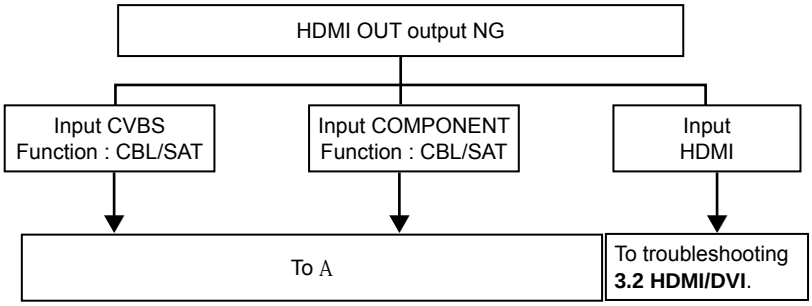


### <HDMI B'D> UNIT test point

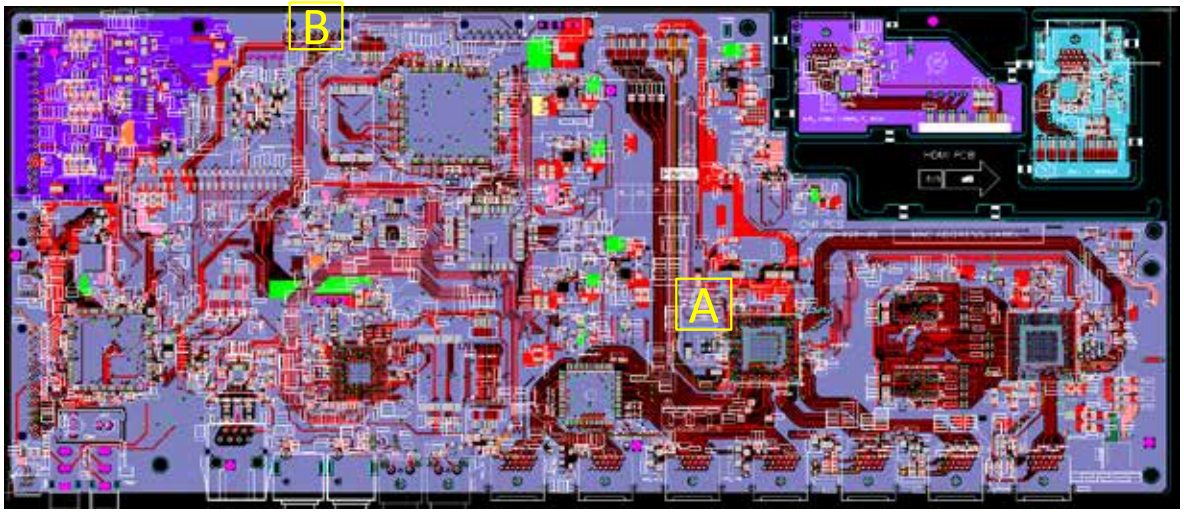


**Detail A**

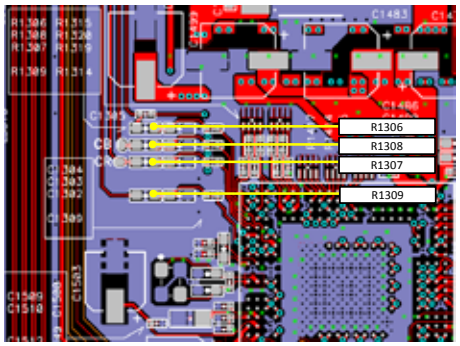


**Detail B**

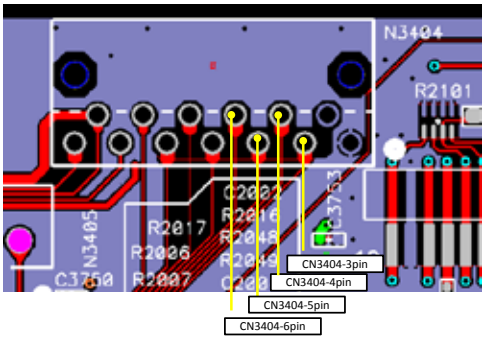


### <VIDEO B'D> UNIT test point

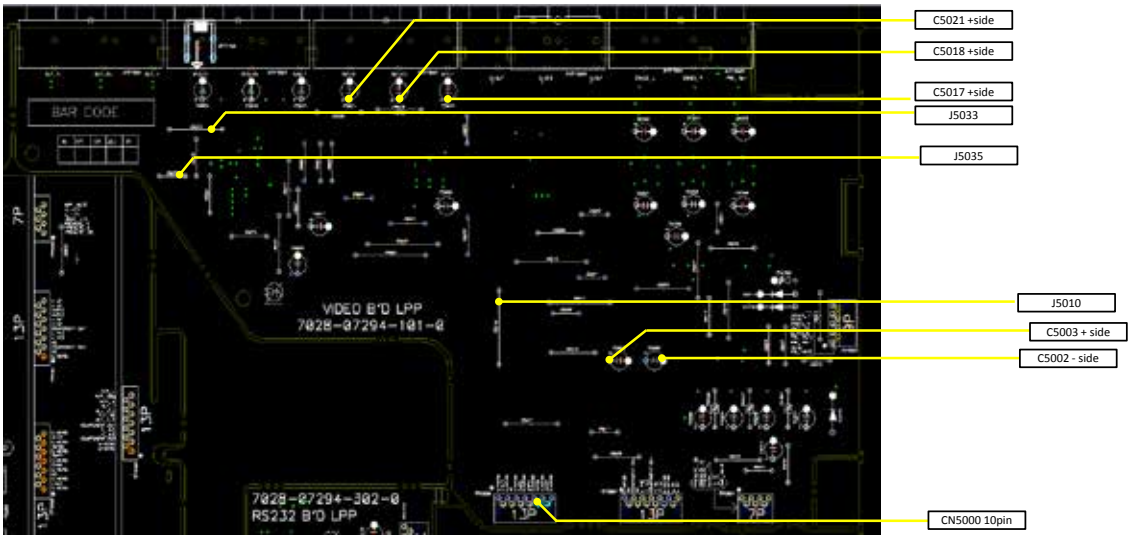

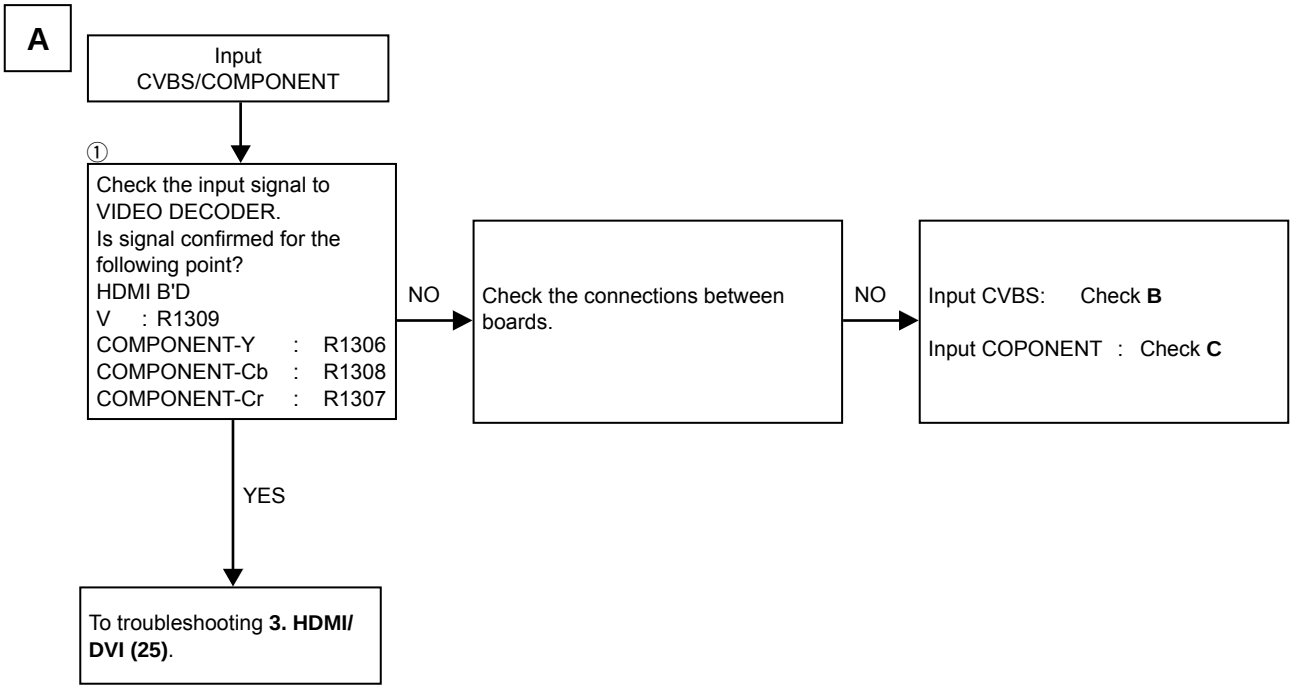
A
Input
CVBS/COMPONENT
①
Check the input signal to VIDEO DECODER.
Is signal confirmed for the following point?
HDMI B'D
V : R1309
COMPONENT-Y : R1306
COMPONENT-Cb : R1308
COMPONENT-Cr : R1307
NO
Check the connections between boards.
NO
Input CVBS: Check B
Input COPONENT : Check C
YES
To troubleshooting 3. HDMI/ DVI (25).

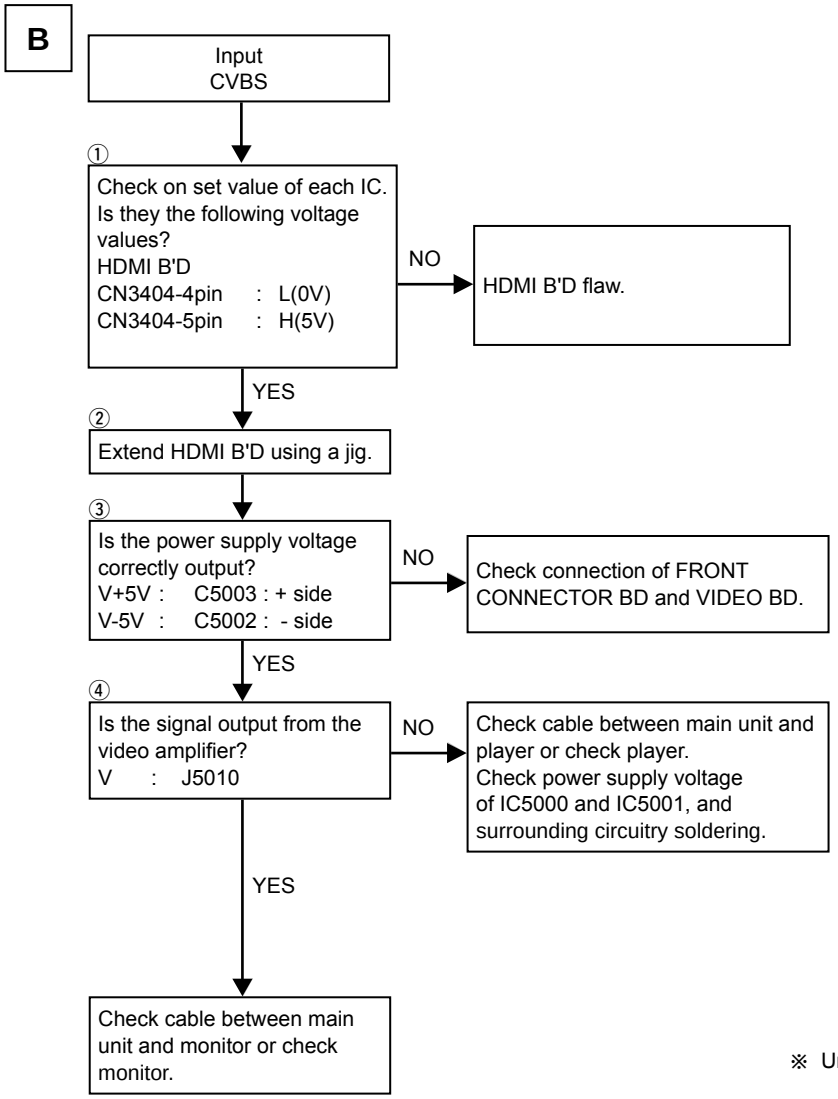


※ Unless specified, VIDEO B'D part.

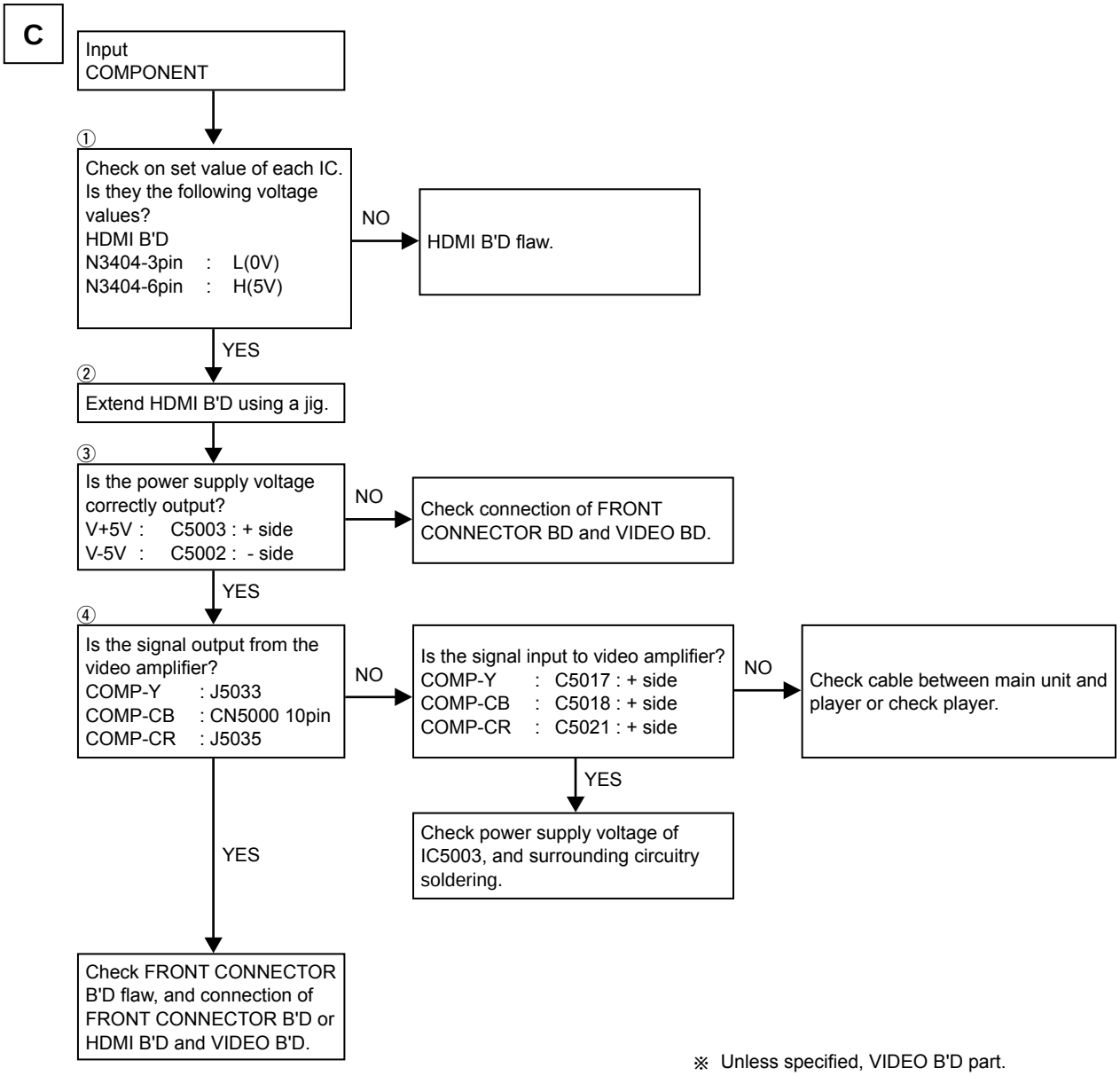


※ Unless specified, VIDEO B'D part.

# 3. HDMI/DVI

## 3.1. No picture or sound is output (HDMI to HDMI)

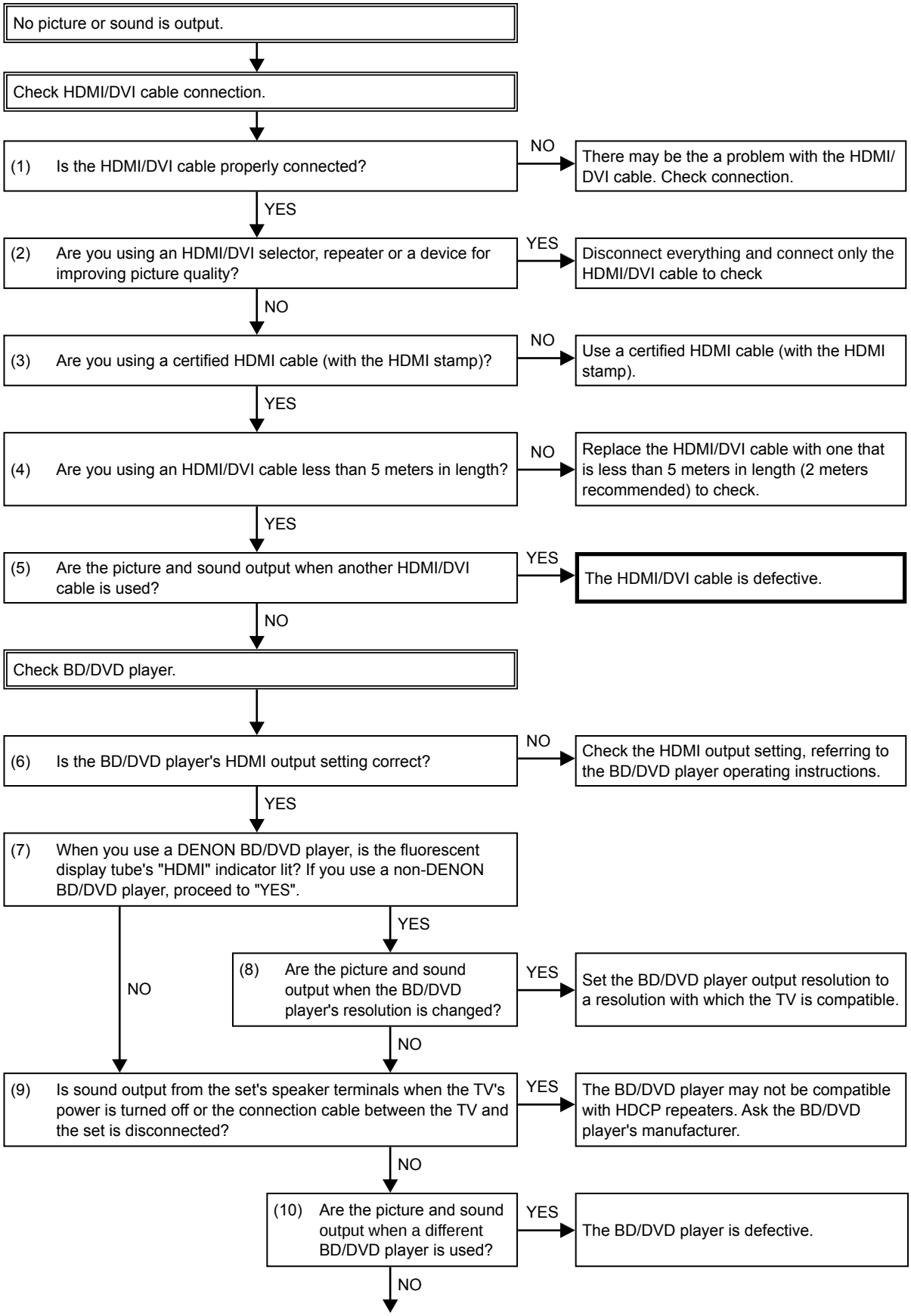

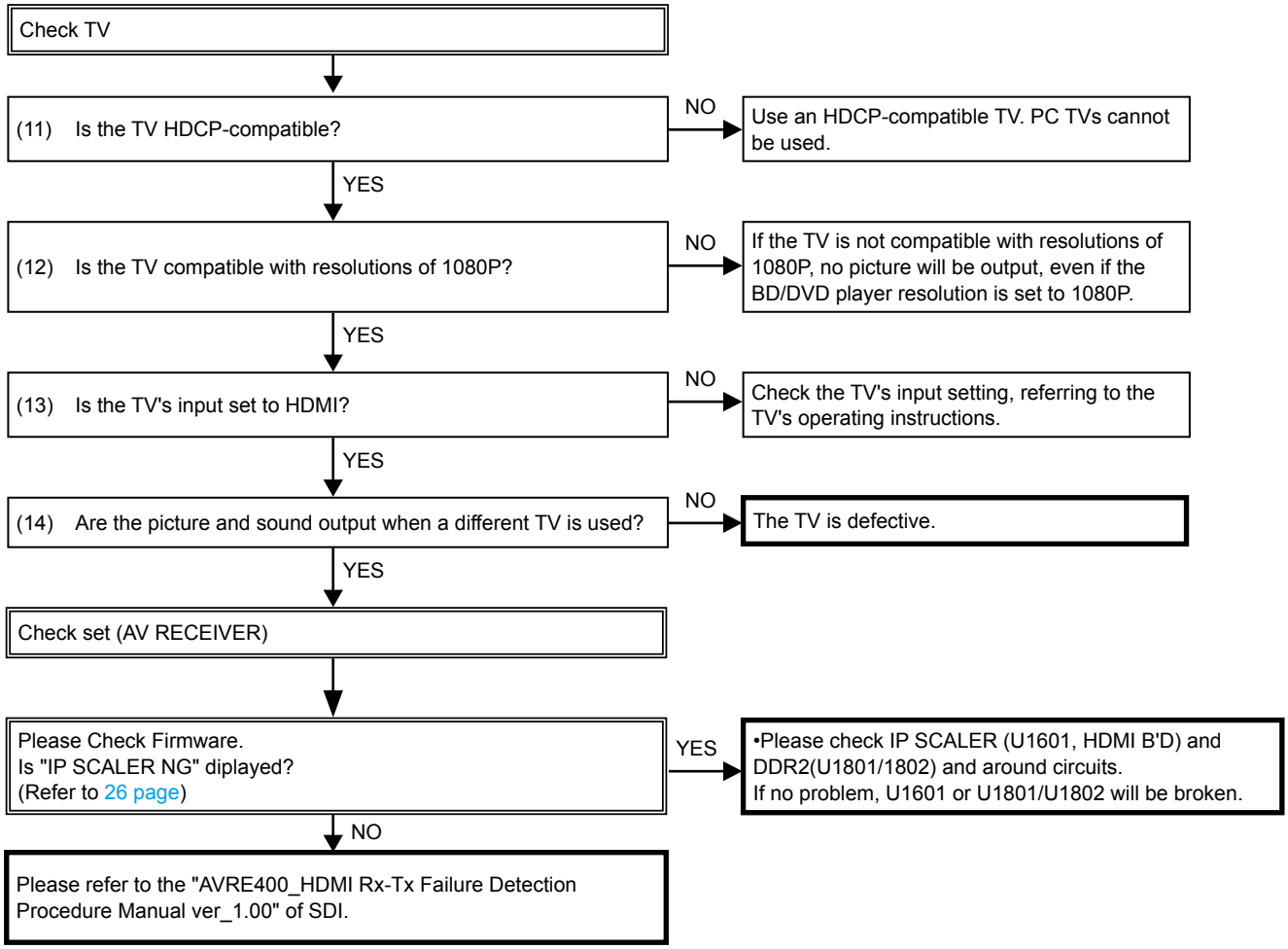
Check TV
(11) Is the TV HDCP-compatible?
NO
Use an HDCP-compatible TV. PC TVs cannot be used.
YES
(12) Is the TV compatible with resolutions of 1080P?
NO
If the TV is not compatible with resolutions of 1080P, no picture will be output, even if the BD/DVD player resolution is set to 1080P.
YES
(13) Is the TV's input set to HDMI?
NO
Check the TV's input setting, referring to the TV's operating instructions.
YES
(14) Are the picture and sound output when a different TV is used?
NO
The TV is defective.
YES
Check set (AV RECEIVER)
Please Check Firmware.
Is "IP SCALER NG" diplayed?
(Refer to 26 page)
YES
•Please check IP SCALER (U1601, HDMI B'D) and DDR2(U1801/1802) and around circuits.
If no problem, U1601 or U1801/U1802 will be broken.
NO
Please refer to the "AVRE400_HDMI Rx-Tx Failure Detection Procedure Manual ver_1.00" of SDI.

# 4. AUDIO

## 4.1. AUDIO CHECK

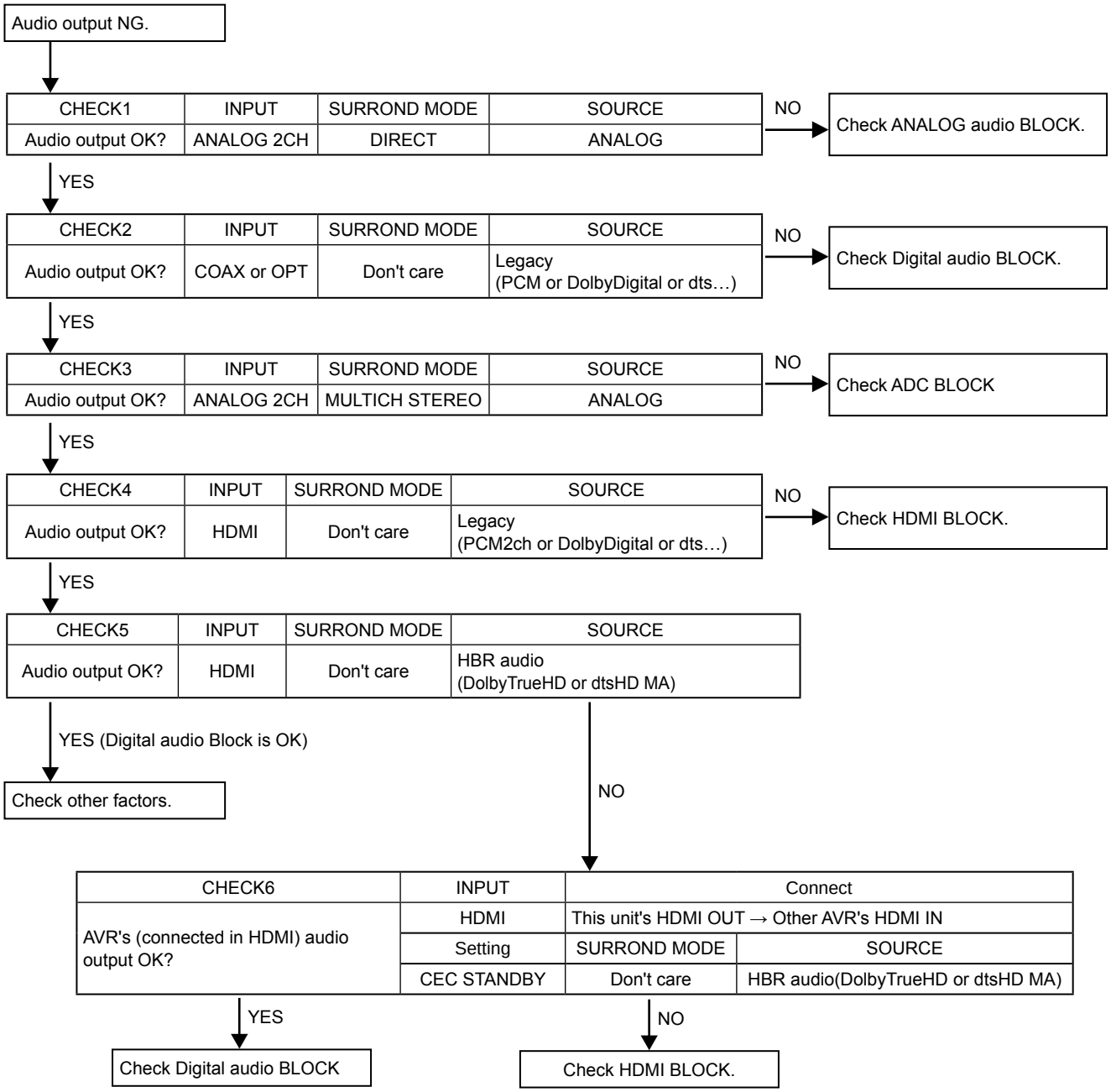

## 4.2. Power AMP (AMP UNIT)

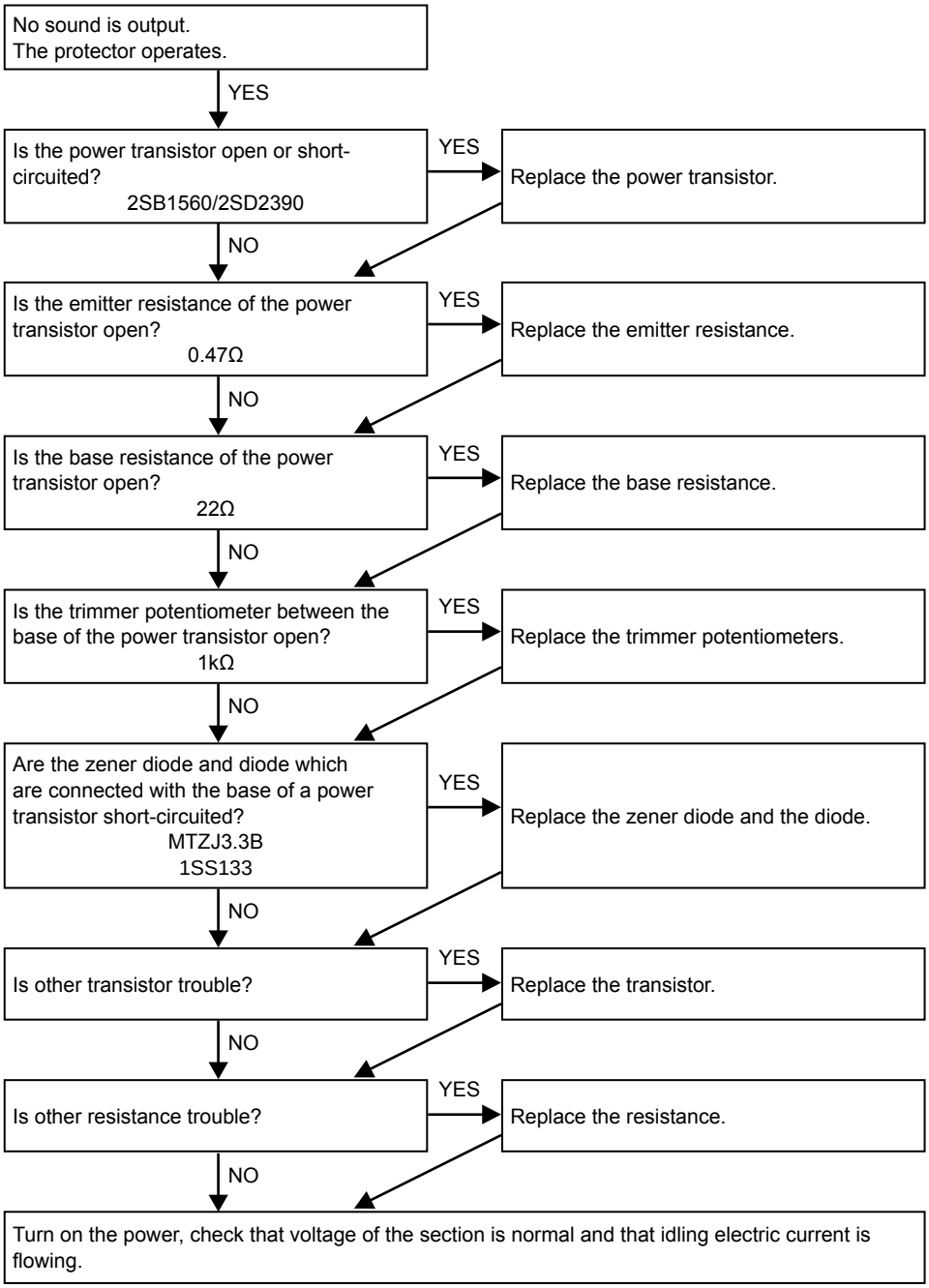

## 4.3. Analog audio

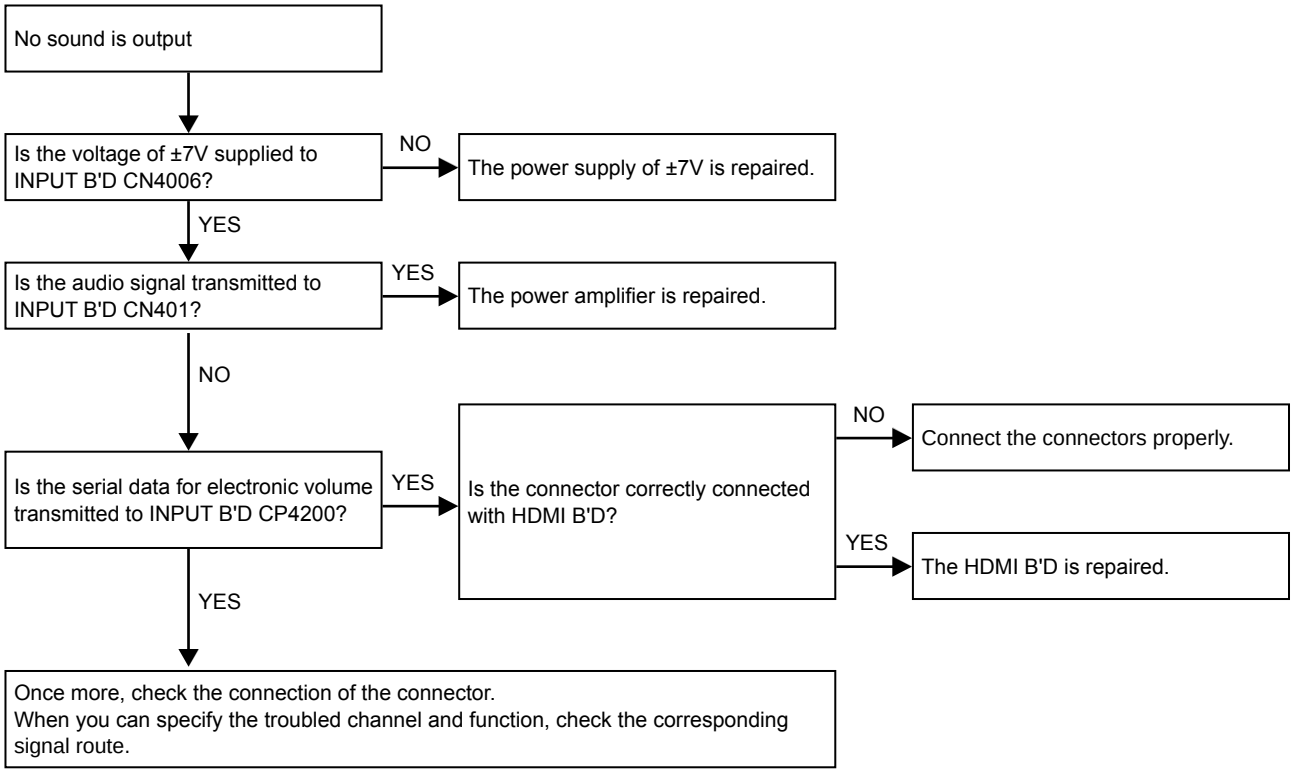

# 5. Network/USB

## 5.1. Cannot connect to network

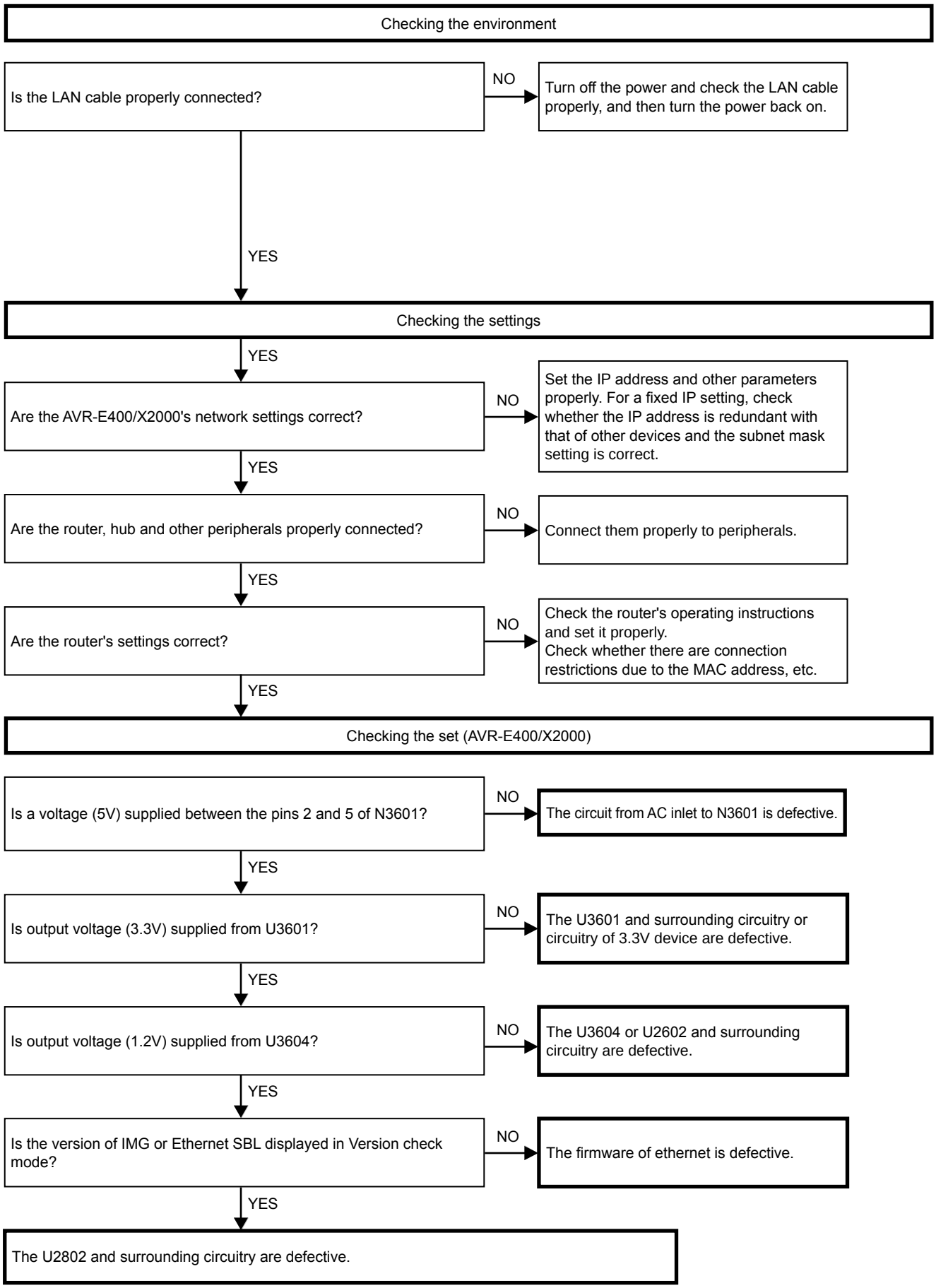

## 5.2. USB device is not recognized

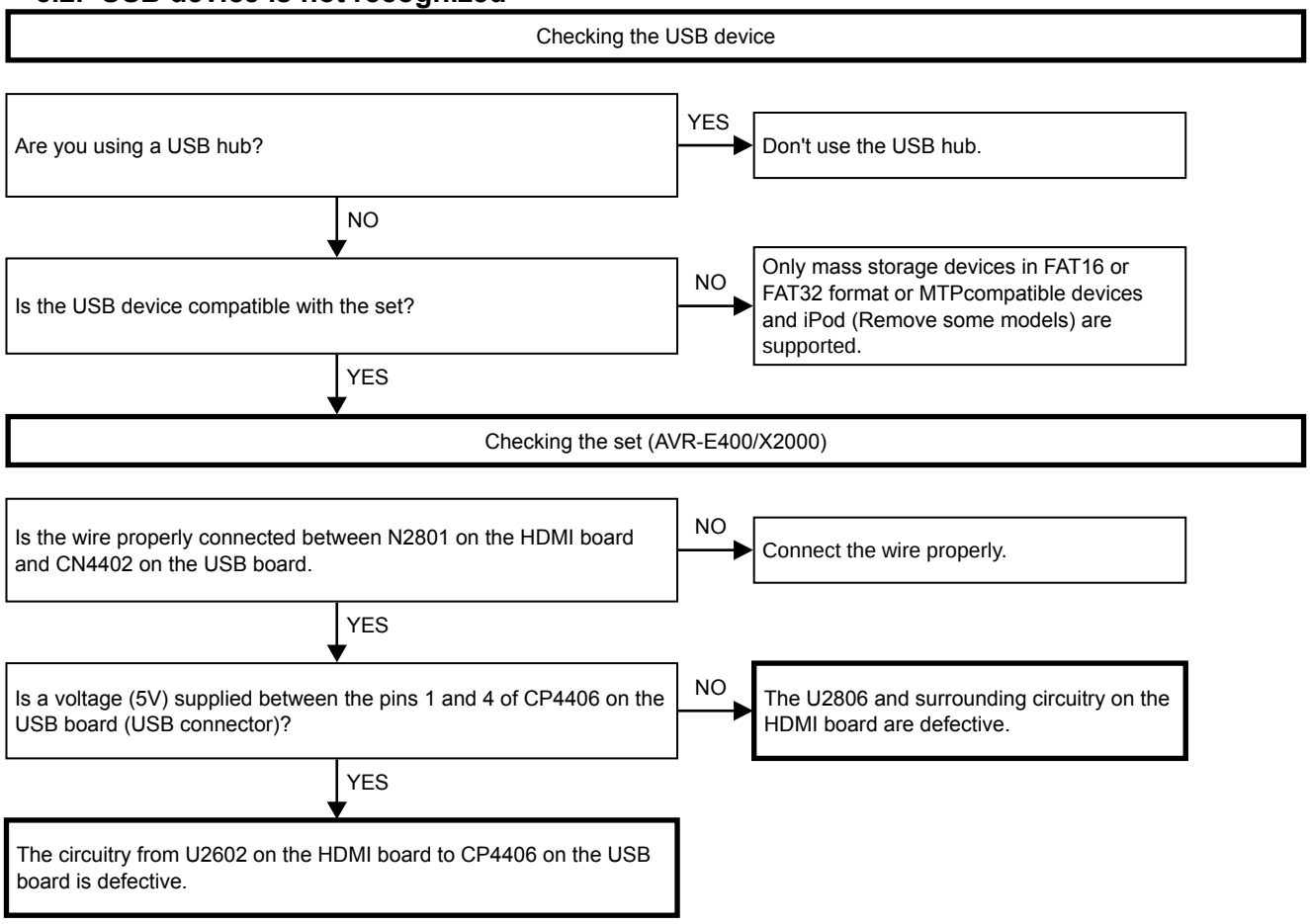


## 5.3. No picture or no sound is output

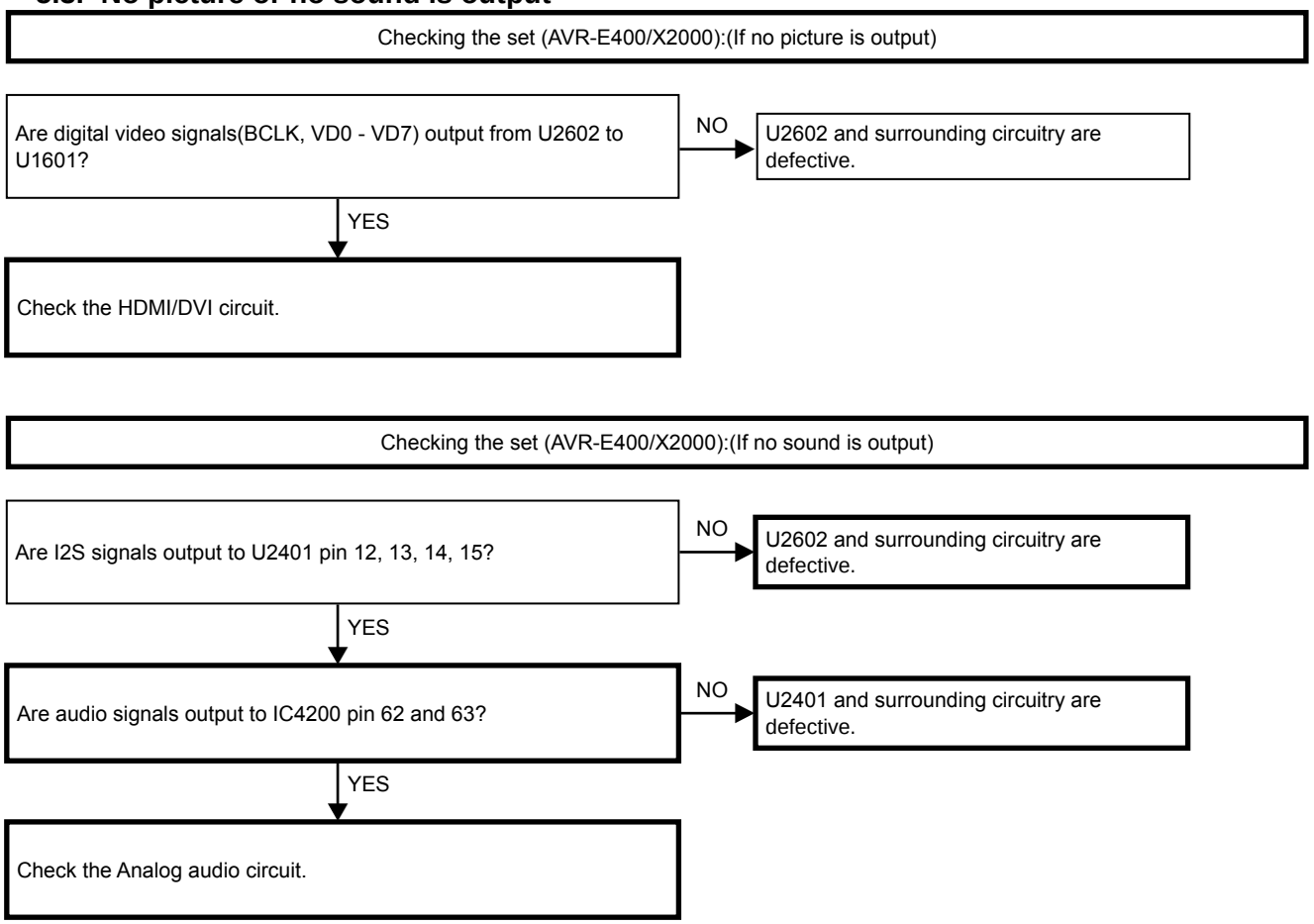

## HDMI test point (AVR-E400 / X2000)

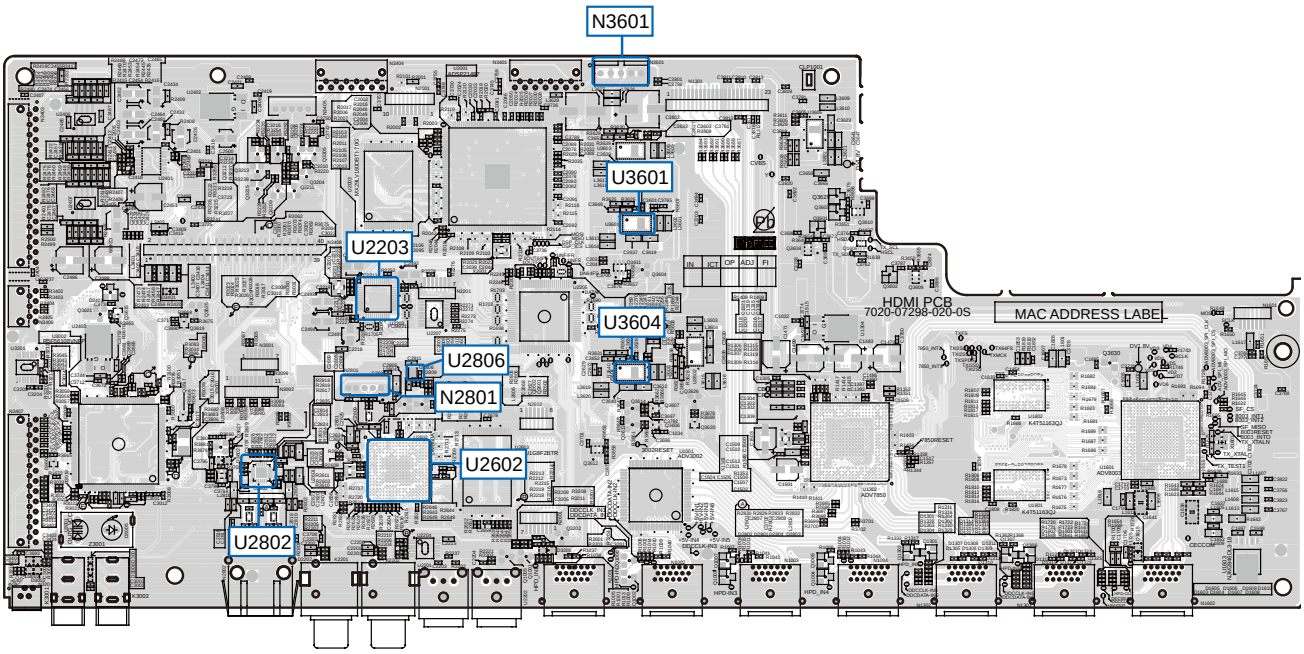


(COMPONENT SIDE)

## USB test point

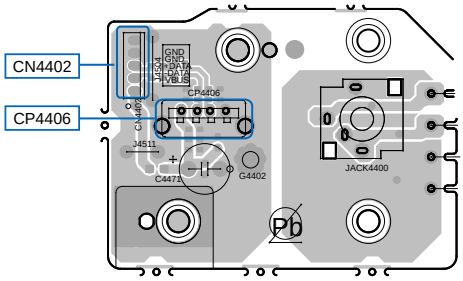


(COMPONENT SIDE)

## 6. SMPS

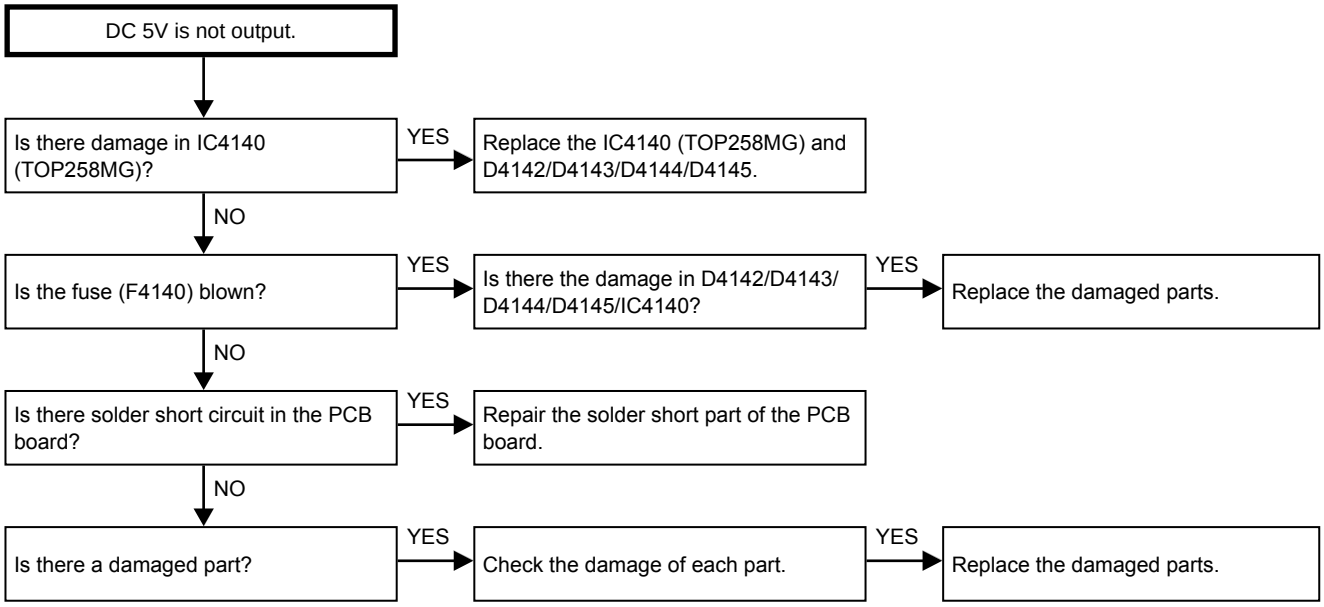
DC 5V is not output.
Is there damage in IC4140 (TOP258MG)?
YES
Replace the IC4140 (TOP258MG) and D4142/D4143/D4144/D4145.
NO
Is the fuse (F4140) blown?
YES
Is there the damage in D4142/D4143/ D4144/D4145/IC4140?
YES
Replace the damaged parts.
NO
Is there solder short circuit in the PCB board?
YES
Repair the solder short part of the PCB board.
NO
Is there a damaged part?
YES
Check the damage of each part.
YES
Replace the damaged parts.

Operation waveform for each part

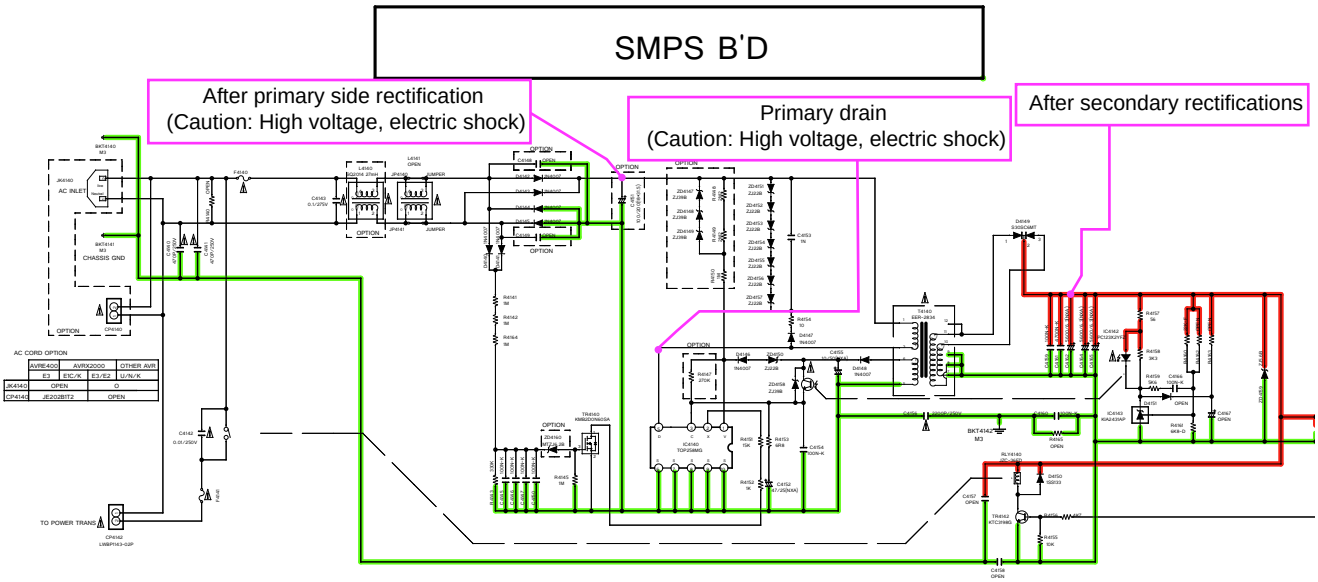


SMPS unit
(Unloaded)

A

B

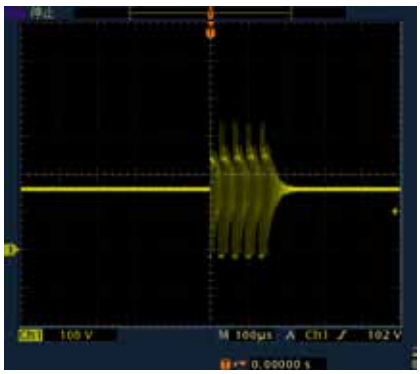

C

Set

A

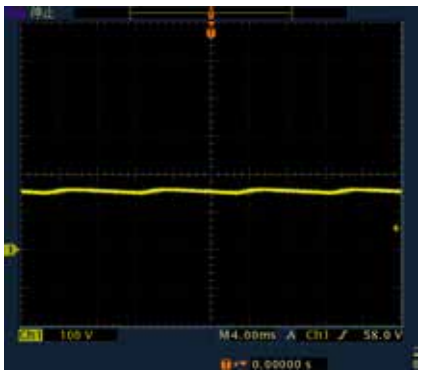

B

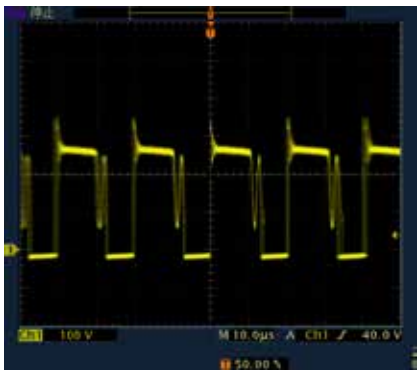

C

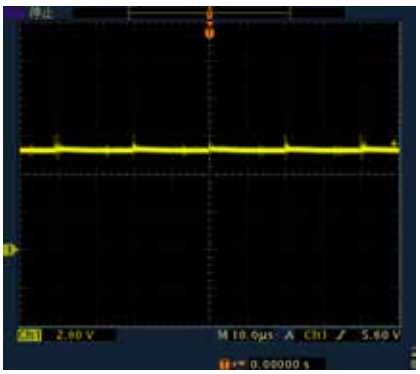

Personal notes:

# CLOCK FLOW & WAVE FORM IN DIGITAL BLOCK DIAGRAM

WAVE FORM

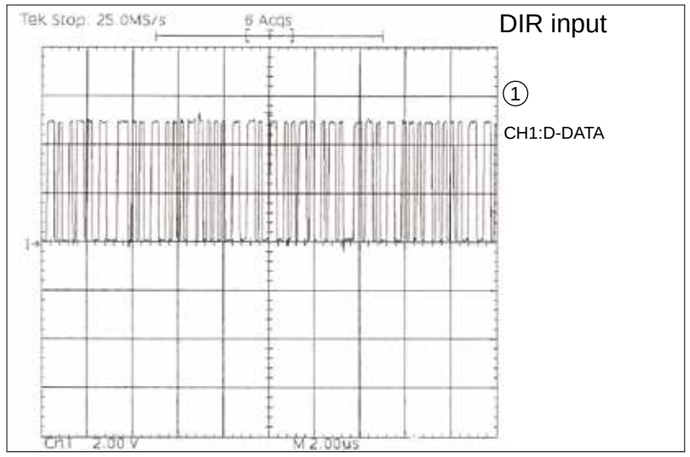


DIR input

①

CH1:D-DATA

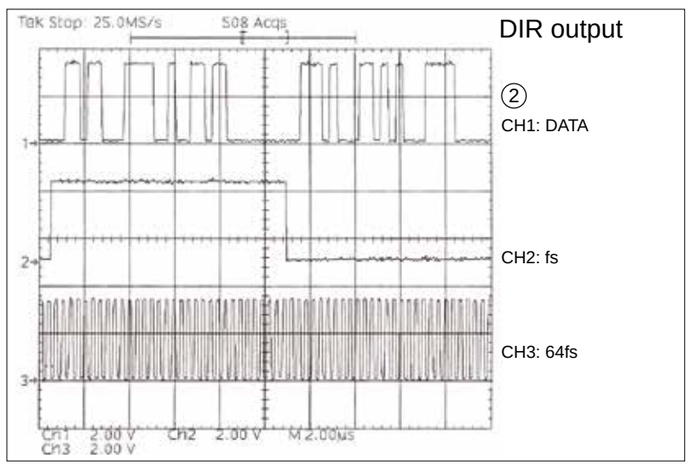


DIR output

②

CH1: DATA

CH2: fs

CH3: 64fs

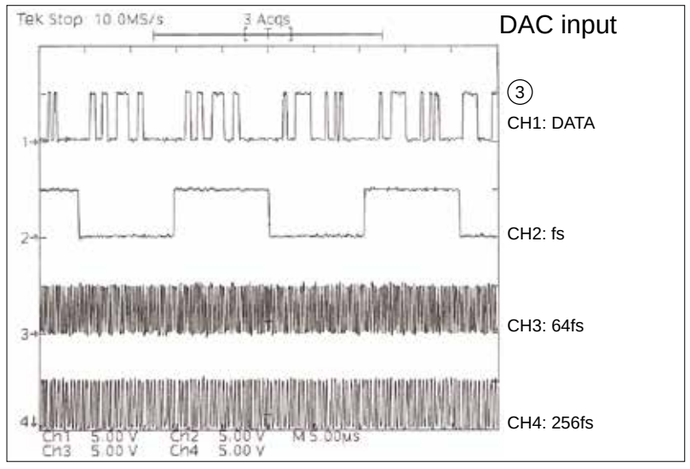


DAC input

③

CH1: DATA

CH2: fs

CH3: 64fs

CH4: 256fs

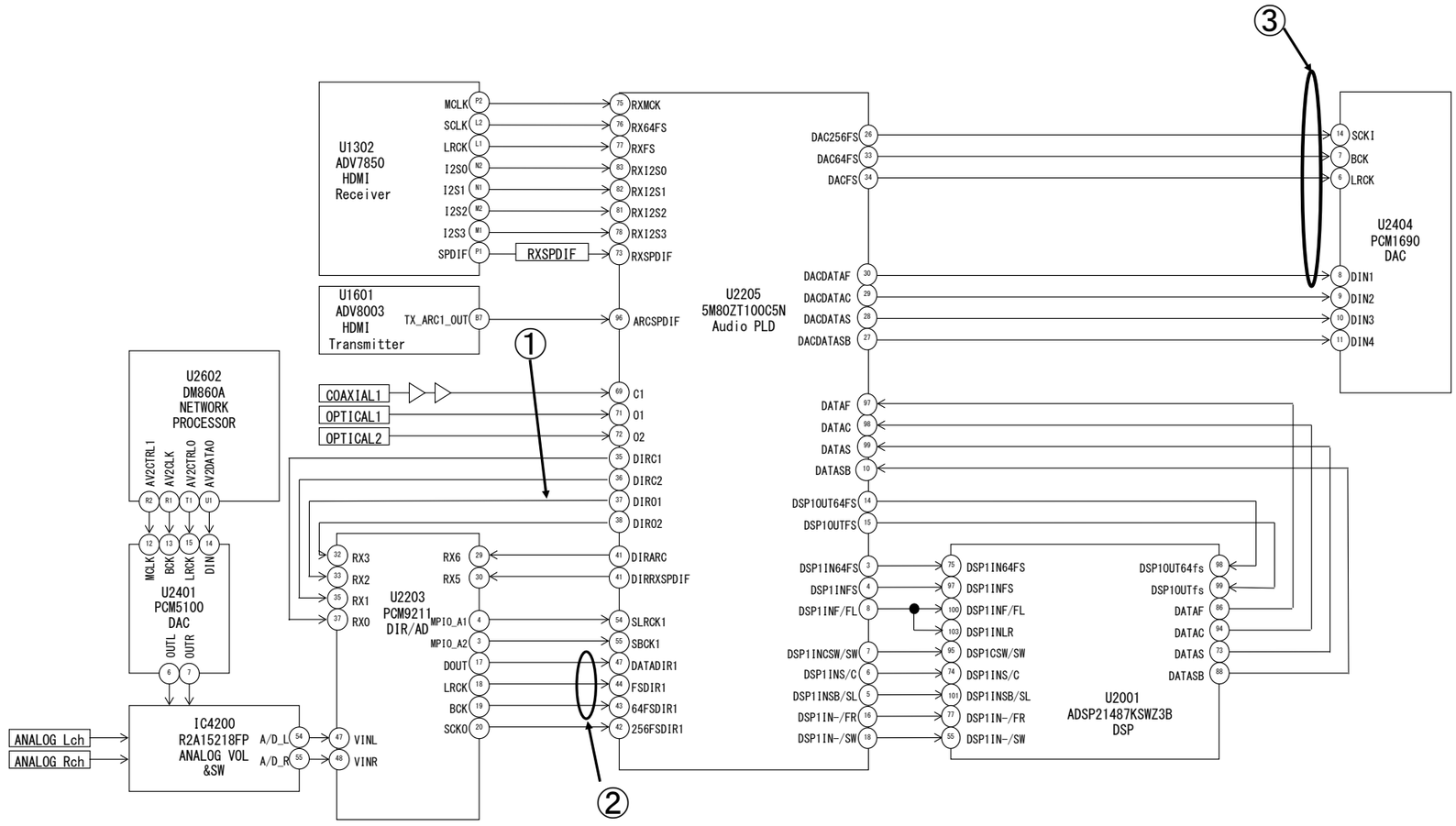


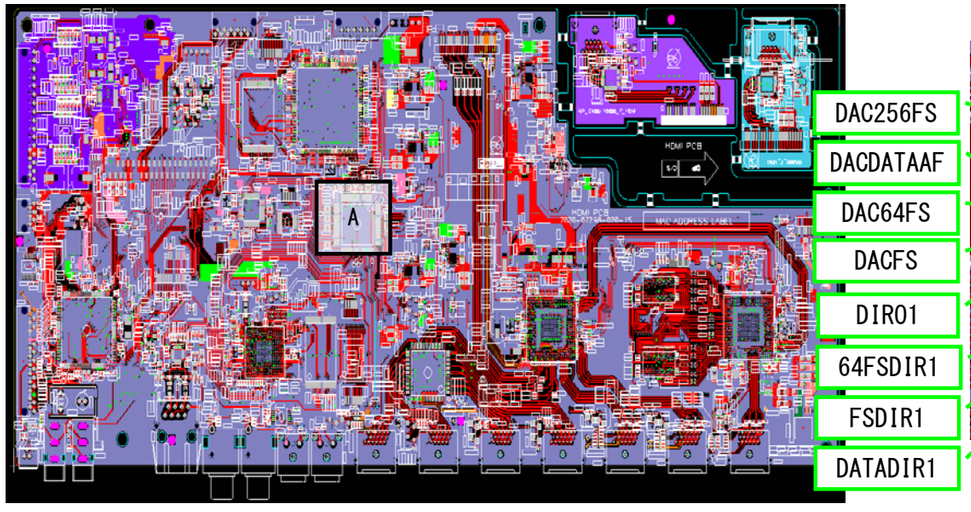


DAC256FS

DACDATAAF

DAC64FS

DACFS

DIR01

64FSDIR1

FSDIR1

DATADIR1

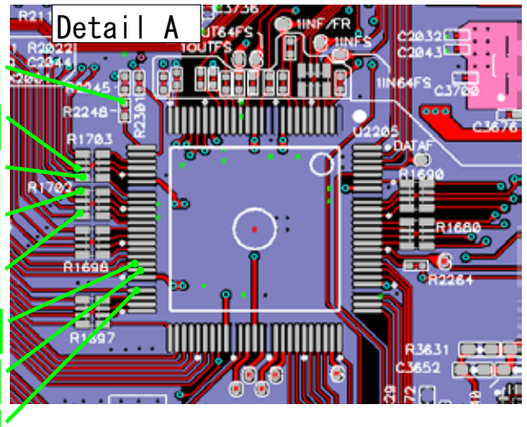

# LEVEL DIAGRAM

**AVR-E400/X2000**
**LEVEL DIAGRAM**
**FRONT ch**

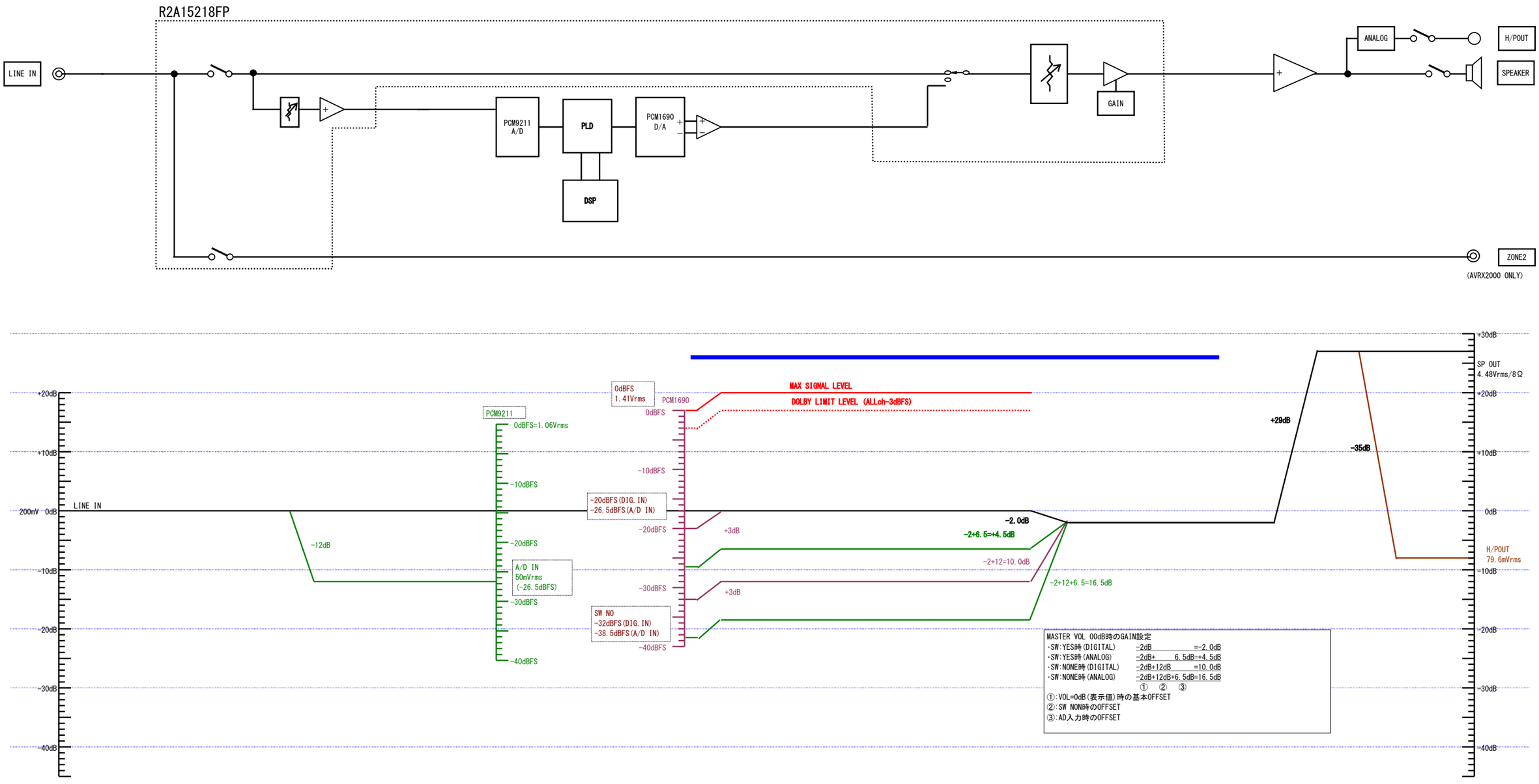

**AVR-E400/X2000**
**LEVEL DIAGRAM**
**CENTER ch**

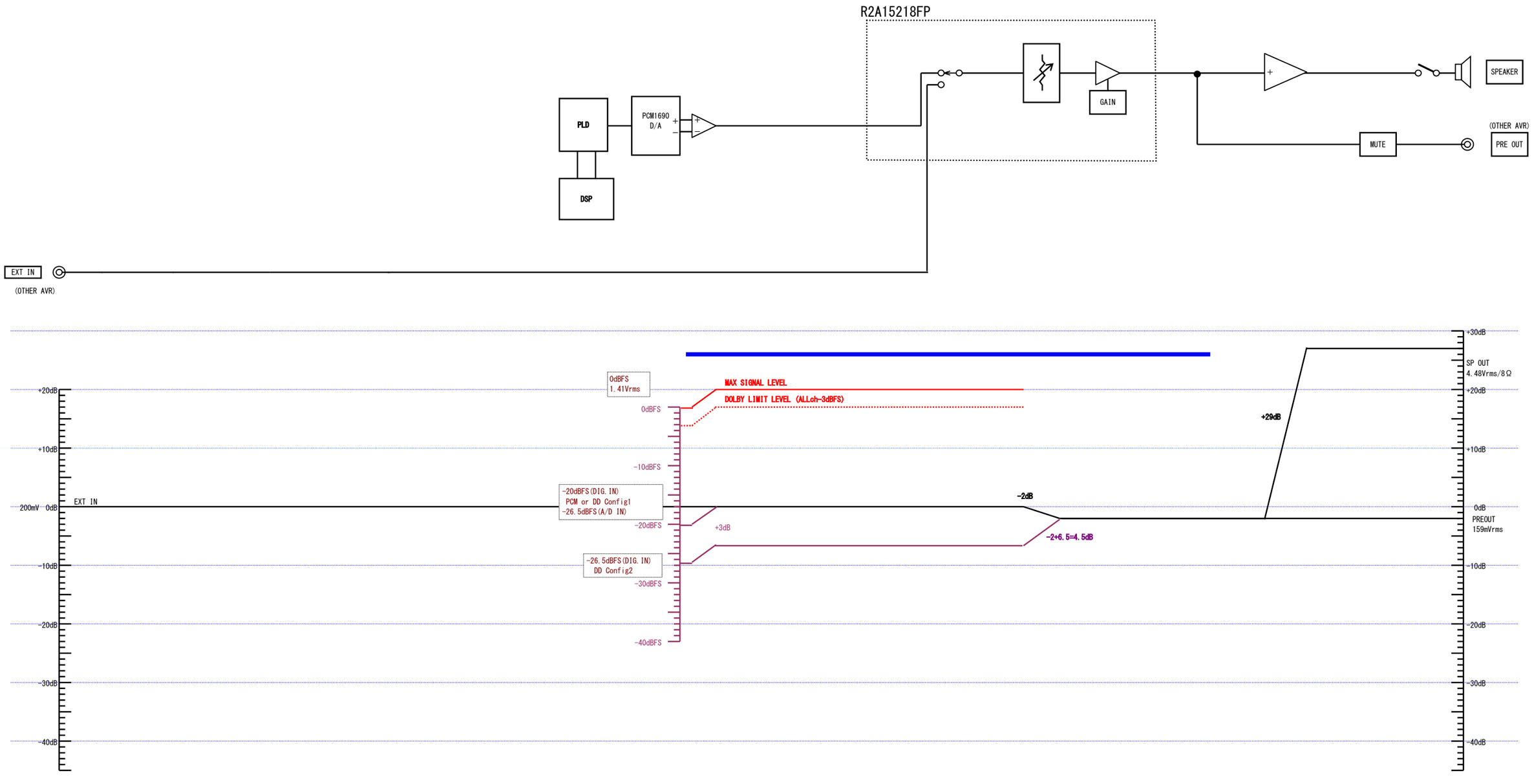

**AVR-E400/X2000**
**LEVEL DIAGRAM**
**SUBWOOFER ch**

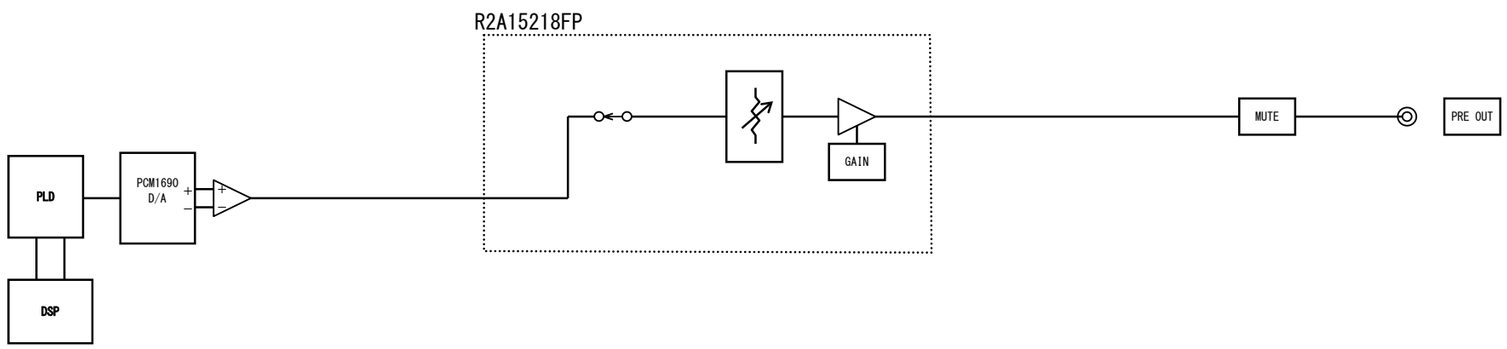


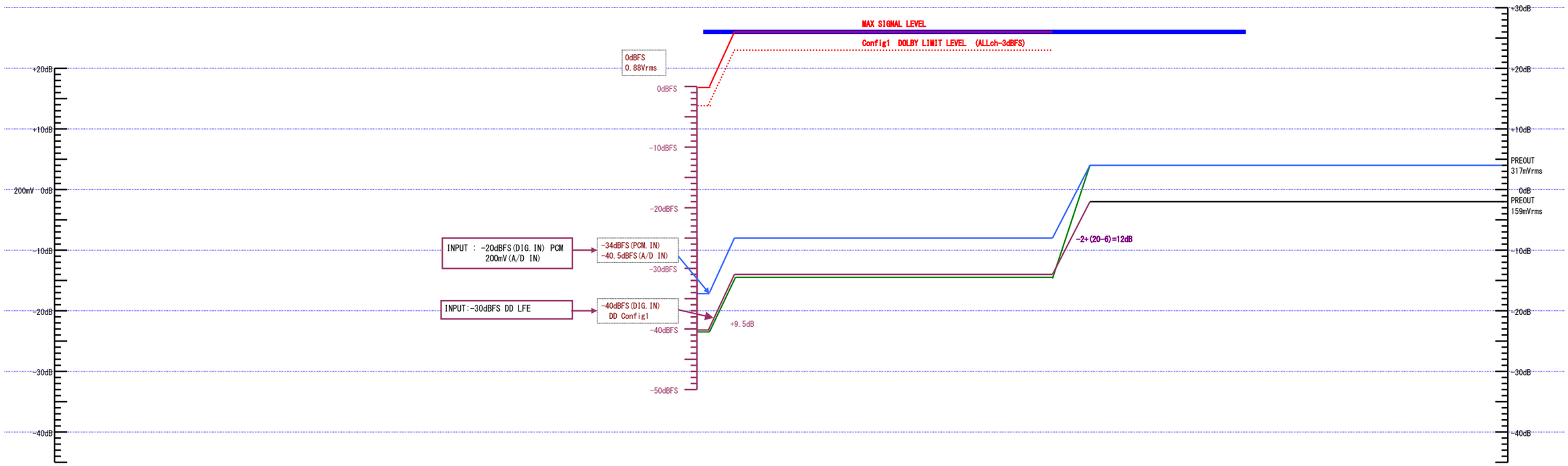

**AVR-E400/X2000**
**LEVEL DIAGRAM**
**SURROUND ch**

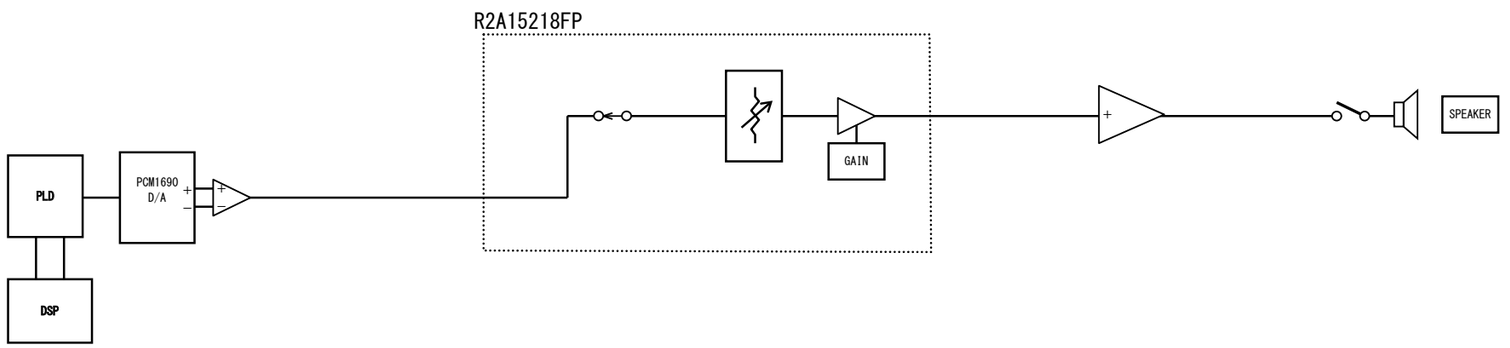


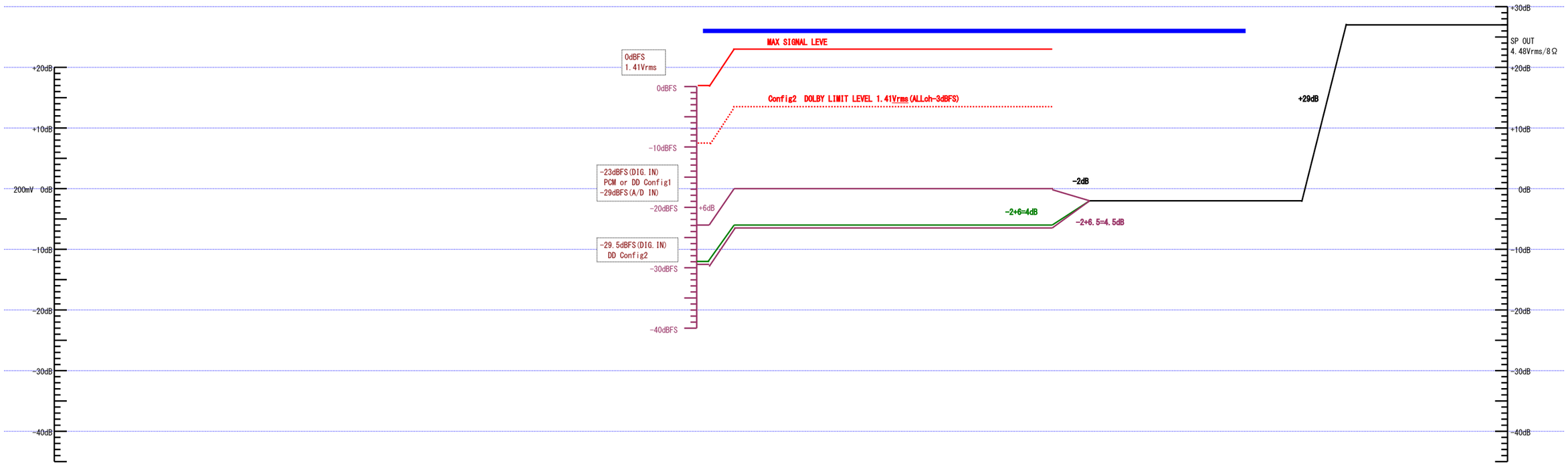

**AVR-E400/X2000**
**LEVEL DIAGRAM**
**SURR.BACK ch**

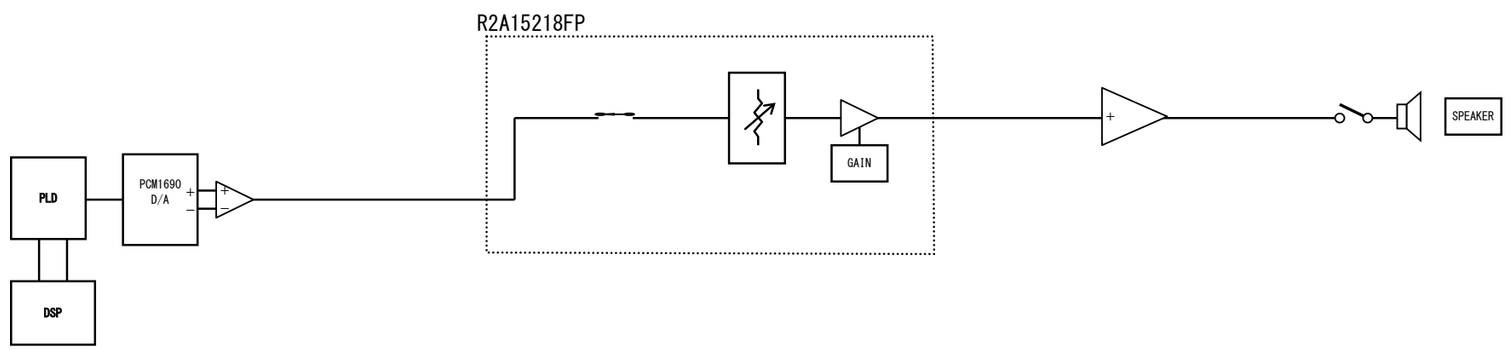


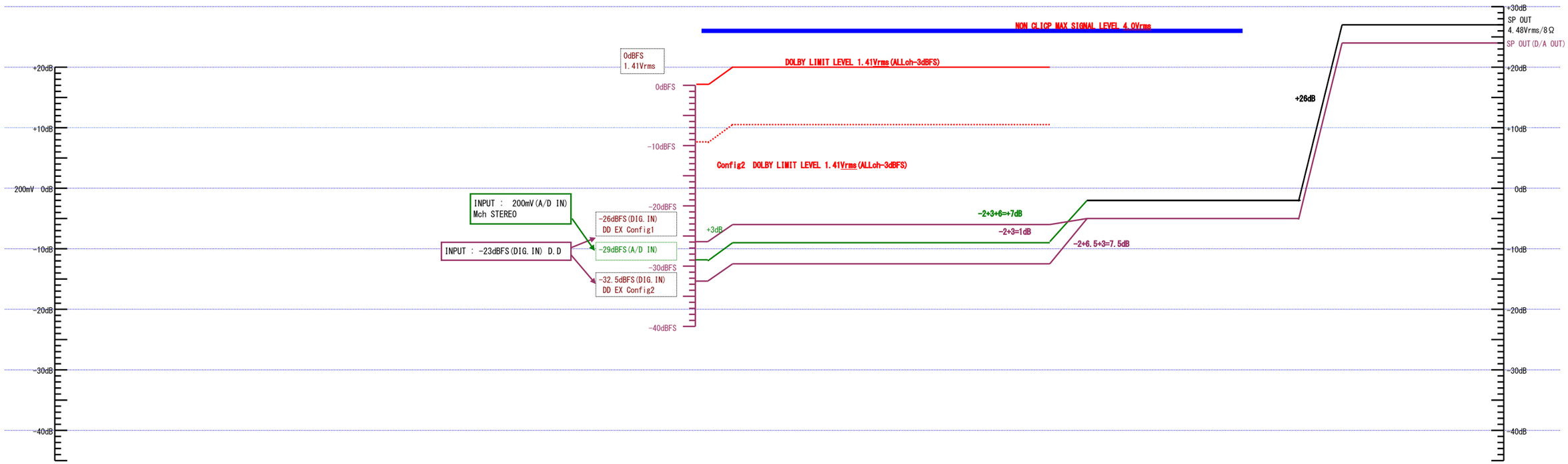

# AVR-E400/X2000
## LEVEL DIAGRAM
## ZONE2

# BLOCK DIAGRAM

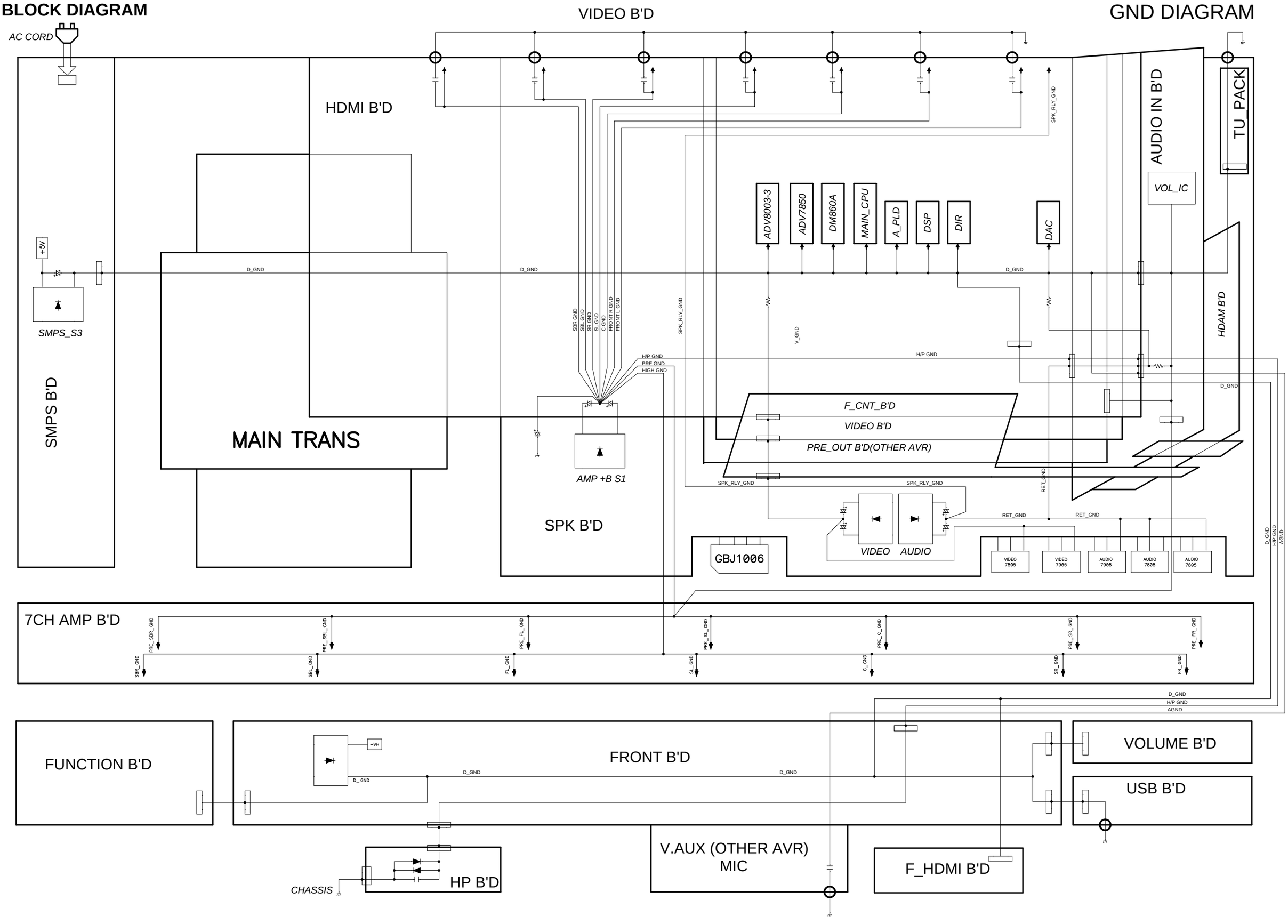

# POWER DIAGRAM

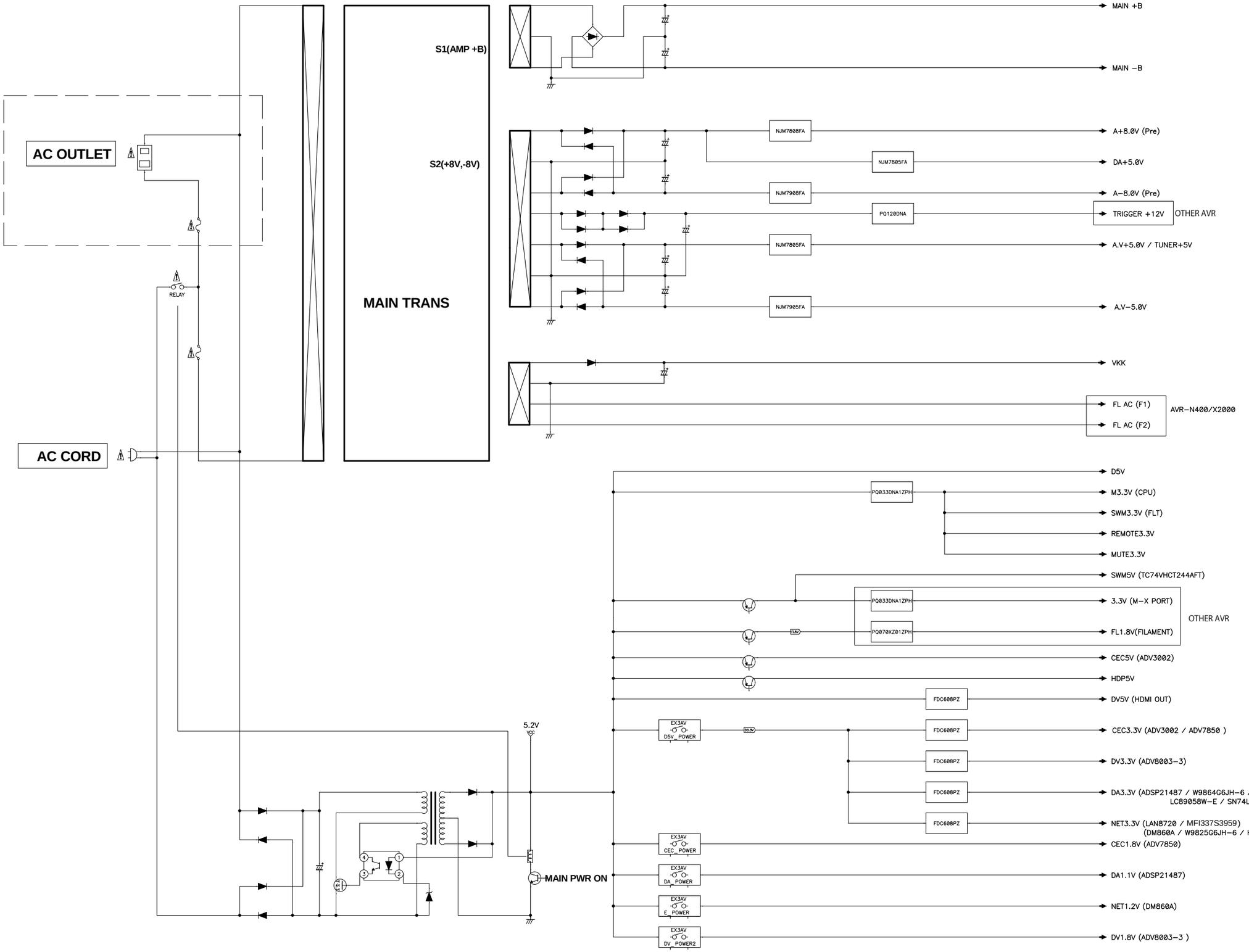

## WIRING DIAGRAM

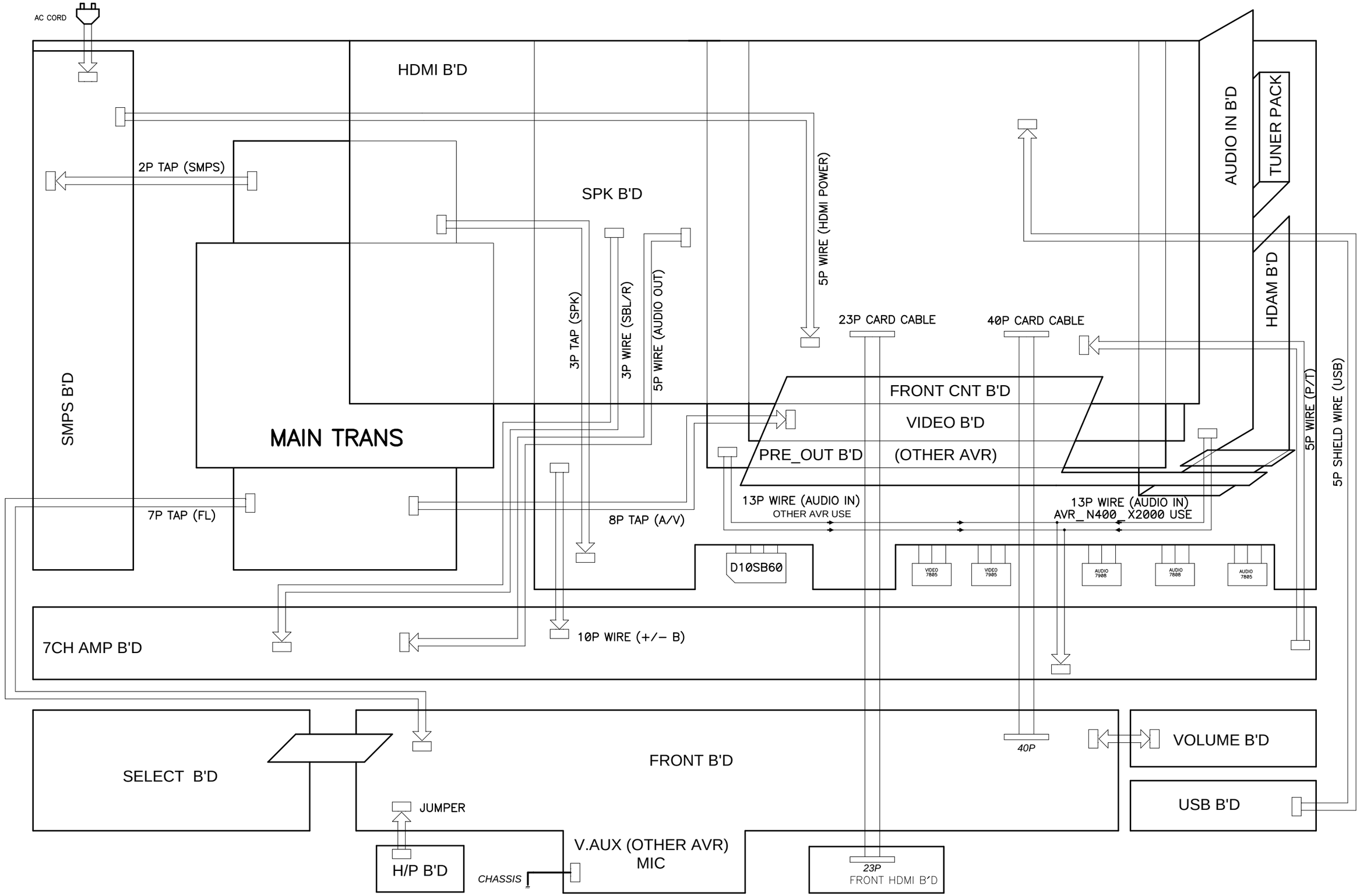

# PRINTED WIRING BOARDS

**Lead-free Solder**
When soldering, use the Lead-free Solder (Sn-Ag-Cu).

## SMPS (A SIDE)

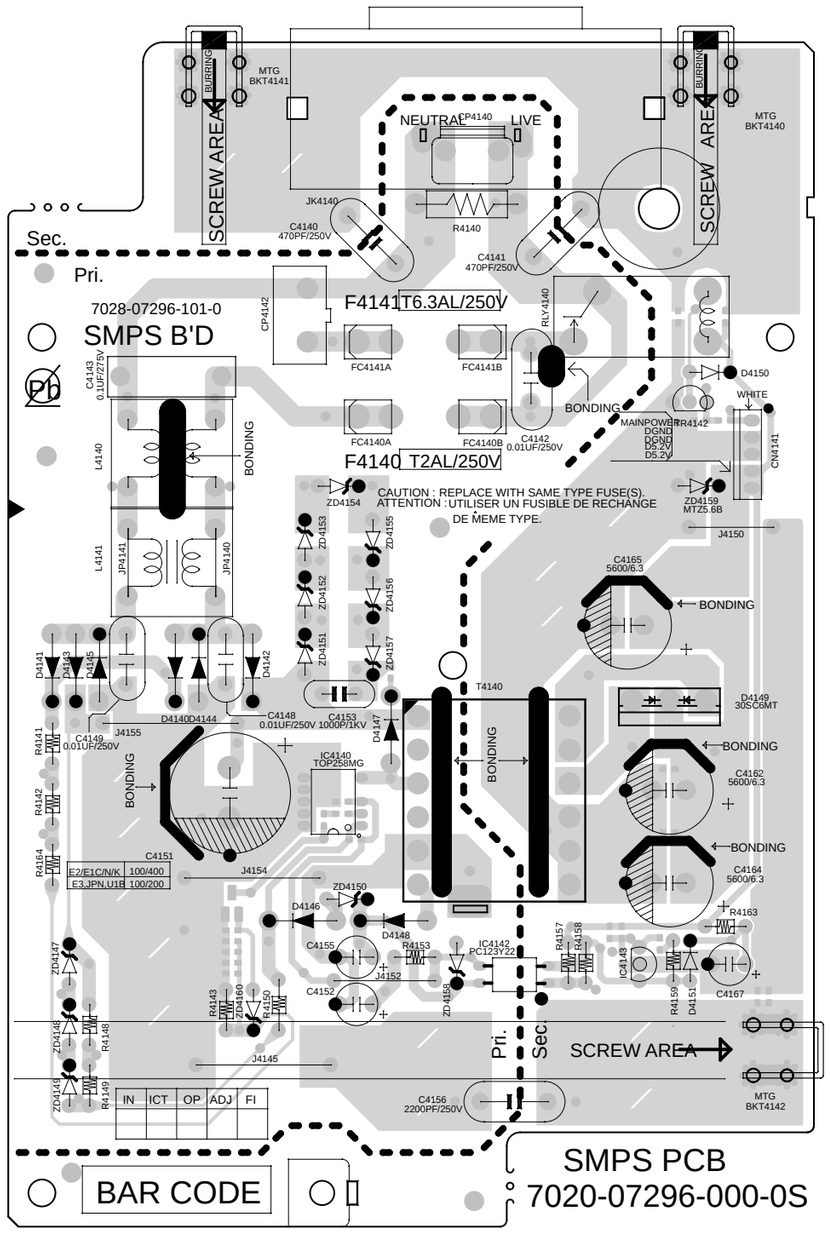


## SMPS (B SIDE)

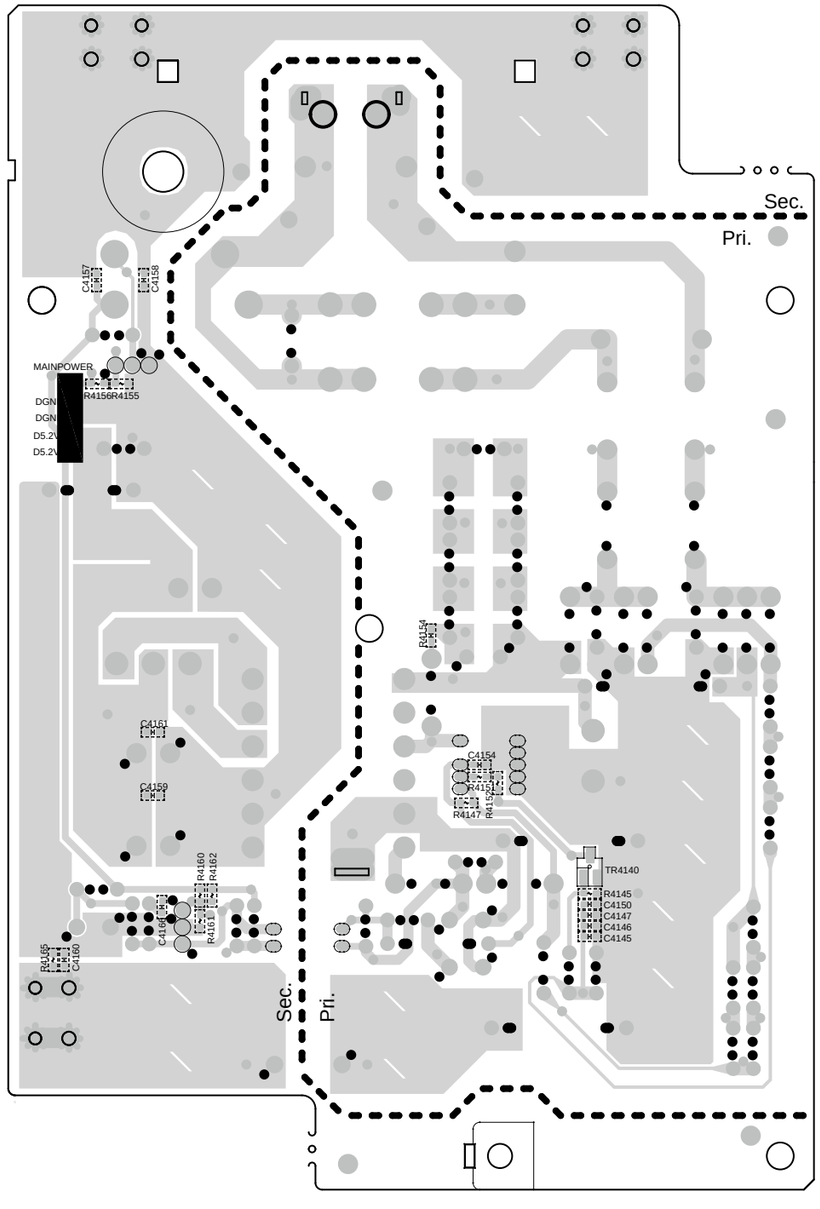

## FRONT (A SIDE)

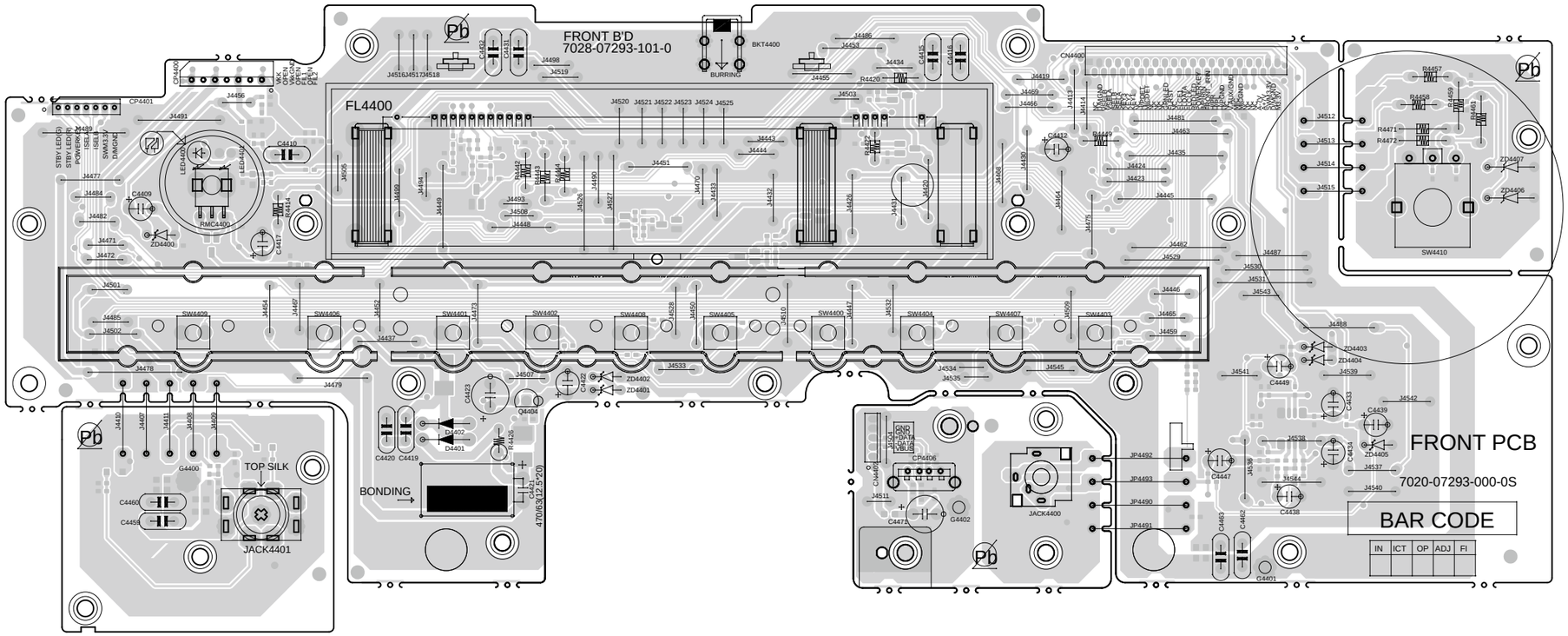


## FRONT HDMI CABLE (A SIDE)

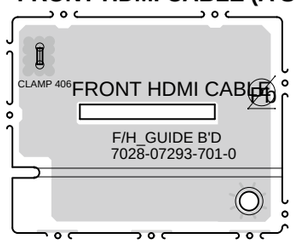


## FUNCTION (A SIDE)

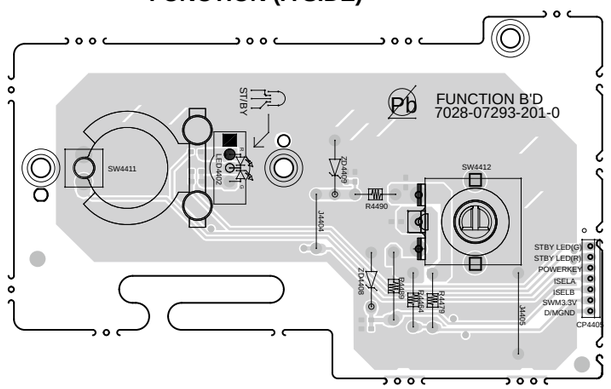


## GUIDE R (A SIDE)

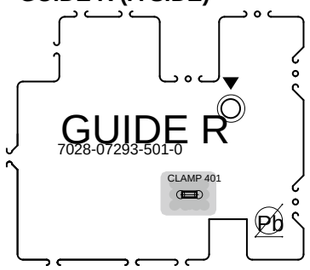


## TOP GUIDE (A SIDE)

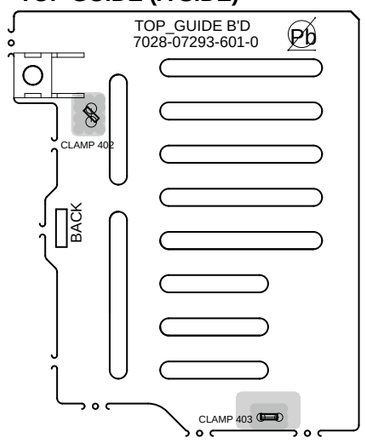


## CTN (A SIDE)

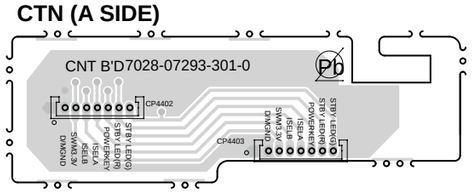


## GUIDE L (A SIDE)

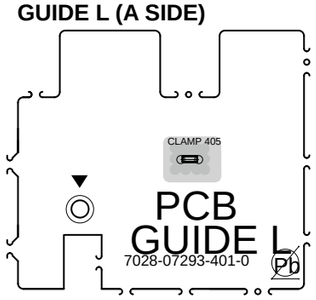

## FRONT (B SIDE)

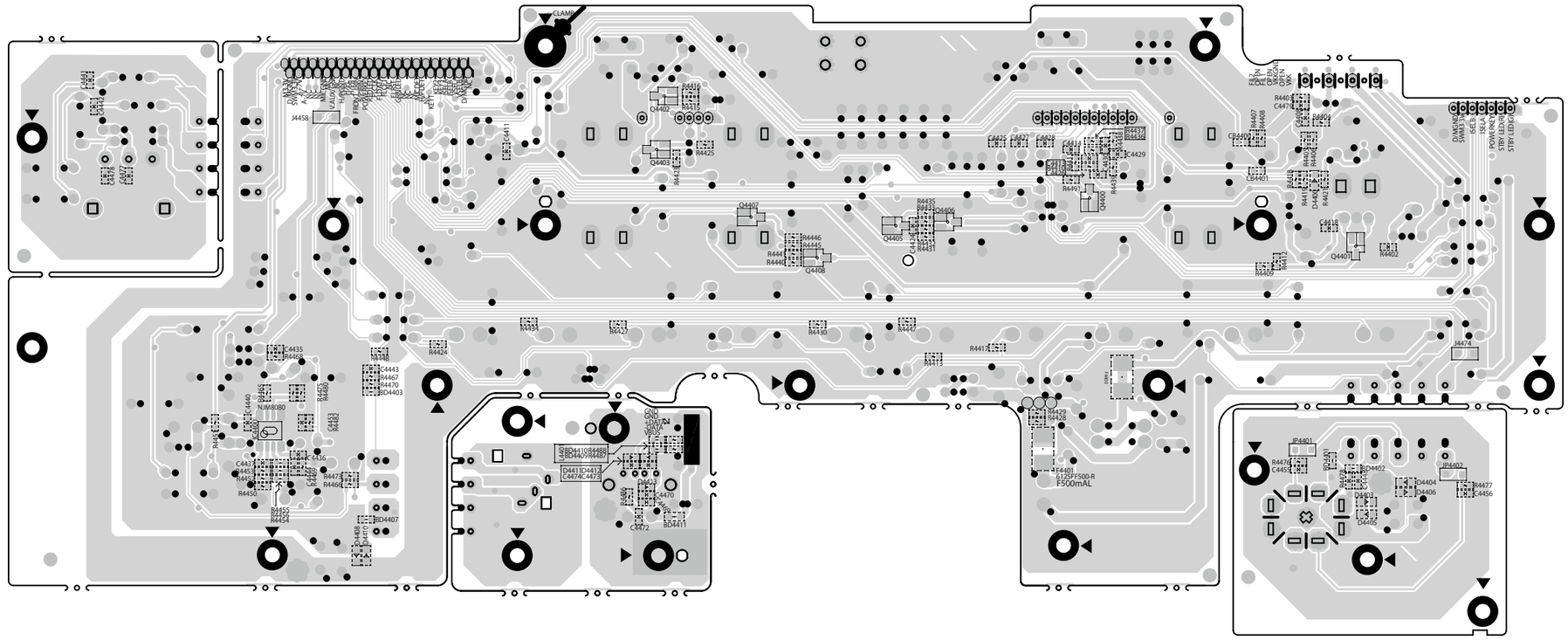


## TOP GUIDE (B SIDE)

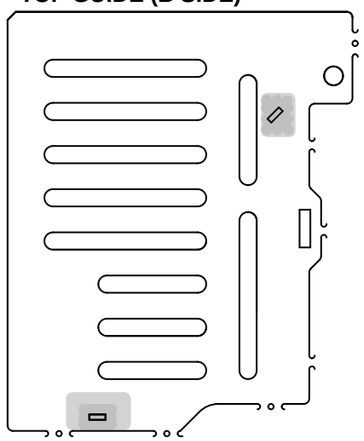

## GUIDE R (B SIDE)

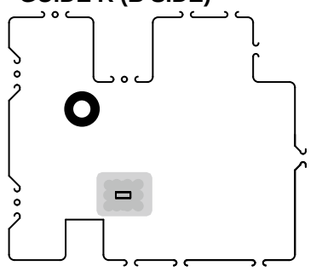

## GUIDE L (B SIDE)

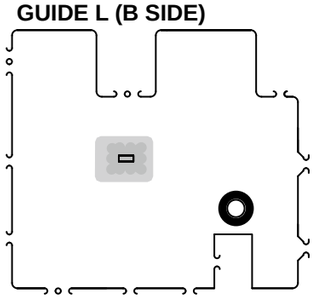

## FUNCTION (B SIDE)

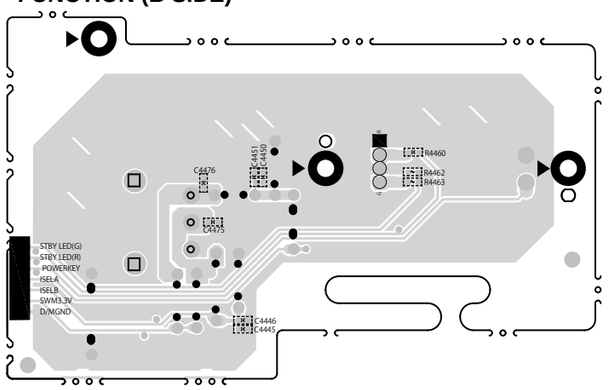


## FRONT HDMI CABLE (B SIDE)

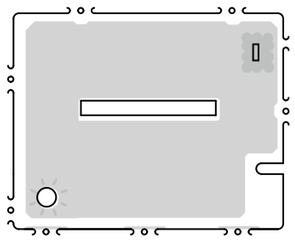

## CTN (B SIDE)

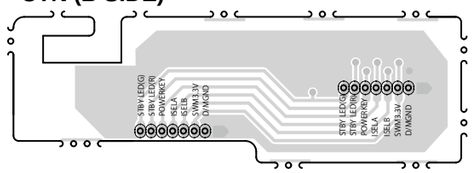

## MAIN (A SIDE)

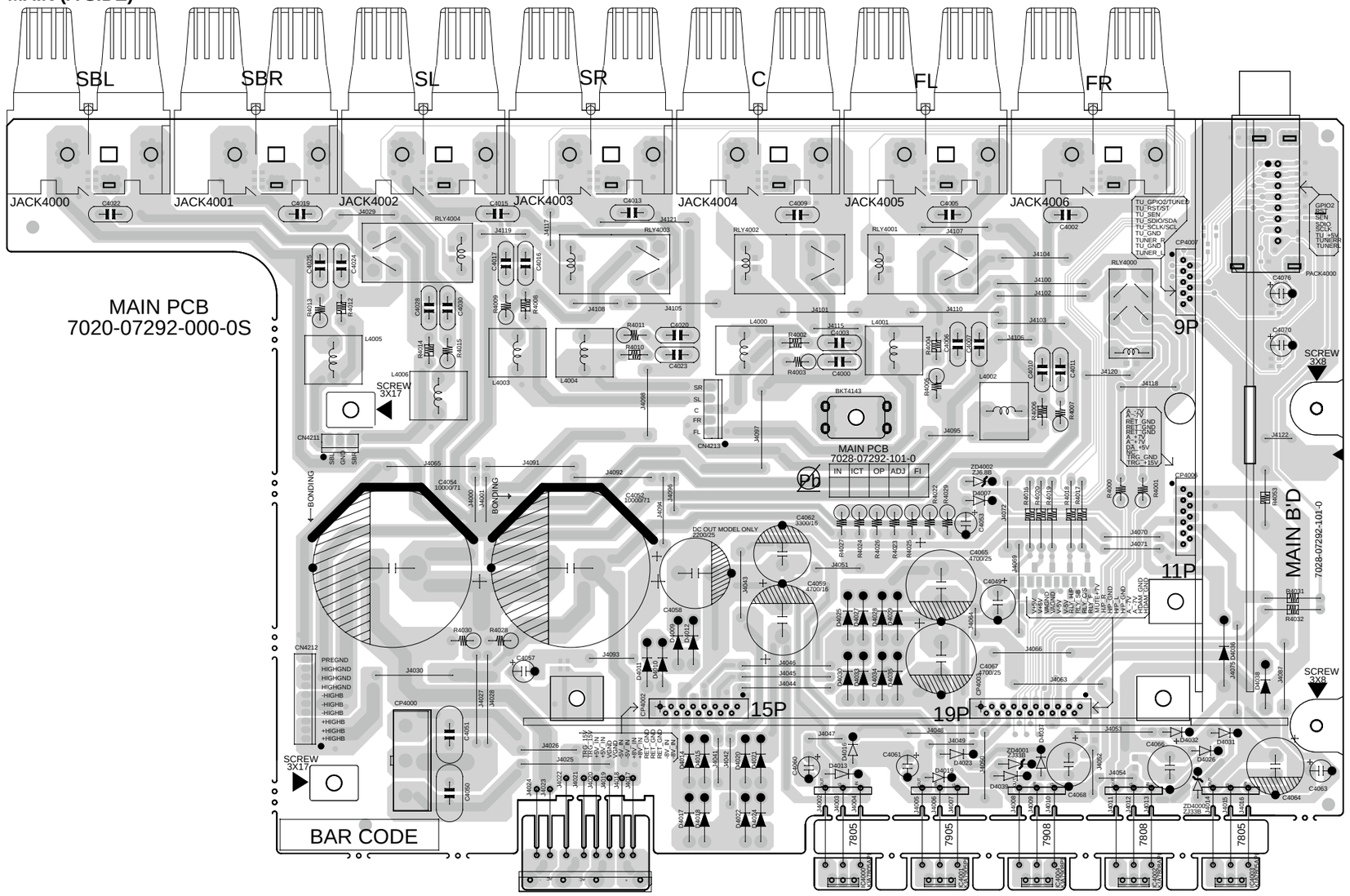
SBL
SBR
SL
SR
C
FL
FR
JACK4000
JACK4001
JACK4002
JACK4003
JACK4004
JACK4005
JACK4006
MAIN PCB
7020-07292-000-0S
SCREW 3X17
SCREW 3X8
9P
11P
15P
19P
MAIN PCB
7028-07292-101-0
MAIN B'D
7028-07292-101-0
BONDING
DC OUT MODEL ONLY
BAR CODE
7805
7905
7908
7808

## MAIN (B SIDE)

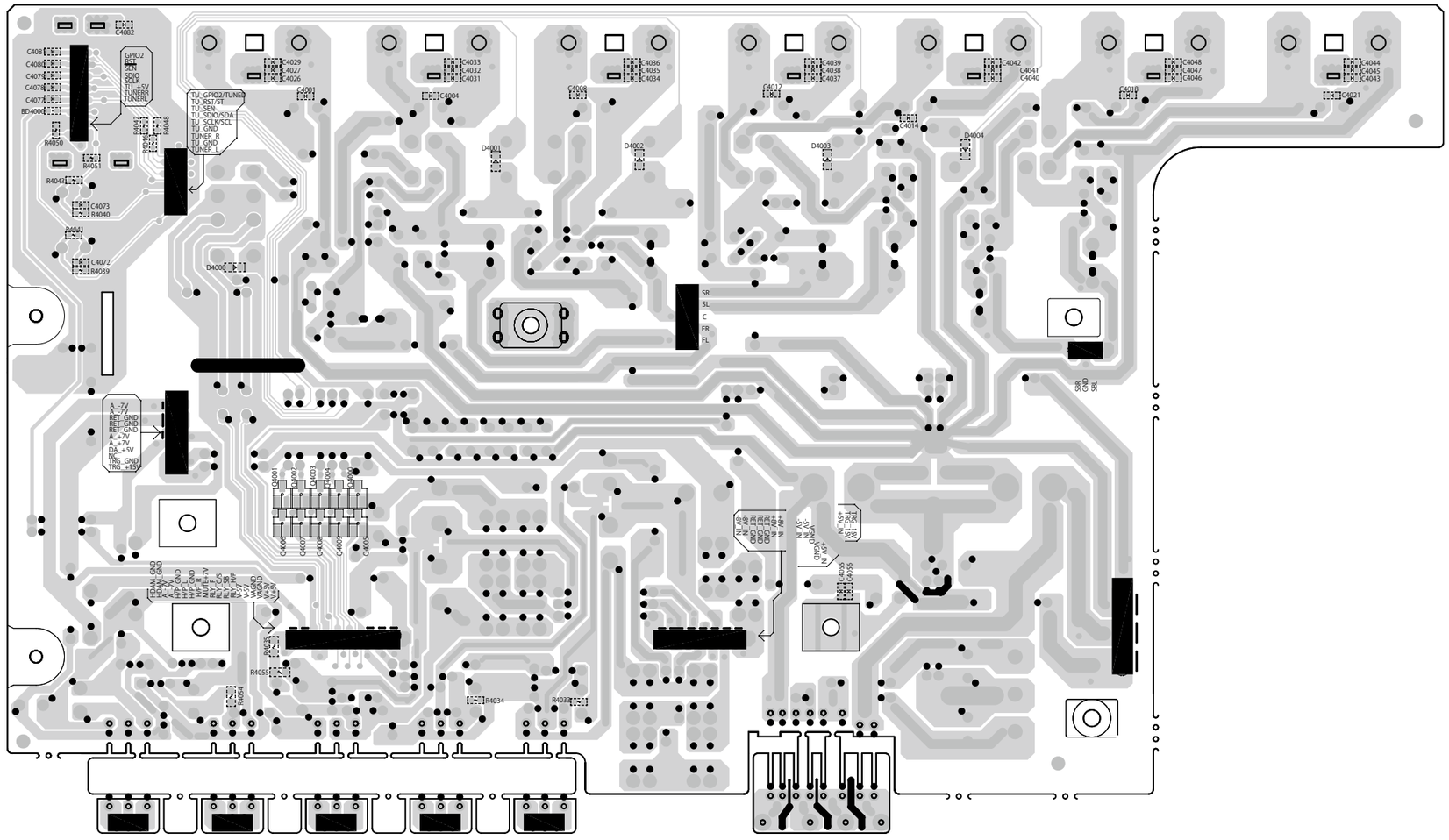
C4082
C4029
C4027
C4026
C4033
C4032
C4031
C4036
C4035
C4034
C4039
C4038
C4037
C4042
C4041
C4040
C4048
C4047
C4046
C4044
C4045
C4043
C4021
C4001
C4004
C4008
C4012
C4014
C4018
D4001
D4002
D4003
D4004
C4073
R4040
C4072
R4039
D4000
SR
SL
C
FR
FL
SRR
GND
SRL
R4050
R4051
R4043
R4041
R4042
R4048
R4047
R4046
R4045
R4044
BD4000
GPIO2
RST
SEN
SDIO
SCLK
TU_+5V
TUNERR
TUNERL
TU_GPIO2/TUNER
TU_RST/ST
TU_SEN
TU_SDIO/SDA
TU_SCLK/SCL
TU_GND
TUNER_R
TU_GND
TUNER_L
A_-7V
A_-7V
RET_GND
RET_GND
RET_GND
A_+7V
A_+7V
DA_+5V
DRC
TRG_GND
TRG_+15V
Q4001
Q4002
Q4003
Q4004
Q4005
Q4006
Q4007
Q4008
Q4009
Q4010
Q4011
Q4012
HDAM_GND
HDAM_5V
A_+7V
A_GND
HP_L_GND
HP_R_GND
MUTE_FL_7V
MUTE_C/S
RLY_5.8
RLY_+5V
D_+5V
VA_GND
VA_5V
VA_GND
VA_5V
R4053
R4054
R4055
R4034
R4033
R4035
R4036
R4037
R4038
R4039
R4040
R4041
R4042
R4043
R4044
R4045
R4046
R4047
R4048
R4049
R4050
R4051
R4052
R4053
R4054
R4055
R4056
R4057
R4058
R4059
R4060
R4061
R4062
R4063
R4064
R4065
R4066
R4067
R4068
R4069
R4070
R4071
R4072
R4073
R4074

## INPUT (A SIDE)

INPUT PCB
7020-07295-000-0S

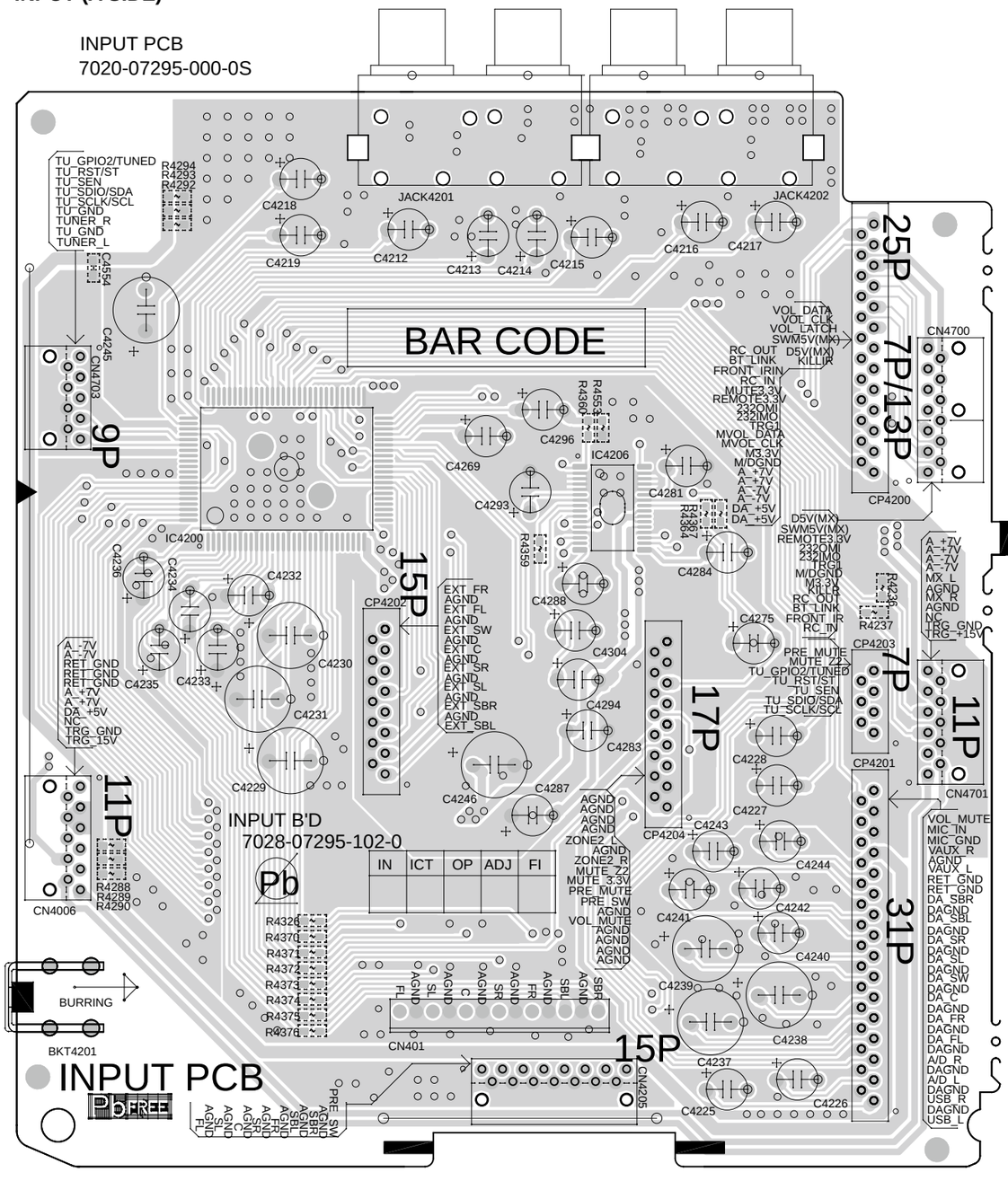


## INPUT (B SIDE)

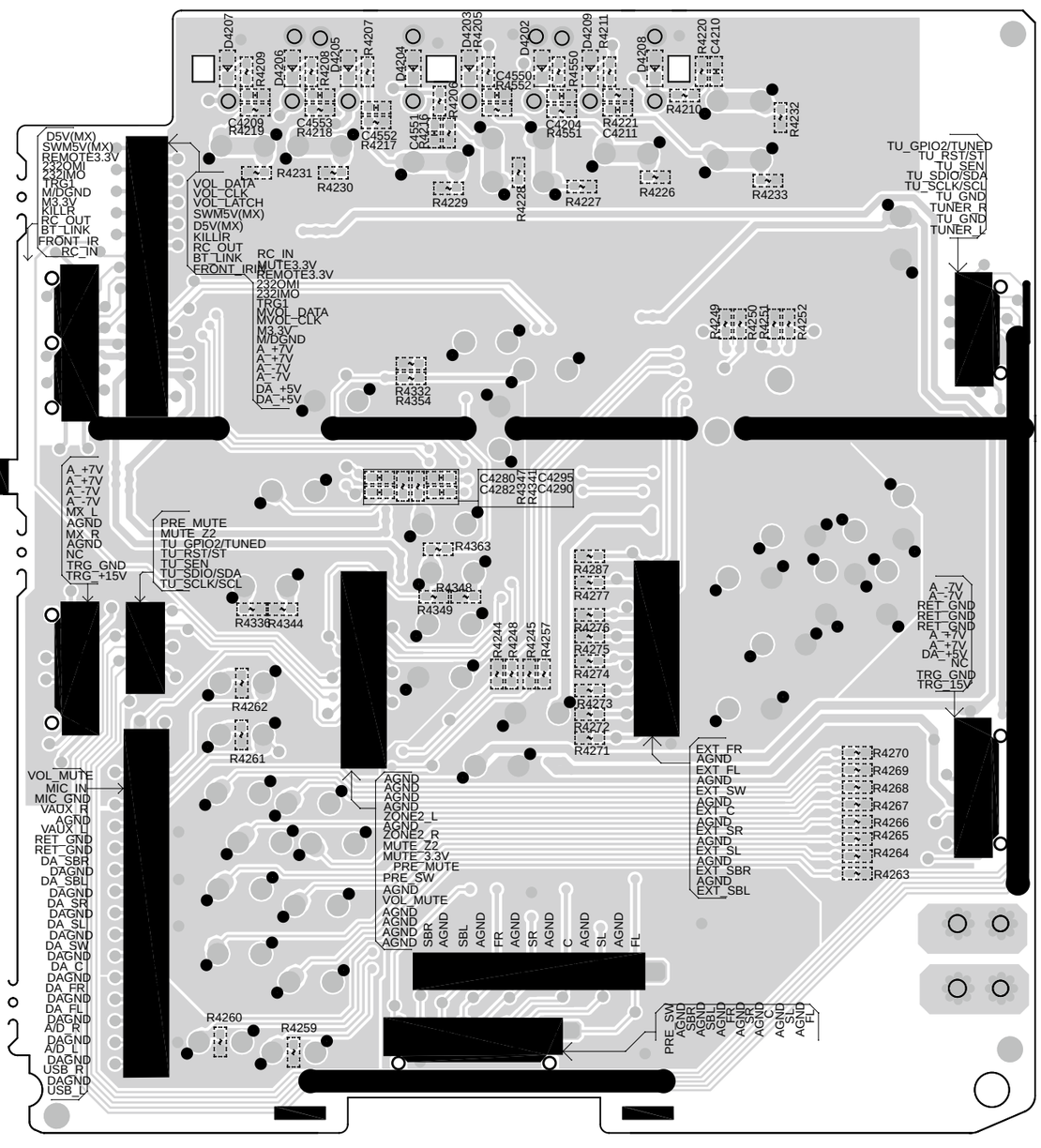

## 7CH AMP (A SIDE)

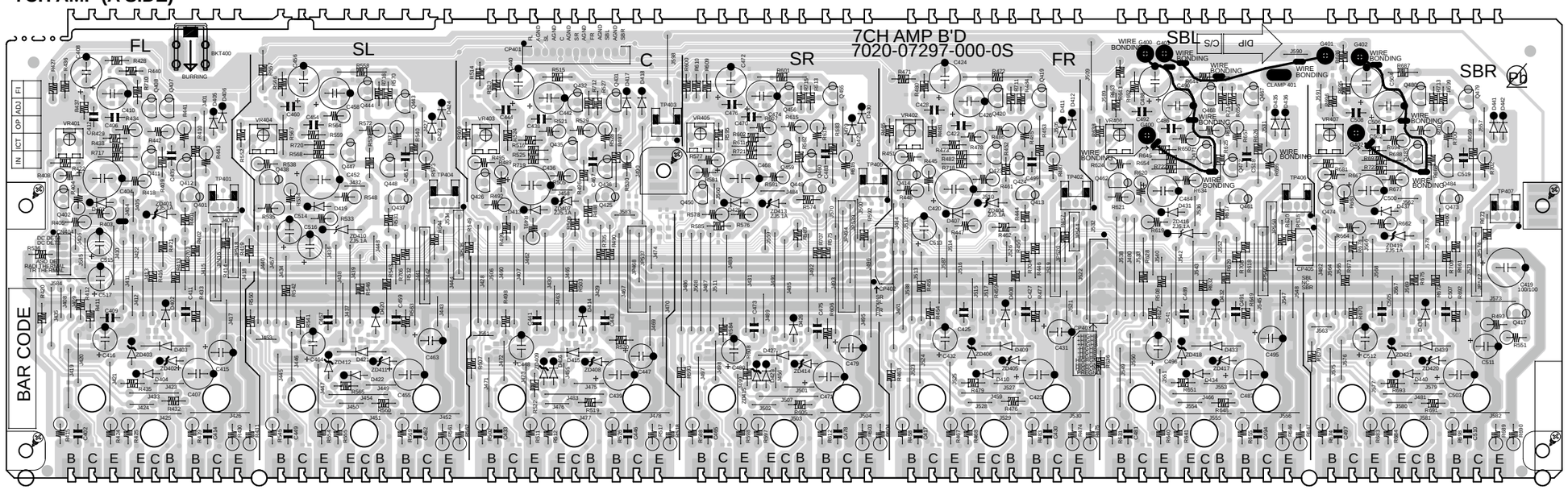


## 7CH AMP (B SIDE)

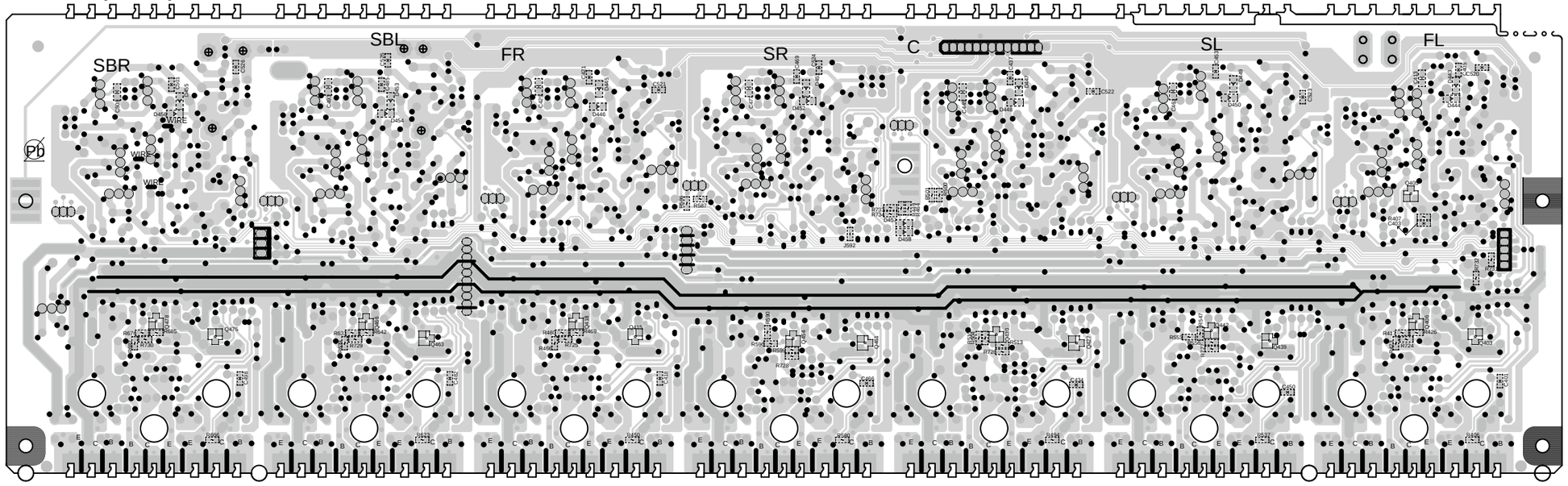

## F HDMI (A SIDE)

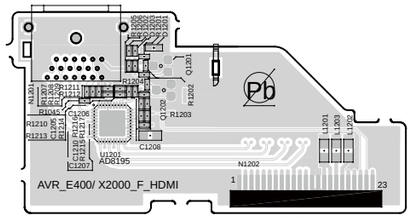


HDMI PCB

## HDMI (A SIDE)

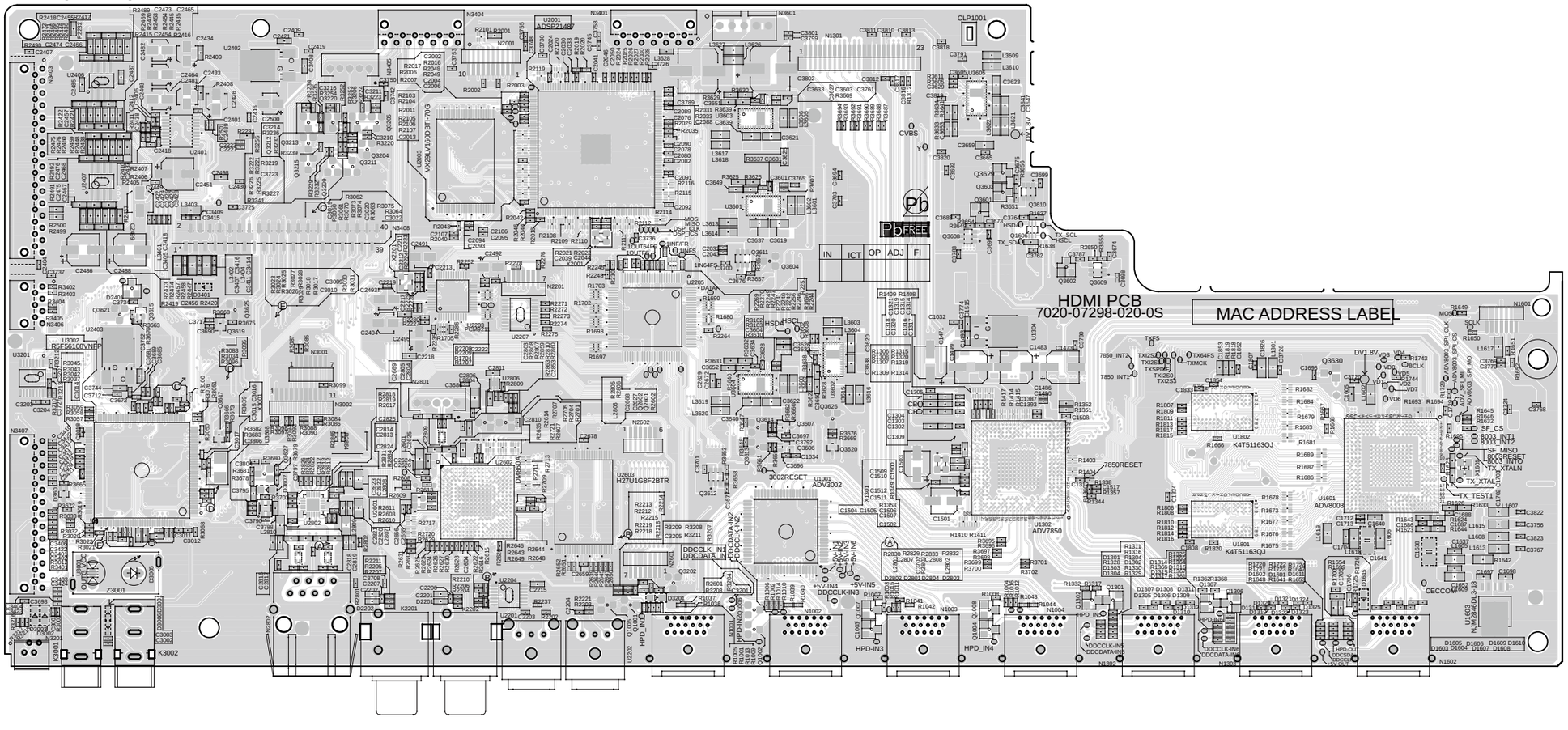

## F HDMI (B SIDE)

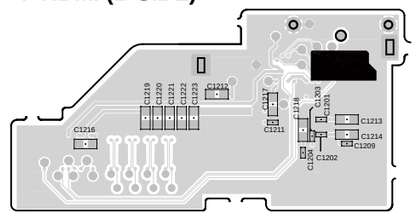

## HDMI (B SIDE)

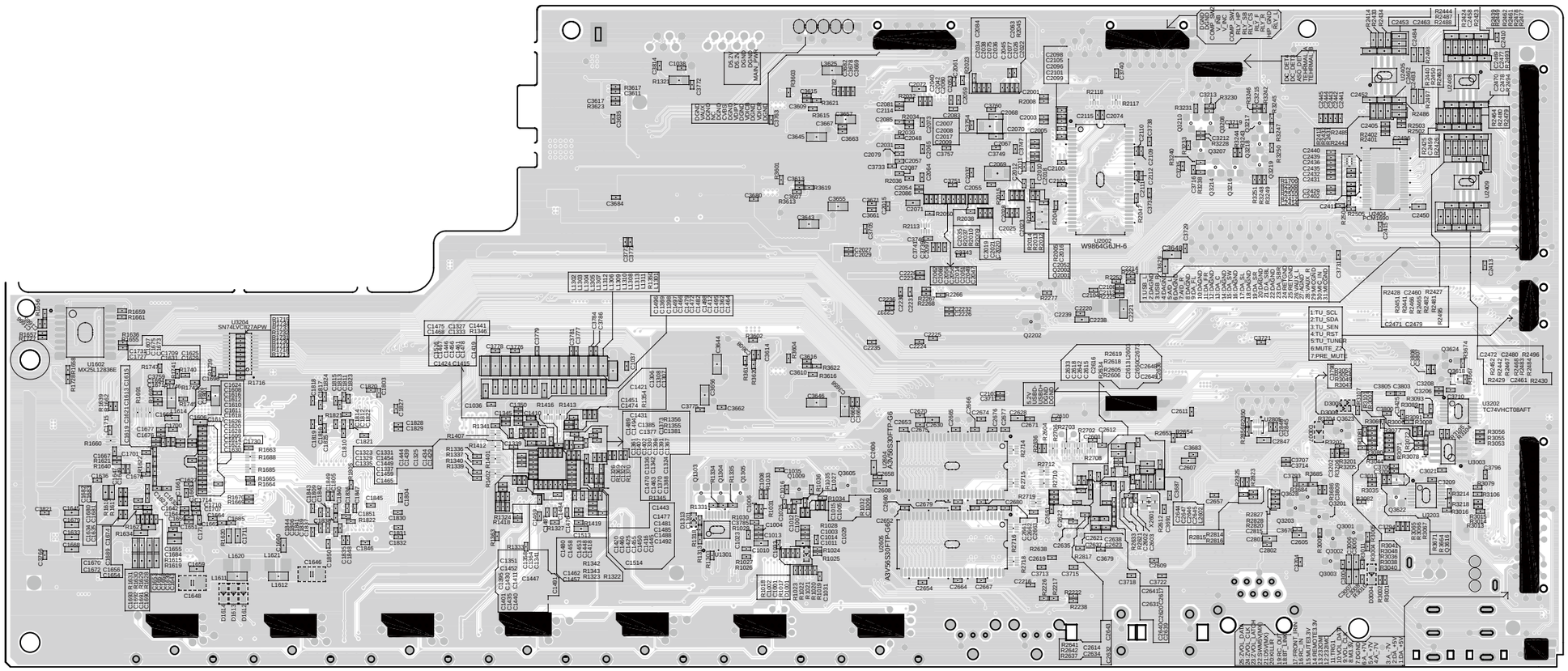

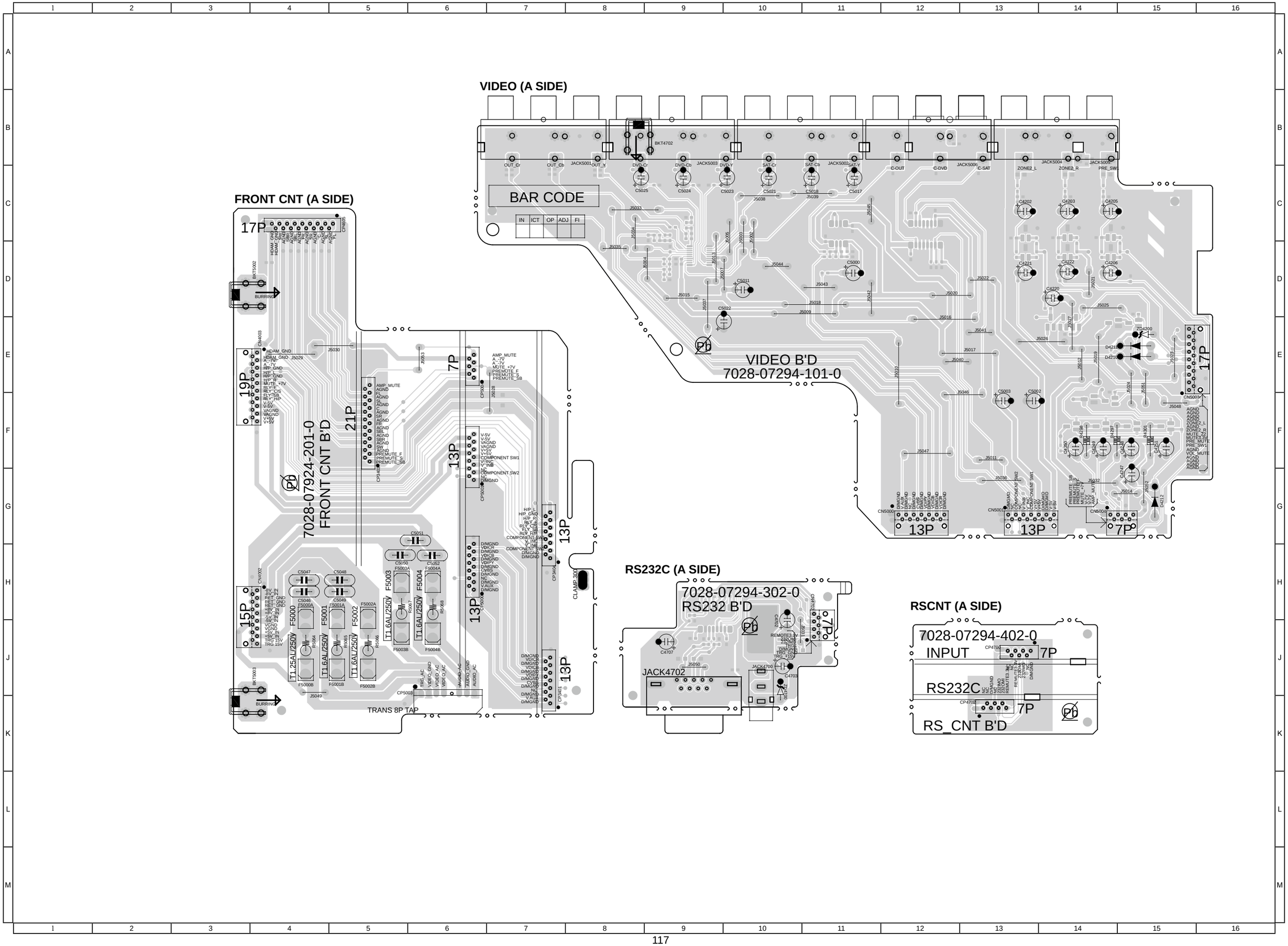
VIDEO (A SIDE)
BAR CODE
IN ICT OP ADJ FI
VIDEO B'D
7028-07294-101-0
FRONT CNT (A SIDE)
7028-07924-201-0
FRONT CNT B'D
TRANS 8P TAP
RS232C (A SIDE)
7028-07294-302-0
RS232 B'D
JACK4702
RSCNT (A SIDE)
7028-07294-402-0
INPUT
RS232C
RS_CNT B'D

## VIDEO (B SIDE)

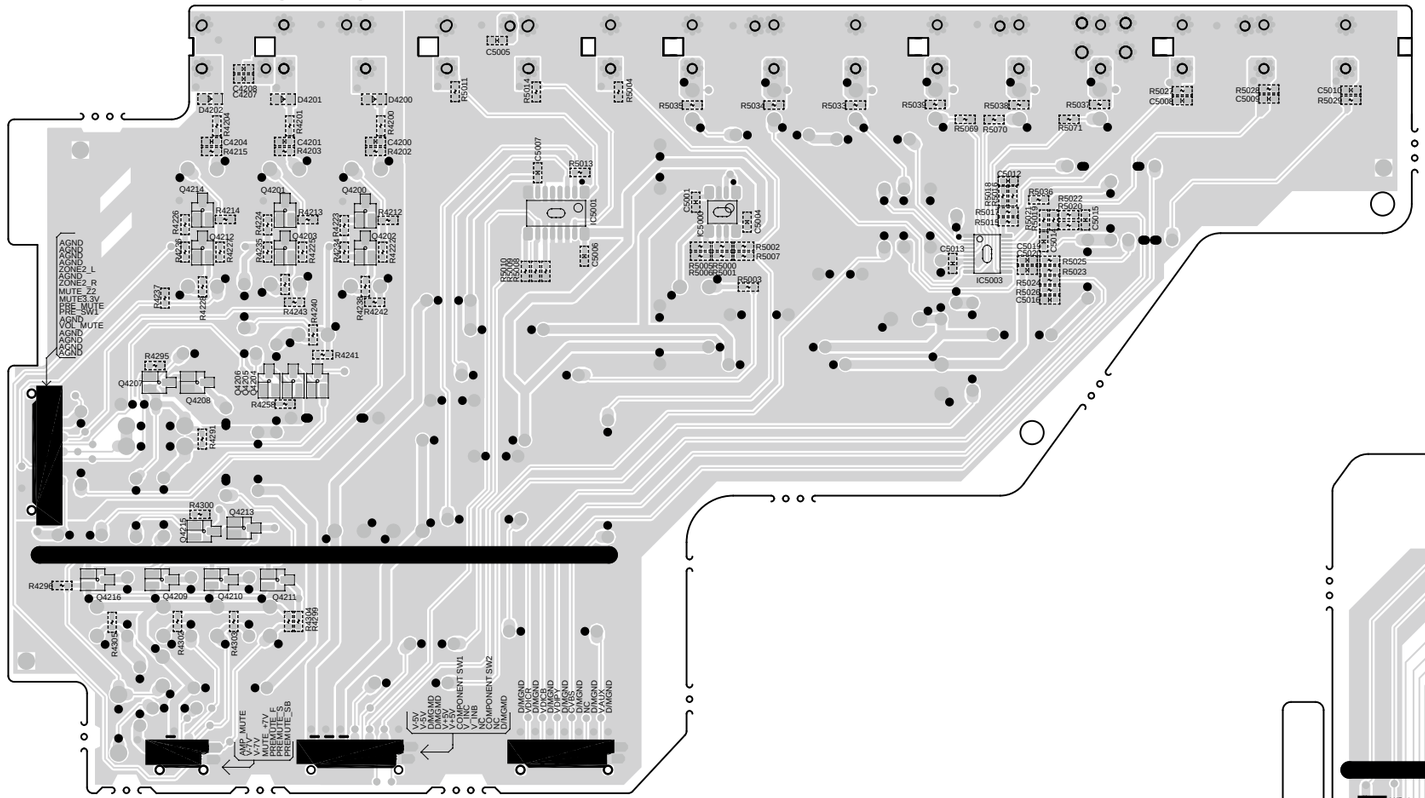
AGND
ZONE2_L
ZONE2_R
MUTE_Z2
MUTE3.3V
PRE_MUTE
PRE_SW1
VOL_MUTE
R4295
Q4207
Q4208
R4296
R4300
Q4213
R4298
Q4216
Q4209
Q4210
Q4211
R4299
R4297
R4301
R4302
R4303
AMP_MUTE
A_7V
MUTE_+7V
PREMUTE_F
PREMUTE_S
PREMUTE_SB
V-5V
V-5V
VAGND
VAGND
V+5V
V+5V
COMPONENT SW1
V_INC
V_INB
NC
COMPONENT SW2
D/MGND
C5005
C4208
C4207
D4202
D4201
D4200
C4204
C4201
C4200
R4215
R4203
R4202
R5011
R5014
R5004
R5039
R5034
R5033
R5038
R5037
R5027
C5008
R5028
C5009
C5010
R5026
C5007
R5003
IC5001
C5006
C5001
R5010
R5009
R5008
R5006
R5005
C5002
C5004
R5002
R5007
R5001
R5000
C5012
R5018
R5019
R5020
R5021
R5017
R5016
R5015
R5012
R5013
R5011
R5022
C5011
C5013
IC5003
C5014
C5015
R5025
R5023
R5024
R5029
C5016
R5071
R5070
R5069
R4227
R4226
R4224
R4225
R4223
R4222
R4221
R4220
R4219
R4218
R4217
R4216
R4214
R4213
R4212
R4211
R4210
R4209
R4208
R4207
R4206
R4205
R4204
R4243
R4240
R4241
R4242
R4244
R4245
R4246
R4247
R4248
R4249
R4250
R4251
R4252
R4253
R4254
R4255
R4256
R4257
R4258
Q4214
Q4201
Q4200
Q4212
Q4215
Q4202
Q4203
Q4205
Q4206
Q4204
Q4217
Q4218
Q4219
Q4220
Q4221
Q4222
Q4223
Q4224
Q4225
Q4226
Q4227
Q4228
Q4229
Q4230
Q4231
Q4232
Q4233
Q4234
Q4235
Q4236
Q4237
Q4238
Q4239
Q4240
Q4241
Q4242
Q4243
Q4244
Q4245
Q4246
Q4247
Q4248
Q4249
Q4250
Q4251
Q4252
Q4253
Q4254
Q4255
Q4256

# AVR_E400_X2000_FRONT 1/1

FL4400
018BT021GINK

| MODEL | AVR N400 | AVR X2000 | |
|---|---|---|---|
| AREA | E3 | E3 | E2/E1C/K |
| OPTION A | X | O | X |
| OPTION B | X | O | O |

TO N3408

HDMI DIGITAL CNT M7

TO HDMI

TO N2801

JACK4401

## SCHEMATIC DIAGRAMS (1/24)

### FRONT UNIT (1/1)

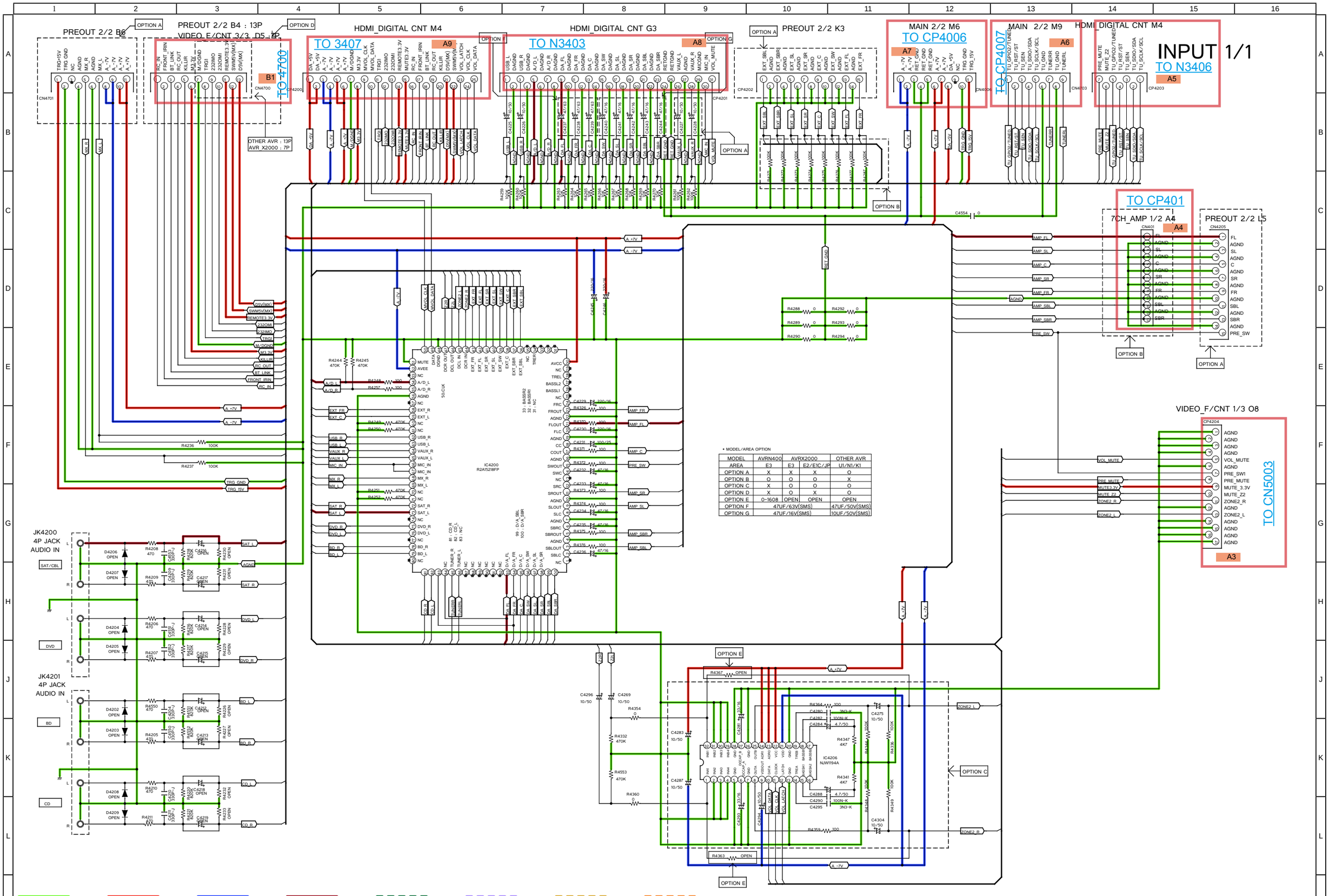


• MODEL/AREA OPTION

| MODEL | AVRN400 | AVRX2000 | | OTHER AVR |
|---|---|---|---|---|
| AREA | E3 | E3 | E2/E1C/JP | U1/N1/K1 |
| OPTION A | X | X | X | O |
| OPTION B | O | O | O | X |
| OPTION C | X | O | O | O |
| OPTION D | X | O | X | O |
| OPTION E | 0~1608 | OPEN | OPEN | OPEN |
| OPTION F | 47UF/63V(SMS) | | | 47UF/50V(SMS) |
| OPTION G | 47UF/16V(SMS) | | | 10UF/50V(SMS) |

SCHEMATIC DIAGRAMS (2/24)

**INPUT UNIT (1/1)**

# SMPS B'D

## E3 OPTION

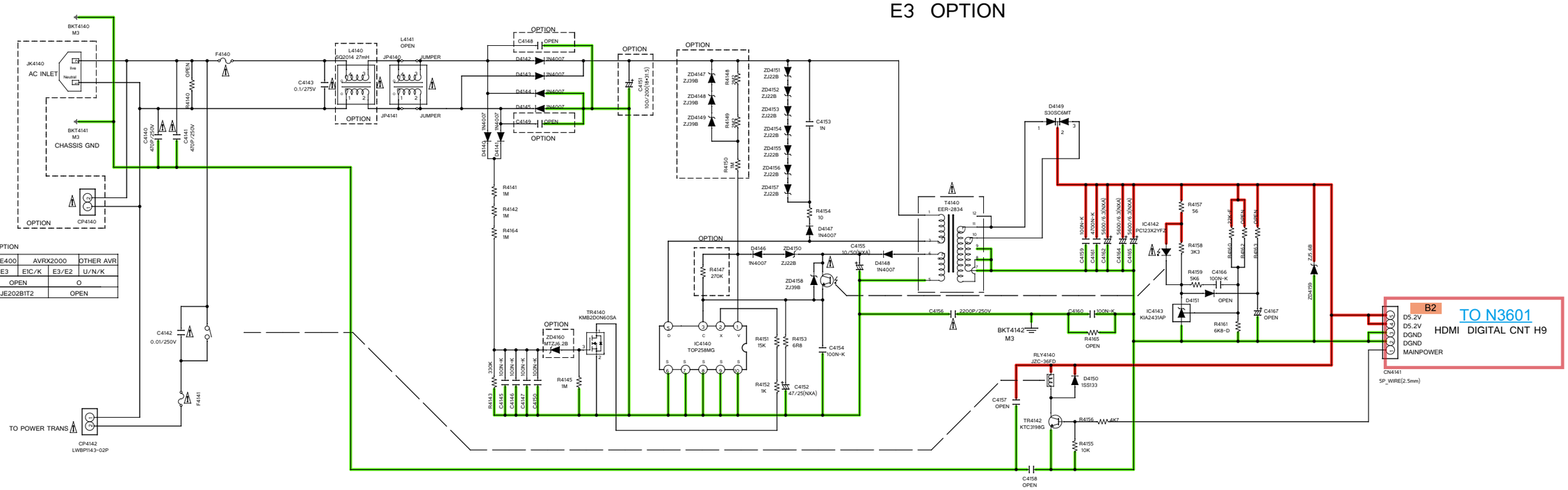


AC CORD OPTION

| | AVRE400 | AVRX2000 | | OTHER AVR |
|---|---|---|---|---|
| | E3 | E1C/K | E3/E2 | U/N/K |
| JK4140 | OPEN | | O | |
| CP4140 | JE202B1T2 | | OPEN | |

FUSE OPTION

| | E3 | | JP | | E1C, E2 | |
|---|---|---|---|---|---|---|
| | F4140 | F4141 | F4140 | F4141 | F4140 | F4141 |
| AVR X2000 | 2A | 6.3A | 2A | 6.3A | 1.6A | 3.15A |
| AVR E400 | 2A | 6.3A | X | X | X | X |

OPTION TABLE

| | ZD4160 | ZD4147 | ZD4148 | ZD4149 | R4148 | R4149 | R4150 | R4147 | C4148 | C4149 | L4140 | C4151 |
|---|---|---|---|---|---|---|---|---|---|---|---|---|
| E3, U | MTZJ6.2B | MTZJ39B | MTZJ39B | MTZJ39B | 2M2 (5) | 2M2 (5) | 1M (5) | 270K | OPEN | OPEN | SQ2014 27mH | 100/200 |
| E2,E1C, N,K | MTZJ16B | OPEN | OPEN | OPEN | OPEN | OPEN | OPEN | 56K | 0.01 | 0.01 | SQ2014 50mH | 100/400 |
| JPN | MTZJ5.6B | MTZJ39B | MTZJ39B | MTZJ39B | 2M2 (5) | 2M2 (5) | 1M (5) | 270K | OPEN | OPEN | SQ2014 27mH | 100/200 |

FUSE OPTION

| | U1B | | N1SG, N1B, K1B | |
|---|---|---|---|---|
| | F4140 | F4141 | F4140 | F4141 |
| OTHER AVR | 2A | 6.3A | 1.6A | 3.15A |

GND LINE
POWER+ LINE
POWER- LINE
ANALOG AUDIO
DIGITAL1 AUDIO
TMDS SIGNAL
VIDEO SIGNAL
COMPONENT(Y) SIGNAL

⚠ INDICATES SAFETY CRITICAL COMPONENTS.
TO REDUCE THE RISK OF ELECTIC SHOCK, LEAKAGE CURRENT OR RESISTANCE MEASUREMENTS SHALL BE CARRIED OUT ( EXPOSED PARTS ARE ACCEPTABLY INSULATED FROM THE SUPPLY CIRCUIT ) BEFORE THE APPLIANCE RETURNED TO THE CUSTOMER.

SCHEMATIC DIAGRAMS (3/24)

**SMPS UNIT (1/1)**

# VIDEO / ZONE2 PART

VIDEO_F/CNT 1/3

CVBS INPUT SW
(MM74HC4051MX)

| INPUT | | | | OUT PUT | AVR N400/X2000/OTHER AVR |
|---|---|---|---|---|---|
| INH | A | B | C | | |
| L | L | L | L | Y0 | MUTE |
| L | L | H | L | Y2 | DVD |
| L | L | L | H | Y4 | CBL/SAT |
| L | L | H | H | Y6 | V.AUX |

• MODEL / AREA OPTION

| MODEL | AVR-E400 | AVR-X2000 | OTHER AVR |
|---|---|---|---|
| AREA | E3 | E3/E2/E1C/JP | U1B/N1B/K1B |
| OPTION A | O | O | X |
| OPTION B | X | X | O |
| OPTION C | X | O | O |

| MUTE(PS) | |
|---|---|
| H | OFF |
| L | ON |

COMPONENT INPUT SW
(NJM2586AVC3)

| INPUT | | OUT PUT | AVR N400/X2000/OTHER AVR |
|---|---|---|---|
| SW1 | SW2 | | |
| H | L | IN2 | CBL/SAT |
| H | H | IN3 | DVD |

GND LINE
POWER+ LINE
POWER- LINE
ANALOG AUDIO
DIGITAL1 AUDIO
TMDS SIGNAL
VIDEO SIGNAL
COMPONENT(Y) SIGNAL

SCHEMATIC DIAGRAMS (4/24)

**VIDEO UNIT (1/3)**

# VIDEO_F/CNT 2/3

## FRONT_CNT PART

| FUSE | F5001,F5002,F5003,F5004 | F5000 |
|---|---|---|
| AVR E400_X2000 | T1.6A/250V | OPEN |
| OTHER AVR | | T1.25A/250V |

MAIN TRANS TAP

CP5003
AC_IN
VGND
AC_IN
AC_IN
AC_IN
RET_GND
AC_IN

R5064 OPEN
F5000 OPEN
C5046 OPEN
F5001 FUSE
R5065 OPEN
C5047 OPEN
C5049 OPEN
F5002 FUSE
R5066 OPEN
C5048 100N(M)-50V
F5003 FUSE
R5067 OPEN
C5050 OPEN
C5052 OPEN
R5068 OPEN
F5004 FUSE
C5051 100N(M)-50V

TRG_15V_A
+5V_IN_A
VGND
-5V_IN_A
+8V_IN_A
RET_GND
-8V_IN_A

HDMI_DIGITAL CNT C4
TO N3401
B9
CP3401
VGND VAUX D/_MGND VCC D/_MGND CVBS D/_MGND VD/PY D/_MGND VD/CB D/_MGND VD/CR D/_MGND

4B
CP5000
D/_MGND VAUX D/_MGND VCC D/_MGND CVBS D/_MGND VD/PY D/_MGND VD/CB D/_MGND VD/CR D/_MGND
TO CN5000
VIDEO_F/CNT 1/3 O5

HDMI_DIGITAL CNT G8
TO N3404
B8
CP3404
VGND D/_MGND COMPONENT SW2 V INB V INC COMPONENT SW1 RLY_H/P RLY_SB RLY_CS RLY_F H/P_R H/P_GND H/P_L

5B
CP5001
D/_MGND NC COMPONENT SW2 NC V INB V INC COMPONENT SW1 V+5V V+5V VAGND VAGND V+5V V+5V
VIDEO_F/CNT 1/3 O3
TO CN5001

3B
CP5004
PREAMUTE_SB PREAMUTE_S PREAMUTE_F MUTE_+7V A_-7V A_-7V AMP_MUTE
TO CN5004
VIDEO_F/CNT 1/3 O7

R5072 OPEN

CP3403
PREAMUTE_SB PREAMUTE_S PREAMUTE_F AGND PRE SW AGND SBR AGND SBL AGND FR AGND SR AGND C AGND SL AGND FL AGND AMP_MUTE
PREOUT 1/2 B8
OPTION B
OTHER AVR

B7
CN4002
TRG 15V TRG 15V +5V_IN +5V_IN VGND VGND -5V_IN -5V_IN +8V_IN +8V_IN RET_GND RET_GND RET_GND -8V_IN -8V_IN
MAIN 2/2 A4
TO CP4002

B6
CN4003
V+5V V+5V VAGND VAGND V+5V V+5V RLY_+V/P RLY_SB RLY_CS RLY_F MUTE_+7V H/P_R H/P_GND H/P_L A_-7V A_-7V HDAM_GND HDAM_GND
MAIN 2/2 M3
TO CP4003

CP4605
HDAM_GND HDAM_GND PRE_SW AGND SBR AGND SBR AGND SBL AGND FR AGND SR AGND C AGND SL AGND FL
OPTION B
OTHER AVR
HDAM 1/1 O4

GND LINE
POWER+ LINE
POWER- LINE
ANALOG AUDIO
DIGITAL1 AUDIO
TMDS SIGNAL
VIDEO SIGNAL
COMPONENT(Y) SIGNAL

SCHEMATIC DIAGRAMS (5/24)
**VIDEO UNIT (2/3)**

## RS232_CNT PART (AVR X2000 E3 ONLY)

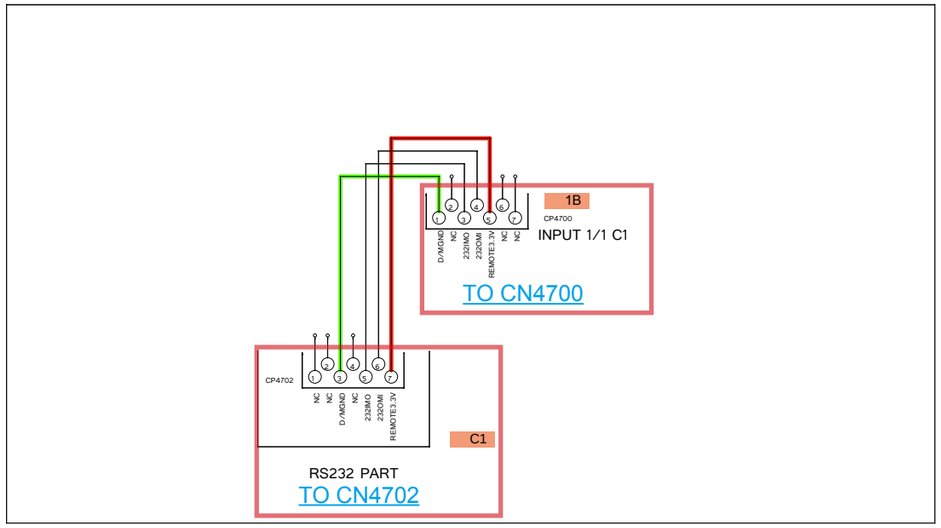


## RS232 / TRG PART

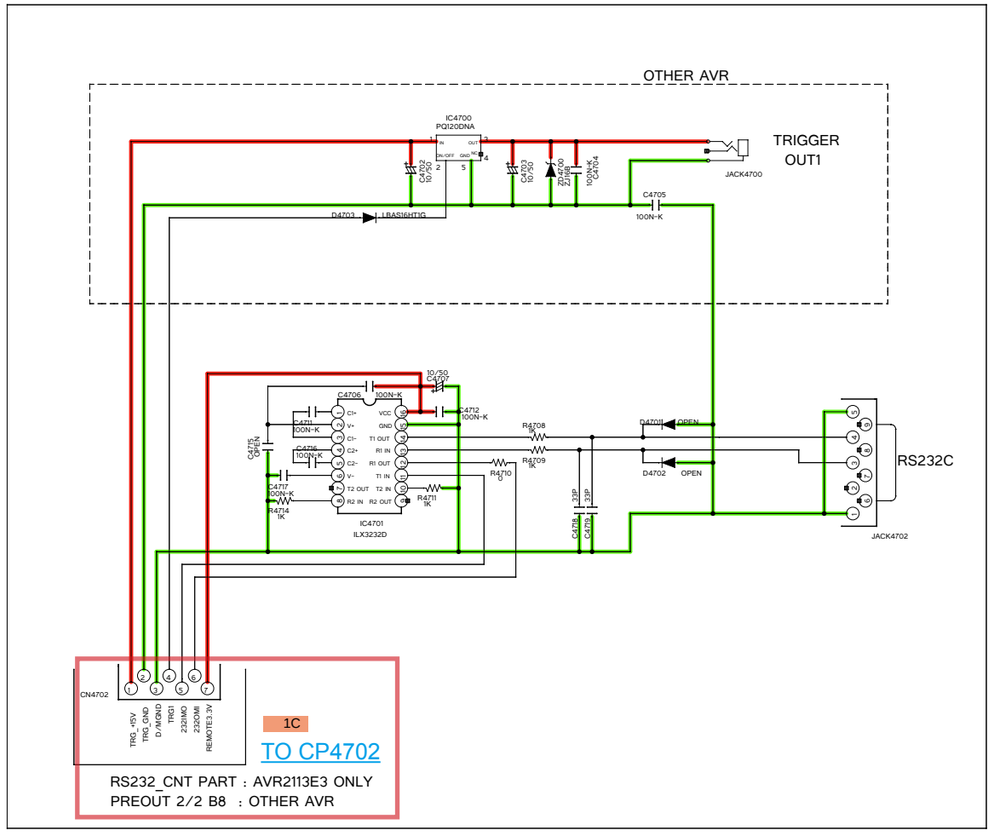


GND LINE
POWER+ LINE
POWER- LINE
ANALOG AUDIO
DIGITAL1 AUDIO
TMDS SIGNAL
VIDEO SIGNAL
COMPONENT(Y) SIGNAL

SCHEMATIC DIAGRAMS (6/24)
**VIDEO UNIT (3/3)**

# AMP B'D 1/2



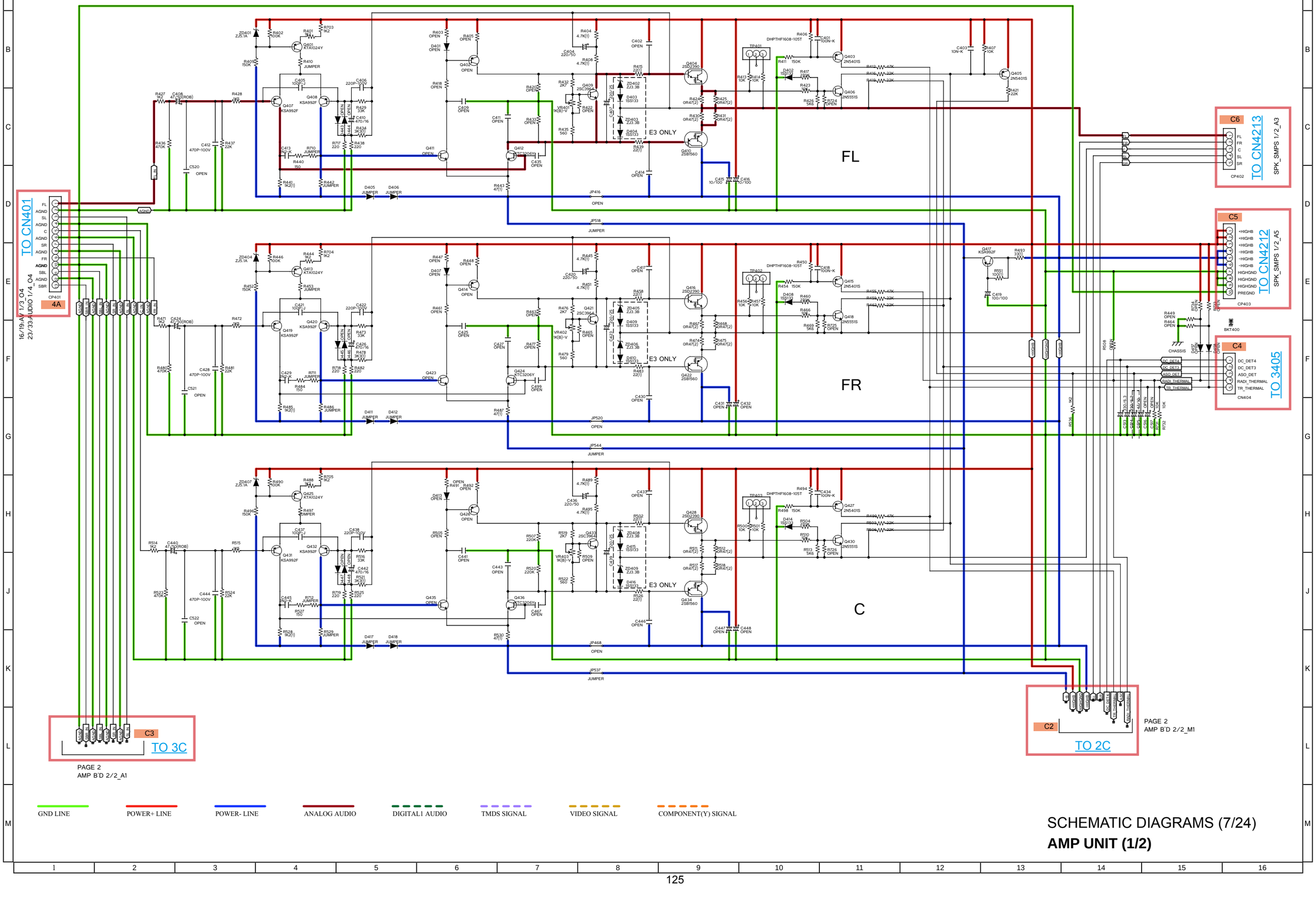


SCHEMATIC DIAGRAMS (7/24)

**AMP UNIT (1/2)**

PAGE 2
AMP B'D 1/2_A10
TO C3
3C

PAGE 2
AMP B'D 1/2_M10
TO C2
2C

# PAGE 2

## AMP B'D 2/2

SL

SR

SBL

SBR

E3 ONLY

C7
TO CN4211
SPK SMPS 1/2 A4

GND LINE
POWER+ LINE
POWER- LINE
ANALOG AUDIO
DIGITAL1 AUDIO
TMDS SIGNAL
VIDEO SIGNAL
COMPONENT(Y) SIGNAL

SCHEMATIC DIAGRAMS (8/24)

**AMP UNIT (2/2)**

# SPK PART

MAIN 1/2

TO CP402 — 7CH_AMP 1/2 O3 — 6C — CN4213 — FL, FR, C, SL, SR

TO CP405 — 7CH_AMP 2/2 N9 — 7C — CN4211 — SBL, SBLGND, SBR

TO CP403 — 7CH_AMP 1/2 O5 — 5C — CN4212 — +HIGHB, +HIGHB, +HIGHB, -HIGHB, -HIGHB, -HIGHB, HIGHGND, HIGHGND, HIGHGND, PREGND

OPTION I

L4000 SP-2507 — R4002 10 — C4000 47N(M)-50V — R4003 10(2) — C4003 OPEN
L4001 SP-2507 — R4004 10 — C4006 47N(M)-50V — R4005 10(2) — C4007 OPEN
L4002 SP-2507 — R4006 10 — R4007 10(2) — C4011 47N(M)-50V — C4010 OPEN
L4003 SP-2507 — R4008 10 — R4009 10(2) — C4017 47N(M)-50V — C4016 OPEN
L4004 SP-2507 — R4010 10 — R4011 10(2) — C4023 47N(M)-50V — C4020 OPEN
L4005 SP-2507 — R4012 10 — R4013 10(2) — C4025 47N(M)-50V — C4024 OPEN
L4006 SP-2507 — R4014 10 — R4015 10(2) — C4030 47N(M)-50V — C4028 OPEN

RLY4000 BC3-12 — R4000 470(2) — H/PR, HPV, R4001 470(2) — H/PL
RLY4001 JZC-42F — FV
RLY4002 JZC-42F — CV
RLY4003 JZC-42F — SLV
RLY4004 JZC-42F — SRV

OPTION J — C4001 OPEN, C4004 OPEN, C4008 OPEN, C4012 OPEN, C4014 OPEN, C4018 OPEN, C4021 OPEN
OPTION K — C4002 22N, C4005 22N, C4009 22N, C4013 22N, C4015 22N, C4019 22N, C4022 22N

JACK4000 — FR_GND, FR_A, FL_GND, FL_A, C_GND, CEN
JACK4001 — SR_GND, SR, SL_GND, SL, SBR_GND, SBR, SBL_GND, SBL

C4025 - C4026 1N-K
C4027 -
C4028 -
C4029 - C4030 1N-K
C4031 -
C4032 -
C4033 1N-K
C4034 -
C4035 1N-K
C4036 -
C4037 -
C4038 1N-K
C4039 -
C4040 -
C4041 1N-K
C4042 -
C4043 -
C4044 1N-K
C4045 -
C4046 -
C4047 1N-K
C4048 -
CHASISGND

*MODEL/AREA OPTION

| MODEL | AVR-E400 | AVR-X2000 | | OTHER AVR |
|---|---|---|---|---|
| AREA | E3 | E3/E1C | E2 | U1B/N1B/K1B |
| OPTION I | OPEN | | | 47NF(M)/50V |
| OPTION J | OPEN | | | 2N2F/50V |
| OPTION K | 22N/100V(PP 2A223J) | | | OPEN |
| OPTION L | 100N/100V(2A104J) | | | 100N/250V |
| OPTION M | 0.1UF/50V(PE 1H221J) | | | 0.1UF/50V(SMS) |
| OPTION O | 10000uF/71V | 12000uF/71V | | 10000uF/71V |

Q4000 RT1P141C — R4016 20 — D4000 LBAS16HT1G — Q4005 RT1N141C
Q4001 RT1P141C — R4017 20 — D4001 LBAS16HT1G — Q4006 RT1N141C
Q4002 RT1P141C — R4018 20 — D4002 LBAS16HT1G — Q4007 RT1N141C
Q4003 RT1P141C — R4019 20 — D4003 LBAS16HT1G — Q4008 RT1N141C
Q4004 RT1P141C — R4020 20 — D4004 LBAS16HT1G — Q4009 RT1N141C
C4049 100/250
EFRL, EFLL, EC.FL.RL, EC.FR.RL, EBRR

REV, FL, C, SW, REV

R4022 OPEN — R4023 OPEN — R4024 OPEN
R4025 1K1(1) — R4026 1K1(1) — R4027 1K1(1)
D4007 1SS133
R4029 10K(1/4)
ZD4002 ZJ6.8B
C4053 10/50

REG PART — C8 — TO 8C
+12V_IN, REM_GND, +5V_IN, MUTE+12V

OPTION O — C4052 10000/71 — R4028 OPEN — C4054 10000/71 — R4030 OPEN

CP4000 — AC1, GND, AC2
OPTION L — C4050 100N — C4051 100N
D4008 D10SB60
OPTION M — C4055 OPEN — C4056 - — C4057 100N(M)-50V
CHASISGND

GND LINE — POWER+ LINE — POWER- LINE — ANALOG AUDIO — DIGITAL1 AUDIO — TMDS SIGNAL — VIDEO SIGNAL — COMPONENT(Y) SIGNAL

SCHEMATIC DIAGRAMS (9/24)

**MAIN UNIT (1/2)**

# TUNER / REG PART

MAIN 2/2

TO C8 SPK PART 8C

VIDEO_F/CNT 2/3 G9

TO CN4002

7B

VIDEO_F/CNT 2/2 J9

TO CN4003

6B

INPUT 1/1 K1

TO CN4006

7A

INPUT 1/1 L1

TO CN4703

6A

OPTION A

OPTION C

OPTION D

OPTION E

OPTION F

OPTION G

OPTION H

OPTION B

OPTION A

AVRE400/X2000 : 4700UF/25V
OTHER AVR : 6800UF/25

IC4000 KIA7805API

IC4001 KIA7905PI

IC4002 KIA7808API

IC4003 KIA7805API

IC4004 KIA7908PI

D6023 RB721Q-40(SCHOTTKY)

D4013 RB721Q-40(SCHOTTKY)

PACK4000

BD4000 CBW160808U121T

CHASISGND

• MODEL / AREA OPTION

| MODEL | AVR-E400 | AVR-X2000 | OTHER AVR |
|---|---|---|---|
| AREA | E3 | E3/E2/EIC | U1B/N1B/K1B |
| OPTION A | X | | O |
| OPTION B | O | | X |
| OPTION C | 4700UF/25V | | 6800UF/25V |
| OPTION D | KIA7808API | | BA08T |
| OPTION E | 470UF/50V(SHL) | | 100UF/16V(SMS) |
| OPTION F | 470UF/50V(SMS) | | 100UF/16V(SMS) |
| OPTION G | OPEN | | ZJ33B |
| OPTION H | OPEN | | RB721Q |

GND LINE
POWER+ LINE
POWER- LINE
ANALOG AUDIO
DIGITAL1 AUDIO
TMDS SIGNAL
VIDEO SIGNAL
COMPONENT(Y) SIGNAL

SCHEMATIC DIAGRAMS (10/24)

**MAIN UNIT (2/2)**

# HDMI SW
# ADV3002

HDMI_IN1
HDMI_IN2
HDMI_IN3
HDMI_IN4

N1001 AD3PBC19GG-T
N1002 AD3PBC19GG-T
N1003 AD3PBC19GG-T
N1004 AD3PBC19GG-T

HP_DET
+5V
GND
DDC_SDA
DDC_SCK
N.C
CE_REMOTE
TXC-
TXC_SHLD
TXC+
TX0-
TX0_SHLD
TX0+
TX1-
TX1_SHLD
TX1+
TX2-
TX2_SHLD
TX2+

CEC_COM
RXC_5V
RXE_5V
RXF_5V
RXG_5V
DDCC_SCL
DDCC_SDA

U1001
ADV3002BSTZ
DEVICE ADDRESS : 0x90

61.EDID_SCL
62.EDID_SDA
63.EDID_ENABLE
40.I2C_SDA
39.I2C_ADDR1
38.INHCLK*
78.PSV_E
79.PSV_F
80.PSV_G
23.INGDATA
22.INGDATA
21.AVEE

HSDA
HSCL
ADV3002_RST
TX_EN

D2
RESETB
FROM
D.SUPPLY
TO 2D

C9
TO
HDMI RX
ADV7850
TO 9C

D1
TO 1D

GND LINE
POWER+ LINE
POWER- LINE
ANALOG AUDIO
DIGITAL1 AUDIO
TMDS SIGNAL
VIDEO SIGNAL
COMPONENT(Y) SIGNAL

SCHEMATIC DIAGRAMS (11/24)
**HDMI UNIT (1/13)**

# FRONT HDMI

## AVR-E400/X2000

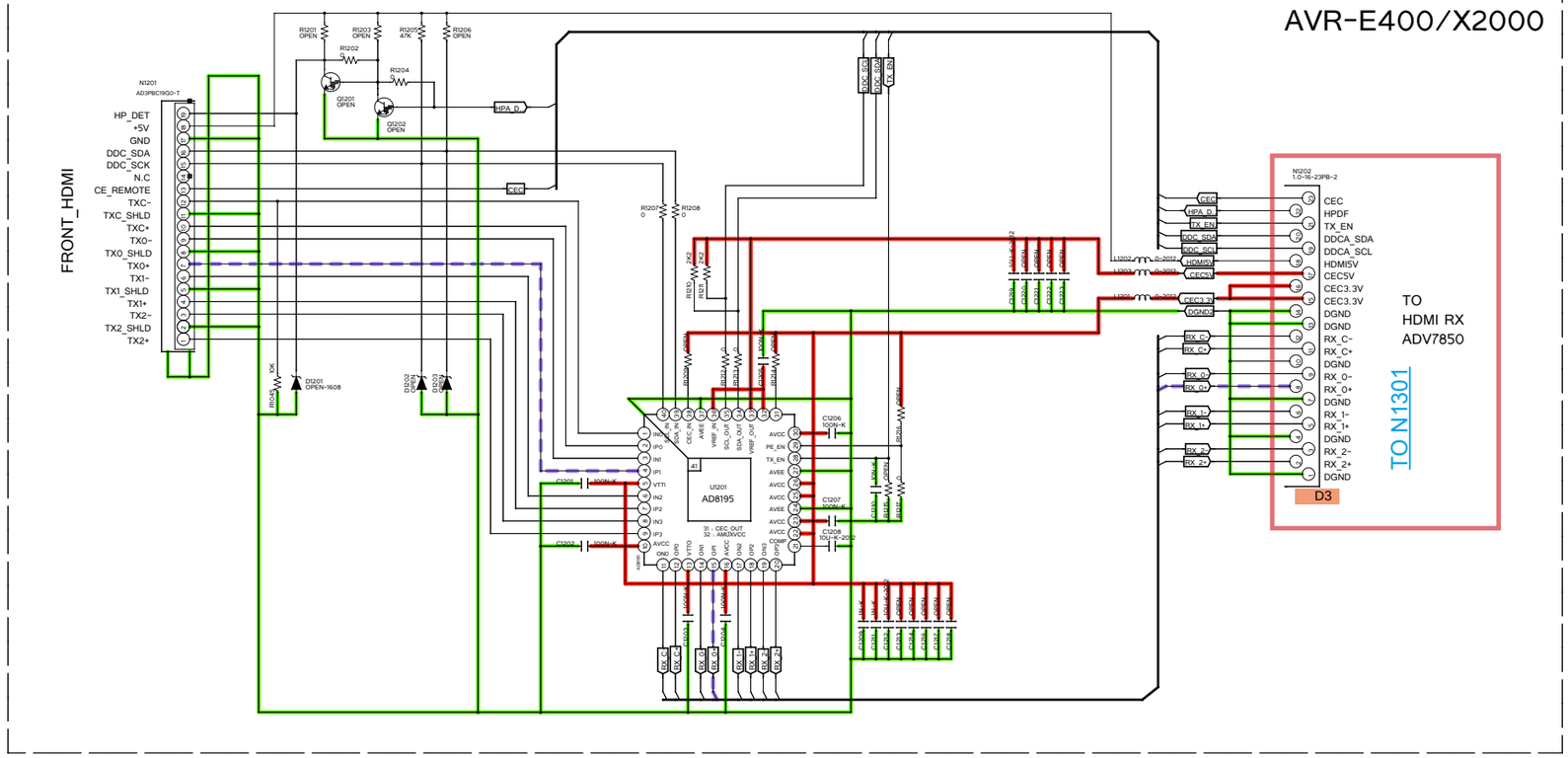


## OTHER AVR

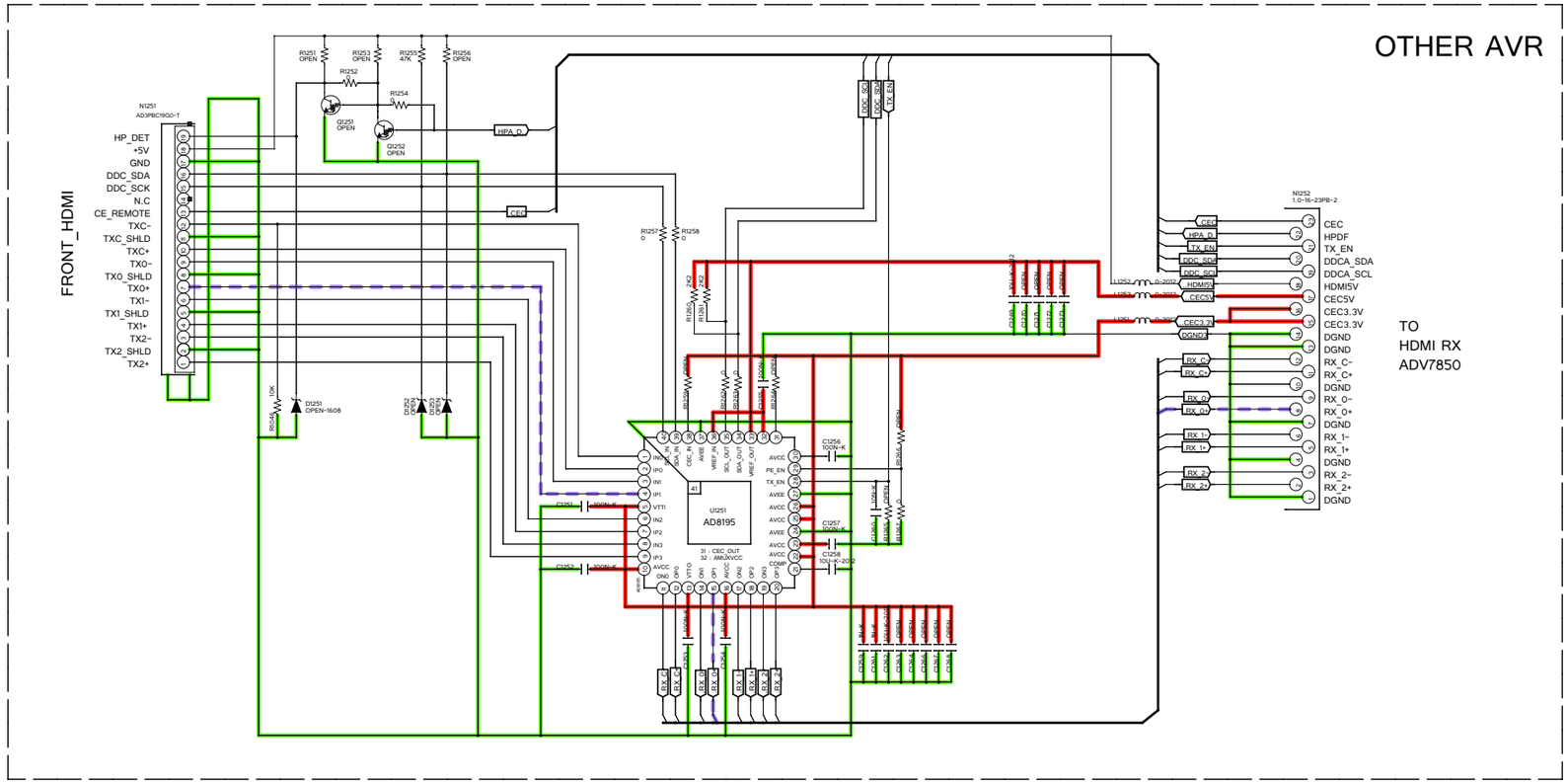


GND LINE | POWER+ LINE | POWER- LINE | ANALOG AUDIO | DIGITAL1 AUDIO | TMDS SIGNAL | VIDEO SIGNAL | COMPONENT(Y) SIGNAL

SCHEMATIC DIAGRAMS (12/24)

**HDMI UNIT (2/13)**

# NET PHY

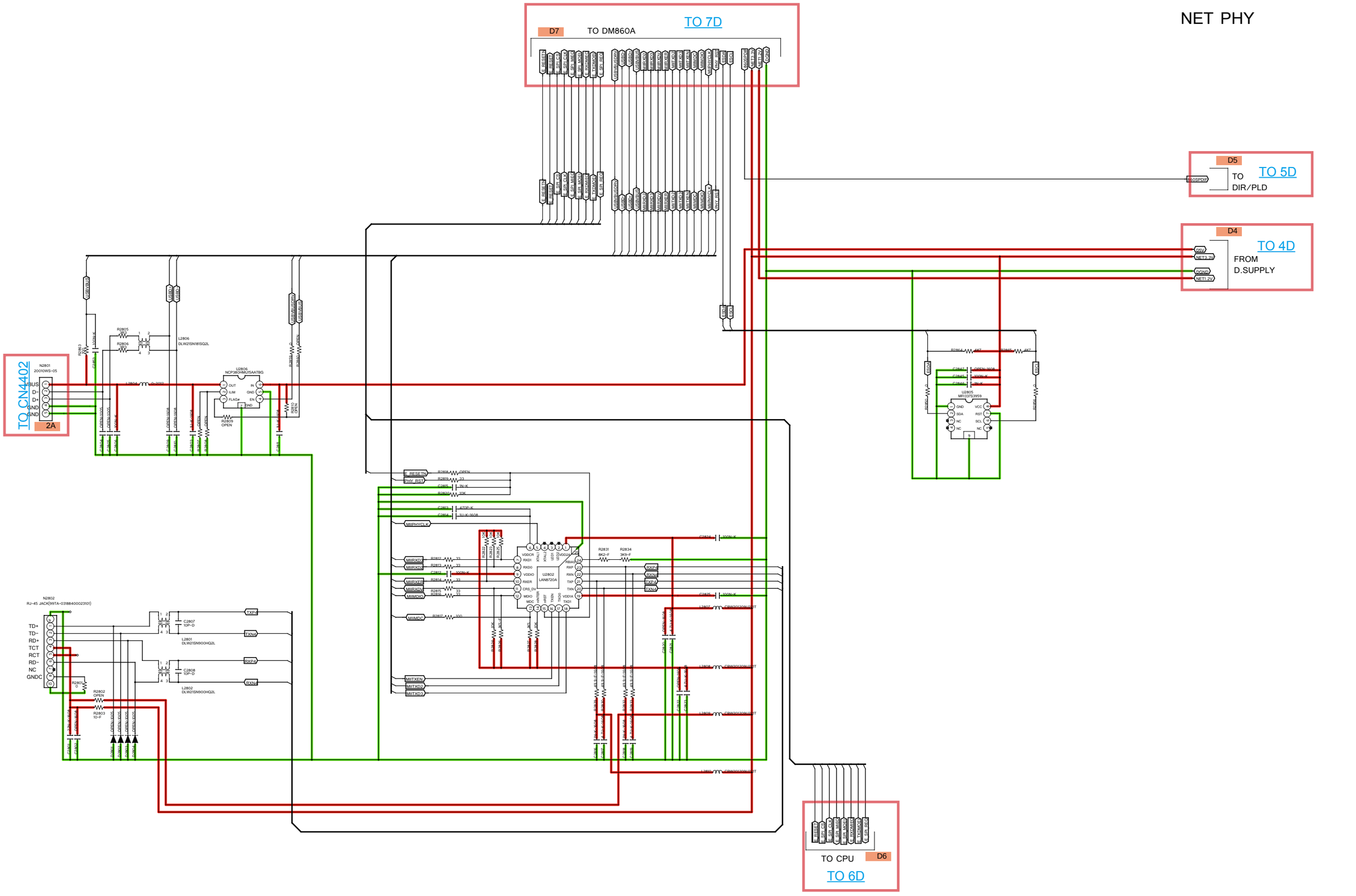


SCHEMATIC DIAGRAMS (13/24)

**HDMI UNIT (3/13)**

# DM860A

SDRAM

JTAG

MP_OPEN

N2601 1.0-16-7PB-2

GND
RX
TX
3.3V

DEBUG_RX
DEBUG_TX

N2602 1.0-16-6PB-2

ETMS
ETCK
ETDI
ETDX

R2601 OPEN

R2704 33*4(4R)
R2705 33*4(4R)
R2706 33*4(4R)

E_RXDMIEN
DEBUG_TX
E_TXDMOD
DEBUG_RX

E_SPI_CLK
E_SPI_MIEN
E_SPI_MOEN
E_SPI_CS

R2709 20K
R2710 20K
R2711 20K
R2712 20K
R2713 20K

R2707 10K-D-1608
R2681 49K2-D-1608
R2708 10K*4(4R)

R2654 10K
R2653
E_RESETN
Q2601 OPEN
Q2602 OPEN
C2601 IN-K
R2655 10K
E_RESET

R2603 0R
U2601 OPEN-22.5792MHz

R2608 33
R2609 33
R2610 33

E_SPI_REQ
R2638 20K
R2639 20K
R2640 20K

C2605 12P-G
X2601 24MHz(XS-3225)
C2606 12P-G
R2612 0
R2621 1M
R2613 20K

R2614 3K-F-1608

JTAG
UART
SPI
RESET
CLOCK
RTC
ETHER

TCK
TDO
TMS
TDI
TXD0
TXD1
RXD0
RXD1
SPICLK
SPIDOUT
SPIDIN
SPINCS0
SPINCS1
NRES12OUT
NRES33OUT
XTALI
XTALO
RTCXIN
RTCXOUT
CPRST
MIIRXDV
MIIRXCLK
MIIRXD3
MIIRXD2
MIIRXD1
MIIRXD0
MIITXD3
MIITXD2
MIITXD1
MIITXD0
MIITXEN
MIIMDIO
MIIMDC
MIIPHYCLK
PHY_RST

U2602
DM860A

| | 1 | 2 | 3 | 4 | 5 | 6 | 7 | 8 | 9 | 10 | 11 | 12 | 13 | 14 | 15 | 16 | 17 | 18 |
|---|---|---|---|---|---|---|---|---|---|---|---|---|---|---|---|---|---|---|
| A | A1 USBD- | A2 NET3.3V | A3 DGND | A4 | A5 | A6 NET3.3V | A7 | A8 | A9 | A10 HIGHZ | A11 | A12 | A13 | A14 RXD1 | A15 TDO | A16 TDI | A17 DM_A0 | A18 DM_A1 |
| B | B1 USBD+ | B2 NET3.3V | B3 DGND | B4 | B5 | B6 DGND | B7 | B8 | B9 | B10 TEST1_DM | B11 | B12 | B13 TXD1 | B14 RXD0 | B15 TMS | B16 SPICLK | B17 SPINCS1 | B18 DM_A2 |
| C | C1 DGND | C2 USBREXT | C3 | C4 USBXI | C5 NRES12OUT | C6 DGND | C7 RREF | C8 | C9 | C10 | C11 | C12 | C13 TXD0 | C14 TCK | C15 SPINCS0 | C16 DM_A3 | C17 DM_A4 | C18 DM_A5 |
| D | D1 NET1.2V | D2 USBVBUS | D3 | D4 NRES33OUT | D5 NRES33REF | D6 NRES12REF | D7 NET3.3V | D8 NET1.2V | D9 | D10 | D11 | D12 | D13 NRESET | D14 SPIDIN | D15 SPIDOUT | D16 DM_A6 | D17 DM_A7 | D18 DM_A8 |
| E | E1 DGND | E2 USBID | E3 USBVBUSDRV | E4 | E5 | E6 NET1.2V | E7 NET1.2V | E8 NET3.3V | E9 NET3.3V | E10 NET1.2V | E11 NET1.2V | E12 NET3.3V | E13 NET3.3V | E14 | E15 DM_A9 | E16 DM_A10 | E17 DM_A11 | E18 DM_A12 |
| F | F1 NET3.3V | F2 RTCXIN | F3 VDD33PLL | F4 | F5 NET3.3V | F6 DGND | F7 DGND | F8 DGND | F9 DGND | F10 DGND | F11 DGND | F12 DGND | F13 DGND | F14 NET1.2V | F15 DM_A13/RAS | F16 DM_A14/CAS | F17 DM_A15/BA0 | F18 DM_A16/BA1 |
| G | G1 VDD12DCO | G2 RTCXOUT | G3 DGND | G4 | G5 NET3.3V | G6 DGND | G7 DGND | G8 DGND | G9 DGND | G10 DGND | G11 DGND | G12 DGND | G13 DGND | G14 NET1.2V | G15 DM_A17/DQM | G16 DM_A18/DQM | G17 | G18 |
| H | H1 DGND | H2 DGND | H3 VDD12PLL | H4 | H5 NET1.2V | H6 DGND | H7 DGND | H8 DGND | H9 DGND | H10 DGND | H11 DGND | H12 DGND | H13 DGND | H14 NET3.3V | H15 | H16 | H17 | H18 NCS3 |
| J | J1 E_SPI_REQ | J2 CPRST | J3 XTALO | J4 | J5 NET1.2V | J6 DGND | J7 DGND | J8 DGND | J9 DGND | J10 DGND | J11 DGND | J12 DGND | J13 DGND | J14 NET3.3V | J15 NCS0 | J16 NCS1 | J17 NCS2 | J18 MEMCKE |
| K | K1 PDOUT0 | K2 VCO0 | K3 XTALI | K4 | K5 NET3.3V | K6 DGND | K7 DGND | K8 DGND | K9 DGND | K10 DGND | K11 DGND | K12 DGND | K13 DGND | K14 NET1.2V | K15 MEMCLK | K16 NWE | K17 NOE | K18 NWAIT |
| L | L1 AVDCLK | L2 | L3 | L4 | L5 NET3.3V | L6 DGND | L7 DGND | L8 DGND | L9 DGND | L10 DGND | L11 DGND | L12 DGND | L13 DGND | L14 NET1.2V | L15 DM_D3 | L16 DM_D2 | L17 DM_D1 | L18 DM_D0 |
| M | M1 | M2 | M3 | M4 AVDDATA3 | M5 NET1.2V | M6 DGND | M7 DGND | M8 DGND | M9 DGND | M10 DGND | M11 DGND | M12 DGND | M13 DGND | M14 NET3.3V | M15 DM_D7 | M16 DM_D6 | M17 DM_D5 | M18 DM_D4 |
| N | N1 AVDDATA2 | N2 AVDDATA1 | N3 AVDDATA0 | N4 AVIDATA3 | N5 NET1.2V | N6 DGND | N7 DGND | N8 DGND | N9 DGND | N10 DGND | N11 DGND | N12 DGND | N13 DGND | N14 NET3.3V | N15 DM_D11 | N16 DM_D10 | N17 DM_D9 | N18 DM_D8 |
| P | P1 AVIDATA2 | P2 AVIDATA1 | P3 AVIDATA0 | P4 | P5 | P6 NET3.3V | P7 NET3.3V | P8 NET1.2V | P9 NET1.2V | P10 NET3.3V | P11 NET3.3V | P12 NET1.2V | P13 NET1.2V | P14 | P15 FD0 | P16 FD1 | P17 DM_D13 | P18 DM_D12 |
| R | R1 AV2CLK | R2 AV2CTRL1 | R3 AV2DATA2 | R4 PHY_RST | R5 | R6 | R7 | R8 | R9 | R10 VPP | R11 MIITXEN | R12 | R13 MIIRXER | R14 MIICRS | R15 FD2 | R16 FD3 | R17 FD4 | R18 DM_D14 |
| T | T1 AV2CTRL0 | T2 AV2DATA1 | T3 AV3CTRL1 | T4 | T5 | T6 | T7 | T8 | T9 | T10 | T11 | T12 MIIRXCLK | T13 MIICOL | T14 MIIRXDV | T15 FD5 | T16 FD6 | T17 FD7 | T18 DM_D15 |
| U | U1 AV2DATA0 | U2 AV3CTRL0 | U3 .860SPDIF | U4 | U5 | U6 | U7 | U8 | U9 | U10 | U11 MIITXD2 | U12 | U13 MIIRXD2 | U14 MIIMDIO | U15 NFCE0 | U16 FCLE | U17 NFWE | U18 NFRB |
| V | V1 | V2 | V3 | V4 | V5 | V6 | V7 | V8 | V9 | V10 | V11 MIITXD3 | V12 | V13 MIIRXD3 | V14 MIIMDC | V15 MIIPHYCLK | V16 NFWP | V17 NFRE | V18 FALE |

MIITXD2
MIITXD3
MIITXEN
R2615 33
R2616 33
R2617 33

MIICRS
MIICOL
MIIMDC
MIIMDIO
MIIPHYCLK
R2620 33

SDRAM

DM_A18/DQM
DM_A16/BA1
DM_A15/BA0
DM_A12
DM_A14/CAS
DM_A13/RAS
DM_A17/DQM

R2709 33*4(4R)
R2710 33*4(4R)
R2711 33*4(4R)
R2712 33*4(4R)
R2713 33*4(4R)

DM_A0
DM_A1
DM_A2
DM_A3
DM_A4
DM_A5
DM_A6
DM_A7
DM_A8
DM_A9
DM_A10
DM_A11

SDRAM (32MB)
U2604 A3V56S30FTP-G6

R2714 33*4(4R)
R2715 33*4(4R)

DM_D0
DM_D1
DM_D2
DM_D3
DM_D4
DM_D5
DM_D6
DM_D7
DM_D8
DM_D9
DM_D10
DM_D11
DM_D12
DM_D13
DM_D14
DM_D15

SDRAM (32MB)
U2605 A3V56S30FTP-G6

R2716 33*4(4R)
R2718 33*4(4R)

NCE
NCS2
NWE
MEMCKE
MEMCLK
NCS0
NCS1
NWAIT

R2636 OPEN
R2643 33
R2644 33
R2641 33
R2642 33
R2646 33
R2637 4K7*4(4R)
R2779 4K7*4(4R)
C2651 OPEN
R2648 OPEN
R2649 OPEN

NAND

FD0
FD1
FD2
FD3
FD4
FD5
FD6
FD7
FALE
FCLE
NFCE0
NFRB
NFRE
NFWE
NFWP

NAND FLASH (1G)
U2603 H27U1G8F2BTR

R2615 4K7
R2616 4K7
C2678 100N-K

USB
DAC

AVDCTRL
AVDDAT0
AVDDAT1
AVDDAT2
AVDDAT3
AVDCLK
USBDP
USBDM
USBVBUS
USBVBUSDRV
USBRBIAS
USBVDD
DAC_CLK
DAC_SDA
DAC_SCL
DAC_RST
DAC_VCOM
DAC_VREF
DAC_VDD
DAC_VSS

R2617 33
R2618 33
R2619 33
R2620 33
R2621 33
R2622 4K7
R2623 10
R2624 10
R2625 10
R2626 10
R2627 10
R2628 10
R2629 10
R2630 10
R2631 10
R2632 10
R2633 10
R2634 10
R2635 10
R2636 10
R2637 10
R2638 10
R2639 10
R2640 10
R2641 10
R2642 10

OPTION TABLE

| | E400E3 | X2000E3 | X2000E2/E1C/K | OTHER AVR U1B/N1B/K |
|---|---|---|---|---|
| R2213 | 0 Ω | 0Ω | 0Ω | X |
| R2221 | 0Ω | 0Ω | X | X |
| R2203 | X | X | 33Ω | 33Ω |
| C2204 | X | X | 100N-K | 100N-K |
| R2205 R2207 | 150Ω | 150Ω | X | 150Ω |
| C2207 | 10N-K | 10N-K | X | 10N-K |
| R2211 | 470Ω | 470Ω | X | 470Ω |
| R2216 | 47KΩ | 47KΩ | X | 47KΩ |
| R2217 | 330KΩ | 330KΩ | X | 330KΩ |
| C2216 | 100N-K | 100N-K | X | 100N-K |
| C2215 | 4.7UF | 4.7UF | X | 4.7UF |
| U2204 | TC74VHCU04FT | TC74VHCU04FT | X | TC74VHCU04FT |
| R2204 R2206 | X | X | X | 150Ω |
| C2206 | X | X | X | 10N-K |
| R2210 | X | X | X | 470Ω |
| R2214 | X | X | X | 47KΩ |
| R2215 | X | X | X | 330KΩ |
| R2213 | 0Ω | 0Ω | 0Ω | X |
| R2238 | X | X | X | 33Ω |
| U2202 | OPEN | OPEN | USE | USE |
| K2201 | USE | USE | OPEN | USE |
| K2202 | OPEN | OPEN | OPEN | USE |
| R2222 R2226 | OPEN | OPEN | 0Ω | OPEN |

*FILTER COMPONENTS

| | VALUE | TYPE | TOLERANCE |
|---|---|---|---|
| R2225 | 680 Ω | METAL FILM OR CARBON0 Ω | < 5% |
| C2220 | 0.068UF | FILM OR CERAMIC (CH OR C0G) | < 5% |
| C2221 | 0.0047UF | FILM OR CERAMIC (CH OR C0G) | < 5% |

TO D5
TO NET PHY
5D

TO 4E
TO HDMI RX ADV7850
E4

TO 3E
TO HDMI RX/HDMI TX (ADV7850/ADV8003)
E3

TO 2E
TO CPU
E2

DIR/PLD

DIR1

U2203 PCM9211

U2205 5M80ZT100C5N PLD

AUDIO PLD

*FILTER COMPONENTS

COAX2 OTHER AVR

COAX1

AVR-X2000E2/E1C/K OPEN

OTHER AVR OPEN

OPT1

OPT2

AVR-X2000E2/E1C/K ONLY OTHER AVR

AVR-X2000E2/E1C/K OPEN OTHER AVR

TO DSP
E5
TO 5E

TO ADC
E6
TO 6E

TO MAIN DAC
TO DAC
E7
TO 7E

E1
TO D.SUPPLY
TO 1E

GND LINE | POWER+ LINE | POWER- LINE | ANALOG AUDIO | DIGITAL1 AUDIO | TMDS SIGNAL | VIDEO SIGNAL | COMPONENT(Y) SIGNAL

SCHEMATIC DIAGRAMS (15/24)

**HDMI UNIT (5/13)**

# DSP

TO DIR/PLD

TO E5

5E

TO CPU

TO 8E

E8

MP OPEN

U2001
ADSP21487KSWZ3B

U2002
W9864G6JH-6

U2003
MX29LV160DBTI

GND LINE

POWER+ LINE

POWER- LINE

ANALOG AUDIO

DIGITAL1 AUDIO

TMDS SIGNAL

VIDEO SIGNAL

COMPONENT(Y) SIGNAL

## SCHEMATIC DIAGRAMS (16/24)

## HDMI UNIT (6/13)

# MAIN DAC

TO CPU E9 — TO 9E

FROM DIR/PLD 6E — TO E6

FROM DM860A 8D — TO D8

FROM DIR/PLD 7E — TO E7

TO 4G

TO DIGITAL CNT

G4

U2404 PCM1690

U2401 PCM3100

U2402 NJM2845DL1-33

U2405:A OPEN

U2405:B OPEN

U2406:A NJM8080 [FL]

U2406:B NJM8080 [FR]

U2407:A NJM8080 [CEN]

U2407:B NJM8080 [SW]

U2408:A NJM8080 [SL]

U2408:B NJM8080 [SR]

U2409:A NJM8080 [SBL]

U2409:B NJM8080 [SBR]

D2401 KDS181

GND LINE

POWER+ LINE

POWER- LINE

ANALOG AUDIO

DIGITAL1 AUDIO

TMDS SIGNAL

VIDEO SIGNAL

COMPONENT(Y) SIGNAL

SCHEMATIC DIAGRAMS (17/24)

**HDMI UNIT (7/13)**

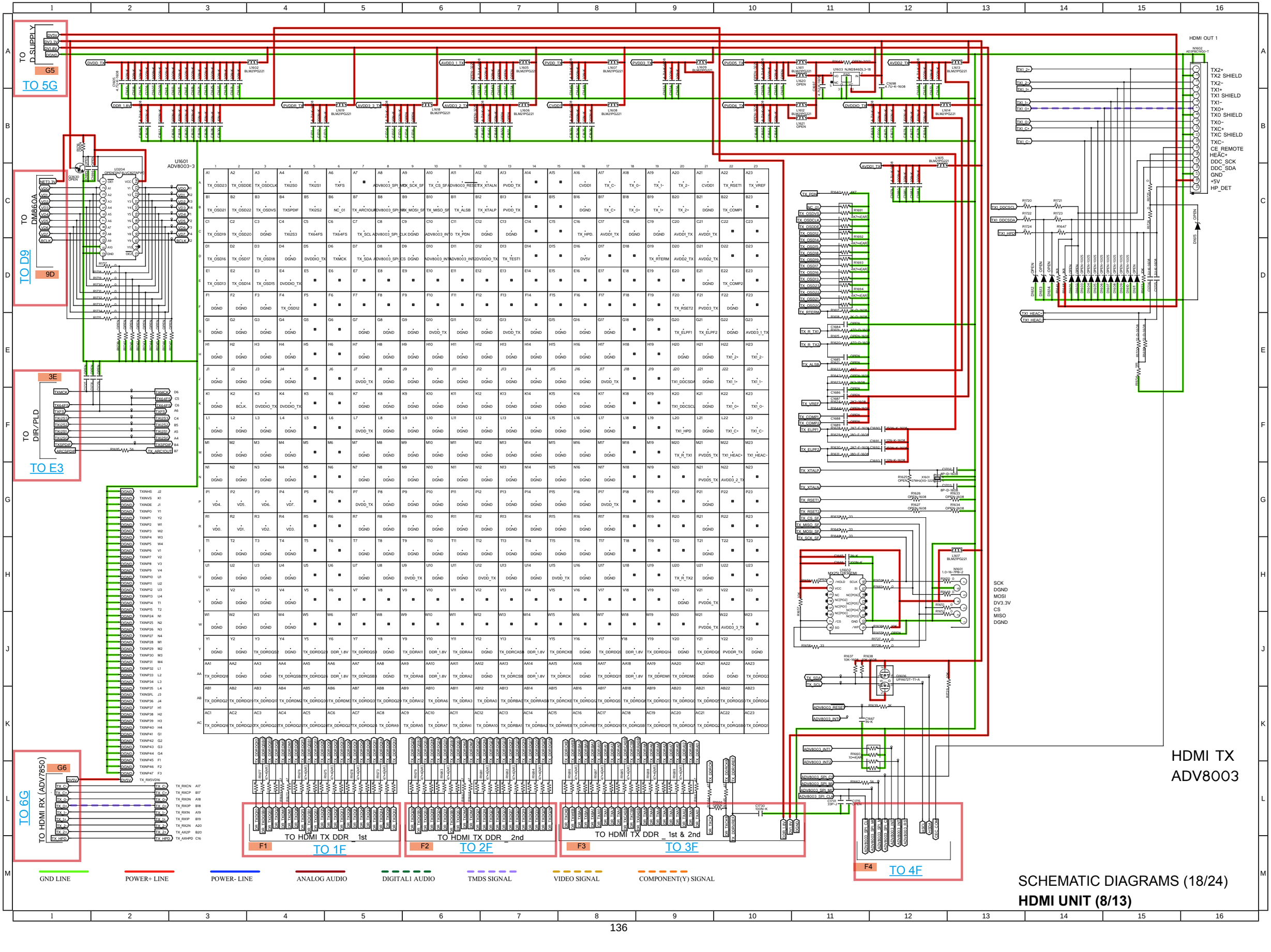
TO D.SUPPLY
TO 5G
TO D9
9D
TO DM860A
TO DIR/PLD
3E
TO E3
TO 6G
TO HDMI RX (ADV7850)
U1601
ADV8003-3
HDMI OUT 1
TX2+
TX2 SHIELD
TX2-
TX1+
TX1 SHIELD
TX1-
TX0+
TX0 SHIELD
TX0-
TXC+
TXC SHIELD
TXC-
CE_REMOTE
HEAC+
DDC_SCK
DDC_SDA
GND
+5V
HP_DET
SCK
DGND
MOSI
DV3.3V
CS
MISO
DGND
TO HDMI TX DDR _ 1st
TO 1F
TO HDMI TX DDR _ 2nd
TO 2F
TO HDMI TX DDR _ 1st & 2nd
TO 3F
TO 4F
HDMI TX
ADV8003
GND LINE
POWER+ LINE
POWER- LINE
ANALOG AUDIO
DIGITAL1 AUDIO
TMDS SIGNAL
VIDEO SIGNAL
COMPONENT(Y) SIGNAL
SCHEMATIC DIAGRAMS (18/24)
HDMI UNIT (8/13)

# HDMI TX DDR

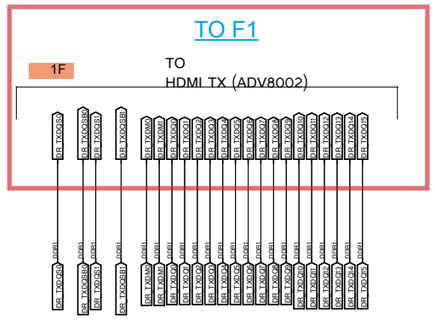


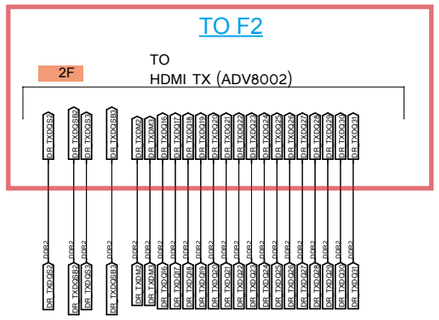


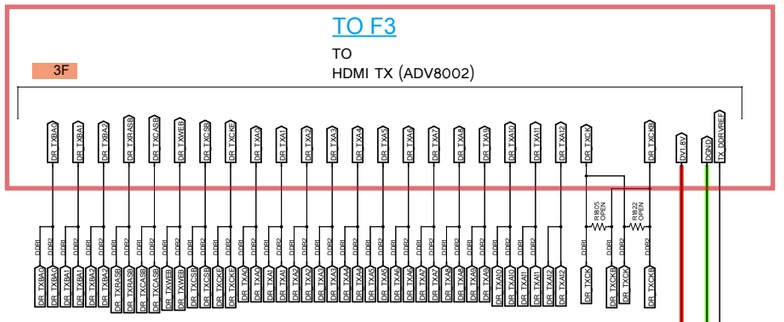


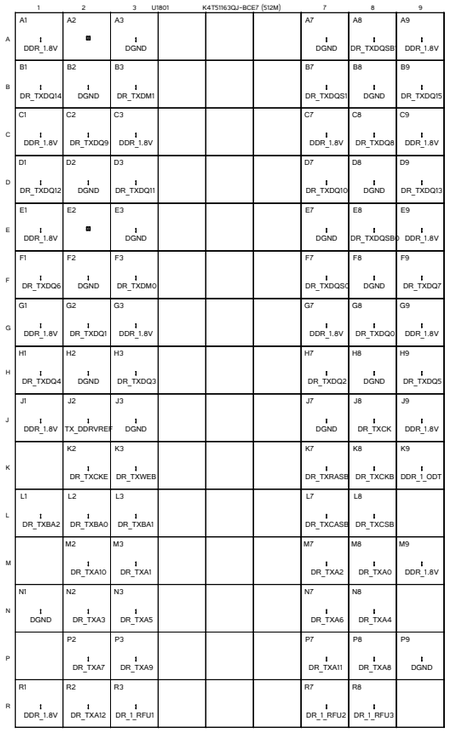


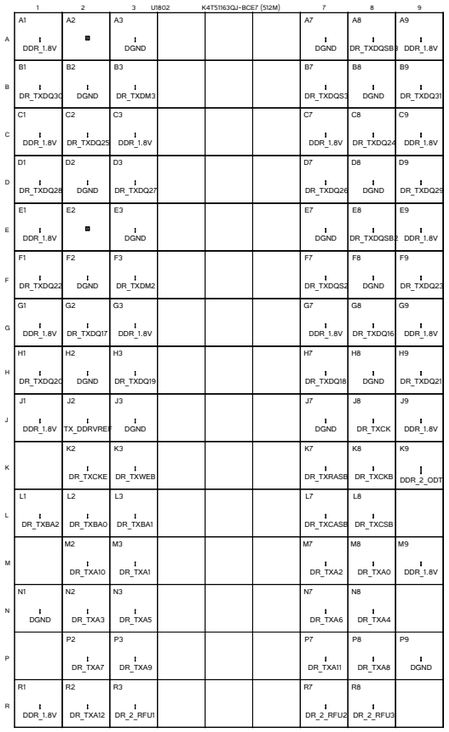


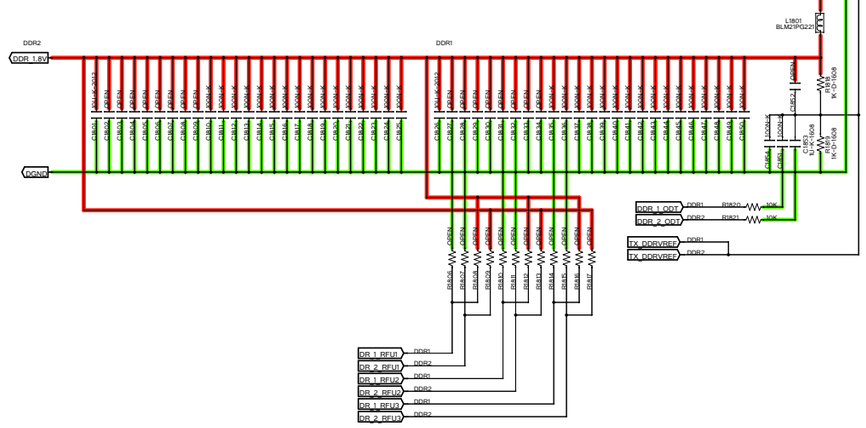


GND LINE
POWER+ LINE
POWER- LINE
ANALOG AUDIO
DIGITAL1 AUDIO
TMDS SIGNAL
VIDEO SIGNAL
COMPONENT(Y) SIGNAL

SCHEMATIC DIAGRAMS (19/24)

**HDMI UNIT (9/13)**

# CPU

TO E8 TO DSP 8E

TO E2 TO DIR/PLD 2E

TO CPU LEVEL CHG TO 6F F6

TO F4 TO HDMI TX (ADV8003) 4F

TO 7F TO HDMI RX (ADV7850) F7

TO 5F F5 — TO D.SUPPLY

9E MAIN DAC FROM TO E9

TO D6 6D — NET PHY TO

EMULATOR

REMOTE IN

REMOTE OUT

IR FLASHER

OPTION TABLE

| MODEL | R3017 | R3018 |
|---|---|---|
| AVR-E400 E3 | 18K | 3K3 |
| AVR-X2000E3 | OPEN | 0 |
| AVR-X2000E1C | 10K | 10K |
| AVR-X2000JP | 10K | 22K |
| AVR-X2000E2 | 0 | OPEN |

| MODEL | R3017 | R3018 |
|---|---|---|
| OTHER AVR_U | OPEN | 0 |
| - | 18K | 3K3 |
| OTHER AVR_K | 10K | 10K |
| - | 10K | 22K |
| OTHER AVR_N | 0 | OPEN |

GND LINE | POWER+ LINE | POWER- LINE | ANALOG AUDIO | DIGITAL1 AUDIO | TMDS SIGNAL | VIDEO SIGNAL | COMPONENT(Y) SIGNAL

SCHEMATIC DIAGRAMS (20/24)

**HDMI UNIT (10/13)**

TO 9F

F9

TO DIGITAL CNT

F8
TO 8F
FROM
D.SUPPLY

TO F6
6F

TO CPU

OPTION TABLE

| | E400E3 | X2000E3 | X2000E2/E1C/K | OTHER AVR U1B/N1B/K |
|---|---|---|---|---|
| N3201 | USE | OPEN | USE | OPEN |
| R3214 R3218 | OPEN | 0 Ω | OPEN | 0 Ω |
| C3209 | 100N-K | OPEN | 100N-K | OPEN |
| U3203 | TC74VHC08FT | OPEN | TC74VHC08FT | OPEN |

GND LINE
POWER+ LINE
POWER- LINE
ANALOG AUDIO
DIGITAL1 AUDIO
TMDS SIGNAL
VIDEO SIGNAL
COMPONENT(Y) SIGNAL

SCHEMATIC DIAGRAMS (21/24)

**HDMI UNIT (10/13)**

# DIGITAL CNT

TO 1G
TO D.SUPPLY
G1
(+28V)_DSP_(+5V)_MUTE3.3V_SWM3.3V_SWM5V_GND

TO 2G
G2
TO HDMI RX ADV7850
DGND
RECIN_C0
RECIN_C1
RECIN_Y
RECIN_V

VIDEO_F/CNT 2/2 G4
N3401 C12522-13
9B
D/MGND
VDICR
D/MGND
VDICB
D/MGND
VDIPY
D/MGND
CVBS
D/MGND
NC
D/MGND
VAUX
D/MGND
VAUXV
TO CP3401

TO G4
4G
MAIN DAC TO
DAM6GV
DAGND
DAM6GR
A/DIN_
A/DIN_
DAFL
DAFR
DAC
DASW
DASL
DASR
DASBL
DASBR
DACRTNGND

INPUT 1/1 G1
N3403 C12522-31
8A
USB_L
DAGND
USB_R
DAGND
A/D_L
DAGND
A/D_R
DAGND
DA_FL
DAGND
DA_FR
DAGND
DA_C
DAGND
DA_SW
DAGND
DA_SL
DAGND
DA_SR
DAGND
DA_SBL
DAGND
DA_SBR
RETGND
RETGND
VAUX_L
AGND
VAUX_R
MICGND
MIC_IN
VOL_MUTE
TO CP4201

VAUXL
AGND
VAUXR
MICGND
MIC
VOL_MUTE
RA+5V
RA+7V
RA-7V

C3401 OPEN
C3402 OPEN

INPUT 1/1 M1
N3406 C12522-07
TU_SCLK/SCL
TU_SDIO/SDA
TU_SEN
TU_RST/ST
TU_GPIO2_TUNED
MUTE_Z2
PRE_MUTE
5A
TO CP4203

INPUT 1/1 E1
N3407 C12522-25
DA_+5V
DA_+5V
A_-7V
A_-7V
A_+7V
A_+7V
M/DGND
M3.3V
MVOL_CLK
MVOL_DATA
TRG1
232IMO
232OMI
REMOTE3.3V
MUTE3.3V
RC_IN
FRONT_IRIN
BT_LINK
RC_OUT
KILLIR
D5V(MX)
SWM5V(MX)
ZVOL_LATCH
ZVOL_CLK
ZVOL_DATA
9A
TO CP4200

TU_SCLK/SC
TU_SDIO/SD
TU_SEN
TU_RST/ST
TU_GPIO2_INT
PRE_Z2_MUTE
PRE_MUTE

VOL_CLK
VOL_DATA
TRG_OUT
232_MO
232_MI
RC_IN/WAKE_UP
BTLINK_MO
RC_OUT
KILLIR_MO
ZVOL_LATCH
ZVOL_CLK
ZVOL_DATA

VIDEO_F/CNT 2/2 L4
N3404 C12522-13
8B
H/P_L
H/P_GND
H/P_R
RLY_F
RLY_C/S
RLY_SB
RLY_H/P
COMPONENT SW1
V IN C
V IN B
COMPONENT SW2
D/MGND
D/MGND
TO CP3404

AVR-E400/X2000 ONLY
R3401 0

N3405 2001OWS-05
4C
TR_THERMAL
RADI_THERMAL
ASO_DET
DC_DET3
DC_DET4
FROM 7CH-AMP
TO CN404

N3408 1.0-15-40PB
M3.3V
D/MGND
SWM3.3V
A+7V
A-7V
VAUXR
AGND
VAUXL
MICGND
MIC
VGND
VAUXV
H/PGND
H/PL
H/PR
FRONT_IRIN
B/PIRIN/SWM5V(MX)
POWERKEY
REDLED
FL CLK
FL DATA
FLCE1
M-DAX_LED
FLRST
GRNLED
FIL_CTRL
DIRECT_LED
MICDET
H/PDET
NC(DOORDET)
KEY1
KEY2
KEY3
ISELA
ISELB
VSELA
VSELB
D/MGND
1A
TO CN4400

FRONT FFC CONNECTOR

TO F9
TO CPU LEVEL CHG
9F

GND LINE
POWER+ LINE
POWER- LINE
ANALOG AUDIO
DIGITAL1 AUDIO
TMDS SIGNAL
VIDEO SIGNAL
COMPONENT(Y) SIGNAL

SCHEMATIC DIAGRAMS (22/24)
**HDMI UNIT (11/13)**

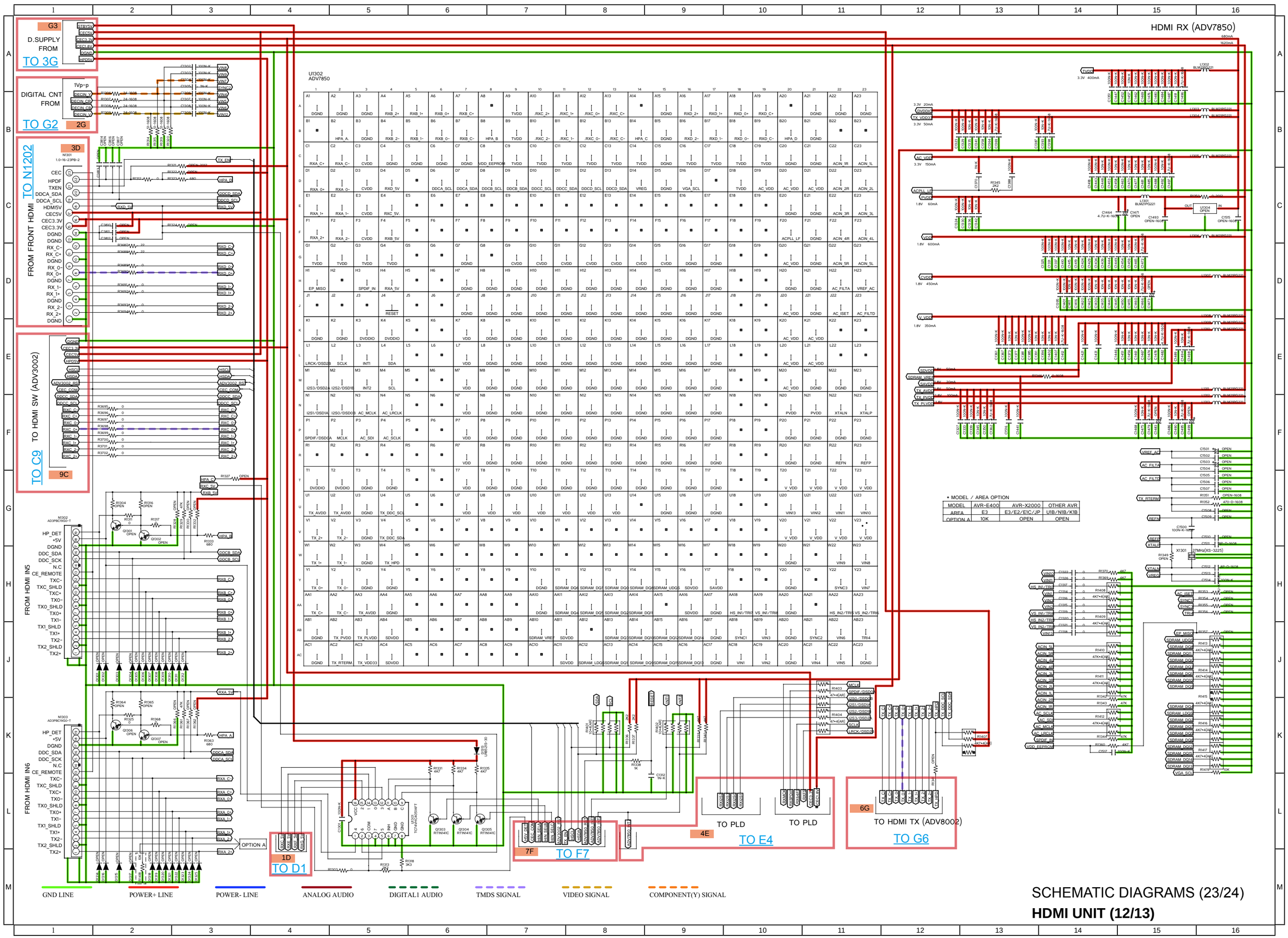
HDMI RX (ADV7850)
G3
D.SUPPLY FROM
TO 3G
DIGITAL CNT FROM
TO G2
2G
3D
FROM FRONT HDMI
TO N1202
CEC
HPDF
TXEN
DDCA_SDA
DDCA_SCL
HDMI5V
CEC5V
CEC3.3V
CEC3.3V
DGND
DGND
RX_C-
RX_C+
DGND
RX_0-
RX_0+
DGND
RX_1-
RX_1+
DGND
RX_2-
RX_2+
DGND
U1302
ADV7850
TO HDMI SW (ADV3002)
TO C9
9C
FROM HDMI IN5
FROM HDMI IN6
OPTION A
1D
TO D1
7F
TO F7
4E
TO E4
TO PLD
TO PLD
6G
TO HDMI TX (ADV8002)
TO G6
• MODEL / AREA OPTION
MODEL AVR-E400 AVR-X2000 OTHER AVR
AREA E3 E3/E2/E1C/JP U1B/N1B/K1B
OPTION A 10K OPEN OPEN
GND LINE
POWER+ LINE
POWER- LINE
ANALOG AUDIO
DIGITAL1 AUDIO
TMDS SIGNAL
VIDEO SIGNAL
COMPONENT(Y) SIGNAL
SCHEMATIC DIAGRAMS (23/24)
HDMI UNIT (12/13)

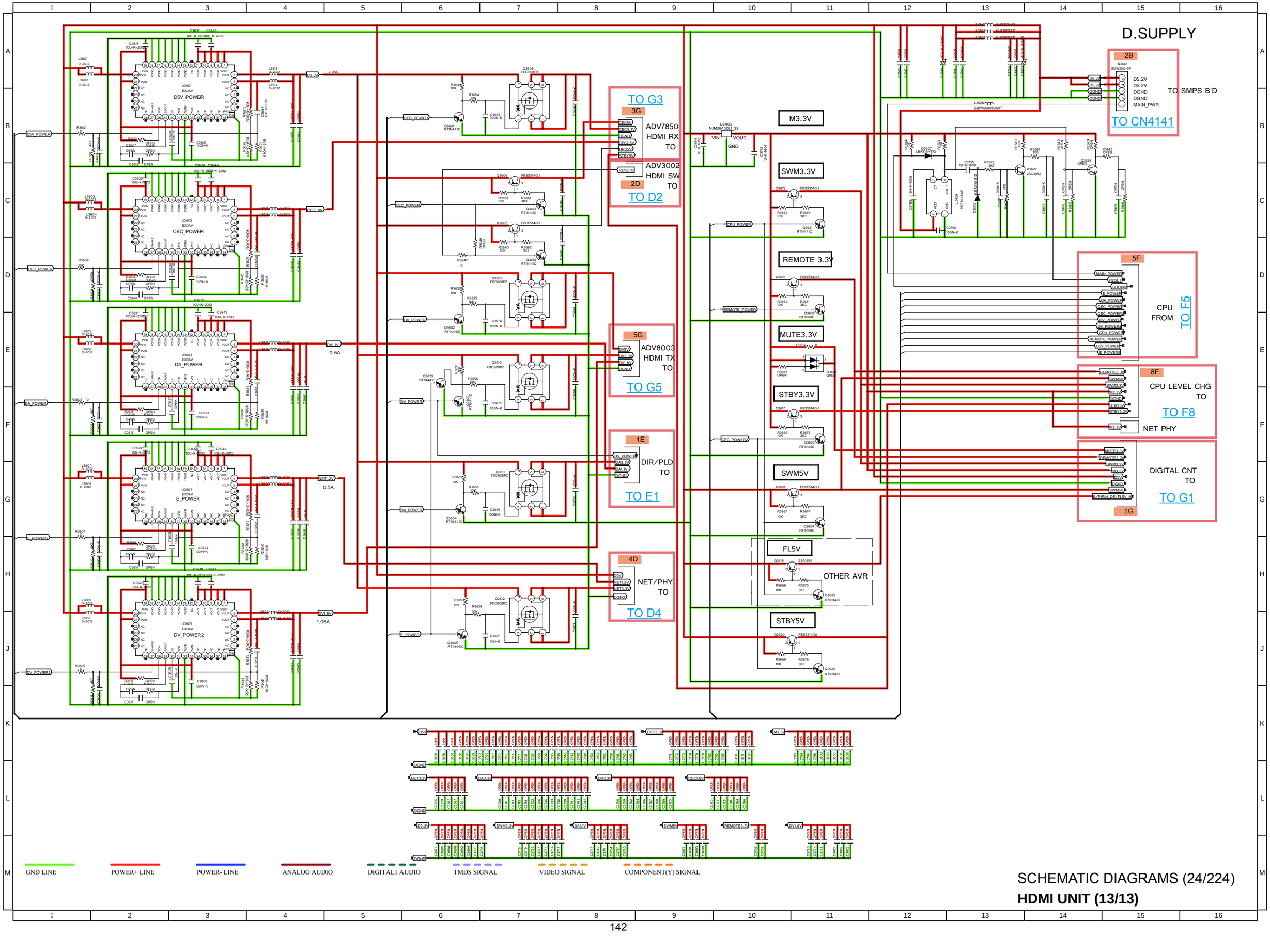


SCHEMATIC DIAGRAMS (24/224)

**HDMI UNIT (13/13)**

# EXPLODED VIEW

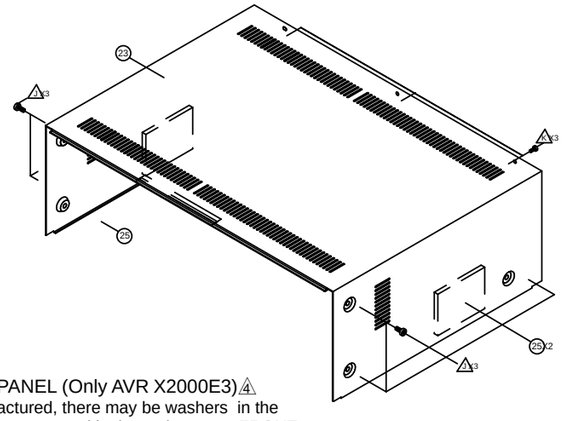


Cautions when replacing the FRONT PANEL (Only AVR X2000E3)⚠4
Depending on when the model was manufactured, there may be washers in the FRONT PANEL screw positions. Washers are not used in the replacement FRONT PANEL.If you are replacing a FRONT PANEL that has washers, discard the washers.

This caution does not apply to models that are not originally fitted with washers.

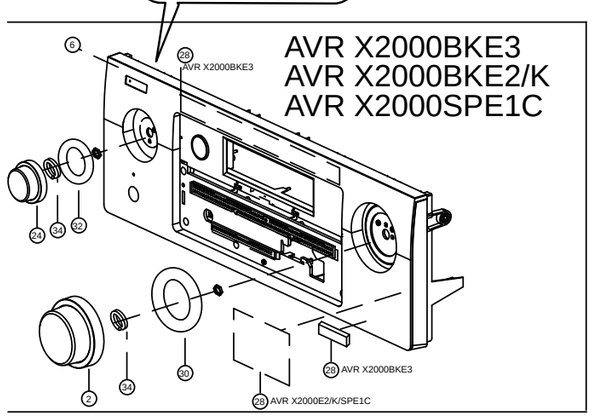


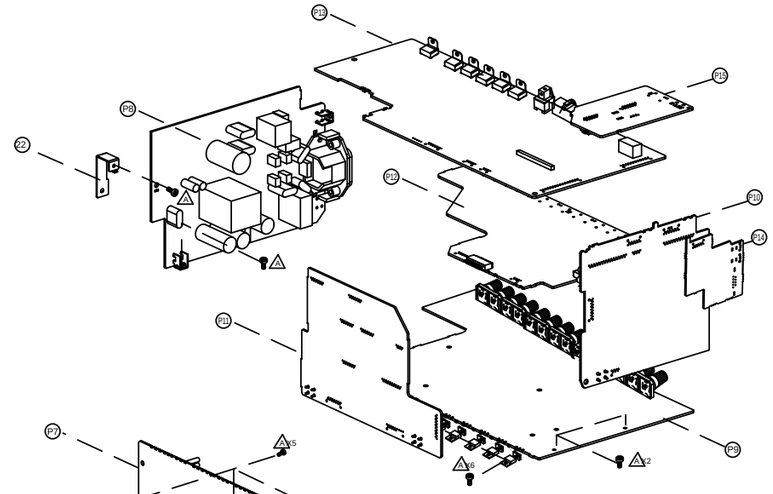


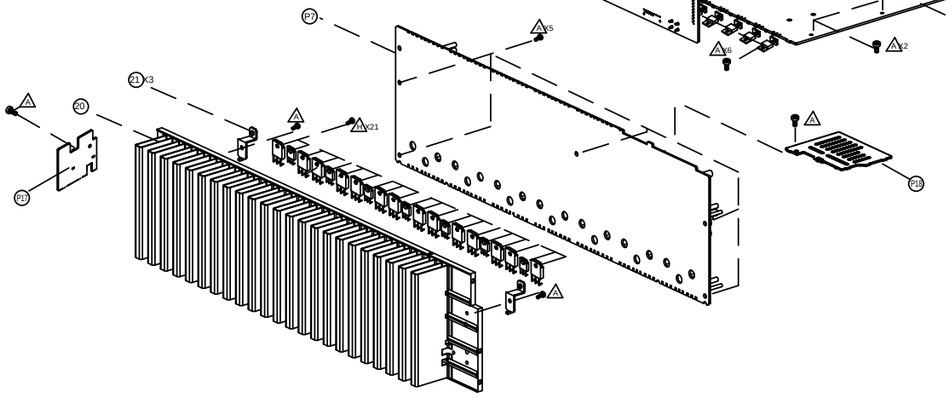


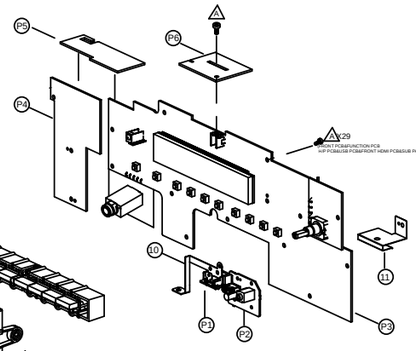


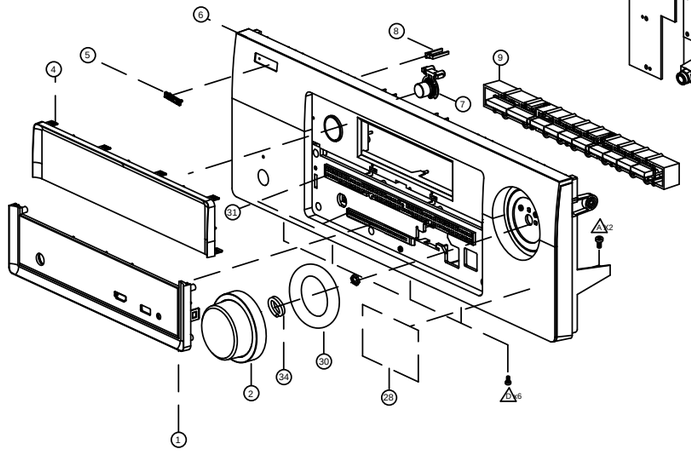


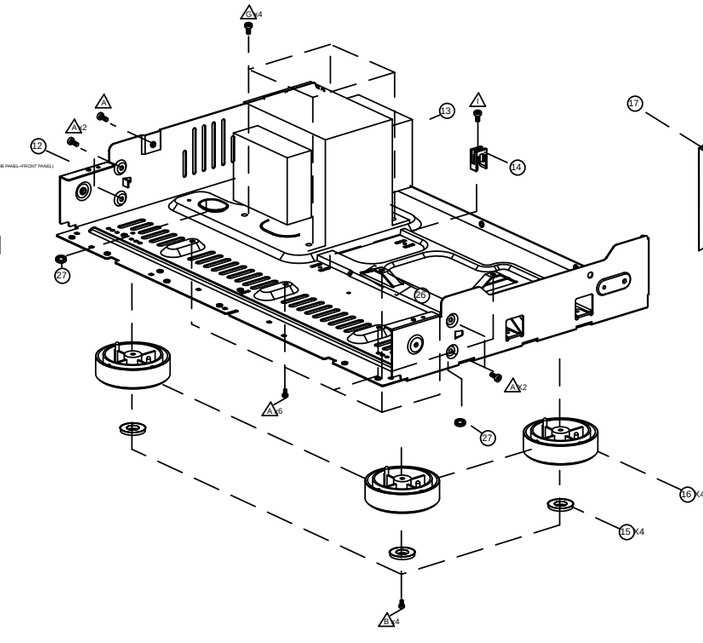


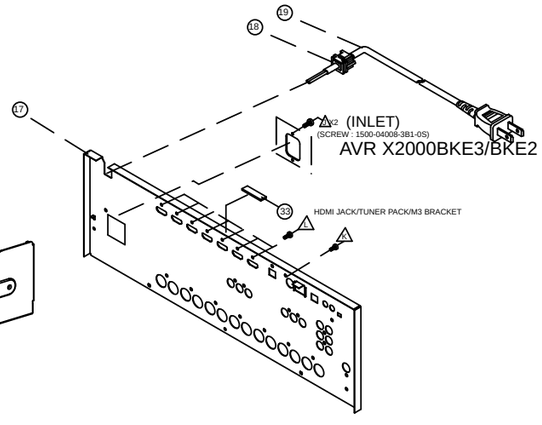


**WARNING:**
Parts marked with this symbol ⚠ have critical characteristics.
Use ONLY replacement parts recommended by the manufacturer.

Personal notes:

Personal notes:

# PARTS LIST OF EXPLODED VIEW

Please refer to the last chapter.

∗Parts for which "nsp" is indicated on this table cannot be supplied.

∗P.W.B. ASS'Y for which "nsp" is indicated on this table cannot be supplied. When repairing the P.W.B. ASS'Y, check the board parts table and order replacement parts.

∗The parts listed below are for maintenance only, might differ from the parts used in the unit in appearances or dimensions

∗Part indicated with the mark " ★ " is not illustrated in the exploded view.

**Personal notes:**

## PACKING VIEW

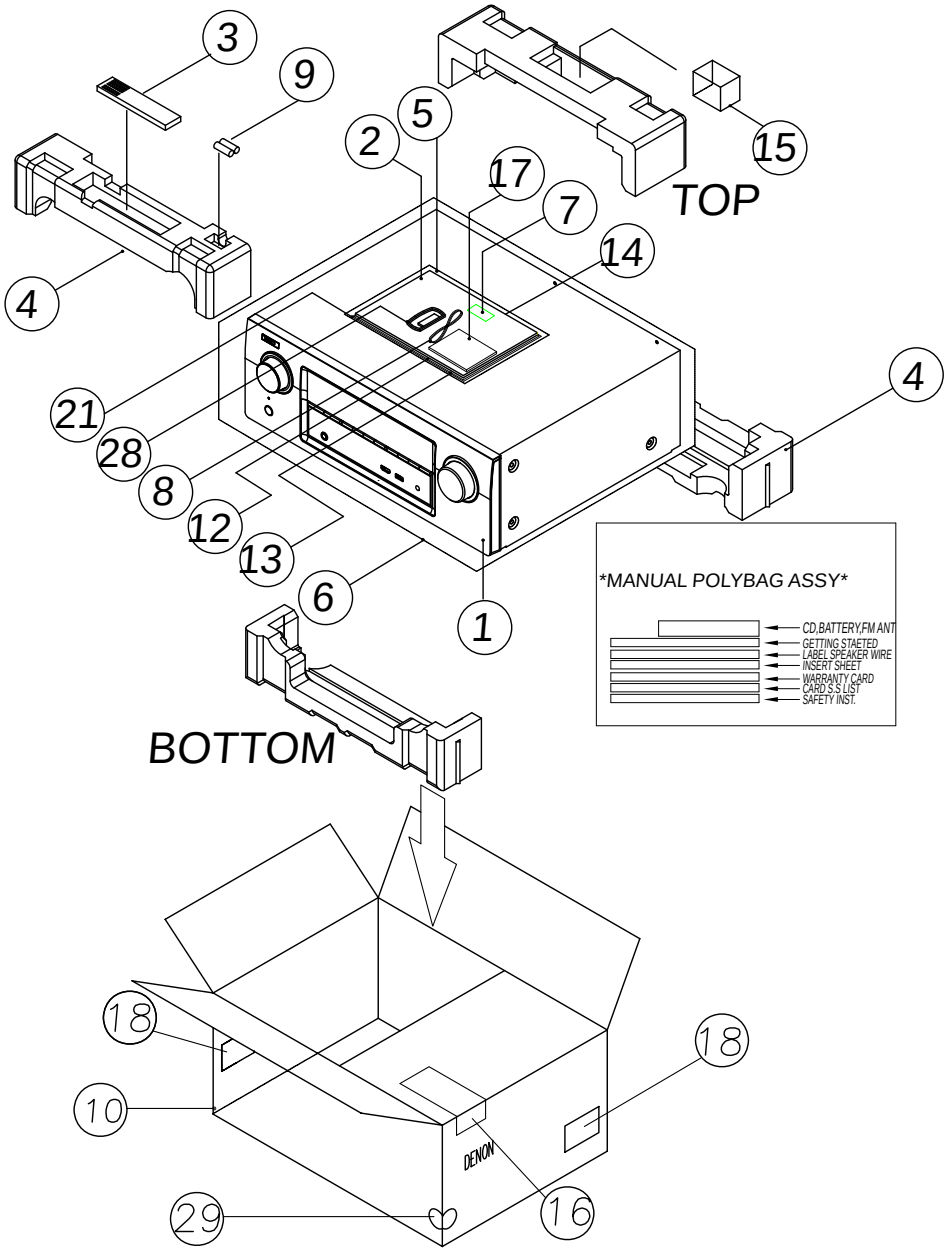


| * POLY BAG PACKING STYLE | SPEAKER TERMINAL BUSHING | * BOX BOTTOM TAPING |
|---|---|---|
| 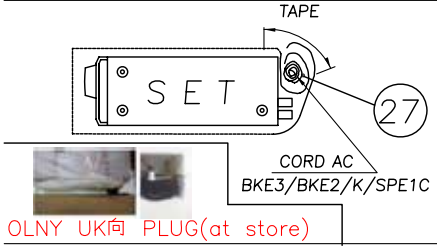 | 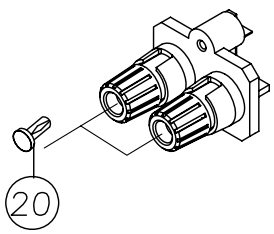 | 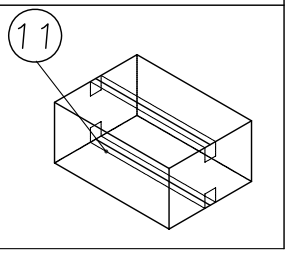 |

# PARTS LIST OF PACKING & ACCESSORIES

Please refer to the last chapter.

∗Parts for which "nsp" is indicated on this table cannot be supplied.

∗The parts listed below are for maintenance only, might differ from the parts used in the unit in appearances or dimensions.

**Personal notes:**

# SEMICONDUCTORS

Only major semiconductors are shown, general semiconductors etc. are omitted to list.
The semiconductor which described a detailed drawing in a schematic diagram are omitted to list.

## 1. IC's

### R5F56108VNFP (HDMI : U3002)

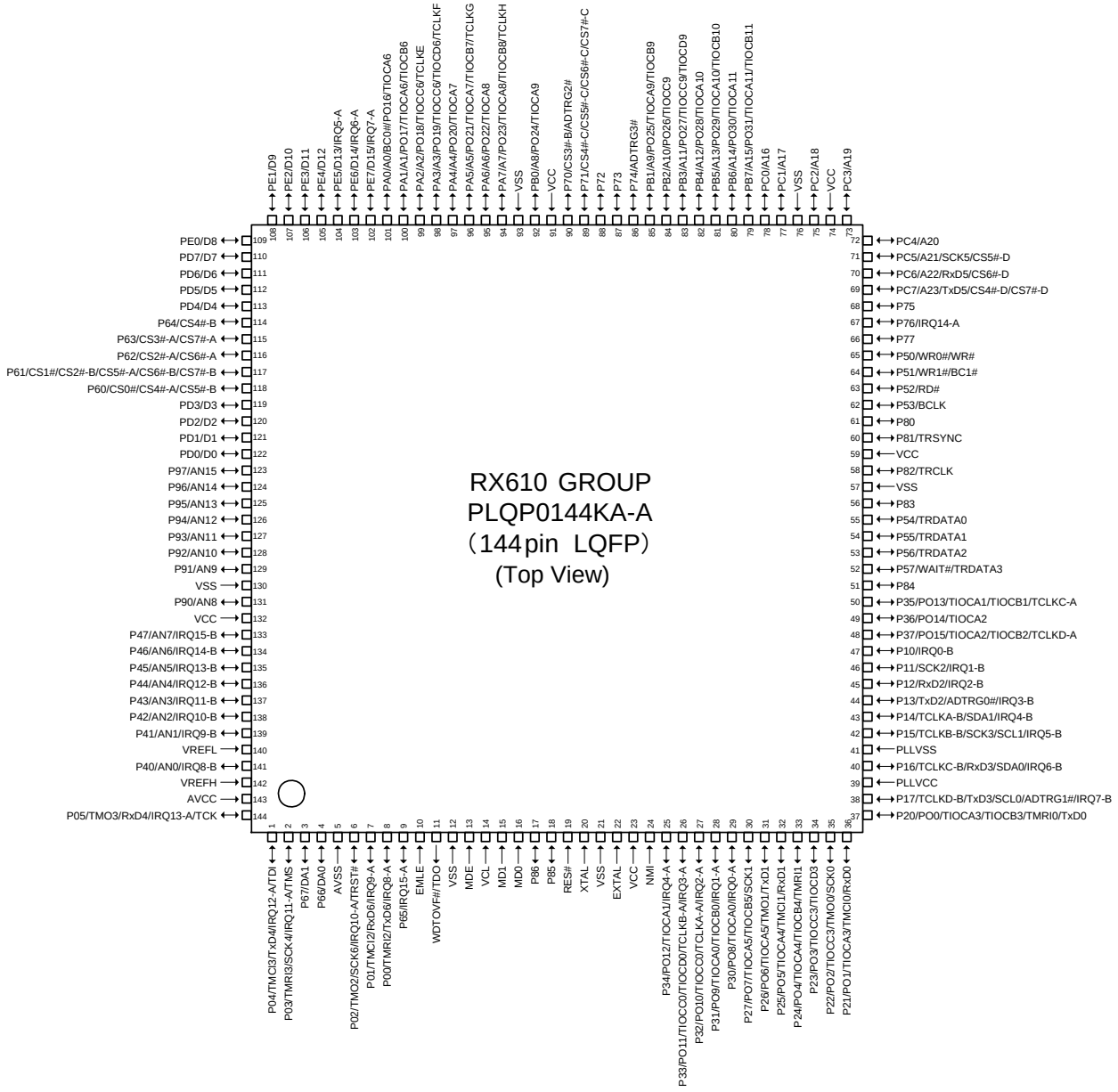


### R5F56108VNFP Terminal Functions

| Pin | Pin Name | Symbol | I/O | Pull up/ down | LvCnv | STBY | STOP | CEC STBY | Function |
|---|---|---|---|---|---|---|---|---|---|
| 1 | P04/IRQ12-A/TMCI3/ TxD4/TDI | NC | I | M3VPu | - | I | I | I | Unused |
| 2 | P03/IRQ11-A/TMRI3/ SCK4/TMS | NC | I | M3VPu | - | I | I | I | Unused |
| 3 | P67/DA1 | HIN SELA | O | - | - | L | L | - | TC74VHC4051AFT control pin. (Control the detection of HDMI 5V INPUT for CEC STANDBY. ) |
| 4 | P66/DA0 | HIN SELB | O | - | - | L | L | - | TC74VHC4051AFT control pin. (Control the detection of HDMI 5V INPUT for CEC STANDBY. ) |
| 5 | AVSS | AVSS | - | - | - | - | - | - | GND |
| 6 | P02/IRQ10-A/TMO2/ SCK6/TRST# | NC | I | Pd | - | I | I | I | Unused |

| Pin | Pin Name | Symbol | I/O | Pull up/ down | LvCnv | STBY | STOP | CEC STBY | Function |
|---|---|---|---|---|---|---|---|---|---|
| 7 | P01/IRQ9-A/TMCI2/ RxD6 | RXD MI232O | I | M3VPu | - | I | I | I | Data received from the external pin(AMX)/Use for firmware upgrading by DFW. |
| 8 | P00/IRQ8-A/TMRI2/ TxD6 | TXD MO232I | O | - | - | L | L | L | Data transfer to external pin(AMX)/Use for firmware upgrading by DFW. |
| 9 | P65/IRQ15-A | POWER KEY | I | M3VPu | - | I | I | I | POWER KEY (Waiting Mode cancel, interrupt port) |
| 10 | EMLE | NC | I | Pd | - | - | - | - | Unused |
| 11 | WDTOVF#/TDO | NC | O/O | - | - | - | - | - | Unused |
| 12 | VSS | VSS | I | - | - | - | - | - | GND |
| 13 | MDE | MDE | I | Pd | - | - | - | - | Unused |
| 14 | VCL | VCL | I | - | - | - | - | - | Smoothing capacitor connection pin |
| 15 | MD1 | MD1 | I | M3VPu | - | - | - | - | Unused |
| 16 | MD0 | MD0 | I | M3VPu | - | - | - | - | Unused |
| 17 | P86 | CEC POWER2 | O | - | - | L | L | H | CEC STANDBY POWER SUPPLY control pin (CEC STANDBY MODE=3) |
| 18 | P85 | REMOTE POWER(232C) (X2000E3 Only) | O | - | - | L | L | L | 232C POWER SUPPLY (REMOTE 3.3V) control pin.(ON: H) |
| 19 | RES# | RESET | I | - | - | - | - | - | Reset input (reset: L) |
| 20 | XTAL | XTAL | I | - | - | - | - | - | Clock input |
| 21 | VSS | VSS | - | - | - | - | - | - | GND |
| 22 | EXTAL | EXTAL | - | - | - | - | - | - | Clock output |
| 23 | VCC | VCC | - | - | - | - | - | - | +3.3V |
| 24 | NMI | NMI | I | M3VPu | - | - | - | - | Unused |
| 25 | P34/IRQ4-A/PO12/ TIOCA1 | BDOWN | I | - | - | I | I | I | Power failure detection pin(Power failure:L) |
| 26 | P33/IRQ3-A/PO11/ TIOCC0/TIOCD0/ TCLKB-A | DAC.PLD ERR | I | - | - | L | L | L | DAC.PLD ERROR detection pin |
| 27 | P32/IRQ2-A/PO10/ TIOCC0/TCLKA-A | NC | O | - | - | L | O | L | Unused |
| 28 | P31/IRQ1-A/PO9/ TIOCA0/TIOCB0 | ADV8003 INT1 | I | - | - | I | I | I | HDMI transmitter / OSD ADV8003 INT1 output pin |
| 29 | P30/IRQ0-A/PO8/ TIOCA0 | RC IN | I | - | - | I | I | I | Remote control signal input pin |
| 30 | P27/PO7/TIOCA5/ TIOCB5/SCK1 | DAC MUTE | O | - | - | L | L | L | DAC MUTE control pin (PCM1690) |
| 31 | P26/PO6/TIOCA5/ TMO1/TxD1 | NC | O | - | - | L | L | L | Unused |
| 32 | P25/PO5/TIOCA4/ TMCI1/RxD1 | NC | O | - | - | L | L | L | Unused |
| 33 | P24/PO4/TIOCA4/ TIOCB4/TMRI1 | TU RST | O | SW3VPu | - | L | L | L | TUNER RESET pin |
| 34 | P23/PO3/TIOCC3/ TIOCD3 | E RESET | O | N3VPu | - | L | L | L | ETHERNET RESET control pin (DM860) |
| 35 | P22/PO2/TIOCC3/ TMO0/SCK0 | E POWER | O | - | - | L | L | L | ETHERNET POWER SUPPLY (NET3.3V) control pin (ON:H) |
| 36 | P21/PO1/TIOCA3/ TMCI0/RxD0 | E_RXDMIEO | I | N3VPu | - | I | I | I | ETHERNET communication control pin (DM860) |
| 37 | P20/PO0/TIOCA3/ TIOCB3/TMRI0/TxD0 | E_TXDMOEI | O | N3VPu | - | L | L | L | ETHERNET communication control pin (DM860) |
| 38 | P17/IRQ7-B/ TCLKD-B/TxD3/ SCL0/ADTRG1# | TU SCLK | O | - | - | L | L | L | TUNER control pin |
| 39 | PLLVCC | PLLVCC | - | - | - | - | - | - | +3.3V |
| 40 | P16/IRQ6-B/ TCLKC-B/RxD3/ SDA0 | TU SDIO | I_O | - | - | L | L | L | TUNER control pin |
| 41 | PLLVSS | PLLVSS | - | - | - | - | - | - | GND |
| 42 | P15/IRQ5-B/ TCLKB-B/SCK3/ SCL1 | HSCL (400k) | O | CEC3VPu | - | L | L | L | VIDEO I2C Control for - HDMI SW (ADV3002) / HDMI RX , A to H Decoder (ADV7850) / HDMI ip Scaler , TX (ADV8003) |
| 43 | P14/IRQ4-B/ TCLKA-B/SDA1 | HSDA (400k) | I_O | CEC3VPu | - | L | L | L | VIDEO I2C Control for - HDMI SW (ADV3002) / HDMI RX , A to H Decoder (ADV7850) / HDMI ip Scaler , TX (ADV8003) |

| Pin | Pin Name | Symbol | I/O | Pull up/ down | LvCnv | STBY | STOP | CEC STBY | Function |
|---|---|---|---|---|---|---|---|---|---|
| 44 | P13/IRQ3-B/TxD2/ ADTRG0# | ADV8003 SPI MO | O | - | - | L | L | L | OSD control pin |
| 45 | P12/IRQ2-B/RxD2 | ADV8003 SPI MI | I | - | - | L | L | L | OSD control pin |
| 46 | P11/IRQ1-B/SCK2 | ADV8003 SPI CLK | O | - | - | L | L | L | OSD control pin |
| 47 | P10/IRQ0-B | ADV8003 SPI CS | O | - | - | L | L | L | OSD control pin |
| 48 | P37/PO15/TIOCA2/ TIOCB2/TCLKD-A | EEPROM SDA | I_O | M3VPu | - | I | I | I | EEPROM control pin |
| 49 | P36/PO14/TIOCA2 | EEPROM SCL | O | M3VPu | - | I | I | I | EEPROM control pin |
| 50 | P35/PO13/TIOCA1/ TIOCB1/TCLKC-A | ADV7850 RST | O | - | - | L | L | L | HDMI RX , A to H Decoder (ADV7850) RESET control pin |
| 51 | P84 | CEC_OUT | O | - | - | L | L | - | CEC-D signal output pin |
| 52 | P57/WAIT#/ TRDATA3 | ADV3002 RST | O | SW3VPu | - | L | L | L | HDMI switcher RESET control pin (ADV3002) |
| 53 | P56/TRDATA2 | E SPI MOEI | O | N3VPu | - | L | L | L | ETHERNET communication control pin (DM860) |
| 54 | P55/TRDATA1 | ADV8003 RST | O | SW3VPu | - | L | L | L | HDMI Tx/ip Scaler/OSD RESET control pin (ADV8003) |
| 55 | P54/TRDATA0 | E SPI MIEO | I | N3VPu | - | I | L | I | ETHERNET communication control pin (DM860) |
| 56 | P83 | E SPI CLK | O | N3VPu | - | L | L | L | ETHERNET communication control pin (DM860) |
| 57 | VSS | VSS | - | - | - | - | - | - | GND |
| 58 | P82/TRCLK | FL CE | O | - | - | L | L | L | VFD control pin |
| 59 | VCC | VCC | - | - | - | - | - | - | +3.3V |
| 60 | P81/TRSYNC | FL RST | O | - | - | L | L | L | VFD control pin |
| 61 | P80 | VIN C | O | - | 3->5 | L | L | L | A-VIDEO (CVBS) switcher control pin (MM74HC4051MX) |
| 62 | BCLK/P53 | NC | I | - | - | I | I | I | Unused |
| 63 | P52/RD# | COMP SW1 | O | - | 3->5 | L | L | L | A-VIDEO (COMPONENT) switcher control pin (NJM2586) |
| 64 | P51/WR1#/BC1# | ZVOL CLK | O | - | - | L | L | L | ZONE VOLUME control pin (AVR-X2000 Only) |
| 65 | P50/WR0#/WR# | ZVOL DATA | O | - | - | L | L | L | ZONE VOLUME control pin (AVR-X2000 Only) |
| 66 | P77 | VIN B | O | - | 3->5 | L | L | L | A-VIDEO (CVBS) switcher control pin (MM74HC4051MX) |
| 67 | P76/IRQ14-A | TU GPO2_INT | I | - | - | L | L | L | TUNER GPIO2 input pin |
| 68 | P75 | DSP ROMRST | O | - | - | I | I | I | Memory reset for DSP (Reset : L) |
| 69 | PC7/A23/CS4#-D/ CS7#-D/TxD5 | DSP MOSI | O | DA3VPu | - | L | L | L | DSP control pin (ADSP21487KSWZ-3B) |
| 70 | PC6/A22/CS6#-D/ RxD5 | DSP MISO | I | DA3VPu | - | L | L | L | DSP control pin (ADSP21487KSWZ-3B) |
| 71 | PC5/A21/CS5#-D/ SCK5 | DSPI CLK | O | DA3VPu | - | L | L | L | DSP control pin (ADSP21487KSWZ-3B) |
| 72 | PC4/A20 | DSP RST | O | - | - | L | L | L | DSP(ADSP21487KSWZ-3B) reset output pin (Reset : L) |
| 73 | PC3/A19 | DSP FLAG0 | I | Pd | - | L | L | L | DSP control pin (ADSP21487KSWZ-3B) |
| 74 | VCC | VCC | - | - | - | - | - | - | +3.3V |
| 75 | PC2/A18 | DSP ICS | O | DA3VPu | - | L | L | L | DSP control pin (ADSP21487KSWZ-3B) |
| 76 | VSS | VSS | - | - | - | - | - | - | GND |
| 77 | PC1/A17 | GRN LED | O | - | - | L | L | L | POWER LED control pin(ON:H) |
| 78 | PC0/A16 | RED LED | O | - | - | L | L | H | POWER/STANDBY LED control pin (ON:H) |
| 79 | PB7/A15/PO31/ TIOCA11/TIOCB11 | H/P RL | O | - | - | L | L | L | HEADPHONE RLY control pin |
| 80 | PB6/A14/PO30/ TIOCA11 | FRONT RL | O | - | - | L | L | L | SPEAKER RELAY control pin |
| 81 | PB5/A13/PO29/ TIOCA10/TIOCB10 | HIN SELC | O | - | - | L | L | - | TC74VHC4051AFT control pin. (Control the detection of HDMI 5V INPUT for CEC STANDBY. ) |
| 82 | PB4/A12/PO28/ TIOCA10 | TU_SEN | O | - | - | L | L | L | TUNER control pin |
| 83 | PB3/A11/PO27/ TIOCC9/TIOCD9 | C/S RL | O | - | - | L | L | L | CENTER/SURROUND Ch RELAY control pin |
| 84 | PB2/A10/PO26/ TIOCC9 | SB RL | O | - | - | L | L | L | SURROUND-BACK Ch RELAY control pin |

| Pin | Pin Name | Symbol | I/O | Pull up/ down | LvCnv | STBY | STOP | CEC STBY | Function |
|---|---|---|---|---|---|---|---|---|---|
| 85 | PB1/A9/PO25/ TIOCA9/TIOCB9 | D5V POWER | O | - | - | L | L | H | DIGITAL POWER SUPPLY (D5V) control pin (ON:H) |
| 86 | P74/ADTRG3# | DIR CE | O | - | - | L | L | L | DIR control pin (PCM9211) |
| 87 | P73 | DIR DIN | O | - | - | L | L | L | DIR control pin (PCM9211) |
| 88 | P72 | DIR DOUT | I | DA3VPu | - | I | I | I | DIR control pin (PCM9211) |
| 89 | P71/CS4#-C/ CS5#-C/CS6#-C/ CS7#-C | DIR CLK | O | - | - | L | L | L | DIR control pin (PCM9211) |
| 90 | P70/CS3#-B/ ADTRG2# | DIR RST | O | - | - | L | L | L | DIR RESET pin (PCM9211) |
| 91 | VCC | VCC | - | - | - | - | - | - | +3.3V |
| 92 | PB0/A8/PO24/ TIOCA9 | COMP SW2 | O | - | 3->5 | L | L | L | A-VIDEO (COMPONENT) switcher control pin (NJM2586) |
| 93 | VSS | VSS | - | - | - | - | - | - | GND |
| 94 | PA7/A7/PO23/ TIOCA8/TIOCB8/ TCLKH | NC | O/O | - | - | L | L | L | Unused |
| 95 | PA6/A6/PO22/ TIOCA8 | VSEL A | I | - | - | I | I | I | Master Volume rotation detection pin(Rotary encoder) |
| 96 | PA5/A5/PO21/ TIOCA7/TIOCB7/ TCLKG | VSEL B | I | - | - | I | I | I | Master Volume rotation detection pin(Rotary encoder) |
| 97 | PA4/A4/PO20/ TIOCA7 | NC | O | - | - | L | L | L | Unused |
| 98 | PA3/A3/PO19/ TIOCC6/TIOCD6/ TCLKF | DAC(ETHER) MUTE | O | - | - | L | L | L | DAC (ETHER) MUTE control pin (PCM5100 for DM860) |
| 99 | PA2/A2/PO18/ TIOCC6/TCLKE | PRE Z2 MUTE | O | - | - | L | L | L | Z2 PRE OUT MUTE control pin (AVRX2000 Only) |
| 100 | PA1/A1/PO17/ TIOCA6/TIOCB6 | CLK MUTE | O | - | - | L | L | L | A.PLD MUTE control pin |
| 101 | PA0/A0/BC0#/PO16/ TIOCA6 | PRE MUTE | O | - | - | L | L | L | Sub Woofer PRE OUT MUTE control pin |
| 102 | PE7/IRQ7-A/D15 | ADV8003 INT2 | I | - | - | I | I | I | HDMI TX INT2 input pin (ADV8003) |
| 103 | PE6/IRQ6-A/D14 | ADV7850 INT1 | I | - | - | I | I | I | HDMI RX INT1 input pin (ADV7850) |
| 104 | PE5/IRQ5-A/D13 | ADV7850 INT2 | I | - | - | L | L | L | HDMI RX INT2 input pin (ADV7850) |
| 105 | PE4/D12 | ISEL A(AVRX2000)/ NC(AVRE400) | I/O | - | - | I/L | I/L | I/L | Input Selector rotation detection pin(Rotary encoder) / Unused (AVRE400) |
| 106 | PE3/D11 | ISEL B(AVRX2000)/ NC(AVRE400) | I/O | - | - | I/L | I/L | I/L | Input Selector rotation detection pin(Rotary encoder) / Unused (AVRE400) |
| 107 | PE2/D10 | VOL CLK | O | - | - | L | L | L | FUNCTION / VOLUME control pin (R2A15218) |
| 108 | PE1/D9 | VOL DATA | O | - | - | L | L | L | FUNCTION / VOLUME control pin (R2A15218) |
| 109 | PE0/D8 | PLD WRITE | O | - | - | L | L | L | A.PLD /JTAG switching control pin |
| 110 | PD7/D7 | JTAG TDO | I | - | - | L | L | L | A.PLD rewriting control pin (JTAG) |
| 111 | PD6/D6 | JTAG TMS/APLD CS | O/O | - | - | L | L | L | A.PLD rewriting & control pin |
| 112 | PD5/D5 | JTAG TDI/APLD DATA/DAC DATA | O/O | - | - | L | L | L | A.PLD rewriting & control /DAC control pin |
| 113 | PD4/D4 | JTAG TCK/APLD CLK/DAC CLK | O/O | - | - | L | L | L | A.PLD rewriting & control /DAC control pin |
| 114 | P64/CS4#-B | ZVOL LATCH | O | - | - | L | L | L | ZONE VOLUME control pin (AVR-X2000 Only) |
| 115 | P63/CS3#-A/CS7#-A | NC | O | - | - | L | L | L | Unused |
| 116 | P62/CS2#-A/CS6#-A | E SPI CS | O | N3VPu | - | L | L | L | ETHERNET communication control pin(DM860) |
| 117 | P61/CS1#/CS2#-B/ CS5#-A/CS6#-B/ CS7#-B | DAC MS | O | - | - | L | L | L | D/A converter control pin(PCM1690) |
| 118 | P60/CS0#/CS4#-A/ CS5#-B | DAC RST | O | - | - | L | L | L | D/A converter control pin(PCM1690) |
| 119 | PD3/D3 | NC | O | - | - | L | L | L | Unused |
| 120 | PD2/D2 | NC | O | - | - | L | L | L | Unused |
| 121 | PD1/D1 | FL CLK | O | - | - | L | L | L | VFD control pin |
| 122 | PD0/D0 | FL DATA | O | - | - | L | L | L | VFD control pin |

| Pin | Pin Name | Symbol | I/O | Pull up/ down | LvCnv | STBY | STOP | CEC STBY | Function |
|---|---|---|---|---|---|---|---|---|---|
| 123 | P97/AN15 | DA POWER | O | - | - | L | L | L | DIGITAL AUDIO POWER SUPPLY (DA3.3V & DA1.2V) control pin.(ON:H) |
| 124 | P96/AN14 | CEC POWER | O | - | - | L | L | ※ | HDMI CEC POWER SUPPLY (CEC5V & CEC3.3V & CEC1.8V) control pin. (ON:H) ※CECANDBY:MODE1=H,MODE2=H, MODE3=L |
| 125 | P95/AN13 | DV POWER1 | O | - | - | L | L | ※ | Digital VIDEO POWER SUPPLY (DV5V & DV3.3V) control pin. ※CEC STANDBY : MODE1=H , MODE2=L , MODE3=L |
| 126 | P94/AN12 | DV POWER2 | O | - | - | L | L | ※ | Digital VIDEO POWER SUPPLY (DV1.8V) control pin. ※CEC STANDBY : MODE1=H , MODE2=L , MODE3=L |
| 127 | P93/AN11 | MAIN POWER | O | - | - | L | L | L | MAIN POWER control pin |
| 128 | P92/AN10 | CPU POWER | O | - | - | L | L | L | CPU INTERFACE POWER SUPPLY (SWM3.3V & SWM5V) control pin (POWER ON: H , CEC ON STANDBY: H) |
| 129 | P91/AN9 | Tx EN | O | - | - | L | L | L | Front HDMI INPUT (AD8195) control pin |
| 130 | VSS | VSS | - | - | - | - | - | - | GND |
| 131 | P90/AN8 | MODE | I | - | - | I | I | I | Destination detection pin |
| 132 | VCC | VCC | - | - | - | - | - | - | +3.3V |
| 133 | P47/IRQ15-B/AN7 | THERMAL B/DC DET/ASO | I | - | - | I | I | I | ASO PROTECT / DC PROTECT / HEAT PROTECT-B detection pin |
| 134 | P46/IRQ14-B/AN6 | H/P DET / MIC DET/THERMAL A | I | - | - | I | I | I | MIC detection / Headphone detection / HEAT PROTECT-A detection pin |
| 135 | P45/IRQ13-B/AN5 | KEY3 | I | SW3VPu | - | I | I | I | Button input 3 |
| 136 | P44/IRQ12-B/AN4 | KEY2 | I | SW3VPu | - | I | I | I | Button input 2 |
| 137 | P43/IRQ11-B/AN3 | KEY1 | I | SW3VPu | - | I | I | I | Button input 1 |
| 138 | P42/IRQ10-B/AN2 | E SPI REQ | I | Pd | - | I | L | I | ETHERNET communication control pin(DM860) |
| 139 | P41/IRQ9-B/AN1 | H5V DET | I | - | - | I | I | I | HDMI INPUT 5V (for EDID / HOT PLUG) detection pin |
| 140 | AVSS | AVSS | - | - | - | - | - | - | GND |
| 141 | P40/IRQ8-B/AN0 | CEC_IN | I | SW3VPu | - | I | I | I | CEC-D signal input pin |
| 142 | VREF | VREF | - | - | - | - | - | - | Reference voltage (+3.3V) input pin for A/D port |
| 143 | AVCC | AVCC | - | - | - | - | - | - | +3.3V |
| 144 | P05/IRQ13-A/TMO3/ RxD4/TCK | NC | I | M3VPu | - | I | I | I | Unused |

## ADV3002BSTZ (HDMI : U1001)

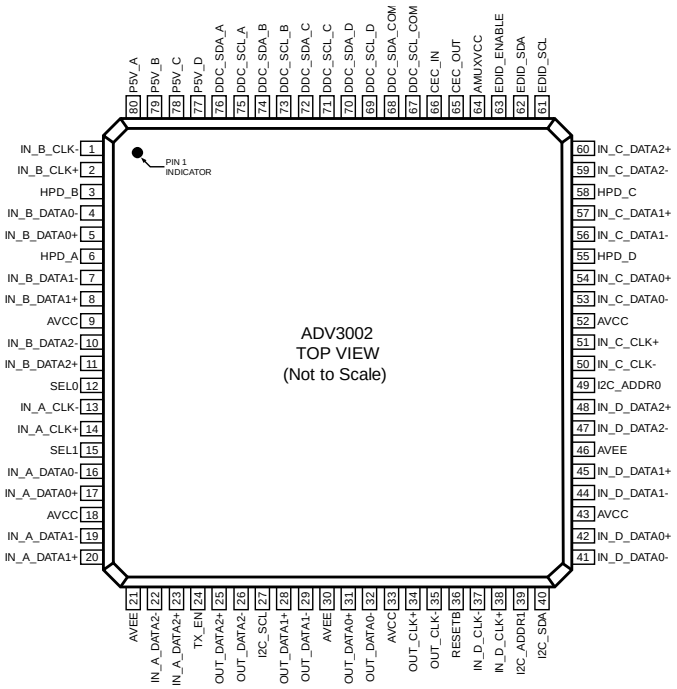


## ADV3002BSTZ Block diagram

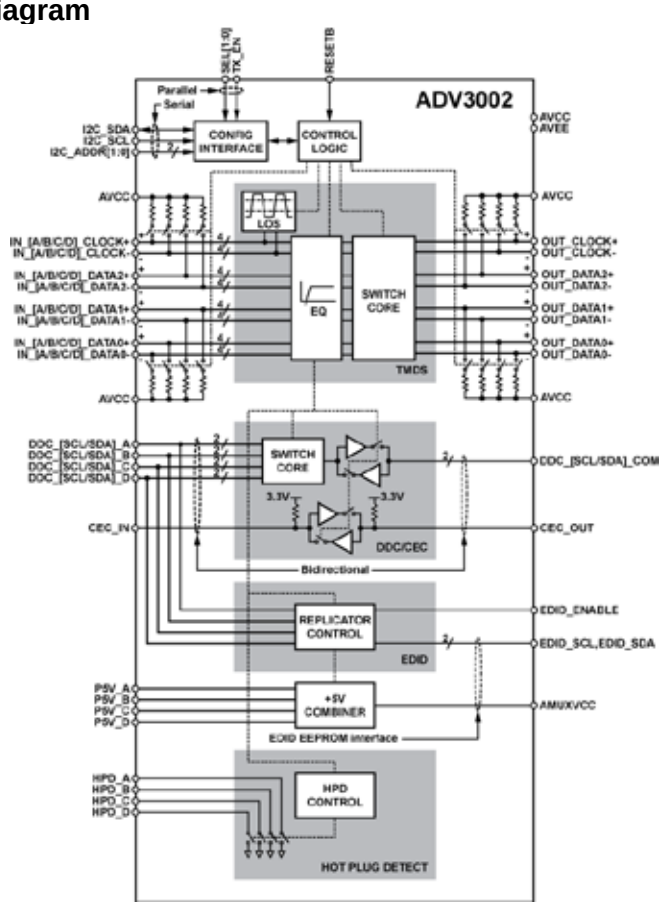

## AD8195ACPZ (HDMI : U1201)

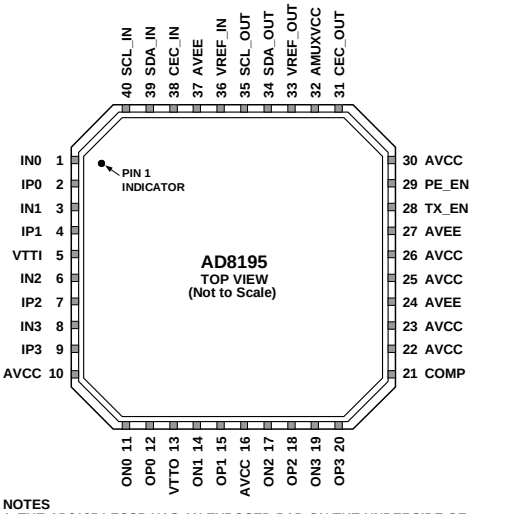


NOTES
1. THE AD8195 LFCSP HAS AN EXPOSED PAD ON THE UNDERSIDE OF THE PACKAGE THAT AIDS IN HEAT DISSIPATION. THE PAD MUST BE ELECTRICALLY CONNECTED TO THE AVEE SUPPLY PLANE IN ORDER TO MEET THERMAL SPECIFICATIONS.

07049-003

## AD8195ACPZ Terminl Function

| Pin No. | Mnemonic | Type[1] | Description |
|---|---|---|---|
| 1 | IN0 | HS I | High Speed Input Complement. |
| 2 | IP0 | HS I | High Speed Input. |
| 3 | IN1 | HS I | High Speed Input Complement. |
| 4 | IP1 | HS I | High Speed Input. |
| 5 | VTTI | Power | Input Termination Supply. Nominally connected to AVCC. |
| 6 | IN2 | HS I | High Speed Input Complement. |
| 7 | IP2 | HS I | High Speed Input. |
| 8 | IN3 | HS I | High Speed Input Complement. |
| 9 | IP3 | HS I | High Speed Input. |
| 10, 16, 22, 23, 25, 26, 30 | AVCC | Power | Positive Analog Supply. 3.3 V nominal. |
| 11 | ON0 | HS O | High Speed Output Complement. |
| 12 | OP0 | HS O | High Speed Output. |
| 13 | VTTO | Power | Output Termination Supply. Nominally connected to AVCC. |
| 14 | ON1 | HS O | High Speed Output Complement. |
| 15 | OP1 | HS O | High Speed Output. |
| 17 | ON2 | HS O | High Speed Output Complement. |
| 18 | OP2 | HS O | High Speed Output. |
| 19 | ON3 | HS O | High Speed Output Complement. |
| 20 | OP3 | HS O | High Speed Output. |
| 21 | COMP | Control | Power-On Compensation Pin. Bypass to ground through a 10 µF capacitor. |
| 24, 27, 37, Exposed Pad | AVEE | Power | Negative Analog Supply. 0 V nominal. |
| 28 | TX_EN | Control | High Speed Output Enable Parallel Interface. |
| 29 | PE_EN | Control | High Speed Preemphasis Enable Parallel Interface. |
| 31 | CEC_OUT | LS I/O | CEC Output Side. |
| 32 | AMUXVCC | Power | Positive Auxiliary Buffer Supply. 5 V nominal. |

## AD8195ACPZ Block diagram

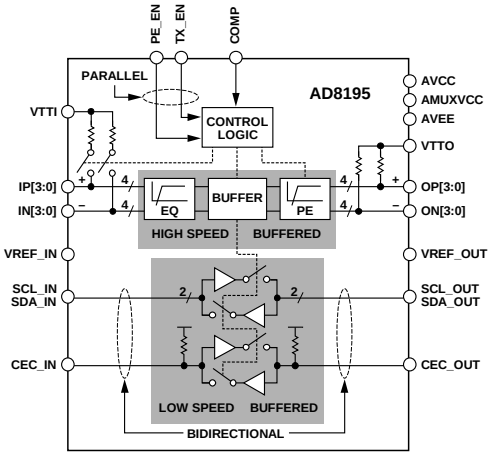

## PCM9211 (DIGITAL : U2203)

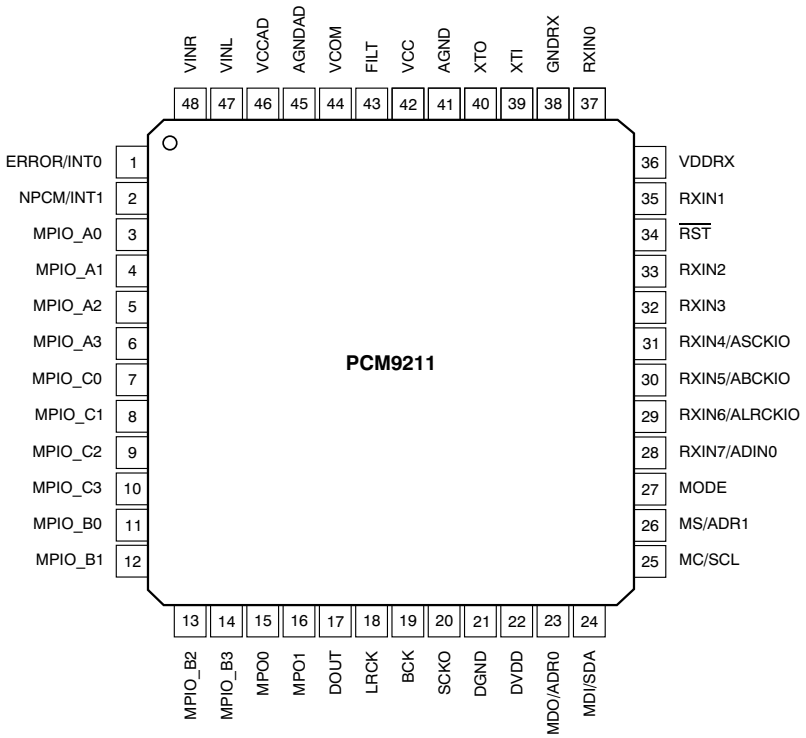


## PIN Functions

| PIN | | | | DESCRIPTION |
|---|---|---|---|---|
| NO. | NAME | I/O | 5-V TOLERANT | |
| 1 | ERROR/INT0 | O | No | DIR Error detection output / Interrupt0 output |
| 2 | NPCM/INT1 | O | No | DIR Non-PCM detection output / Interrupt1 output |
| 3 | MPIO_A0 | I/O | Yes | Multipurpose I/O, Group A(1) |
| 4 | MPIO_A1 | I/O | Yes | Multipurpose I/O, Group A(1) |
| 5 | MPIO_A2 | I/O | Yes | Multipurpose I/O, Group A(1) |
| 6 | MPIO_A3 | I/O | Yes | Multipurpose I/O, Group A(1) |
| 7 | MPIO_C0 | I/O | Yes | Multipurpose I/O, Group C(1) |
| 8 | MPIO_C1 | I/O | Yes | Multipurpose I/O, Group C(1) |
| 9 | MPIO_C2 | I/O | Yes | Multipurpose I/O, Group C(1) |
| 10 | MPIO_C3 | I/O | Yes | Multipurpose I/O, Group C(1) |
| 11 | MPIO_B0 | I/O | Yes | Multipurpose I/O, Group B(1) |
| 12 | MPIO_B1 | I/O | Yes | Multipurpose I/O, Group B(1) |
| 13 | MPIO_B2 | I/O | Yes | Multipurpose I/O, Group B(1) |
| 14 | MPIO_B3 | I/O | Yes | Multipurpose I/O, Group B(1) |
| 15 | MPO0 | O | No | Multipurpose output 0 |
| 16 | MPO1 | O | No | Multipurpose output 1 |
| 17 | DOUT | O | No | Main output port, serial digital audio data output |
| 18 | LRCK | O | No | Main output port, LR clock output |
| 19 | BCK | O | No | Main output port, Bit clock output |
| 20 | SCKO | O | No | Main output port, System clock output |
| 21 | DGND | – | – | Ground, for digital |
| 22 | DVDD | – | – | Power supply, 3.3 V (typ.), for digital |
| 23 | MDO/ADR0 | I/O | Yes | Software control I/F, SPI data output / I2C slave address setting0(2) |
| 24 | MDI/SDA | I/O | Yes | Software control I/F, SPI data input / I2C data input/output(2) (3) |
| 25 | MC/SCL | I | Yes | Software control I/F, SPI clock input / I2C clock input(2) |
| 26 | MS/ADR1 | I | Yes | Software control I/F, SPI chip select / I2C slave address setting1(2) |
| 27 | MODE | I | No | Control mode setting, (see the Serial Control Mode section, Control Mode Pin Setting) |
| 28 | RXIN7/ADIN0 | I | Yes | Biphase signal, input 7 / AUXIN0, serial audio data input(2) |
| 29 | RXIN6/ALRCKI0 | I | Yes | Biphase signal, input 6 / AUXIN0, LR clock input(2) |
| 30 | RXIN5/ABCKI0 | I | Yes | Biphase signal, input 5 / AUXIN0, bit clock input(2) |
| 31 | RXIN4/ASCKI0 | I | Yes | Biphase signal, input 4 / AUXIN0, system clock input(2) |
| 32 | RXIN3 | I | Yes | Biphase signal, input 3(2) |
| 33 | RXIN2 | I | Yes | Biphase signal, input 2(2) |

| PIN | | | | DESCRIPTION |
|---|---|---|---|---|
| NO. | NAME | I/O | 5-V TOLERANT | |
| 34 | RST | I | Yes | Reset Input, active low(2) (4) |
| 35 | RXIN1 | I | Yes | Biphase signal, input 1, built-in coaxial amplifier |
| 36 | VDDRX | – | – | Power supply, 3.3 V (typ.), for RXIN0 and RXIN1. |
| 37 | RXIN0 | I | Yes | Biphase signal, input 0, built-in coaxial amplifier |
| 38 | GNDRX | - | - | Ground, for RXIN |
| 39 | XTI | I | No | Oscillation circuit input for crystal resonator or external XTI clock source input(5) |
| 40 | XTO | O | No | Oscillation circuit output for crystal resonator |
| 41 | AGND | – | – | Ground, for PLL analog |
| 42 | VCC | – | – | Power supply, 3.3 V (typ.), for PLL analog |
| 43 | FILT | O | No | External PLL loop filter connection terminal; must connect recommended filter |
| 44 | VCOM | O | No | ADC common voltage output; must connect external decoupling capacitor |
| 45 | AGNDAD | – | – | Ground, for ADC analog |
| 46 | VCCAD | – | – | Power supply, 5.0 V (typ.), for ADC analog |
| 47 | VINL | I | No | ADC analog voltage input, left channel |
| 48 | VINR | I | No | ADC analog voltage input, right channel |

(1) Schmitt trigger input

(2) Schmitt trigger input

(3) Open-drain configuration in I2C mode

(4) Onboard pull-down resistor (50 kΩ, typical)

(5) CMOS Schmitt trigger input

## PCM9211 BLOCK DIAGRAM

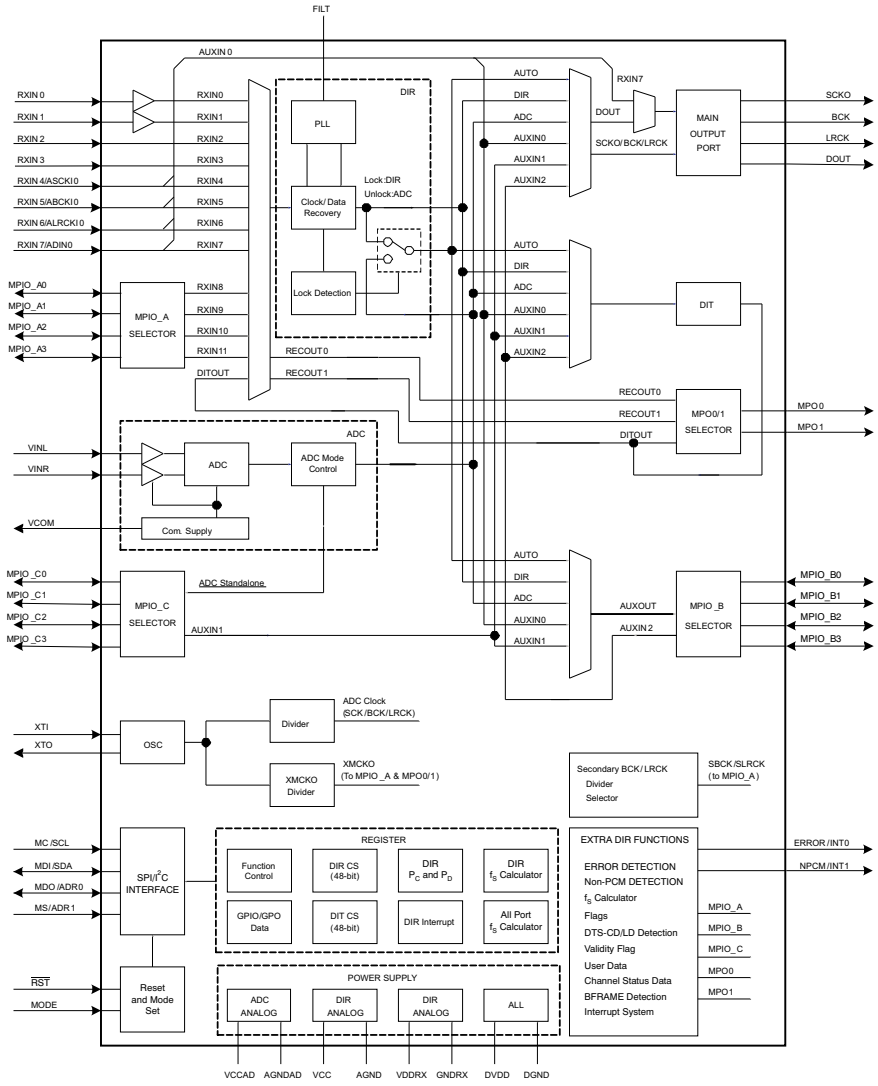

## ADSP21487KSWZ3B (HDMI : U2001)

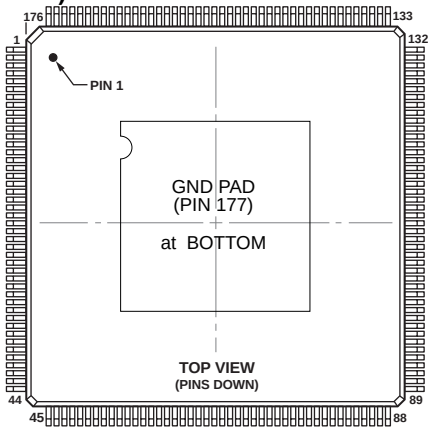


## ADSP21487KSWZ3B Terminal Function

| Pin Name | Pin No. | Pin Name | Pin No. | Pin Name | Pin No. | Pin Name | Pin No. |
|---|---|---|---|---|---|---|---|
| SDDQM | 1 | $V_{DD\_EXT}$ | 45 | DAI_P10 | 89 | $V_{DD\_INT}$ | 133 |
| $\overline{MS0}$ | 2 | DPI_P08 | 46 | $V_{DD\_INT}$ | 90 | FLAG0 | 134 |
| SDCKE | 3 | DPI_P07 | 47 | $V_{DD\_EXT}$ | 91 | FLAG1 | 135 |
| $V_{DD\_INT}$ | 4 | $V_{DD\_INT}$ | 48 | DAI_P20 | 92 | FLAG2 | 136 |
| CLK_CFG1 | 5 | DPI_P09 | 49 | $V_{DD\_INT}$ | 93 | NC | 137 |
| ADDR0 | 6 | DPI_P10 | 50 | DAI_P08 | 94 | FLAG3 | 138 |
| BOOT_CFG0 | 7 | DPI_P11 | 51 | DAI_P14 | 95 | NC | 139 |
| $V_{DD\_EXT}$ | 8 | DPI_P12 | 52 | DAI_P04 | 96 | NC | 140 |
| ADDR1 | 9 | DPI_P13 | 53 | DAI_P18 | 97 | $V_{DD\_EXT}$ | 141 |
| ADDR2 | 10 | DPI_P14 | 54 | DAI_P17 | 98 | NC | 142 |
| ADDR3 | 11 | DAI_P03 | 55 | DAI_P16 | 99 | $V_{DD\_INT}$ | 143 |
| ADDR4 | 12 | NC | 56 | DAI_P12 | 100 | $\overline{TRST}$ | 144 |
| ADDR5 | 13 | $V_{DD\_EXT}$ | 57 | DAI_P15 | 101 | NC | 145 |
| BOOT_CFG1 | 14 | NC | 58 | $V_{DD\_INT}$ | 102 | $\overline{EMU}$ | 146 |
| GND | 15 | NC | 59 | DAI_P11 | 103 | DATA0 | 147 |
| ADDR6 | 16 | NC | 60 | $V_{DD\_EXT}$ | 104 | DATA1 | 148 |
| ADDR7 | 17 | NC | 61 | $V_{DD\_INT}$ | 105 | DATA2 | 149 |
| NC | 18 | $V_{DD\_INT}$ | 62 | BOOT_CFG2 | 106 | DATA3 | 150 |
| NC | 19 | NC | 63 | $V_{DD\_INT}$ | 107 | TDO | 151 |
| ADDR8 | 20 | NC | 64 | AMI_ACK | 108 | DATA4 | 152 |
| ADDR9 | 21 | $V_{DD\_INT}$ | 65 | GND | 109 | $V_{DD\_EXT}$ | 153 |
| CLK_CFG0 | 22 | NC | 66 | THD_M | 110 | DATA5 | 154 |
| $V_{DD\_INT}$ | 23 | NC | 67 | THD_P | 111 | DATA6 | 155 |
| CLKIN | 24 | $V_{DD\_INT}$ | 68 | $V_{DD\_THD}$ | 112 | $V_{DD\_INT}$ | 156 |
| XTAL | 25 | NC | 69 | $V_{DD\_INT}$ | 113 | DATA7 | 157 |
| ADDR10 | 26 | $\overline{WDTRSTO}$ | 70 | $V_{DD\_INT}$ | 114 | TDI | 158 |
| SDA10 | 27 | NC | 71 | $\overline{MS1}$ | 115 | SDCLK | 159 |
| $V_{DD\_EXT}$ | 28 | $V_{DD\_EXT}$ | 72 | $V_{DD\_INT}$ | 116 | $V_{DD\_EXT}$ | 160 |
| $V_{DD\_INT}$ | 29 | DAI_P07 | 73 | WDT_CLKO | 117 | DATA8 | 161 |
| ADDR11 | 30 | DAI_P13 | 74 | WDT_CLKIN | 118 | DATA9 | 162 |
| ADDR12 | 31 | DAI_P19 | 75 | $V_{DD\_EXT}$ | 119 | DATA10 | 163 |
| ADDR17 | 32 | DAI_P01 | 76 | ADDR23 | 120 | TCK | 164 |
| ADDR13 | 33 | DAI_P02 | 77 | ADDR22 | 121 | DATA11 | 165 |
| $V_{DD\_INT}$ | 34 | $V_{DD\_INT}$ | 78 | ADDR21 | 122 | DATA12 | 166 |
| ADDR18 | 35 | NC | 79 | $V_{DD\_INT}$ | 123 | DATA14 | 167 |
| $\overline{RESETOUT}/\overline{RUNRSTIN}$ | 36 | NC | 80 | ADDR20 | 124 | DATA13 | 168 |
| $V_{DD\_INT}$ | 37 | NC | 81 | ADDR19 | 125 | $V_{DD\_INT}$ | 169 |
| DPI_P01 | 38 | NC | 82 | $V_{DD\_EXT}$ | 126 | DATA15 | 170 |
| DPI_P02 | 39 | NC | 83 | ADDR16 | 127 | $\overline{SDWE}$ | 171 |
| DPI_P03 | 40 | $V_{DD\_EXT}$ | 84 | ADDR15 | 128 | $\overline{SDRAS}$ | 172 |
| $V_{DD\_INT}$ | 41 | $V_{DD\_INT}$ | 85 | $V_{DD\_INT}$ | 129 | $\overline{RESET}$ | 173 |
| DPI_P05 | 42 | DAI_P06 | 86 | ADDR14 | 130 | TMS | 174 |
| DPI_P04 | 43 | DAI_P05 | 87 | $\overline{AMI\_WR}$ | 131 | $\overline{SDCAS}$ | 175 |
| DPI_P06 | 44 | DAI_P09 | 88 | $\overline{AMI\_RD}$ | 132 | $V_{DD\_INT}$ | 176 |
| | | | | | | GND | 177* |

* at BOTTOM

## W9864G6JH-6 (HDMI : U2002)

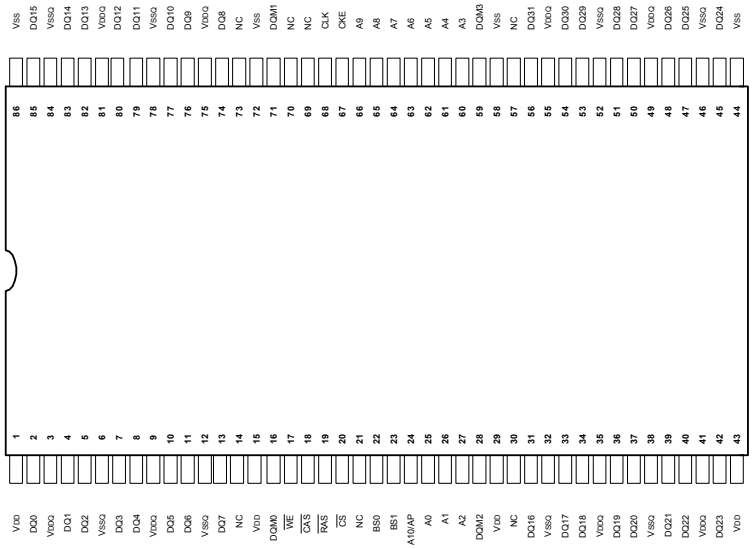


## W9864G6JH-6 Pin description

| PIN NUMBER | PIN NAME | FUNCTION | DESCRIPTION |
|---|---|---|---|
| 24, 25, 26, 27, 60, 61, 62, 63, 64, 65, 66 | A0–A10 | Address | Multiplexed pins for row and column address. Row address: A0–A10. Column address: A0–A7. A10 is sampled during a precharge command to determine if all banks are to be precharged or bank selected by BS0, BS1. |
| 22, 23 | BS0, BS1 | Bank Select | Select bank to activate during row address latch time, or bank to read/write during address latch time. |
| 2, 4, 5, 7, 8, 10, 11, 13, 31, 33, 34, 36, 37, 39, 40, 42, 45, 47, 48, 50, 51, 53, 54, 56, 74, 76, 77, 79, 80, 82, 83, 85 | DQ0–DQ31 | Data Input/ Output | Multiplexed pins for data output and input. |
| 20 | $\overline{CS}$ | Chip Select | Disable or enable the command decoder. When command decoder is disabled, new command is ignored and previous operation continues. |
| 19 | $\overline{RAS}$ | Row Address Strobe | Command input. When sampled at the rising edge of the clock $\overline{RAS}$, $\overline{CAS}$ and $\overline{WE}$ define the operation to be executed. |
| 18 | $\overline{CAS}$ | Column Address Strobe | Referred to $\overline{RAS}$ |
| 17 | $\overline{WE}$ | Write Enable | Referred to $\overline{RAS}$ |
| 16, 28, 59, 71 | DQM0–DQM3 | Input/Output Mask | The output buffer is placed at Hi-Z (with latency of 2) when DQM is sampled high in read cycle. In write cycle, sampling DQM high will block the write operation with zero latency. |
| 68 | CLK | Clock Inputs | System clock used to sample inputs on the rising edge of clock. |
| 67 | CKE | Clock Enable | CKE controls the clock activation and deactivation. When CKE is low, Power Down mode, Suspend mode, or Self Refresh mode is entered. |
| 1, 15, 29, 43 | $V_{DD}$ | Power | Power for input buffers and logic circuit inside DRAM. |
| 44, 58, 72, 86 | $V_{SS}$ | Ground | Ground for input buffers and logic circuit inside DRAM. |
| 3, 9, 35, 41, 49, 55, 75, 81 | $V_{DDQ}$ | Power for I/O Buffer | Separated power from VDD, to improve DQ noise immunity. |
| 6, 12, 32, 38, 46, 52, 78, 84 | $V_{SSQ}$ | Ground for I/O Buffer | Separated ground from VSS, to improve DQ noise immunity. |
| 14, 21, 30, 57, 69, 70, 73 | NC | No Connection | No connection. |

## W9864G6JH-6 Block diagram

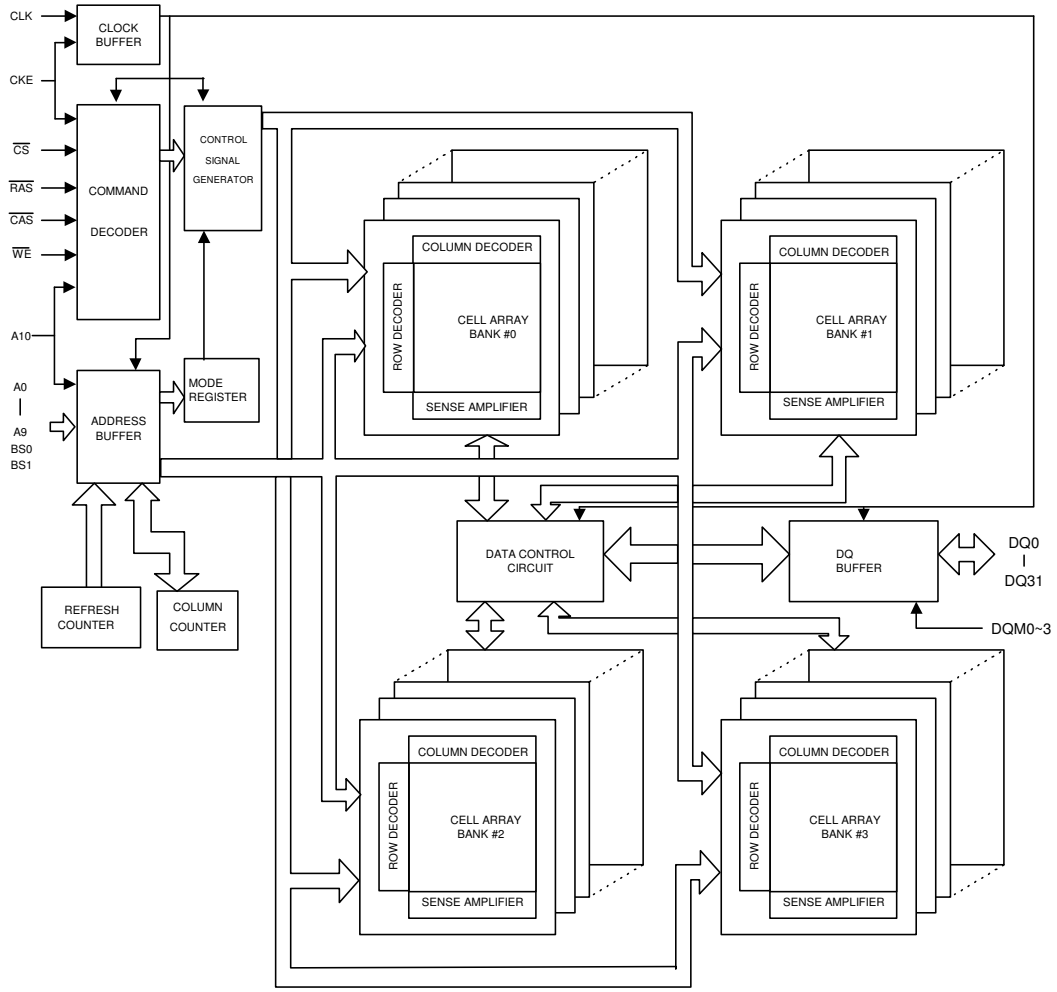

## EN29LV160BB-70TIP (HDMI : U2003)

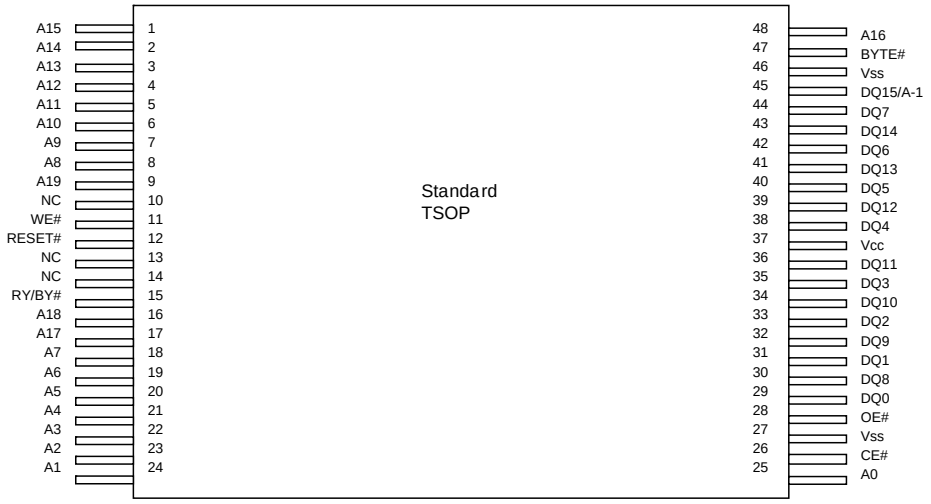


## EN29LV160BB-70TIP Block Diagram

Block Diagram

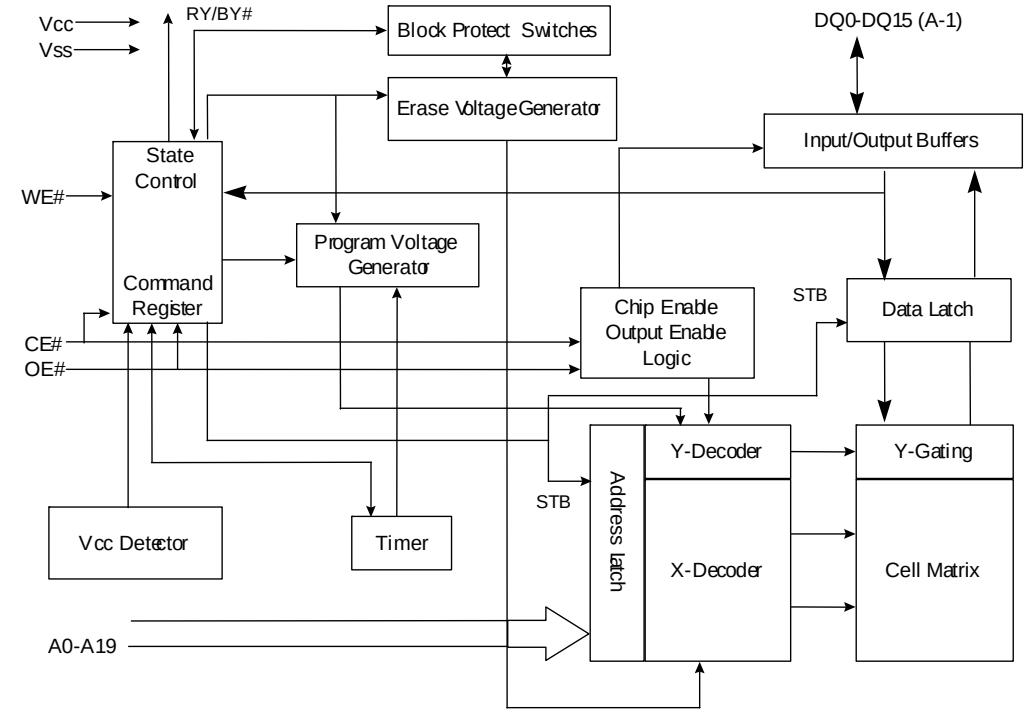

## PCM1690 (HDMI : U2404)

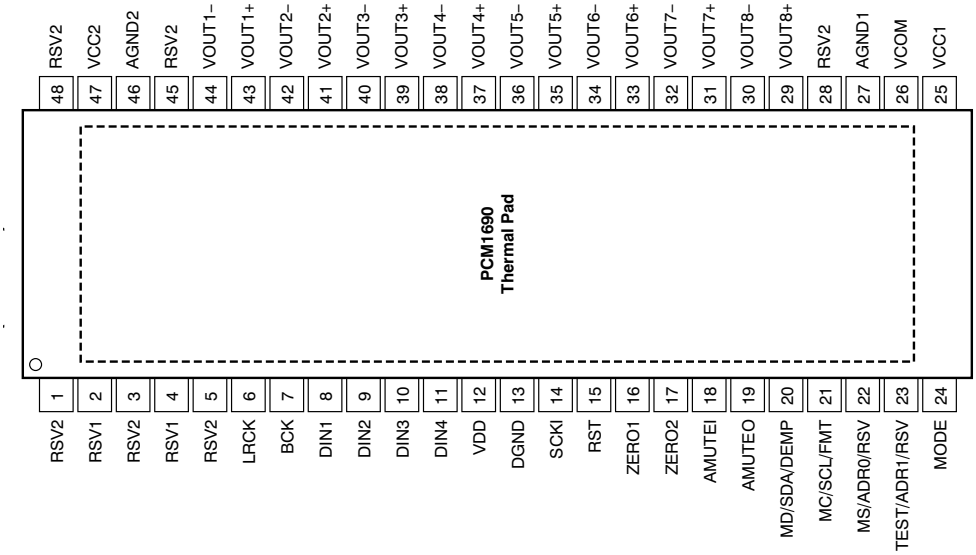


## PCM1690 Pin Function

| TERMINAL | | I/O | PULL-DOWN | 5-V TOLERANT | DESCRIPTION |
|---|---|---|---|---|---|
| NAME | PIN | | | | |
| RSV2 | 1 | — | — | — | Reserved, tied to analog ground |
| RSV1 | 2 | — | — | — | Reserved, left open |
| RSV2 | 3 | — | — | — | Reserved, tied to analog ground |
| RSV1 | 4 | — | — | — | Reserved, left open |
| RSV2 | 5 | — | — | — | Reserved, tied to analog ground |
| LRCK | 6 | I | Yes | No | Audio data word clock input |
| BCK | 7 | I | Yes | No | Audio data bit clock input |
| DIN1 | 8 | I | No | No | Audio data input for DAC1 and DAC2 |
| DIN2 | 9 | I | No | No | Audio data input for DAC3 and DAC4 |
| DIN3 | 10 | I | No | No | Audio data input for DAC5 and DAC6 |
| DIN4 | 11 | I | No | No | Audio data input for DAC7 and DAC8 |
| VDD | 12 | — | — | — | Digital power supply, +3.3 V |
| DGND | 13 | — | — | — | Digital ground |
| SCKI | 14 | I | No | Yes | System clock input |
| RST | 15 | I | Yes | Yes | Reset and power-down control input with active low |
| ZERO1 | 16 | O | No | No | Zero detect flag output 1 |
| ZERO2 | 17 | O | No | No | Zero detect flag output 2 |
| AMUTEI | 18 | I | No | Yes | Analog mute control input with active low |
| AMUTEO | 19 | O | No | Yes | Analog mute status output(1) with active low |
| MD/SDA/DEMP | 20 | I/O | No | Yes | Input data for SPI, data for I2C(1), de-emphasis control for hardware control mode |
| MC/SCL/FMT | 21 | I | No | Yes | Clock for SPI, clock for I2C, format select for hardware control mode |
| MS/ADR0/RSV | 22 | I | Yes | Yes | Chip Select for SPI, address select 0 for I2C, reserve (set low) for hardware control mode |
| TEST/ADR1/RSV | 23 | I/O | No | Yes | Test (factory use, left open) for SPI, address select 1 for I2C, reserve (set low) for hardware control mode |
| MODE | 24 | I | No | No | Control port mode selection. Tied to VDD: SPI, left open: H/W mode, tied to DGND: I2C |
| VCC1 | 25 | — | — | — | Analog power supply 1, +5 V |
| VCOM | 26 | — | — | — | Voltage common decoupling |
| AGND1 | 27 | — | — | — | Analog ground 1 |
| RSV2 | 28 | — | — | — | Reserved, tied to analog ground |
| VOUT8+ | 29 | O | No | No | Positive analog output from DAC8 |
| VOUT8- | 30 | O | No | No | Negative analog output from DAC8 |
| VOUT7+ | 31 | O | No | No | Positive analog output from DAC7 |
| VOUT7- | 32 | O | No | No | Negative analog output from DAC7 |
| VOUT6+ | 33 | O | No | No | Positive analog output from DAC6 |
| VOUT6- | 34 | O | No | No | Negative analog output from DAC6 |
| VOUT5+ | 35 | O | No | No | Positive analog output from DAC5 |
| VOUT5- | 36 | O | No | No | Negative analog output from DAC5 |
| VOUT4+ | 37 | O | No | No | Positive analog output from DAC4 |
| VOUT4- | 38 | O | No | No | Negative analog output from DAC4 |
| VOUT3+ | 39 | O | No | No | Positive analog output from DAC3 |
| VOUT3- | 40 | O | No | No | Negative analog output from DAC3 |
| VOUT2+ | 41 | O | No | No | Positive analog output from DAC2 |
| VOUT2- | 42 | O | No | No | Negative analog output from DAC2 |

| TERMINAL | | I/O | PULL-DOWN | 5-V TOLERANT | DESCRIPTION |
|---|---|---|---|---|---|
| NAME | PIN | | | | |
| VOUT1+ | 43 | O | No | No | Positive analog output from DAC1 |
| VOUT1- | 44 | O | No | No | Negative analog output from DAC1 |
| RSV2 | 45 | — | — | — | Reserved, tied to analog ground |
| AGND2 | 46 | — | — | — | Analog ground 2 |
| VCC2 | 47 | — | — | — | Analog power supply 2, +5 V |
| RSV2 | 48 | — | — | — | Reserved, tied to analog ground |

(1) Open-drain configuration in out mode.

## PCM1690 FUNCTIONAL BLOCK DIAGRAM

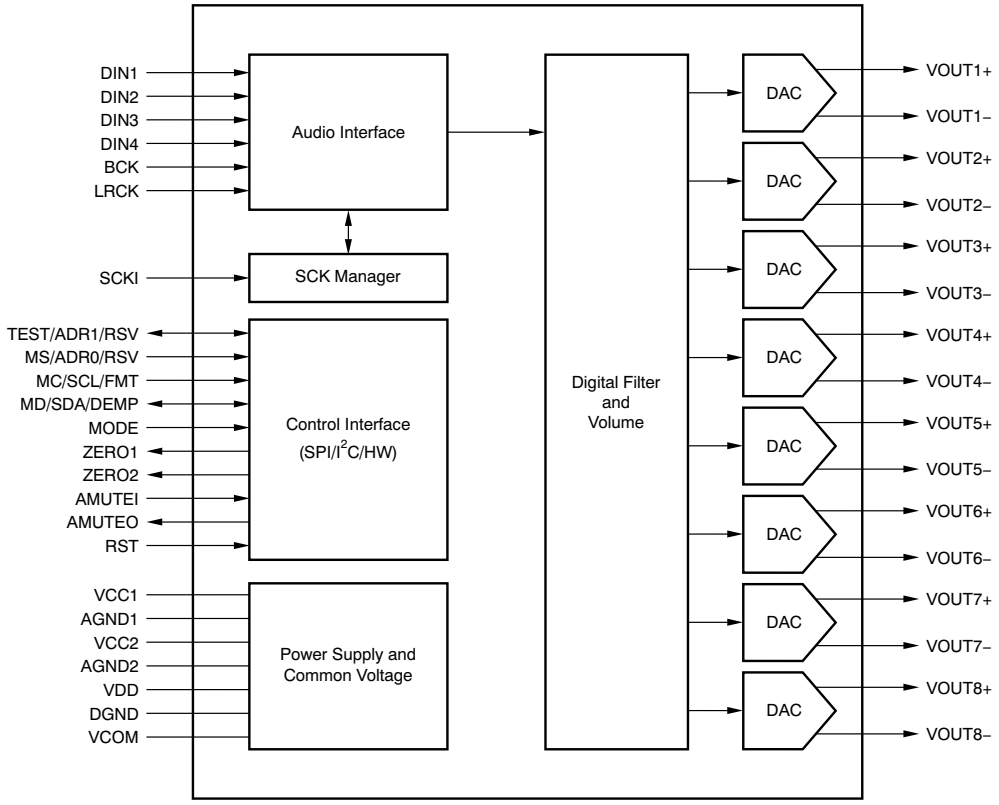

## PCM5100 (HDMI:U2401)

**PCM510X (top view)**

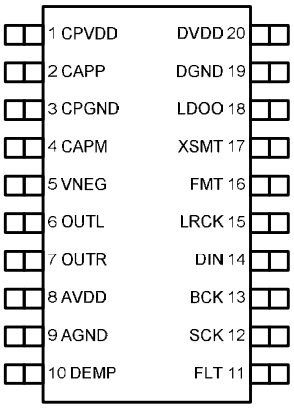


**Table 2. TERMINAL FUNCTIONS, PCM510x**

| TERMINAL | | I/O | DESCRIPTION |
|---|---|---|---|
| NAME | NO. | | |
| CPVDD | 1 | - | Charge pump power supply, 3.3V |
| CAPP | 2 | O | Charge pump flying capacitor terminal for positive rail |
| CPGND | 3 | - | Charge pump ground |
| CAPM | 4 | O | Charge pump flying capacitor terminal for negative rail |
| VNEG | 5 | O | Negative charge pump rail terminal for decoupling, -3.3V |
| OUTL | 6 | O | Analog output from DAC left channel |
| OUTR | 7 | O | Analog output from DAC right channel |
| AVDD | 8 | - | Analog power supply, 3.3V |
| AGND | 9 | - | Analog ground |
| DEMP | 10 | I | De-emphasis control for 44.1kHz sampling rate(1): Off (Low) / On (High) |
| FLT | 11 | I | Filter select : Normal latency (Low) / Low latency (High) |
| SCK | 12 | I | System clock input |
| BCK | 13 | I | Audio data bit clock input |
| DIN | 14 | I | Audio data input |
| LRCK | 15 | I | Audio data word clock input |
| FMT | 16 | I | Audio format selection : $I^2S$ (Low) / Left justified (High) |
| XSMT | 17 | I | Soft mute control : Soft mute (Low) / soft un-mute (High) |
| LDOO | 18 | - | Internal logic supply rail terminal for decoupling |
| DGND | 19 | - | Digital ground |
| DVDD | 20 | - | Digital power supply, 3.3V |

(1) Failsafe LVCMOS Schmitt trigger input

## PCM5100 Block Diagram

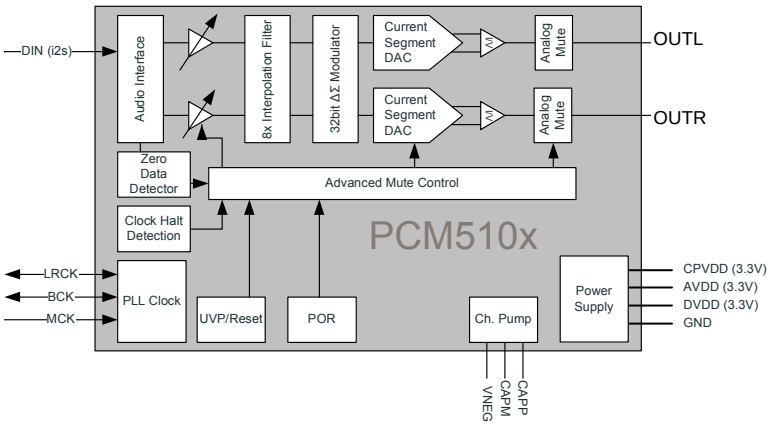


**Figure 1. PCM510x Functional Block Diagram**

## H27U1G8F2BTR-BC (HDMI : U2603)

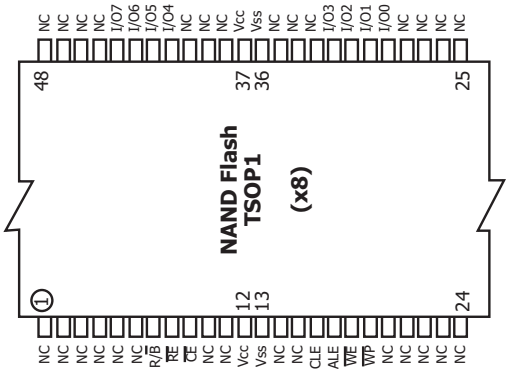


## H27U1G8F2BTR-BC Pin Function

| Pin Name | Description |
|---|---|
| IO0 ~ IO7 | **DATA INPUTS/OUTPUTS**<br>The IO pins allow to input command, address and data and to output data during read / program operations. The inputs are latched on the rising edge of Write Enable ($\overline{WE}$). The I/O buffer float to High-Z when the device is deselected or the outputs are disabled. |
| CLE | **COMMAND LATCH ENABLE**<br>This input activates the latching of the IO inputs inside the Command Register on the Rising edge of Write Enable ($\overline{WE}$). |
| ALE | **ADDRESS LATCH ENABLE**<br>This input activates the latching of the IO inputs inside the Address Register on the Rising edge of Write Enable ($\overline{WE}$). |
| $\overline{CE}$ | **CHIP ENABLE**<br>This input controls the selection of the device. |
| $\overline{WE}$ | **WRITE ENABLE**<br>This input acts as clock to latch Command, Address and Data. The IO inputs are latched on the rise edge of $\overline{WE}$. |
| $\overline{RE}$ | **READ ENABLE**<br>The $\overline{RE}$ input is the serial data-out control, and when active drives the data onto the I/O bus. Data is valid tREA after the falling edge of $\overline{RE}$ which also increments the internal column address counter by one. |
| $\overline{WP}$ | **WRITE PROTECT**<br>The $\overline{WP}$ pin, when Low, provides an Hardware protection against undesired modify (program / erase) operations. |
| R/$\overline{B}$ | **READY BUSY**<br>The Ready/Busy output is an Open Drain pin that signals the state of the memory. |
| Vcc | **SUPPLY VOLTAGE**<br>The Vcc supplies the power for all the operations (Read, Write, Erase). |
| Vss | GROUND |
| NC | NO CONNECTION |

## H27U1G8F2BTR-BC Block Diagram

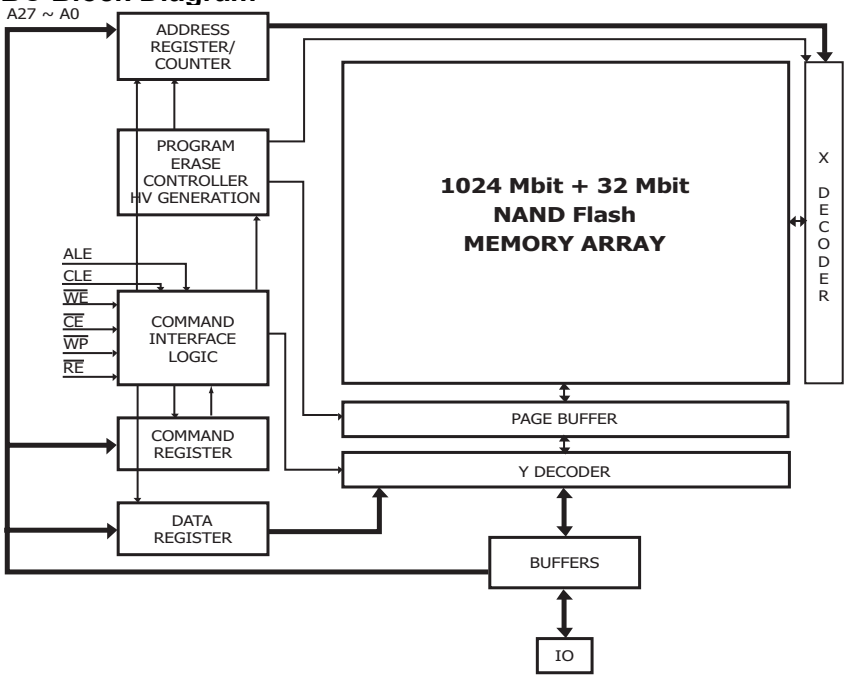

## A3V56S30FTP-G6 (HDMI:U2604,2605)

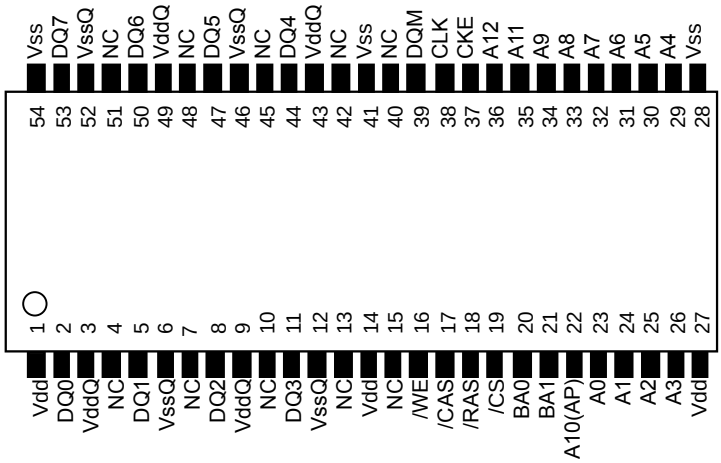


## A3V56S30FTP-G6 Pin Function

**Pin Descriptions**

| SYMBOL | TYPE | DESCRIPTION |
|---|---|---|
| CLK | Input | Clock: CLK is driven by the system clock. All SDRAM input signals are sampled on the positive edge of CLK. CLK also increments the internal burst counter and controls the output registers. |
| CKE | Input | Clock Enable: CKE activates (HIGH) and deactivates (LOW) the CLK signal. Deactivating the clock provides PRECHARGE POWER-DOWN and SELF REFRESH operation (all banks idle), ACTIVE POWER-DOWN (row active in any bank), or CLOCK SUSPEND operation (burst / access in progress). CKE is synchronous except after the device enters self refresh mode, where CKE becomes asynchronous until after exiting the same mode. The input buffers, including CLK, are disabled during self refresh mode, providing low standby power. CKE may be tied HIGH. |
| /CS | Input | Chip Select: /CS enables (registered LOW) and disables (registered HIGH) the command decoder. All commands are masked when /CS is registered HIGH. /CS provides for external bank selection on systems with multiple banks. /CS is considered part of the command code. |
| /CAS, /RAS, /WE | Input | Command Inputs: /CAS, /RAS, and /WE (along with /CS) define the command being entered. |
| DQM, DQML, DQMU, | Input | Input / Output Mask: DQM is sampled HIGH and is an input mask signal for write accesses and an output disable signal for read accesses. Input data is masked during a WRITE cycle. The output buffers are placed in a High-Z state (two-clock latency) when during a READ cycle. DQM corresponds to DQ0–DQ7 (A3V56S30FTP). DQML corresponds to DQ0–DQ7, DQMU corresponds to DQ8–DQ15 (A3V56S40FTP). |
| BA0, BA1 | Input | Bank Address Input(s): BA0 and BA1 define to which bank the ACTIVE, READ, WRITE or PRECHARGE command is being applied. |
| A0–A12 | Input | A0-12 specify the Row / Column Address in conjunction with BA0,1. The Row Address is specified by A0-12. The Column Address is specified by A0-9(x8) and A0-8(x16). A10 is also used to indicate precharge option. When A10 is high at a read / write command, an auto precharge is performed. When A10 is high at a precharge command, all banks are precharged. |
| DQ0–DQ15 | I/O | Data Input / Output: Data bus. |
| NC | – | Internally Not Connected: These could be left unconnected, but it is recommended they be connected or Vss. |
| VddQ | Supply | Data Output Power: Provide isolated power to output buffers for improved noise immunity. |
| VssQ | Supply | Data Output Ground: Provide isolated ground to output buffers for improved noise immunity. |
| Vdd | Supply | Power for the input buffers and core logic. |
| Vss | Supply | Ground for the input buffers and core logic. |

**A3V56S30FTP-G6 Block Diagram**

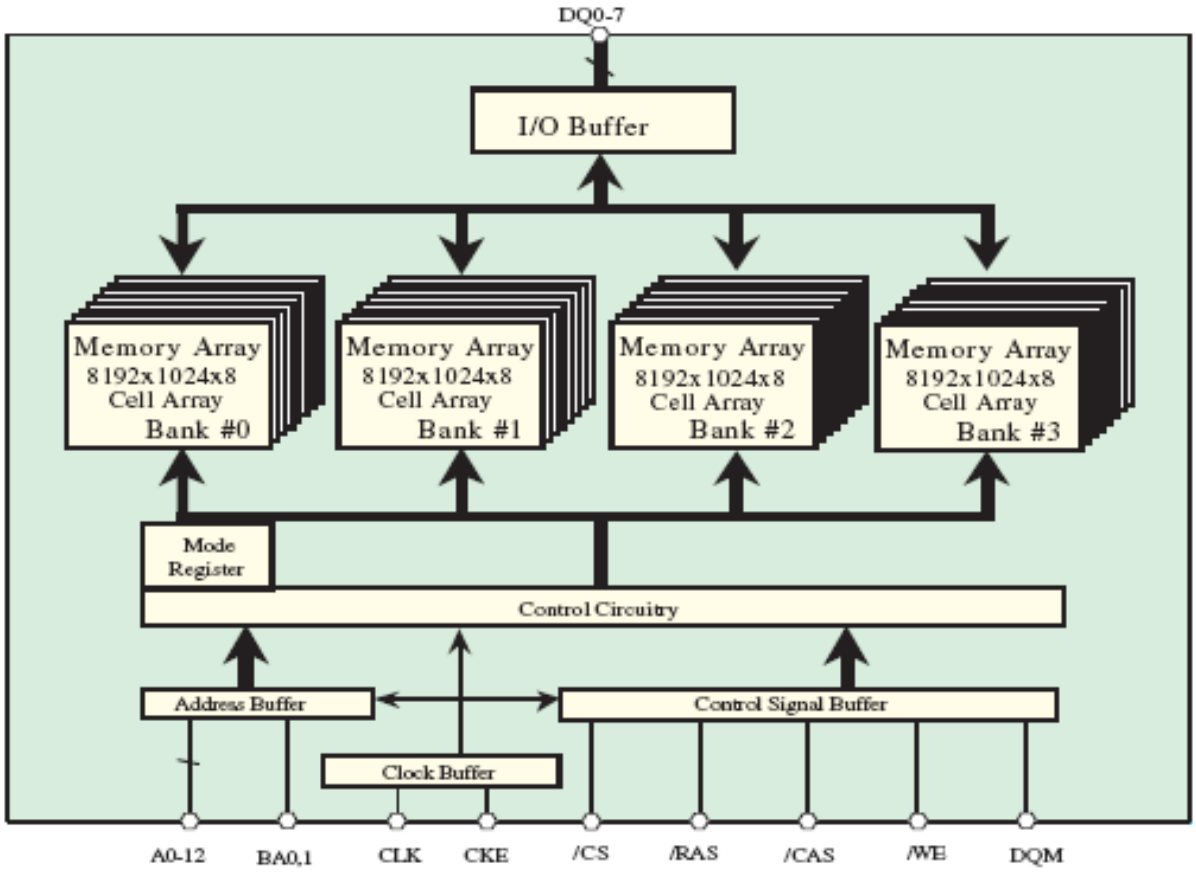

## R2A15218FP (INPUT : IC4200)

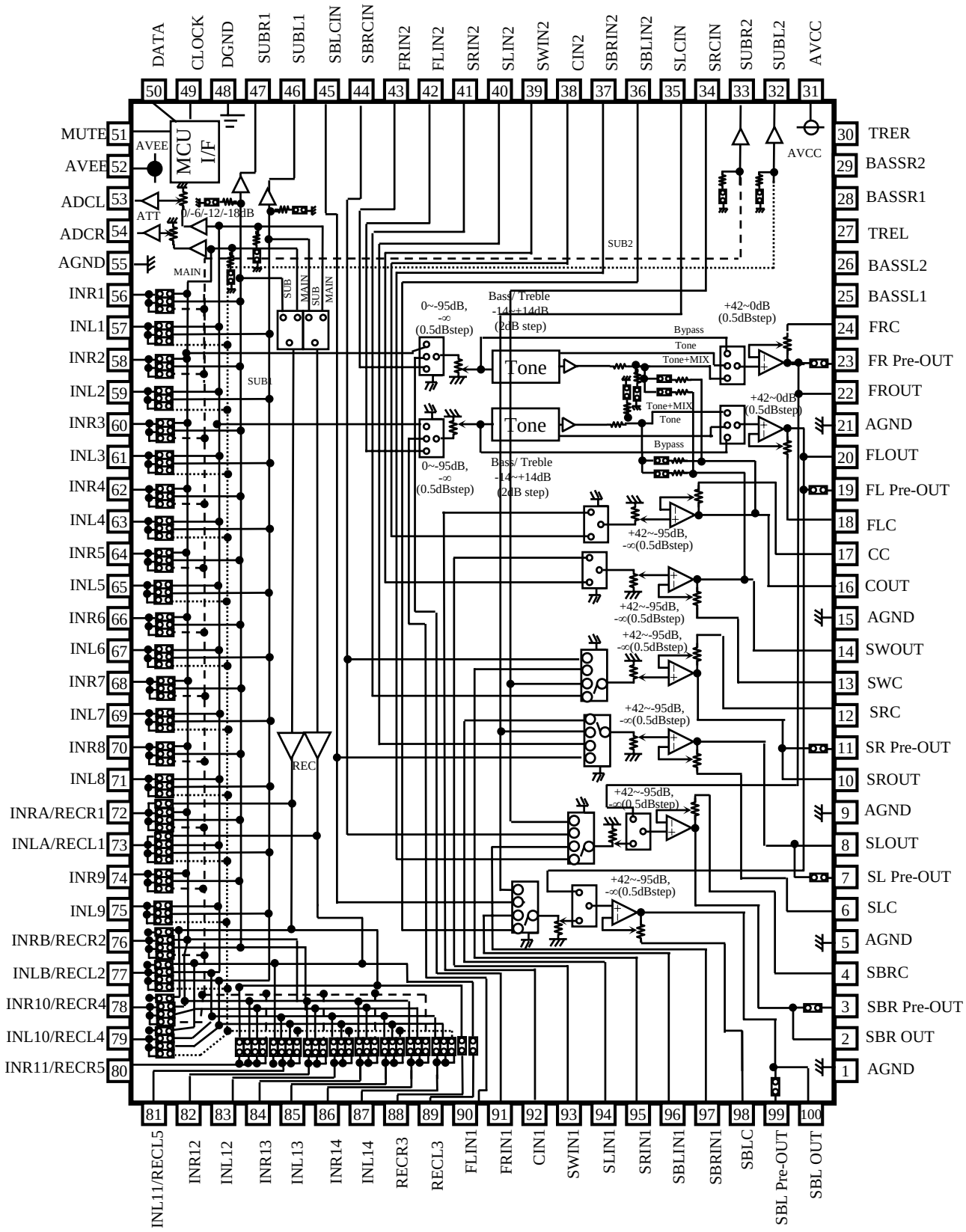

## R2A15218FP Pin Function

| PIN No. | Name | Function |
|---|---|---|
| 22,20,<br>16,14,<br>10, 8,<br>2, 100 | FROUT,FLOUT,<br>COUT,SWOUT,<br>SROUT, SLOUT,<br>SBROUT,SBLOUT | Output pin of FL/FR/C/SW/SL/SR/SBL/SBR channel |
| 23,19,<br>11, 7,<br>3, 99 | FR Pre-out,FL Pre-out,<br>SR Pre-out, SL Pre-out,<br>SBR Pre-out,SBL Pre-out | Pre-output pin of FL/FR/SL/SR/SBL/SBR channel |
| 24,18,<br>17,13,<br>12, 6,<br>4, 98 | FRC,FLC,<br>CC,SWC,<br>SRC,SLC,<br>SBRC,SBLC | Connects capacitor for reducing click noise of<br>L/R/C/SW/SL/SR/SBL/SBR channel volume |
| 1,5,9,15,<br>21,55,98 | AGND | Analog ground of internal circuit |
| 27,30 | TREL, TRER | Frequency characteristic setting pin of L/R channel tone control (Treble) |
| 25,26,<br>28,29 | BASSL1,BASSL2<br>BASSR1,BASSR2 | Frequency characteristic setting pin of L/R channel tone control (Bass) |
| 31 | AVCC | Positive power supply to internal circuit |
| 43,42,<br>41,40,<br>39,38,<br>37,36 | FRIN2, FLIN2,<br>SRN2,SLIN2,<br>SWIN2,CIN2,<br>SBRIN2,SBLIN2 | Multi Input pin of L/R/C/SW/SL/SR/SBL/SBR channel (Multi IN 1/2) |
| 90,91,<br>92,93,<br>94,95,<br>96,97 | FLIN1, FRIN1,<br>CIN1,SWIN1,<br>SLIN1,SRIN1,<br>SBLIN1,SBRIN1 | |
| 48 | DGND | Digital ground of internal circuit |
| 49 | DATA | Input pin of control data |
| 50 | CLOCK | Input pin of control clock |
| 52 | AVEE | Negative power supply to internal circuit |
| 57,59,61,63,<br>65,67,69,71,<br>75,83,85,87 | INL1,INL2, INL3,INL4,<br>INL5,INL6,INL7,INL8,<br>INL9,INL12,INL13,INL14 | Input pin of L/R channel (Input Selector) |
| 56,58,60,62,<br>64,6668,70,<br>74,82,84,86 | INR1,INR2, INR3,INR4,<br>INR5,INR6,INR7,INR8,<br>INR9,INR12,INR13,INR14 | |
| 51 | MUTE | Outside Mute Control PIN |
| 44,45<br>34,35 | SBRCIN,SBLCIN<br>SRCIN,SLCIN | 3rd Multi Input pin for SBL/SBR/SL/SR channel Volume<br>that is able to swap SBR/SBL with SR/SL |
| 46,47<br>33,32 | SUBL1,SUBR1<br>SUBL2,SUBR2 | Output pin for L/R channel SUB1/SUB2 Output |
| 53,54 | ADCL, ADCR | Output pin for L/R channel ADC |
| 88,89 | RECR3,RECL3 | Output pin for L/R channel REC Output |
| 72,73,<br>76,77,<br>78,79<br>80,81 | INRA/RECR1,INLA/RECL1,<br>INRB/RECR2,INLB/RECL2,<br>INR10/RECR4,INL10/RECL4,<br>INR11/RECR5,INL11/RECL5 | Input pin of L/R channel (Input Selector)/<br>Output pin for L/R channel REC Output |

**NJW1194A (AUDIO : IC484,IC489)**

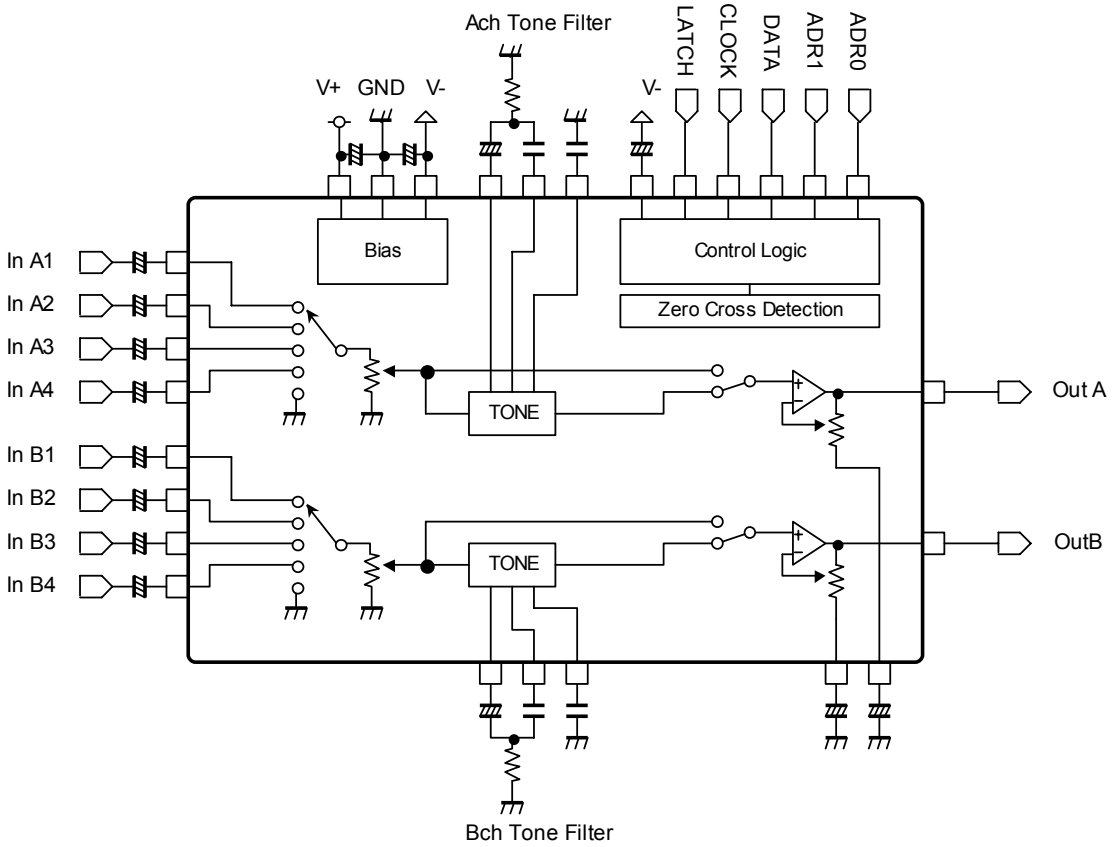


**NJM2586AM (VIDEO : IC5003)**

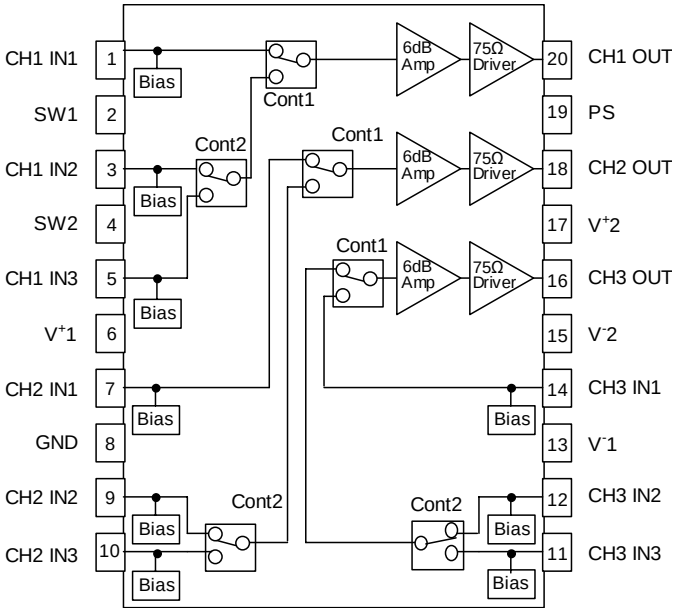


**SSOP20-C3**

## 2. FL DISPLAY

### FLD (018BT021GINK) (FRONT : FL4400)

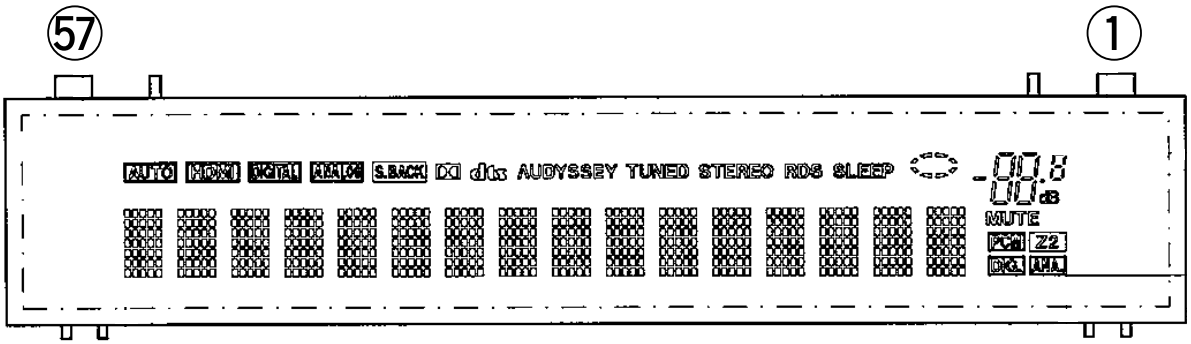


### PIN CONNECTION

PIN CONNECTION

| PIN NO. | 57 | 56 | 55 | 54 | 53 | 52 | 51 |
|---|---|---|---|---|---|---|---|
| CONNECTION | F2 | NP | NP | NP | NC | LGND | PGND | VH |

| PIN NO. | 50 | 49 | 48 | 47 | 46 | 45 | 44 | 43 | 42 | 41 | 40 | 39 | 38 | 37 | 36 | 35 | 34 | 33 | 32 | 31 | 30 | 29 | 28 | 27 | 26 | 25 | 24 | 23 | 22 | 21 | 20 | 19 | 18 | 17 | 16 | 15 | 14 | 13 | 12 | 11 | 10 | 9 | 8 | 7 | 6 | 5 | 4 | 3 | 2 | 1 |
|---|---|---|---|---|---|---|---|---|---|---|---|---|---|---|---|---|---|---|---|---|---|---|---|---|---|---|---|---|---|---|---|---|---|---|---|---|---|---|---|---|---|---|---|---|---|---|---|---|---|---|
| CONNECTION | VDD | OSC | -RESET | -CS | CP | DA | TSA | TSB | NX | NX | NX | NX | NX | NX | NX | NX | NX | NX | NX | NX | NX | NX | NX | NX | NX | NX | NX | NX | NX | NX | NX | NX | NX | NX | NX | NX | NX | NX | NX | NX | NX | NX | NX | 18G | 17G | Q18G | Q17G | NP | NP | NP | F1 |

NOTE
1) F1,F2 --- Filament
2) NP ------ No pin
3) DL ------ Datum Line
4) NX ------ No extend pin
5) LGND -----Logic GND pin
6) PGND -----Power GND pin
7) VH ------ High Voltage Supply pin
8) VDD ----- Logic Voltage Supply pin
9) CP ------ Shift Register Clock
10) DA ------ Serial Data Input
11) TSA,B --- Test pin
12) $\overline{CS}$ ------ Chip Select Input pin
13) $\overline{RESET}$ --- Reset Input
14) OSC ----- Pin for self-oscillation
15) Solder composition is Sn-3Ag-0.5Cu.
16) 17G,18G ----- Grid
17) Q17G,Q18G ----- Driver Output Port.
18) Field of vision is a minimum of 21.8° from the lower side.

## GRID ASSIGNMENT

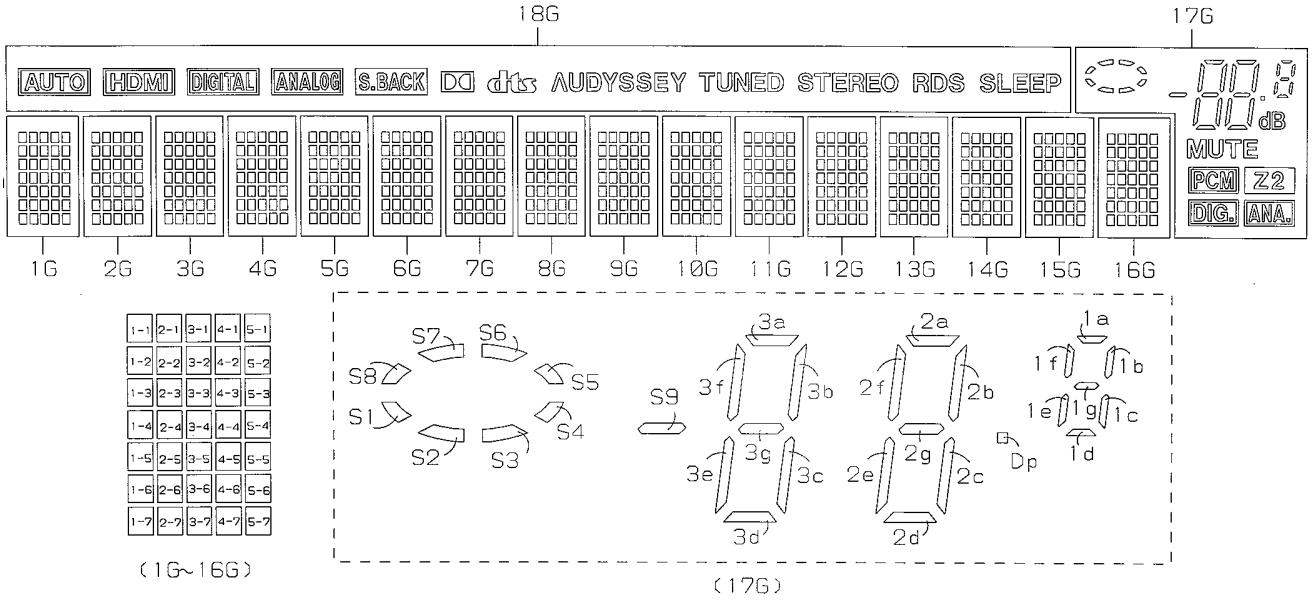

## ANODE CONNECTION

| | 1G | 2G | 3G | 4G | 5G | 6G | 7G | 8G | 9G | 10G | 11G | 12G | 13G | 14G | 15G | 16G | 17G (AD3) | 18G (AD4) |
|---|---|---|---|---|---|---|---|---|---|---|---|---|---|---|---|---|---|---|
| D0 | 1-1 | 1-1 | 1-1 | 1-1 | 1-1 | 1-1 | 1-1 | 1-1 | 1-1 | 1-1 | 1-1 | 1-1 | 1-1 | 1-1 | 1-1 | 1-1 | S9 | - |
| D1 | 2-1 | 2-1 | 2-1 | 2-1 | 2-1 | 2-1 | 2-1 | 2-1 | 2-1 | 2-1 | 2-1 | 2-1 | 2-1 | 2-1 | 2-1 | 2-1 | 3d | - |
| D2 | 3-1 | 3-1 | 3-1 | 3-1 | 3-1 | 3-1 | 3-1 | 3-1 | 3-1 | 3-1 | 3-1 | 3-1 | 3-1 | 3-1 | 3-1 | 3-1 | 2d | - |
| D3 | 4-1 | 4-1 | 4-1 | 4-1 | 4-1 | 4-1 | 4-1 | 4-1 | 4-1 | 4-1 | 4-1 | 4-1 | 4-1 | 4-1 | 4-1 | 4-1 | 3e | - |
| D4 | 5-1 | 5-1 | 5-1 | 5-1 | 5-1 | 5-1 | 5-1 | 5-1 | 5-1 | 5-1 | 5-1 | 5-1 | 5-1 | 5-1 | 5-1 | 5-1 | 2e | - |
| D5 | 1-2 | 1-2 | 1-2 | 1-2 | 1-2 | 1-2 | 1-2 | 1-2 | 1-2 | 1-2 | 1-2 | 1-2 | 1-2 | 1-2 | 1-2 | 1-2 | 3c | - |
| D6 | 2-2 | 2-2 | 2-2 | 2-2 | 2-2 | 2-2 | 2-2 | 2-2 | 2-2 | 2-2 | 2-2 | 2-2 | 2-2 | 2-2 | 2-2 | 2-2 | 2c | - |
| D7 | 3-2 | 3-2 | 3-2 | 3-2 | 3-2 | 3-2 | 3-2 | 3-2 | 3-2 | 3-2 | 3-2 | 3-2 | 3-2 | 3-2 | 3-2 | 3-2 | 3g | - |
| D8 | 4-2 | 4-2 | 4-2 | 4-2 | 4-2 | 4-2 | 4-2 | 4-2 | 4-2 | 4-2 | 4-2 | 4-2 | 4-2 | 4-2 | 4-2 | 4-2 | 2g | - |
| D9 | 5-2 | 5-2 | 5-2 | 5-2 | 5-2 | 5-2 | 5-2 | 5-2 | 5-2 | 5-2 | 5-2 | 5-2 | 5-2 | 5-2 | 5-2 | 5-2 | 3f | - |
| D10 | 1-3 | 1-3 | 1-3 | 1-3 | 1-3 | 1-3 | 1-3 | 1-3 | 1-3 | 1-3 | 1-3 | 1-3 | 1-3 | 1-3 | 1-3 | 1-3 | 2f | - |
| D11 | 2-3 | 2-3 | 2-3 | 2-3 | 2-3 | 2-3 | 2-3 | 2-3 | 2-3 | 2-3 | 2-3 | 2-3 | 2-3 | 2-3 | 2-3 | 2-3 | 3b | - |
| D12 | 3-3 | 3-3 | 3-3 | 3-3 | 3-3 | 3-3 | 3-3 | 3-3 | 3-3 | 3-3 | 3-3 | 3-3 | 3-3 | 3-3 | 3-3 | 3-3 | 2b | - |
| D13 | 4-3 | 4-3 | 4-3 | 4-3 | 4-3 | 4-3 | 4-3 | 4-3 | 4-3 | 4-3 | 4-3 | 4-3 | 4-3 | 4-3 | 4-3 | 4-3 | 3a | - |
| D14 | 5-3 | 5-3 | 5-3 | 5-3 | 5-3 | 5-3 | 5-3 | 5-3 | 5-3 | 5-3 | 5-3 | 5-3 | 5-3 | 5-3 | 5-3 | 5-3 | 2a | - |
| D15 | 1-4 | 1-4 | 1-4 | 1-4 | 1-4 | 1-4 | 1-4 | 1-4 | 1-4 | 1-4 | 1-4 | 1-4 | 1-4 | 1-4 | 1-4 | 1-4 | Dp | - |
| D16 | 2-4 | 2-4 | 2-4 | 2-4 | 2-4 | 2-4 | 2-4 | 2-4 | 2-4 | 2-4 | 2-4 | 2-4 | 2-4 | 2-4 | 2-4 | 2-4 | dB | - |
| D17 | 3-4 | 3-4 | 3-4 | 3-4 | 3-4 | 3-4 | 3-4 | 3-4 | 3-4 | 3-4 | 3-4 | 3-4 | 3-4 | 3-4 | 3-4 | 3-4 | 1d | - |
| D18 | 4-4 | 4-4 | 4-4 | 4-4 | 4-4 | 4-4 | 4-4 | 4-4 | 4-4 | 4-4 | 4-4 | 4-4 | 4-4 | 4-4 | 4-4 | 4-4 | 1e | - |
| D19 | 5-4 | 5-4 | 5-4 | 5-4 | 5-4 | 5-4 | 5-4 | 5-4 | 5-4 | 5-4 | 5-4 | 5-4 | 5-4 | 5-4 | 5-4 | 5-4 | 1c | - |
| D20 | 1-5 | 1-5 | 1-5 | 1-5 | 1-5 | 1-5 | 1-5 | 1-5 | 1-5 | 1-5 | 1-5 | 1-5 | 1-5 | 1-5 | 1-5 | 1-5 | 1g | - |
| D21 | 2-5 | 2-5 | 2-5 | 2-5 | 2-5 | 2-5 | 2-5 | 2-5 | 2-5 | 2-5 | 2-5 | 2-5 | 2-5 | 2-5 | 2-5 | 2-5 | 1f | - |
| D22 | 3-5 | 3-5 | 3-5 | 3-5 | 3-5 | 3-5 | 3-5 | 3-5 | 3-5 | 3-5 | 3-5 | 3-5 | 3-5 | 3-5 | 3-5 | 3-5 | 1b | - |
| D23 | 4-5 | 4-5 | 4-5 | 4-5 | 4-5 | 4-5 | 4-5 | 4-5 | 4-5 | 4-5 | 4-5 | 4-5 | 4-5 | 4-5 | 4-5 | 4-5 | 1a | AUTO |
| D24 | 5-5 | 5-5 | 5-5 | 5-5 | 5-5 | 5-5 | 5-5 | 5-5 | 5-5 | 5-5 | 5-5 | 5-5 | 5-5 | 5-5 | 5-5 | 5-5 | S1 | HDMI |
| D25 | 1-6 | 1-6 | 1-6 | 1-6 | 1-6 | 1-6 | 1-6 | 1-6 | 1-6 | 1-6 | 1-6 | 1-6 | 1-6 | 1-6 | 1-6 | 1-6 | S2 | DIGITAL |
| D26 | 2-6 | 2-6 | 2-6 | 2-6 | 2-6 | 2-6 | 2-6 | 2-6 | 2-6 | 2-6 | 2-6 | 2-6 | 2-6 | 2-6 | 2-6 | 2-6 | S3 | ANALOG |
| D27 | 3-6 | 3-6 | 3-6 | 3-6 | 3-6 | 3-6 | 3-6 | 3-6 | 3-6 | 3-6 | 3-6 | 3-6 | 3-6 | 3-6 | 3-6 | 3-6 | S4 | S.BACK |
| D28 | 4-6 | 4-6 | 4-6 | 4-6 | 4-6 | 4-6 | 4-6 | 4-6 | 4-6 | 4-6 | 4-6 | 4-6 | 4-6 | 4-6 | 4-6 | 4-6 | S5 | DD |
| D29 | 5-6 | 5-6 | 5-6 | 5-6 | 5-6 | 5-6 | 5-6 | 5-6 | 5-6 | 5-6 | 5-6 | 5-6 | 5-6 | 5-6 | 5-6 | 5-6 | S6 | dts |
| D30 | 1-7 | 1-7 | 1-7 | 1-7 | 1-7 | 1-7 | 1-7 | 1-7 | 1-7 | 1-7 | 1-7 | 1-7 | 1-7 | 1-7 | 1-7 | 1-7 | S7 | AUDYSSEY |
| D31 | 2-7 | 2-7 | 2-7 | 2-7 | 2-7 | 2-7 | 2-7 | 2-7 | 2-7 | 2-7 | 2-7 | 2-7 | 2-7 | 2-7 | 2-7 | 2-7 | S8 | TUNED |
| D32 | 3-7 | 3-7 | 3-7 | 3-7 | 3-7 | 3-7 | 3-7 | 3-7 | 3-7 | 3-7 | 3-7 | 3-7 | 3-7 | 3-7 | 3-7 | 3-7 | MUTE | STEREO |
| D33 | 4-7 | 4-7 | 4-7 | 4-7 | 4-7 | 4-7 | 4-7 | 4-7 | 4-7 | 4-7 | 4-7 | 4-7 | 4-7 | 4-7 | 4-7 | 4-7 | PCM | RDS |
| D34 | 5-7 | 5-7 | 5-7 | 5-7 | 5-7 | 5-7 | 5-7 | 5-7 | 5-7 | 5-7 | 5-7 | 5-7 | 5-7 | 5-7 | 5-7 | 5-7 | Z2 | SLEEP |
| AD1 | - | - | - | - | - | - | - | - | - | - | - | - | - | - | - | - | DIG. | - |
| AD2 | - | - | - | - | - | - | - | - | - | - | - | - | - | - | - | - | ANA. | - |

**MAIN PCB ASS'Y**

**NOTE:** The symbols in the column "Remarks" indicate the following destinations.
E400E3 : U.S.A. & Canada model
X2000E3 : U.S.A. & Canada model X2000E2 : Europe model X2000E1C : China model X2000E1 : Asia model X2000K : Japan model

| | REF No. | Part No. | Part Name | Remarks | | Q'ty | New | Ver |
|---|---|---|---|---|---|---|---|---|
| **SEMICONDUCTORS GROUP** | | | | | | | | |
| | D4000-4004 | 963201500170D | LBAS16HT1G FAST SWITCHING SOD-323 | | K005041480230S | 5 | | |
| | D4007 | 00D2760401905 | 1SS133-DO34-AXIAL LRC | | K000013300040S | 1 | | |
| | D4008 | 963203500300D | DIODE BRIDGE D10SB60 600V/10A STRAIGHT TYPE | | K047100600220S | 1 | | |
| | D4013 | 00D9630236504 | RB721Q-40-DO34-AXIAL LRC | | K120072140040S | 1 | | |
| | D4014,4015 | 963201500160D | 1N4007 52REEL 1000V 1A | | K000400700220S | 2 | | |
| | D4016 | 00D2760401905 | 1SS133-DO34-AXIAL LRC | | K000013300040S | 1 | | |
| | D4017,4018 | 963201500160D | 1N4007 52REEL 1000V 1A | | K000400700220S | 2 | | |
| | D4019 | 00D2760401905 | 1SS133-DO34-AXIAL LRC | | K000013300040S | 1 | | |
| | D4020-4022 | 963201500160D | 1N4007 52REEL 1000V 1A | | K000400700220S | 3 | | |
| | D4023 | 00D9630236504 | RB721Q-40-DO34-AXIAL LRC | | K120072140040S | 1 | | |
| | D4024,4025 | 963201500160D | 1N4007 52REEL 1000V 1A | | K000400700220S | 2 | | |
| | D4027-4030 | 963201500160D | 1N4007 52REEL 1000V 1A | | K000400700220S | 4 | | |
| | D4031,4032 | 00D2760401905 | 1SS133-DO34-AXIAL LRC | | K000013300040S | 2 | | |
| | D4033-4036 | 963201500160D | 1N4007 52REEL 1000V 1A | | K000400700220S | 4 | | |
| | D4037 | 00D2760401905 | 1SS133-DO34-AXIAL LRC | | K000013300040S | 1 | | |
| | D4038 | 963201500160D | 1N4007 52REEL 1000V 1A | | K000400700220S | 1 | | |
| | IC4000 | 00D2631100005 | KIA7805API,20W-TO220IS MOLD | | J126780500110S | 1 | | |
| | IC4001 | 00D2631099006 | KIA7905PI,20W-TO220IS MOLD | | J126790500070S | 1 | | |
| | IC4002 | 00D2631100050 | KIA7808API,20W-TO220IS | | J126780800050S | 1 | | |
| | IC4003 | 00D2631100005 | KIA7805API,20W-TO220IS MOLD | | J126780500110S | 1 | | |
| | IC4004 | 00D2631251006 | KIA7908PI,20W-TO220IS | | J126790800060S | 1 | | |
| | PACK4000 | 963183012380S | KST-MW004MV1-S63SV 4GANG+MW+50US NA | E400E3,X2000E3 | E903004100031S | 1 | | |
| | PACK4000 | 943183100220S | KST-MW004FV1-S63 4GANG+FM ONLY+50US | X2000E1C,K | E900004010630S | 1 | | |
| | PACK4000 | 963183100350S | TUNER,FM // KST-MW104FV1-S63G 4GANG+FM ONLY+50US+RDS | X2000E2,E1 | E900104012630S | 1 | * | |
| | Q4000-4004 | 943215500020S | RT1P141C 0.2W/SC-59 ISAHAYA | | J520101411210S | 5 | | |
| | Q4005-4009 | 943216500020S | RT1N141C 0.2W/SC-59 ISAHAYA | | J522101411210S | 5 | | |
| | ZD4002 | 963202500330D | ZJ6.8B-0.5W/5MA-52MM SEMTECH | | K06006R844522S | 1 | | |
| | | | | | | | | |
| **RESISTOR GROUP** | | | | | | | | |
| | R4000,4001 | 963125010110S | 470-J,2W-R.REEL | | C060047166060S | 2 | | |
| | R4002 | nsp | 10-J,1/5W-52RE-AX | | C00001006P520S | 1 | | |
| | R4003 | 963125010100S | 10-J 2W, R-REEL | | C060010066050S | 1 | | |
| | R4004 | nsp | 10-J,1/5W-52RE-AX | | C00001006P520S | 1 | | |
| | R4005 | 963125010100S | 10-J 2W, R-REEL | | C060010066050S | 1 | | |
| | R4006 | nsp | 10-J,1/5W-52RE-AX | | C00001006P520S | 1 | | |
| | R4007 | 963125010100S | 10-J 2W, R-REEL | | C060010066050S | 1 | | |
| | R4008 | nsp | 10-J,1/5W-52RE-AX | | C00001006P520S | 1 | | |
| | R4009 | 963125010100S | 10-J 2W, R-REEL | | C060010066050S | 1 | | |
| | R4010 | nsp | 10-J,1/5W-52RE-AX | | C00001006P520S | 1 | | |
| | R4011 | 963125010100S | 10-J 2W, R-REEL | | C060010066050S | 1 | | |
| | R4012 | nsp | 10-J,1/5W-52RE-AX | | C00001006P520S | 1 | | |
| | R4013 | 963125010100S | 10-J 2W, R-REEL | | C060010066050S | 1 | | |
| | R4014 | nsp | 10-J,1/5W-52RE-AX | | C00001006P520S | 1 | | |
| | R4015 | 963125010100S | 10-J 2W, R-REEL | | C060010066050S | 1 | | |
| | R4016 | nsp | 100-J,1/5W-52RE-AX | | C00001016P520S | 1 | | |
| | R4017-4020 | nsp | 20-J,1/5W-52RE-AX | | C00002006P520S | 4 | | |
| | R4025-4027 | 963125500070D | 1.1K-J,1W-R.REEL | | C060011265050S | 3 | | |
| | R4029 | nsp | 10K-J,1/4W-R.REEL | | C060103063050S | 1 | | |
| | R4032 | nsp | JUMPER (0.6/52MM) | | L045084006040S | 1 | | |
| | R4039,4040 | nsp | 82K-J,1/16W-1608REEL | | C20008236M160S | 2 | | |
| | R4041 | nsp | 100-J,1/16W-1608REEL | | C20001016M160S | 1 | | |
| | R4042 | nsp | 33-J,1/16W-1608REEL | | C20003306M160S | 1 | | |
| | R4043 | nsp | 100-J,1/16W-1608REEL | | C20001016M160S | 1 | | |
| | R4046 | nsp | 1K-J,1/16W-1608REEL | | C20001026M160S | 1 | | |
| | R4048 | nsp | 33-J,1/16W-1608REEL | | C20003306M160S | 1 | | |
| | R4054,4055 | nsp | 0-J,1/10W-2012REEL | | C200000060200S | 2 | | |
| | | | | | | | | |
| **CAPACIITORS GROUP** | | | | | | | | |
| | C4000 | nsp | MI-0.047UF-J/50V-5RE | | D020473167050S | 1 | | |
| | C4002 | 963133501560S | ST-0.022UF-J/100V-5RE MANUAL | | D02122306C050S | 1 | * | |
| | C4005 | 963133501560S | ST-0.022UF-J/100V-5RE MANUAL | | D02122306C050S | 1 | * | |
| | C4006 | nsp | MI-0.047UF-J/50V-5RE | | D020473167050S | 1 | | 4 |
| | C4009 | 963133501560S | ST-0.022UF-J/100V-5RE MANUAL | | D02122306C050S | 1 | * | |
| | C4011 | nsp | MI-0.047UF-J/50V-5RE | | D020473167050S | 1 | | 4 |
| | C4013 | 963133501560S | ST-0.022UF-J/100V-5RE MANUAL | | D02122306C050S | 1 | * | |
| | C4015 | 963133501560S | ST-0.022UF-J/100V-5RE MANUAL | | D02122306C050S | 1 | * | |
| | C4017 | nsp | MI-0.047UF-J/50V-5RE | | D020473167050S | 1 | | 4 |
| | C4019 | 963133501560S | ST-0.022UF-J/100V-5RE MANUAL | | D02122306C050S | 1 | * | |
| | C4022 | 963133501560S | ST-0.022UF-J/100V-5RE MANUAL | | D02122306C050S | 1 | * | |
| | C4023 | nsp | MI-0.047UF-J/50V-5RE | | D020473167050S | 1 | | |
| | C4025 | nsp | MI-0.047UF-J/50V-5RE | | D020473167050S | 1 | | |
| | C4027 | nsp | X7R1000PF-K/50V-1608REEL | | D011102777160S | 1 | | |
| | C4030 | nsp | MI-0.047UF-J/50V-5RE | | D020473167050S | 1 | | |
| | C4032 | nsp | X7R1000PF-K/50V-1608REEL | | D011102777160S | 1 | | |
| | C4035 | nsp | X7R1000PF-K/50V-1608REEL | | D011102777160S | 1 | | |
| | C4038 | nsp | X7R1000PF-K/50V-1608REEL | | D011102777160S | 1 | | |
| | C4041 | nsp | X7R1000PF-K/50V-1608REEL | | D011102777160S | 1 | | |
| | C4044 | nsp | X7R1000PF-K/50V-1608REEL | | D011102777160S | 1 | | |
| | C4047 | nsp | X7R1000PF-K/50V-1608REEL | | D011102777160S | 1 | | |
| | C4049 | 00D2544574922 | 100UF-M/50V,8*11.5-5RE.SMS SY | | D040101087060S | 1 | | |
| | C4050,4051 | 963133501570S | ST-0.1UF-J/100V-5RE MANUAL | | D02110406C050S | 2 | * | |
| | C4052 | 963134501800D | 10000UF-M/71V,35*50 BULK LAO-71V103MS57P5W1#B | E400,X2000E1C,E3,K | D040103089220S | 1 | | |
| | C4052 | 963134502420S | 12000UF-M/71V, 35*50 BULK LAO-71V123MS59P#B ELNA | X2000E2,E1 | D040123089220S | 1 | * | |
| | C4053 | 00D2544573981 | 10UF-M/50V,5*11-5RE.SMS SY | | D040100087070S | 1 | | |
| | C4054 | 963134501800D | 10000UF-M/71V,35*50 BULK LAO-71V103MS57P5W1#B | E400,X2000E1C,E3,K | D040103089220S | 1 | | |
| | C4054 | 963134502420S | 12000UF-M/71V, 35*50 BULK LAO-71V123MS59P#B ELNA | X2000E2,E1 | D040123089220S | 1 | * | |
| | C4057 | 963134502400S | MI-0.1UF-J/50V-5RE | | D020104167050S | 1 | * | |
| | C4059 | 963134011290S | 4700UF-M/16V,16*25-L.BLK SMS 5.0MC SY | | D040472083020S | 1 | | |
| | C4060,4061 | 00D2544573981 | 10UF-M/50V,5*11-5RE.SMS SY | | D040100087070S | 2 | | |
| | C4062 | 00D9630217002 | 3300UF-M/16V,12.5*25L.BLK SHL 5.0MC SY | | D040332083010S | 1 | | |
| | C4063 | 00D2544573981 | 10UF-M/50V,5*11-5RE.SMS SY | | D040100087070S | 1 | | |
| | C4064 | 963134502380S | 470UF-M/50V,12.5*20L BULK 5.0MC SMS SY | | D040471087010S | 1 | * | |
| | C4065 | 90M-OA000500R | 4700UF-M/25V(MHA),16*25 P=7.5 L.BLK | | D040472084240S | 1 | | |
| | C4066 | 963134502390S | 470UF-M/50V,10*20 BULK SHL SY | | D040471087040S | 1 | * | |
| | C4067 | 90M-OA000500R | 4700UF-M/25V(MHA),16*25 P=7.5 L.BLK | | D040472084240S | 1 | | |
| | C4068 | 963134502390S | 470UF-M/50V,10*20 BULK SHL SY | | D040471087040S | 1 | * | |
| | C4077-4081 | nsp | COG100PF-J/50V-1608REEL | | D010101167160S | 5 | | |
| | C4082 | nsp | X7R0.1UF-K/50V-1608REEL | | D011104577160S | 1 | | |
| | | | | | | | | |

| | REF No. | Part No. | Part Name | Remarks | | Q'ty | New | Ver |
|---|---|---|---|---|---|---|---|---|
| **OTHER PARTS GROUP** | | | | | | | | |
| | BD4000 | nsp | CBW160808U121T 120ohm SMD1608 TYPE | | D340160811210S | 1 | | |
| | BKT4143 | nsp | AVR1611BKE3 SECC t1.0+Sn plating /PCB MTG | | 4010214876000S | 1 | | |
| | CN4211 | nsp | 260MM/3P 5264-03=CKM2509HV-03 RD1569#20 105C | | L0002610301l0S | 1 | | |
| | CN4212 | nsp | 120MM/10P 20010HS-10=CKM2002HV-10 WH1007#26 연접 | | L002121102620S | 1 | | |
| | CN4213 | nsp | 220MM/5P 5264-05=CKM2509HV-05 RD1569#20 105C | | L0002210500l0S | 1 | | |
| | CP4000 | nsp | 35328-0360, 7.92MM HEADER,VER,3CKT | | L108353280360S | 1 | | |
| | CP4002 | nsp | C125Z1-15 15P BtoB HEADER(MALE) P=1.25MM | | L109012511520S | 1 | | |
| | CP4003 | nsp | C125Z1-19 19P BtoB HEADER(MALE) P=1.25MM | | L1090125119l0S | 1 | | |
| | CP4006 | nsp | C125Z1-11 11P BtoB HEADER(MALE) P=1.25MM | | L109012511120S | 1 | | |
| | CP4007 | nsp | C125Z1-09 9P BtoB HEADER(MALE) P=1.25MM | | L1090125109l0S | 1 | | |
| | J4000-4030 | nsp | JUMPER (0.6/52MM) | | L0450840060l0S | 31 | | |
| | J4041-4054 | nsp | JUMPER (0.6/52MM) | | L0450840060l0S | 14 | | |
| | J4063-4066 | nsp | JUMPER (0.6/52MM) | | L0450840060l0S | 4 | | |
| | J4069-4072 | nsp | JUMPER (0.6/52MM) | | L0450840060l0S | 4 | | |
| | J4075 | nsp | JUMPER (0.6/52MM) | | L0450840060l0S | 1 | | |
| | J4087 | nsp | JUMPER (0.6/52MM) | | L0450840060l0S | 1 | | |
| | J4091-4098 | nsp | JUMPER (0.6/52MM) | | L0450840060l0S | 8 | | |
| | J4100-4108 | nsp | JUMPER (0.6/52MM) | | L0450840060l0S | 9 | | |
| | J4110 | nsp | JUMPER (0.6/52MM) | | L0450840060l0S | 1 | | |
| | J4115 | nsp | JUMPER (0.6/52MM) | | L0450840060l0S | 1 | | |
| | J4117-4122 | nsp | JUMPER (0.6/52MM) | | L0450840060l0S | 6 | | |
| | JACK4000 | 963646100510S | SJ2005S-A006-00A200B(RD,BK) PUSH | E400E3 | G6112005SA00JS | 1 | * | |
| | JACK4000 | 963646100520S | SJ2003S-A006-00A200B(RD,BK) BINDING | X2000E1C,E2,E3,K | G6112003SA00JS | 1 | * | |
| | JACK4001 | 963646100510S | SJ2005S-A006-00A200B(RD,BK) PUSH | E400E3 | G6112005SA00JS | 1 | * | |
| | JACK4001 | 963646100520S | SJ2003S-A006-00A200B(RD,BK) BINDING | X2000E1C,E2,E3,K | G6112003SA00JS | 1 | * | |
| | JACK4002 | 963646100510S | SJ2005S-A006-00A200B(RD,BK) PUSH | E400E3 | G6112005SA00JS | 1 | * | |
| | JACK4002 | 963646100520S | SJ2003S-A006-00A200B(RD,BK) BINDING | X2000E1C,E2,E3,K | G6112003SA00JS | 1 | * | |
| | JACK4003 | 963646100510S | SJ2005S-A006-00A200B(RD,BK) PUSH | E400E3 | G6112005SA00JS | 1 | * | |
| | JACK4003 | 963646100520S | SJ2003S-A006-00A200B(RD,BK) BINDING | X2000E1C,E2,E3,K | G6112003SA00JS | 1 | * | |
| | JACK4004 | 963646100510S | SJ2005S-A006-00A200B(RD,BK) PUSH | E400E3 | G6112005SA00JS | 1 | * | |
| | JACK4004 | 963646100520S | SJ2003S-A006-00A200B(RD,BK) BINDING | X2000E1C,E2,E3,K | G6112003SA00JS | 1 | * | |
| | JACK4005 | 963646100510S | SJ2005S-A006-00A200B(RD,BK) PUSH | E400E3 | G6112005SA00JS | 1 | * | |
| | JACK4005 | 963646100520S | SJ2003S-A006-00A200B(RD,BK) BINDING | X2000E1C,E2,E3,K | G6112003SA00JS | 1 | * | |
| | JACK4006 | 963646100510S | SJ2005S-A006-00A200B(RD,BK) PUSH | E400E3 | G6112005SA00JS | 1 | * | |
| | JACK4006 | 963646100520S | SJ2003S-A006-00A200B(RD,BK) BINDING | X2000E1C,E2,E3,K | G6112003SA00JS | 1 | * | |
| | L4000-4006 | nsp | SP-2507 1.0 PI*2UEW TURNS=7T SPRING COIL | | D330900001330S | 7 | | |
| | RLY4000 | 00D9630218409 | BC3-12 24V 2A 2회로 2접점(SMALL SIGNAL) | | G680240202030S | 1 | | |
| | RLY4001-4004 | 963682100280D | JZC-42F/012-2HST 24.4*12.8*24.8mm | | G680060103010S | 4 | | |

**FRONT PCB ASS'Y**

**NOTE:** The symbols in the column "Remarks" indicate the following destinations.
E400E3 : U.S.A. & Canada model
X2000E3 : U.S.A. & Canada model X2000E2 : Europe model X2000E1C : China model X2000E1 : Asia model X2000K : Japan model

| | REF No. | Part No. | Part Name | Remarks | | Q'ty | New | Ver |
|---|---|---|---|---|---|---|---|---|
| **SEMICONDUCTORS GROUP** | | | | | | | | |
| | D4401,4402 | 963201500160D | 1N4007 52REEL 1000V 1A | | K000400700220S | 2 | | |
| | D4403-4406 | 963201500170D | LBAS16HT1G FAST SWITCHING SOD-323 | | K005041480230S | 4 | | |
| | D4408 | 963201500170D | LBAS16HT1G FAST SWITCHING SOD-323 | | K005041480230S | 1 | | |
| | D4410 | 963201500170D | LBAS16HT1G FAST SWITCHING SOD-323 | | K005041480230S | 1 | | |
| | D4411,4412 | 963209003510S | CDS3C05HDMI1 CERADIODE ESD FOR HDMI 1608REEL | | K067030500010S | 2 | | |
| | D4413 | 963209500020S | CDS3C15GTA 1608REEL CERADIODE ESD B72500D0150A060 | | K067031500010S | 1 | | |
| | IC4400 | 963232100390S | NJM8080G SOP8 DUAL OP AMP | | J1218080000010S | 1 | * | |
| | Q4400 | 943216500050S | RT1N441C 0.2W/SC-59 ISAHAYA | | J5221044112105 | 1 | | |
| | Q4401 | 943215500030S | RT1P441C 0.2W/SC-59 ISAHAYA | | J5201044112105 | 1 | | |
| | Q4402,4403 | 943214500020S | 2SC3052 0.15W/SC-59 REEL ISAHAYA | | J5223052000505 | 2 | | |
| | Q4404 | 00D9630226705 | KTC1027Y,1W/TO92L-REEL | | J5021027Y00205 | 1 | | |
| | Q4405 | 943216500020S | RT1N141C 0.2W/SC-59 ISAHAYA | | J5221014112105 | 1 | | |
| | Q4406 | 963212500030S | ISA1530AC1 0.2W/SC-59 ISAHAYA | | J5200153012105 | 1 | | |
| | Q4407 | 943216500020S | RT1N141C 0.2W/SC-59 ISAHAYA | | J5221014112105 | 1 | | |
| | Q4408 | 963212500030S | ISA1530AC1 0.2W/SC-59 ISAHAYA | | J5200153012105 | 1 | | |
| | ZD4400 | 963202500330D | ZJ6.8B-0.5W/5MA-52MM SEMTECH | | K06006R844522S | 1 | | |
| | ZD4401 | 963202500350D | ZJ22B-0.5W/5MA-52MM SEMTECH | | K06022R044522S | 1 | | |
| | ZD4402 | 963202500340D | ZJ15B-0.5W/5MA-52MM SEMTECH | | K06015R044522S | 1 | | |
| | ZD4403-4405 | 963202500310D | ZJ5.1B-0.5W/5MA-52MM SEMTECH | | K06005R144522S | 3 | | |
| | | | | | | | | |
| **RESISTOR GROUP** | | | | | | | | |
| | R4402 | nsp | 0-J,1/16W-1608REEL | | C20000006M160S | 1 | | |
| | R4403,4404 | nsp | 100-J,1/16W-1608REEL | | C20001016M160S | 2 | | |
| | R4405 | nsp | 1-J,1/16W-1608REEL | | C20000106M160S | 1 | | |
| | R4408 | nsp | 1-J,1/16W-1608REEL | | C20000106M160S | 1 | | |
| | R4409 | nsp | 1K-J,1/16W-1608REEL | | C20001026M160S | 1 | | |
| | R4410 | nsp | 10K-J,1/16W-1608REEL | | C20001036M160S | 1 | | |
| | R4411 | nsp | 100-J,1/16W-1608REEL | | C20001016M160S | 1 | | |
| | R4412 | nsp | 47K-J,1/16W-1608REEL | | C20004736M160S | 1 | | |
| | R4413 | nsp | 100-J,1/16W-1608REEL | | C20001016M160S | 1 | | |
| | R4414 | nsp | 10-J,1/5W-52RE-AX | | C00001006P520S | 1 | | |
| | R4415 | nsp | 100-J,1/16W-1608REEL | | C20001016M160S | 1 | | |
| | R4416 | nsp | 100K-J,1/16W-1608REEL | | C20001046M160S | 1 | | |
| | R4417 | nsp | 150-J,1/16W-1608REEL | | C20001516M160S | 1 | | |
| | R4418,4419 | nsp | 390-J,1/16W-1608REEL | X2000E3 | C20003916M160S | 2 | | |
| | R4420 | nsp | 39K-J,1/5W-52RE-AX | | C00003936P520S | 1 | | |
| | R4421 | nsp | 47K-J,1/16W-1608REEL | X2000E3 | C20004736M160S | 1 | | |
| | R4422 | nsp | 100-J,1/5W-52RE-AX | | C00001016P520S | 1 | | |
| | R4423 | nsp | 100K-J,1/16W-1608REEL | | C20001046M160S | 1 | | |
| | R4424 | nsp | 100-J,1/16W-1608REEL | | C20001016M160S | 1 | | |
| | R4425 | nsp | 39K-J,1/16W-1608REEL | | C20003936M160S | 1 | | |
| | R4426 | 00D9639006272 | RSD-R1-1WJ-4.7 3*9 P=5MM SMALL R.REEL | | N1131356479205 | 1 | | |
| | R4427 | nsp | 150-J,1/16W-1608REEL | | C20001516M160S | 1 | | |
| | R4428,4429 | nsp | 4.7K-J,1/16W-1608REEL | | C20004726M160S | 2 | | |
| | R4430 | nsp | 180-J,1/16W-1608REEL | | C20001816M160S | 1 | | |
| | R4433 | nsp | 10K-J,1/16W-1608REEL | | C20001036M160S | 1 | | |
| | R4434 | nsp | 100-J,1/16W-1608REEL | | C20001016M160S | 1 | | |
| | R4435 | nsp | 4.7K-J,1/16W-1608REEL | | C20004726M160S | 1 | | |
| | R4436 | nsp | 68K-J,1/16W-1608REEL | | C20006836M160S | 1 | | |
| | R4437 | nsp | 91K-J,1/16W-1608REEL | | C20009136M160S | 1 | | |
| | R4438,4439 | nsp | 10-J,1/16W-1608REEL | | C20001006M160S | 2 | | |
| | R4442-4444 | nsp | 100-J,1/5W-52RE-AX | | C00001016P520S | 3 | | |
| | R4445 | nsp | 10K-J,1/16W-1608REEL | | C20001036M160S | 1 | | |
| | R4446 | nsp | 4.7K-J,1/16W-1608REEL | | C20004726M160S | 1 | | |
| | R4447 | nsp | 150-J,1/16W-1608REEL | | C20001516M160S | 1 | | |
| | R4448 | nsp | 100K-J,1/16W-1608REEL | | C20001046M160S | 1 | | |
| | R4450 | nsp | 47K-J,1/16W-1608REEL | | C20004736M160S | 1 | | |
| | R4451 | nsp | 1K-J,1/16W-1608REEL | | C20001026M160S | 1 | | |
| | R4452 | nsp | 100-J,1/16W-1608REEL | | C20001016M160S | 1 | | |
| | R4453 | nsp | 18K-J,1/16W-1608REEL | | C20001836M160S | 1 | | |
| | R4454 | nsp | 820-J,1/16W-1608REEL | | C20008216M160S | 1 | | |
| | R4455 | nsp | 100-J,1/16W-1608REEL | | C20001016M160S | 1 | | |
| | R4456 | nsp | 3.3K-J,1/16W-1608REEL | | C20003326M160S | 1 | | |
| | R4457-4459 | nsp | 100-J,1/5W-52RE-AX | | C00001016P520S | 3 | | |
| | R4460 | nsp | 2.2K-J,1/16W-1608REEL | | C20002226M160S | 1 | | |
| | R4461 | nsp | 100-J,1/5W-52RE-AX | | C00001016P520S | 1 | | |
| | R4462,4463 | nsp | 560-J,1/16W-1608REEL | | C20005616M160S | 2 | | |
| | R4464 | nsp | 4.7K-J,1/5W-52RE-AX | X2000E1C,E2,E3,K | C00004726P520S | 1 | | |
| | R4466 | nsp | 2.2K-J,1/16W-1608REEL | | C20002226M160S | 1 | | |
| | R4467 | nsp | 100-J,1/16W-1608REEL | | C20001016M160S | 1 | | |
| | R4469 | nsp | 100K-J,1/16W-1608REEL | | C20001046M160S | 1 | | |
| | R4471,4472 | nsp | 4.7K-J,1/5W-52RE-AX | | C00004726P520S | 2 | | |
| | R4473 | nsp | 100K-J,1/16W-1608REEL | | C20001046M160S | 1 | | |
| | R4478 | nsp | 100-J,1/16W-1608REEL | | C20001016M160S | 1 | | |
| | R4479 | nsp | 4.7K-J,1/5W-52RE-AX | X2000E1C,E2,E3,K | C00004726P520S | 1 | | |
| | R4486 | nsp | 2.2K-J,1/16W-1608REEL | | C20002226M160S | 1 | | |
| | R4487,4488 | nsp | 0-J,1/16W-1608REEL | | C20000006M160S | 2 | | |
| | R4489,4490 | nsp | 100-J,1/5W-52RE-AX | X2000E1C,E2,E3,K | C00001016P520S | 2 | | |
| | | | | | | | | |
| **CAPACIITORS GROUP** | | | | | | | | |
| | C4408 | nsp | X7R0.1UF-K/50V-1608REEL | | D0111045771605 | 1 | | |
| | C4409 | 00D2544573981 | 10UF-M/50V,5*11-5RE.SMS SY | | D040100087070S | 1 | | |
| | C4411 | nsp | X7R0.1UF-K/50V-1608REEL | | D011104577160S | 1 | | |
| | C4412 | 00D2544573981 | 10UF-M/50V,5*11-5RE.SMS SY | | D040100087070S | 1 | | |
| | C4413 | nsp | X7R)0.047UF-K/25V-1608REEL | | D011473774161S | 1 | | |
| | C4414 | nsp | X7R0.01UF-K/50V-1608REEL | | D0111037771605 | 1 | | |
| | C4415,4416 | nsp | ST-0.1UF-J/100V-5RE PEFAM104J100 PEF TYPE | | D02010406C060S | 2 | | |
| | C4417 | nsp | 47UF-M/16V,5*11-5RE.SMS SY | | D040470083080S | 1 | | |
| | C4418 | nsp | X7R)0.047UF-K/25V-1608REEL | | D011473774161S | 1 | | |
| | C4419,4420 | nsp | RED-0.1UF-K/250V-5RE PCMT365 | | D02010407H080S | 2 | | |
| | C4421 | 00D9630157900 | 470UF-M/63V,12.5*20 BULK- SHL SY | | D040471088010S | 1 | | |
| | C4422 | 00D9630293602 | 1UF-M/50V,5*11-5RE.SMS SY (Pb Free) | | D040010087150S | 1 | | |
| | C4423 | 00D2544574922 | 100UF-M/50V,8*11.5-5RE.SMS SY | | D040101087060S | 1 | | |
| | C4424 | nsp | X7R)0.047UF-K/25V-1608REEL | | D011473774161S | 1 | | |
| | C4425 | nsp | COG100PF-J/50V-1608REEL | | D010101167160S | 1 | | |
| | C4426 | nsp | Y5V1UF-Z/50V-1608REEL | | D011105597160S | 1 | | |
| | C4427,4428 | nsp | COG100PF-J/50V-1608REEL | | D010101167160S | 2 | | |
| | C4429,4430 | nsp | X7R0.1UF-K/50V-1608REEL | | D011104577160S | 2 | | |
| | C4431,4432 | nsp | ST-0.1UF-J/100V-5RE PEFAM104J100 PEF TYPE | | D02010406C060S | 2 | | |
| | C4433,4434 | 00D9630293602 | 1UF-M/50V,5*11-5RE.SMS SY (Pb Free) | | D040010087150S | 2 | | |
| | C4436 | nsp | X7R)0.047UF-K/25V-1608REEL | | D011473774161S | 1 | | |
| | C4437 | nsp | COG82PF-J/50V-1608REEL | | D010820167160S | 1 | | |
| | C4438 | 00D9630293709 | 100UF-M/10V,5*11-5RE.SMS SY | | D040101082070S | 1 | | |
| | C4439 | 00D2544573981 | 10UF-M/50V,5*11-5RE.SMS SY | | D040100087070S | 1 | | |

| | REF No. | Part No. | Part Name | Remarks | | Q'ty | New | Ver |
|---|---|---|---|---|---|---|---|---|
| | C4440 | nsp | X7R)0.047UF-K/25V-1608REEL | | D011473774161S | 1 | | |
| | C4441,4442 | nsp | COG470PF-J/50V-1608REEL | | D010471167160S | 2 | | |
| | C4443 | nsp | X7R0.1UF-K/50V-1608REEL | | D011104577160S | 1 | | |
| | C4444 | nsp | COG100PF-J/50V-1608REEL | | D010101167160S | 1 | | |
| | C4445 | nsp | COG470PF-J/50V-1608REEL | X2000E1C,E2,E3,K | D010471167160S | 1 | | |
| | C4447 | 00D9630293602 | 1UF-M/50V,5*11-5RE.SMS SY (Pb Free) | | D040010087150S | 1 | | |
| | C4448 | nsp | X7R0.1UF-K/50V-1608REEL | | D011104577160S | 1 | | |
| | C4450 | nsp | COG470PF-J/50V-1608REEL | X2000E1C,E2,E3,K | D010471167160S | 1 | | |
| | C4453 | nsp | COG100PF-J/50V-1608REEL | | D010101167160S | 1 | | |
| | C4455,4456 | nsp | X7R1000PF-K/50V-1608REEL | | D011102777160S | 2 | | |
| | C4459,4460 | nsp | ST-0.01UF-J/100V-5RE PEFAM103J100 PEF TYPE | | D02010306C060S | 2 | | |
| | C4462 | nsp | ST-0.1UF-J/100V-5RE PEFAM104J100 PEF TYPE | | D02010406C060S | 1 | | |
| | C4463 | nsp | ST-0.047UF-J/100V-5RE | | D02047306C060S | 1 | | |
| | C4470 | nsp | X7R0.1UF-K/50V-1608REEL | | D011104577160S | 1 | | |
| | C4471 | nsp | 220UF-M/6.3V,8*5-5RE SRE SY | | D040221081070S | 1 | | |
| | C4472 | nsp | COG 0.001UF-J/50V-1608REEL | | D010102167160S | 1 | | |
| | C4475,4476 | nsp | X7R0.01UF-K/50V-1608REEL | X2000E1C,E2,E3,K | D011103777160S | 2 | | |
| | C4477,4478 | nsp | X7R0.01UF-K/50V-1608REEL | | D011103777160S | 2 | | |
| | C4479 | nsp | X7R0.1UF-K/50V-1608REEL | | D011104577160S | 1 | | |
| | | | | | | | | |
| | **OTHER PARTS GROUP** | | | | | | | |
| | BD4401-4403 | nsp | 0-J,1/16W-1608REEL | | C20000006M160S | 3 | | |
| | BD4407 | nsp | 0-J,1/16W-1608REEL | | C20000006M160S | 1 | | |
| | BD4409,4410 | nsp | 0-J,1/16W-1608REEL | | C20000006M160S | 2 | | |
| | BD4411 | nsp | BLM21PG221SN1 220ohm 2A SMD2012 TYPE | | D340201212210S | 1 | | |
| | BKT4400 | nsp | AVR133(HARMAN) BURRING HOLE SPTE 0.8t/SCREW | | 4010210196100S | 1 | | |
| | CB4400,4401 | nsp | 0-J,1/16W-1608REEL | | C20000006M160S | 2 | | |
| | CLAMP402,403 | nsp | HMX9800(ON)(HAITAI) (W=2.6,L=50)/WIRE(SOLDER) | | 4330000120000S | 2 | | |
| | CLAMP405,406 | nsp | HMX9800(ON)(HAITAI) (W=2.6,L=50)/WIRE(SOLDER) | | 4330000120000S | 2 | | |
| | CN4400 | nsp | 1.0-11S-40PW 40P AN DIP TOP CONTACT | | L130100114050S | 1 | | |
| | CN4402 | nsp | 330MM/5P 20010HS-05=CKM2002HV-05 RD2725#24/28 TUBE | | L002331050150S | 1 | | |
| | CP4400 | nsp | 5268-07A 7P ANGLE | | L102526800700S | 1 | | |
| | CP4401 | nsp | TUC-P07X-B1 BD-TO-BD 7P HOUSING ST (35237-07) | | L101100030710S | 1 | | |
| | CP4402,4403 | nsp | TUC-P07P-B1 BD-TO-BD 7P WAFER ST (35336-07) | | L101100040710S | 2 | | |
| | CP4405 | nsp | TUC-P07X-B1 BD-TO-BD 7P HOUSING ST (35237-07) | | L101100030710S | 1 | | |
| | CP4406 | 963643101610D | USB A F 180 DIP L=15.0 | | G480040000180S | 1 | | |
| ! | F4401 | 963652500020S | 6125FF500-R 500mA FAST-ACTING SUBMINIATURE FUSE | | G657612505030S | 1 | | |
| | FL4400 | 943172100150S | 018BT021GINK 129*25*6.1 GREEN /AVR1913 | | K530180210010S | 1 | | |
| | G4400 | nsp | 160MM/1P 61640-BS=CKM9919T BK1617#22 | | 8410161010120S | 1 | | |
| | J4404,4405 | nsp | JUMPER (0.6/52MM) | | L045084006040S | 2 | | |
| | J4407-4411 | nsp | JUMPER (0.6/52MM) | | L045084006040S | 5 | | |
| | J4413,4414 | nsp | JUMPER (0.6/52MM) | | L045084006040S | 2 | | |
| | J4419,4420 | nsp | JUMPER (0.6/52MM) | | L045084006040S | 2 | | |
| | J4423,4424 | nsp | JUMPER (0.6/52MM) | | L045084006040S | 2 | | |
| | J4426 | nsp | JUMPER (0.6/52MM) | | L045084006040S | 1 | | |
| | J4430-4435 | nsp | JUMPER (0.6/52MM) | | L045084006040S | 6 | | |
| | J4437 | nsp | JUMPER (0.6/52MM) | | L045084006040S | 1 | | |
| | J4443-4456 | nsp | JUMPER (0.6/52MM) | | L045084006040S | 14 | | |
| | J4458 | nsp | 0-J,1/8W-3216REEL | | C200000061300S | 1 | | |
| | J4459 | nsp | JUMPER (0.6/52MM) | | L045084006040S | 1 | | |
| | J4462-4473 | nsp | JUMPER (0.6/52MM) | | L045084006040S | 12 | | |
| | J4474 | nsp | 0-J,1/8W-3216REEL | | C200000061300S | 1 | | |
| | J4475 | nsp | JUMPER (0.6/52MM) | | L045084006040S | 1 | | |
| | J4477-4479 | nsp | JUMPER (0.6/52MM) | | L045084006040S | 3 | | |
| | J4481,4482 | nsp | JUMPER (0.6/52MM) | | L045084006040S | 2 | | |
| | J4484-4491 | nsp | JUMPER (0.6/52MM) | | L045084006040S | 8 | | |
| | J4493,4494 | nsp | JUMPER (0.6/52MM) | | L045084006040S | 2 | | |
| | J4498,4499 | nsp | JUMPER (0.6/52MM) | | L045084006040S | 2 | | |
| | J4501-4505 | nsp | JUMPER (0.6/52MM) | | L045084006040S | 5 | | |
| | J4507-4545 | nsp | JUMPER (0.6/52MM) | | L045084006040S | 39 | | |
| | JACK4400 | 00D9630367802 | EARPHONE JACK(PJ-354H-4)(MIC) BLACK | | G401PJ354H40YS | 1 | | |
| | JACK4401 | 963643101600D | PHONE (YUQIU) D6.5 9P NI PJ-621HA | | G402PJ621HA0YS | 1 | | |
| | JP4401,4402 | nsp | 0-J,1/8W-3216REEL | | C200000061300S | 2 | | |
| | JP4490-4493 | nsp | JUMPER (0.6/52MM) | | L045084006040S | 4 | | |
| | LED4400 | 963262010460S | SIR-341ST3F 3PI 2.5MM INFLARED LED | X2000E3 | K505341300010S | 1 | | |
| | LED4402 | 963263100620D | BL-BUBGJ201G-L 3PI RED/GREEN | | K500032501150S | 1 | | |
| | RMC4400 | 963262010290S | R34FS9A 38KHZ IR REMOCON MODULE P=2.54MM H=15MM | | E940349003810S | 1 | | |
| | SW4400-4409 | 00D9630095305 | SKHV10910D01 KB581/LG 160G | | G180040500010S | 10 | | |
| | SW4410 | 00D9630387408 | EC16B24SO-ZZZ L=25MM CLICK=24 TORQUE=100-300 | | G121162400070S | 1 | | |
| | SW4411 | 00D9630095305 | SKHV10910D01 KB581/LG 160G | | G180040500010S | 1 | | |
| | SW4412 | 00D9630387408 | EC16B24SO-ZZZ L=25MM CLICK=24 TORQUE=100-300 | X2000E1C,E2,E3,K | G121162400070S | 1 | | |

**VIDEO PCB ASS'Y**

**NOTE:** The symbols in the column "Remarks" indicate the following destinations.
E400E3 : U.S.A. & Canada model
X2000E3 : U.S.A. & Canada model X2000E2 : Europe model X2000E1C : China model X2000E1 : Asia model X2000K : Japan model

| | REF No. | Part No. | Part Name | Remarks | | Q'ty | New | Ver |
|---|---|---|---|---|---|---|---|---|
| **SEMICONDUCTORS GROUP** | | | | | | | | |
| | D4210-4212 | 963201500160D | 1N4007 52REEL 1000V 1A | | K000400700220S | 3 | | |
| | IC4701 | 236810090504S | ILX3232D 3V3 RS232 INTERFACE TRANSCEIVER SOP16 | X2000E3 | J046323200020S | 1 | | |
| | IC5000 | 232810005504S | BD7628F-E2 2CH VIDEO AMP SOP8P | | J127762800010S | 1 | | |
| | IC5001 | 963239100770S | TC4051BF SINGLE 8CH MUX/DEMUX SOP16 | | J0404051011105 | 1 | | |
| | IC5003 | 963235100630S | NJM2586AVC3 VIDEO SWITCH SSOP20-C3 | | J171258600020S | 1 | * | |
| | Q4200,4201 | 943214500030S | INC2001AC1 0.2W/SC-59 ISAHAYA | X2000E1C,E2,E3,K | J522020011210S | 2 | | |
| | Q4204 | 943215500020S | RT1P141C 0.2W/SC-59 ISAHAYA | X2000E1C,E2,E3,K | J5201014112105 | 1 | | |
| | Q4205 | 943216500020S | RT1N141C 0.2W/SC-59 ISAHAYA | X2000E1C,E2,E3,K | J5221014112105 | 1 | | |
| | Q4206 | 943215500020S | RT1P141C 0.2W/SC-59 ISAHAYA | X2000E1C,E2,E3,K | J5201014112105 | 1 | | |
| | Q4207 | 943215500020S | RT1P141C 0.2W/SC-59 ISAHAYA | | J5201014112105 | 1 | | |
| | Q4208 | 943216500020S | RT1N141C 0.2W/SC-59 ISAHAYA | | J5221014112105 | 1 | | |
| | Q4209 | 943215500020S | RT1P141C 0.2W/SC-59 ISAHAYA | | J5201014112105 | 1 | | |
| | Q4214 | 943214500030S | INC2001AC1 0.2W/SC-59 ISAHAYA | | J522020011210S | 1 | | |
| | ZD4200 | 963202500290D | ZJ3.6B-0.5W/5MA-52MM SEMTECH | | K06003R644522S | 1 | | |
| | | | | | | | | |
| **RESISTOR GROUP** | | | | | | | | |
| | R4200,4201 | nsp | 220-J,1/16W-1608REEL | X2000E1C,E2,E3,K | C20002216M160S | 2 | | |
| | R4202,4203 | nsp | 100K-J,1/16W-1608REEL | X2000E1C,E2,E3,K | C20001046M160S | 2 | | |
| | R4204 | nsp | 220-J,1/16W-1608REEL | | C20002216M160S | 1 | | |
| | R4212,4213 | nsp | 100K-J,1/16W-1608REEL | X2000E1C,E2,E3,K | C20001046M160S | 2 | | |
| | R4214,4215 | nsp | 100K-J,1/16W-1608REEL | | C20001046M160S | 2 | | |
| | R4222 | nsp | 470-J,1/16W-1608REEL | X2000E1C,E2,E3,K | C20004716M160S | 1 | | |
| | R4223,4224 | nsp | 10K-J,1/16W-1608REEL | X2000E1C,E2,E3,K | C20001036M160S | 2 | | |
| | R4225 | nsp | 470-J,1/16W-1608REEL | X2000E1C,E2,E3,K | C20004716M160S | 1 | | |
| | R4226 | nsp | 10K-J,1/16W-1608REEL | | C20001036M160S | 1 | | |
| | R4227,4228 | nsp | 470-J,1/16W-1608REEL | | C20004716M160S | 2 | | |
| | R4237 | nsp | 470K-J,1/16W-1608REEL | | C20004746M160S | 1 | | |
| | R4238,4239 | nsp | 470-J,1/16W-1608REEL | X2000E1C,E2,E3,K | C20004716M160S | 2 | | |
| | R4240 | nsp | 470K-J,1/16W-1608REEL | X2000E1C,E2,E3,K | C20004746M160S | 1 | | |
| | R4241 | nsp | 1K-J,1/16W-1608REEL | X2000E1C,E2,E3,K | C20001026M160S | 1 | | |
| | R4242,4243 | nsp | 470K-J,1/16W-1608REEL | X2000E1C,E2,E3,K | C20004746M160S | 2 | | |
| | R4258 | nsp | 10K-J,1/16W-1608REEL | X2000E1C,E2,E3,K | C20001036M160S | 1 | | |
| | R4291 | nsp | 820-J,1/16W-1608REEL | | C20008216M160S | 1 | | |
| | R4295,4296 | nsp | 10K-J,1/16W-1608REEL | | C20001036M160S | 2 | | |
| | R4297 | nsp | 1K-J,1/5W-52RE-AX | | C00001026P520S | 1 | | |
| | R4302 | nsp | 470K-J,1/16W-1608REEL | | C20004746M160S | 1 | | |
| | R4708,4709 | nsp | 1K-J,1/16W-1608REEL | X2000E3 | C20001026M160S | 2 | | |
| | R4710 | nsp | 0-J,1/16W-1608REEL | X2000E3 | C20000006M160S | 1 | | |
| | R4711 | nsp | 1K-J,1/16W-1608REEL | X2000E3 | C20001026M160S | 1 | | |
| | R4714 | nsp | 1K-J,1/16W-1608REEL | X2000E3 | C20001026M160S | 1 | | |
| | R5000 | nsp | 820-D,1/16W-1608REEL | | C20008211M160S | 1 | | |
| | R5001 | nsp | 5.6K-J,1/16W-1608REEL | | C20005626M160S | 1 | | |
| | R5003 | nsp | 100-J,1/16W-1608REEL | | C20001016M160S | 1 | | |
| | R5005 | nsp | 10K-J,1/16W-1608REEL | | C20001036M160S | 1 | | |
| | R5006 | nsp | 680-D,1/16W-1608REEL | | C20006811M160S | 1 | | |
| | R5007 | nsp | 75-J,1/16W-1608REEL | | C20007506M160S | 1 | | |
| | R5008-5010 | nsp | 10K-J,1/16W-1608REEL | | C20001036M160S | 3 | | |
| | R5011 | nsp | 75-J,1/16W-1608REEL | | C20007506M160S | 1 | | |
| | R5013,5014 | nsp | 75-J,1/16W-1608REEL | | C20007506M160S | 2 | | |
| | R5016 | nsp | 150-J,1/16W-1608REEL | | C20001516M160S | 1 | | |
| | R5018 | nsp | 160-J,1/16W-1608REEL | | C20001616M160S | 1 | | |
| | R5020 | nsp | 150-J,1/16W-1608REEL | | C20001516M160S | 1 | | |
| | R5022 | nsp | 160-J,1/16W-1608REEL | | C20001616M160S | 1 | | |
| | R5024 | nsp | 150-J,1/16W-1608REEL | | C20001516M160S | 1 | | |
| | R5026 | nsp | 160-J,1/16W-1608REEL | | C20001616M160S | 1 | | |
| | R5033-5035 | nsp | 75-J,1/16W-1608REEL | | C20007506M160S | 3 | | |
| | R5036 | nsp | 10K-J,1/16W-1608REEL | | C20001036M160S | 1 | | |
| | R5069-5071 | nsp | 10K-J,1/16W-1608REEL | | C20001036M160S | 3 | | |
| | | | | | | | | |
| **CAPACIITORS GROUP** | | | | | | | | |
| | C4200,4201 | nsp | COG330PF-J/50V-1608REEL | X2000E1C,E2,E3,K | D010331167160S | 2 | | |
| | C4202,4203 | 00D9630224503 | 22UF-M/50V,5*11-5RE.SMS SY | X2000E1C,E2,E3,K | D040220087060S | 2 | | |
| | C4204 | nsp | COG330PF-J/50V-1608REEL | | D010331167160S | 1 | | |
| | C4205,4206 | 00D9630224503 | 22UF-M/50V,5*11-5RE.SMS SY | | D040220087060S | 2 | | |
| | C4207,4208 | nsp | X7R 0.01UF-K/50V-1608REEL | | D010103777160S | 2 | | |
| | C4220 | 00D9630244606 | 0.1UF-M/50V,5*11-5RE.SMS SY (Pb Free) | X2000E1C,E2,E3,K | D040R10087080S | 1 | | |
| | C4221,4222 | 00D9630224503 | 22UF-M/50V,5*11-5RE.SMS SY | X2000E1C,E2,E3,K | D040220087060S | 2 | | |
| | C4247 | 00D2544573981 | 10UF-M/50V,5*11-5RE.SMS SY | | D040100087070S | 1 | | |
| | C4248 | 00D9630244606 | 0.1UF-M/50V,5*11-5RE.SMS SY (Pb Free) | | D040R10087080S | 1 | | |
| | C4706 | nsp | X7R0.1UF-K/50V-1608REEL | X2000E3 | D011104577160S | 1 | | |
| | C4707 | 00D2544573981 | 10UF-M/50V,5*11-5RE.SMS SY | X2000E3 | D040100087070S | 1 | | |
| | C4711,4712 | nsp | X7R0.1UF-K/50V-1608REEL | X2000E3 | D011104577160S | 2 | | |
| | C4716,4717 | nsp | X7R0.1UF-K/50V-1608REEL | X2000E3 | D011104577160S | 2 | | |
| | C4718,4719 | nsp | COG33PF-J/50V-1608REEL | X2000E3 | D010330167160S | 2 | | |
| | C5000 | 00D9630293709 | 100UF-M/10V,5*11-5RE.SMS SY | | D040101082070S | 1 | | |
| | C5001 | nsp | X7R 0.01UF-K/50V-1608REEL | | D010103777160S | 1 | | |
| | C5002,5003 | 00D9630224503 | 22UF-M/50V,5*11-5RE.SMS SY | | D040220087060S | 2 | | |
| | C5004 | nsp | X7R 0.01UF-K/50V-1608REEL | | D010103777160S | 1 | | |
| | C5006,5007 | nsp | X7R 0.01UF-K/50V-1608REEL | | D010103777160S | 2 | | |
| | C5011 | 00D9630293709 | 100UF-M/10V,5*11-5RE.SMS SY | | D040101082070S | 1 | | |
| | C5012 | nsp | COG68PF-J/50V-1608REEL | | D010680167160S | 1 | | |
| | C5013,5014 | nsp | X7R0.1UF-K/50V-1608REEL | | D011104577160S | 2 | | |
| | C5015,5016 | nsp | COG68PF-J/50V-1608REEL | | D010680167160S | 2 | | |
| | C5017,5018 | 00D9630293602 | 1UF-M/50V,5*11-5RE.SMS SY (Pb Free) | | D040010087150S | 2 | | |
| | C5019,5020 | nsp | X7R0.1UF-K/50V-1608REEL | | D011104577160S | 2 | | |
| | C5021 | 00D9630293602 | 1UF-M/50V,5*11-5RE.SMS SY (Pb Free) | | D040010087150S | 1 | | |
| | C5022 | 00D9630293709 | 100UF-M/10V,5*11-5RE.SMS SY | | D040101082070S | 1 | | |
| | C5048 | 963134502400S | MI-0.1UF-J/50V-5RE | | D020104167050S | 1 | | |
| | C5051 | 963134502400S | MI-0.1UF-J/50V-5RE | | D020104167050S | 1 | | |
| | | | | | | | | |
| **OTHER PARTS GROUP** | | | | | | | | |
| | BKT4702 | nsp | AVR133(HARMAN) BURRING HOLE SPTE 0.8t/SCREW | | 40102101961005 | 1 | | |
| | BKT5001,5002 | nsp | AVR133(HARMAN) BURRING HOLE SPTE 0.8t/SCREW | | 40102101961005 | 2 | | |
| | CLAMP300 | nsp | HMX9800(ON)(HAITAI) (W=2.6,L=50)/WIRE(SOLDER) | | 43300001200005 | 1 | | |
| | CN4002 | nsp | C125Z2-15 15P BtoB SOCKET(FEMALE) P=1.25MM | | L109012521520S | 1 | | |
| | CN4003 | nsp | C125Z2-19 19P BtoB SOCKET(FEMALE) P=1.25MM | | L109012521920S | 1 | | |

| | REF No. | Part No. | Part Name | Remarks | | Q'ty | New | Ver |
|---|---|---|---|---|---|---|---|---|
| | CN4702 | nsp | C125Z2-07 7P BtoB SOCKET(FEMALE) P=1.25MM | X2000E3 | L109012520720S | 1 | | |
| | CN5000,5001 | nsp | C125Z2-13 13P BtoB SOCKET(FEMALE) P=1.25MM | | L109012521320S | 2 | | |
| | CN5003 | nsp | C125Z2-17 17P BtoB SOCKET(FEMALE) P=1.25MM | | L109012521720S | 1 | | |
| | CN5004 | nsp | C125Z2-07 7P BtoB SOCKET(FEMALE) P=1.25MM | | L109012520720S | 1 | | |
| | CP3401 | nsp | C125Z1-13 13P BtoB HEADER(MALE) P=1.25MM | | L109012511320S | 1 | | |
| | CP3404 | nsp | C125Z1-13 13P BtoB HEADER(MALE) P=1.25MM | | L109012511320S | 1 | | |
| | CP4700 | nsp | C125Z1-07 7P BtoB HEADER(MALE) P=1.25MM | X2000E3 | L109012510720S | 1 | | |
| | CP4702 | nsp | C125Z1-07 7P BtoB HEADER(MALE) P=1.25MM | X2000E3 | L109012510720S | 1 | | |
| | CP5000,5001 | nsp | C125Z1-13 13P BtoB HEADER(MALE) P=1.25MM | | L109012511320S | 2 | | |
| | CP5003 | nsp | 5268-08A 8P ANGLE | | L102526808010S | 1 | | |
| | CP5004 | nsp | C125Z1-07 7P BtoB HEADER(MALE) P=1.25MM | | L109012510720S | 1 | | |
| ! | F5001 | 963652010500S | T1.6A/250V-IVBSUCPCcUR S506 | | N751501601160S | 1 | | |
| | F5001A | nsp | PI5.2-REEL | | G6450000500010S | 1 | | |
| | F5001B | nsp | PI5.2-REEL | | G6450000500010S | 1 | | |
| ! | F5002 | 963652010500S | T1.6A/250V-IVBSUCPCcUR S506 | | N751501601160S | 1 | | |
| | F5002A | nsp | PI5.2-REEL | | G6450000500010S | 1 | | |
| | F5002B | nsp | PI5.2-REEL | | G6450000500010S | 1 | | |
| ! | F5003 | 963652010500S | T1.6A/250V-IVBSUCPCcUR S506 | | N751501601160S | 1 | | |
| | F5003A | nsp | PI5.2-REEL | | G6450000500010S | 1 | | |
| | F5003B | nsp | PI5.2-REEL | | G6450000500010S | 1 | | |
| ! | F5004 | 963652010500S | T1.6A/250V-IVBSUCPCcUR S506 | | N751501601160S | 1 | | |
| | F5004A | nsp | PI5.2-REEL | | G6450000500010S | 1 | | |
| | F5004B | nsp | PI5.2-REEL | | G6450000500010S | 1 | | |
| | J5002-5005 | nsp | JUMPER (0.6/52MM) | | L045084006040S | 4 | | |
| | J5007 | nsp | JUMPER (0.6/52MM) | | L045084006040S | 1 | | |
| | J5009-5030 | nsp | JUMPER (0.6/52MM) | | L045084006040S | 22 | | |
| | J5032-5047 | nsp | JUMPER (0.6/52MM) | | L045084006040S | 16 | | |
| | J5049 | nsp | JUMPER (0.6/52MM) | | L045084006040S | 1 | | |
| | J5050 | nsp | JUMPER (0.6/52MM) | X2000E3 | L045084006040S | 1 | | |
| | JACK4702 | 00D2051305008 | 9P FEMALE D-SUB DS03-09 ADD SCREW(4.8*11.8)BLACK | X2000E3 | L103090090030S | 1 | | |
| | JACK5002 | 963643101630D | RCA-303B1-08(GN,BL,RD) | | G606303B1080YS | 1 | | |
| | JACK5004 | 00D9630225803 | RCA-206B-05(RD,WH) | X2000E1C,E2,E3,K | G601206B0500YS | 1 | | |
| | JACK5005 | 00D9630146005 | RCA-107A(BK) | | G600107A0000YS | 1 | | |
| | JACK5006 | 00D9630257004 | RCA-206B-01(YL,YL) | | G601206B0100YS | 1 | | |
| | JP212 | nsp | 0-J,1/8W-3216REEL | | C200000061300S | 1 | | |

**INPUT PCB ASS'Y**

**NOTE:** The symbols in the column "Remarks" indicate the following destinations.
E400E3 : U.S.A. & Canada model
X2000E3 : U.S.A. & Canada model X2000E2 : Europe model X2000E1C : China model X2000E1 : Asia model X2000K : Japan model

| | REF No. | Part No. | Part Name | Remarks | | Q'ty | New | Ver |
|---|---|---|---|---|---|---|---|---|
| **SEMICONDUCTORS GROUP** | | | | | | | | |
| | IC4200 | 963239000650S | R2A15218FP-U00R 8CH-VOL WITH 11 INPUT QFP100P | | J084152180010S | 1 | | |
| | IC4206 | 00D2623727904 | NJW1194V-TE1 2CH-ELECT VOL 4IN-1OUT, TONE SSOP32 | X2000E1C,E2,E3,K | J084119400010S | 1 | | |
| | | | | | | | | |
| **RESISTOR GROUP** | | | | | | | | |
| | R4205-4211 | nsp | 470-J,1/16W-1608REEL | | C20004716M160S | 7 | | |
| | R4216-4221 | nsp | 820K-J,1/16W-1608REEL | | C20008246M160S | 6 | | |
| | R4236 | nsp | 100K-J,1/16W-1608REEL | | C20001046M160S | 1 | | |
| | R4244,4245 | nsp | 470K-J,1/16W-1608REEL | | C20004746M160S | 2 | | |
| | R4248 | nsp | 100-J,1/16W-1608REEL | | C20001016M160S | 1 | | |
| | R4249-4252 | nsp | 470K-J,1/16W-1608REEL | | C20004746M160S | 4 | | |
| | R4257 | nsp | 100-J,1/16W-1608REEL | | C20001016M160S | 1 | | |
| | R4259-4262 | nsp | 100K-J,1/16W-1608REEL | | C20001046M160S | 4 | | |
| | R4263-4270 | nsp | 10K-J,1/16W-1608REEL | | C20001036M160S | 8 | | |
| | R4271-4277 | nsp | 100K-J,1/16W-1608REEL | | C20001046M160S | 7 | | |
| | R4287 | nsp | 100K-J,1/16W-1608REEL | | C20001046M160S | 1 | | |
| | R4288-4290 | nsp | 0-J,1/16W-1608REEL | | C20000006M160S | 3 | | |
| | R4292-4294 | nsp | 0-J,1/16W-1608REEL | | C20000006M160S | 3 | | |
| | R4326 | nsp | 100-J,1/16W-1608REEL | | C20001016M160S | 1 | | |
| | R4332 | nsp | 470K-J,1/16W-1608REEL | | C20004746M160S | 1 | | |
| | R4336 | nsp | 100K-J,1/16W-1608REEL | X2000E1C,E2,E3,K | C20001046M160S | 1 | | |
| | R4341 | nsp | 4.7K-J,1/16W-1608REEL | | C20004726M160S | 1 | | |
| | R4344 | nsp | 100K-J,1/16W-1608REEL | X2000E1C,E2,E3,K | C20001046M160S | 1 | | |
| | R4347 | nsp | 4.7K-J,1/16W-1608REEL | | C20004726M160S | 1 | | |
| | R4348,4349 | nsp | 100K-J,1/16W-1608REEL | X2000E1C,E2,E3,K | C20001046M160S | 2 | | |
| | R4354 | nsp | 0-J,1/16W-1608REEL | | C20000006M160S | 1 | | |
| | R4359 | nsp | 100-J,1/16W-1608REEL | X2000E1C,E2,E3,K | C20001016M160S | 1 | | |
| | R4360 | nsp | 0-J,1/16W-1608REEL | | C20000006M160S | 1 | | |
| | R4363 | nsp | 0-J,1/16W-1608REEL | X400E3 | C20000006M160S | 1 | | |
| | R4364 | nsp | 100-J,1/16W-1608REEL | X2000E1C,E2,E3,K | C20001016M160S | 1 | | |
| | R4367 | nsp | 0-J,1/16W-1608REEL | X400E3 | C20000006M160S | 1 | | |
| | R4370-4376 | nsp | 100-J,1/16W-1608REEL | | C20001016M160S | 7 | | |
| | R4550 | nsp | 470-J,1/16W-1608REEL | | C20004716M160S | 1 | | |
| | R4551,4552 | nsp | 820K-J,1/16W-1608REEL | | C20008246M160S | 2 | | |
| | R4553 | nsp | 470K-J,1/16W-1608REEL | | C20004746M160S | 1 | | |
| | R4554 | nsp | 100K-J,1/16W-1608REEL | | C20001046M160S | 1 | | |
| | | | | | | | | |
| **CAPACIITORS GROUP** | | | | | | | | |
| | C4204 | nsp | COG330PF-J/50V-1608REEL | | D010331167160S | 1 | | |
| | C4209-4211 | nsp | COG330PF-J/50V-1608REEL | | D010331167160S | 3 | | |
| | C4225,4226 | 00D2544573981 | 10UF-M/50V,5*11-5RE.SMS SY | | D040100087070S | 2 | | |
| | C4229,4230 | 963134501890S | 220UF-M/16V,8*11.5-5RE,SMS-SY | | D040221083090S | 2 | | |
| | C4231 | 963134501900S | 100UF-M/25V,6.3*11-5RE RA3-25V101MF3#8P-T2 | | D040101084210S | 1 | | |
| | C4232-4236 | 963134502370S | 47UF-M/16V,5*11-5RE.SMS SY | | D040470083080S | 5 | * | |
| | C4237-4239 | 963134502360S | 47UF-M/63V,8*11.5-5RE,SMS-SY | | D040470088060S | 3 | * | |
| | C4240-4244 | 963134502370S | 47UF-M/16V,5*11-5RE.SMS SY | | D040470083080S | 5 | * | |
| | C4245,4246 | 963134501890S | 220UF-M/16V,8*11.5-5RE,SMS-SY | | D040221083090S | 2 | | |
| | C4269 | 00D2544573981 | 10UF-M/50V,5*11-5RE.SMS SY | | D040100087070S | 1 | | |
| | C4275 | 00D2544573981 | 10UF-M/50V,5*11-5RE.SMS SY | X2000E1C,E2,E3,K | D040100087070S | 1 | | |
| | C4280 | nsp | X7R3300PF-K/50V-1608REEL | X2000E1C,E2,E3,K | D011332777160S | 1 | | |
| | C4281 | nsp | 33UF-M/16V,5*11-5RE SMS SY | X2000E1C,E2,E3,K | D040330083050S | 1 | | |
| | C4282 | nsp | X7R0.1UF-K/50V-1608REEL | X2000E1C,E2,E3,K | D011104577160S | 1 | | |
| | C4283 | 00D2544573981 | 10UF-M/50V,5*11-5RE.SMS SY | X2000E1C,E2,E3,K | D040100087070S | 1 | | |
| | C4284 | 00D9639006476 | 4.7UF-M/50V,5*11-5RE.SMS SY | X2000E1C,E2,E3,K | D0404R7087250S | 1 | | |
| | C4287 | 00D2544573981 | 10UF-M/50V,5*11-5RE.SMS SY | X2000E1C,E2,E3,K | D040100087070S | 1 | | |
| | C4288 | 00D9639006476 | 4.7UF-M/50V,5*11-5RE.SMS SY | X2000E1C,E2,E3,K | D0404R7087250S | 1 | | |
| | C4290 | nsp | X7R0.1UF-K/50V-1608REEL | X2000E1C,E2,E3,K | D011104577160S | 1 | | |
| | C4293 | nsp | 33UF-M/16V,5*11-5RE SMS SY | X2000E1C,E2,E3,K | D040330083050S | 1 | | |
| | C4294 | 00D2544573981 | 10UF-M/50V,5*11-5RE.SMS SY | X2000E1C,E2,E3,K | D040100087070S | 1 | | |
| | C4295 | nsp | X7R3300PF-K/50V-1608REEL | X2000E1C,E2,E3,K | D011332777160S | 1 | | |
| | C4296 | 00D2544573981 | 10UF-M/50V,5*11-5RE.SMS SY | | D040100087070S | 1 | | |
| | C4304 | 00D2544573981 | 10UF-M/50V,5*11-5RE.SMS SY | X2000E1C,E2,E3,K | D040100087070S | 1 | | |
| | C4550-4553 | nsp | COG330PF-J/50V-1608REEL | | D010331167160S | 4 | | |
| | C4554 | nsp | 0-J,1/16W-1608REEL | | C20000006M160S | 1 | | |
| | | | | | | | | |
| **OTHER PARTS GROUP** | | | | | | | | |
| | CN4006 | nsp | C125Z2-11 11P BtoB SOCKET(FEMALE) P=1.25MM | | L109012521120S | 1 | | |
| | CN401 | nsp | 200MM/13P 20010HS-13=CKM2002HV-13 WH1007#26 | | L002201130010S | 1 | | |
| | CN4700 | nsp | C125Z2-07 7P BtoB SOCKET(FEMALE) P=1.25MM | X2000E3 | L109012520720S | 1 | | |
| | CN4703 | nsp | C125Z2-09 9P BtoB SOCKET(FEMALE) P=1.25MM | | L109012520920S | 1 | | |
| | CP4200 | nsp | C125Z1-25 25P BtoB HEADER(MALE) P=1.25MM | | L109012512520S | 1 | | |
| | CP4201 | nsp | C125Z1-31 31P BtoB HEADER(MALE) P=1.25MM | | L109012513120S | 1 | | |
| | CP4203 | nsp | C125Z1-07 7P BtoB HEADER(MALE) P=1.25MM | | L109012510720S | 1 | | |
| | CP4204 | nsp | C125Z1-17 17P BtoB HEADER(MALE) P=1.25MM | | L109012511720S | 1 | | |
| | JACK4201,4202 | 00D9630132103 | RCA-405B-04(WH,WH,RD,RD)-YUQIU | | G602405B0400YS | 2 | | |

**SMPS PCB ASS'Y**

**NOTE:** The symbols in the column "Remarks" indicate the following destinations.
E400E3 : U.S.A. & Canada model
X2000E3 : U.S.A. & Canada model X2000E2 : Europe model X2000E1C : China model X2000E1 : Asia model X2000K : Japan model

| | REF No. | Part No. | Part Name | Remarks | | Q'ty | New | Ver |
|---|---|---|---|---|---|---|---|---|
| **SEMICONDUCTORS GROUP** | | | | | | | | |
| | D4140-4148 | 963201500160D | 1N4007 52REEL 1000V 1A | | K000400700220S | 9 | | |
| | D4149 | 963204500210D | S30SC6MT 60V 30A TO-3P(MTO-3PT) SHINDENGEN | | K120300600010S | 1 | | |
| | D4150 | 00D2760401905 | 1SS133-DO34-AXIAL LRC | | K000013300040S | 1 | | |
| ! | IC4140 | 231010091708S | TOP258MG SDIP10 OFF-LINE POWER SUPPLY IC | | J122258001010S | 1 | | |
| ! | IC4142 | 00D2623047008 | PC123X2YFZ (DIP4P SHARP) | | K614123000010S | 1 | | |
| | IC4143 | 212050010508S | KIA2431AP,0.7W TO-92 | | J126243118010S | 1 | | |
| | TR4140 | 963222500150D | KMB2D0N60SA N-CH MOSFET 60V SOT23 | | J543206005510S | 1 | | |
| | TR4142 | 963213500170D | KTC3198G,0.6W/TO92-REEL | | J5023198G0000S | 1 | | |
| | ZD4147-4149 | 963202500370D | ZJ39B-0.5W/5MA-52MM SEMTECH | E400E3,X2000K,E3 | K06039R044522S | 3 | | |
| | ZD4150-4157 | 963202500350D | ZJ22B-0.5W/5MA-52MM SEMTECH | | K06022R044522S | 8 | | |
| | ZD4158 | 963202500370D | ZJ39B-0.5W/5MA-52MM SEMTECH | | K06039R044522S | 1 | | |
| | ZD4159 | 963202500320D | ZJ5.6B-0.5W/5MA-52MM SEMTECH | | K06005R644522S | 1 | | |
| | ZD4160 | 00D9600095704 | MTZJ6.2B-0.5W/5MA-52MM | E400E3,X2000E3 | K06006R244520S | 1 | | |
| | ZD4160 | 00D2760665903 | MTZJ16B-0.5W/5MA-52MM | X2000E1C,E2 | K06016R044520S | 1 | | |
| | ZD4160 | 00D2760760950 | MTZJ5.6B-0.5W/5MA-52MM | X2000K | K06005R644520S | 1 | | |
| | | | | | | 1 | | |
| **RESISTOR GROUP** | | | | | | 1 | | |
| | R4141,4142 | nsp | 1M-J,1/5W-52RE-AX | | C00001056P520S | 2 | | |
| | R4143 | nsp | 330K-J,1/5W-52RE-AX | | C00003346P520S | 1 | | |
| | R4145 | nsp | 1M-J,1/16W-1608REEL | | C20001056M160S | 1 | | |
| | R4147 | nsp | 270K-J,1/16W-1608REEL | E400E3,X2000K,E3 | C20002746M160S | 1 | | |
| | R4147 | nsp | 56K-J,1/16W-1608REEL | X2000E1C,E2 | C20005636M160S | 1 | | |
| | R4148,4149 | nsp | 2.2M-J,1/5W-52RE-AX | E400E3,X2000K,E3 | C00002256P520S | 2 | | |
| | R4150 | nsp | 1M-J,1/5W-52RE-AX | E400E3,X2000K,E3 | C00001056P520S | 1 | | |
| | R4151 | nsp | 15K-J,1/16W-1608REEL | | C20001536M160S | 1 | | |
| | R4152 | nsp | 1K-J,1/16W-1608REEL | | C20001026M160S | 1 | | |
| | R4153 | nsp | 6.8-J,1/5W-52RE-AX | | C0006R806P520S | 1 | | |
| | R4154 | nsp | 10-J,1/16W-1608REEL | | C20001006M160S | 1 | | |
| | R4155 | nsp | 10K-J,1/16W-1608REEL | | C20001036M160S | 1 | | |
| | R4156 | nsp | 4.7K-J,1/16W-1608REEL | | C20004726M160S | 1 | | |
| | R4157 | nsp | 56-J,1/5W-52RE-AX | | C00005606P520S | 1 | | |
| | R4158 | nsp | 3.3K-J,1/5W-52RE-AX | | C00003326P520S | 1 | | |
| | R4159 | nsp | 5.6K-J,1/5W-52RE-AX | | C00005626P520S | 1 | | |
| | R4160 | nsp | 22K-F,1/16W-1608REEL | | C20002234M161S | 1 | | |
| | R4161 | 00D2472041967 | 6.8K-D,1/16W-1608REEL | | C20006821M160S | 1 | | |
| | R4164 | nsp | 1M-J,1/5W-52RE-AX | | C00001056P520S | 1 | | |
| | | | | | | | | |
| **CAPACIITORS GROUP** | | | | | | | | |
| ! | C4140,4141 | 963134011730S | DE1B3KX471KB4BL01 AC250V BULK MURATA | | D00847127H010S | 2 | | |
| ! | C4142 | 963132011940S | DE2F3KY103MB3BM02 AC250V BULK MURATA | | D008103589010S | 1 | | |
| ! | C4143 | nsp | 0.1UF-K/275V BULK X2 MPX104K3ID2 P=15MM CARLI | | D02110407H010S | 1 | | |
| | C4145-4147 | nsp | X7R)0.1UF-K/25V-1608REEL | | D011104774161S | 3 | | |
| ! | C4148,4149 | 963132011940S | DE2F3KY103MB3BM02 AC250V BULK MURATA | X2000E2,E1C | D008103589010S | 2 | | |
| | C4150 | nsp | X7R)0.1UF-K/25V-1608REEL | | D011104774161S | 1 | | |
| | C4151 | 943134501590S | 100UF-M/200V,16*20 BULK NHA SY | E400E3、X2000K,E3 | D04110108G000S | 1 | | |
| | C4151 | 963134010200S | 100UF-M/400V,18*31.5 BULK NHA SY | X2000E2,E1C | D04110108K000S | 1 | | |
| | C4152 | 963134010210S | 47UF-M/25V,5*11-5RE NXA SY | | D041470084050S | 1 | | |
| | C4153 | 963132010120S | DEHR33A102KB2B | | D00810207Q010S | 1 | | |
| | C4154 | nsp | X7R)0.1UF-K/25V-1608REEL | | D011104774161S | 1 | | |
| | C4155 | 963134010190S | 10UF-M/50V,5*11-5RE NXA SY | | D041100087050S | 1 | | |
| ! | C4156 | 963132011930S | DE1E3KX222MB4BL01 AC250V BULK MURATA | | D00822248H010S | 1 | | |
| | C4159,4160 | nsp | X7R)0.1UF-K/25V-1608REEL | | D011104774161S | 2 | | |
| | C4161 | nsp | X7R)4.7UF-K/6.3V-1608REEL | | D011475571160S | 1 | | |
| | C4162 | 963134010220S | 5600UF-M/6.3V,12.5*35 NXA SY | | D041562081001S | 1 | | |
| | C4164,4165 | 963134010220S | 5600UF-M/6.3V,12.5*35 NXA SY | | D041562081001S | 2 | | |
| | C4166 | nsp | X7R)0.1UF-K/25V-1608REEL | | D011104774161S | 1 | | |
| | | | | | | | | |
| **OTHER PARTS GROUP** | | | | | | | | |
| | BKT4140 | nsp | AVR133(HARMAN) BURRING HOLE SPTE 0.8t/SCREW | X400E3,X2000K,E1C | 40102101961005 | 1 | | |
| | BKT4141 | nsp | AVR133(HARMAN) BURRING HOLE SPTE 0.8t/SCREW | | 40102101961005 | 1 | | |
| | BKT4142 | nsp | AVR3300(E3)(DENON) SPTE 0.8t/SCREW | | 40102101960005 | 1 | | |
| | CN4141 | nsp | 330MM/5P SMH250-05=CKM2509HV-05 WH1007#20 | | L000331050110S | 1 | | |
| ! | CP4140 | nsp | PLUG YW396-03AV 2P | E400E3、X2000K,E1C | L108396030010S | 1 | | |
| | CP4142 | nsp | LWBP1143-02P 7.92MM HEADER,VER,2CKT | | L108011430210S | 1 | | |
| ! | F4140 | 963652010510S | T2A/250V-IVBSUCPCcUR S506 | E400E3,X2000K,E3 | N7515020011160S | 1 | | |
| ! | F4140 | 963652010500S | T1.6A/250V-IVBSUCPCcUR S506 | X2000E1C,E2 | N7515016011160S | 1 | | |
| ! | F4141 | 963652010520S | T6.3A/250V-IVBSUCPCcUR S506 | E400E3,X2000K,E3 | N7515063011160S | 1 | | |
| ! | F4140 | 963652010910S | T3.15A/250V-IVBSUCPCcUR S506 | X2000E1C,E2 | N7515031511160S | 1 | | |
| | FC4140A | nsp | PI5.2-REEL | | G6450000500105 | 1 | | |
| | FC4140B,4141 | nsp | PI5.2-REEL | | G6450000500105 | 2 | | |
| | FC4141B | nsp | PI5.2-REEL | | G6450000500105 | 1 | | |
| | J4145 | nsp | JUMPER (0.6/52MM) | | L045084006040S | 1 | | |
| | J4150 | nsp | JUMPER (0.6/52MM) | | L045084006040S | 1 | | |
| | J4152 | nsp | JUMPER (0.6/52MM) | | L045084006040S | 1 | | |
| | J4154,4155 | nsp | JUMPER (0.6/52MM) | | L045084006040S | 2 | | |
| ! | JK4140 | 963641011240S | AC0152PPA66 AC INLET 2P_REV1.0 CCC | X2000E2,E3 | G4300152P0001S | 1 | | |
| | JP4140,4141 | nsp | JUMPER (0.6/52MM) | | L045084006040S | 2 | | |
| ! | L4140 | 963111100420D | SQ2014 27mH VERTICAL TYPE LINE FILTER | E400E3,X2000K,E3 | D320201405510S | 1 | | |
| ! | L4140 | 963111100470S | SQ2014 50mH VERTICAL TYPE LINE FILTER | X2000E1C,E2 | D320201405000S | 1 | * | |
| ! | RLY4140 | 963682100290D | JZC-36FD/005-HLT 23.8*9.5*24.5mm | | G6800601030305 | 1 | | |
| ! | T4140 | 963102100360S | EER2834 SW TRANSFORMER GAP BONDING | | E060283405530S | 1 | * | |

**7CH_AMP PCB ASS'Y**

**NOTE:** The symbols in the column "Remarks" indicate the following destinations.
E400E3 : U.S.A. & Canada model
X2000E3 : U.S.A. & Canada model X2000E2 : Europe model X2000E1C : China model X2000E1 : Asia model X2000K : Japan model

| | REF No. | Part No. | Part Name | Remarks | | Q'ty | New | Ver |
|---|---|---|---|---|---|---|---|---|
| **SEMICONDUCTORS GROUP** | | | | | | | | |
| | D402 | 00D2760401905 | 1SS133-DO34-AXIAL LRC | | K000013300040S | 1 | | |
| | D403,404 | 00D2760401905 | 1SS133-DO34-AXIAL LRC | E400E3,X2000E3 | K000013300040S | 2 | | |
| | D405,406 | nsp | JUMPER (0.6/52MM) | | L045084006040S | 2 | | |
| | D408 | 00D2760401905 | 1SS133-DO34-AXIAL LRC | | K000013300040S | 1 | | |
| | D409,410 | 00D2760401905 | 1SS133-DO34-AXIAL LRC | E400E3,X2000E3 | K000013300040S | 2 | | |
| | D411,412 | nsp | JUMPER (0.6/52MM) | | L045084006040S | 2 | | |
| | D414 | 00D2760401905 | 1SS133-DO34-AXIAL LRC | | K000013300040S | 1 | | |
| | D415,416 | 00D2760401905 | 1SS133-DO34-AXIAL LRC | E400E3,X2000E3 | K000013300040S | 2 | | |
| | D417,418 | nsp | JUMPER (0.6/52MM) | | L045084006040S | 2 | | |
| | D420 | 00D2760401905 | 1SS133-DO34-AXIAL LRC | | K000013300040S | 1 | | |
| | D421,422 | 00D2760401905 | 1SS133-DO34-AXIAL LRC | E400E3,X2000E3 | K000013300040S | 2 | | |
| | D423,424 | nsp | JUMPER (0.6/52MM) | | L045084006040S | 2 | | |
| | D426 | 00D2760401905 | 1SS133-DO34-AXIAL LRC | | K000013300040S | 1 | | |
| | D427,428 | 00D2760401905 | 1SS133-DO34-AXIAL LRC | E400E3,X2000E3 | K000013300040S | 2 | | |
| | D429,430 | nsp | JUMPER (0.6/52MM) | | L045084006040S | 2 | | |
| | D432 | 00D2760401905 | 1SS133-DO34-AXIAL LRC | | K000013300040S | 1 | | |
| | D433,434 | 00D2760401905 | 1SS133-DO34-AXIAL LRC | E400E3,X2000E3 | K000013300040S | 2 | | |
| | D435,436 | nsp | JUMPER (0.6/52MM) | | L045084006040S | 2 | | |
| | D438 | 00D2760401905 | 1SS133-DO34-AXIAL LRC | | K000013300040S | 1 | | |
| | D439,440 | 00D2760401905 | 1SS133-DO34-AXIAL LRC | E400E3,X2000E3 | K000013300040S | 2 | | |
| | D441,442 | nsp | JUMPER (0.6/52MM) | | L045084006040S | 2 | | |
| | Q401 | 00D2710314903 | KTA1024Y,1W/TO92L-REEL | | J5001024Y0050S | 1 | | |
| | Q403 | 00D2710318909 | 2N5401S 0.35W/SOT-23 REEL | | J5202540100105 | 1 | | |
| | Q405 | 00D2710318909 | 2N5401S 0.35W/SOT-23 REEL | | J5202540100105 | 1 | | |
| | Q406 | 00D2730479909 | 2N5551S 0.35W/SOT-23 REEL | | J5222555100105 | 1 | | |
| | Q407,408 | 00D9600196205 | KSA992F,0.5W/TO92-REEL | | J5000992F0050S | 2 | | |
| | Q412 | 00D2730471907 | KTC3206Y,1W/TO92L-REEL | | J5023206Y0050S | 1 | | |
| | Q413 | 00D2710314903 | KTA1024Y,1W/TO92L-REEL | | J5001024Y0050S | 1 | | |
| | Q415 | 00D2710318909 | 2N5401S 0.35W/SOT-23 REEL | | J5202540100105 | 1 | | |
| | Q417 | 00D9600196205 | KSA992F,0.5W/TO92-REEL | | J5000992F0050S | 1 | | |
| | Q418 | 00D2730479909 | 2N5551S 0.35W/SOT-23 REEL | | J5222555100105 | 1 | | |
| | Q419,420 | 00D9600196205 | KSA992F,0.5W/TO92-REEL | | J5000992F0050S | 2 | | |
| | Q424 | 00D2730471907 | KTC3206Y,1W/TO92L-REEL | | J5023206Y0050S | 1 | | |
| | Q425 | 00D2710314903 | KTA1024Y,1W/TO92L-REEL | | J5001024Y0050S | 1 | | |
| | Q427 | 00D2710318909 | 2N5401S 0.35W/SOT-23 REEL | | J5202540100105 | 1 | | |
| | Q430 | 00D2730479909 | 2N5551S 0.35W/SOT-23 REEL | | J5222555100105 | 1 | | |
| | Q431,432 | 00D9600196205 | KSA992F,0.5W/TO92-REEL | | J5000992F0050S | 2 | | |
| | Q436 | 00D2730471907 | KTC3206Y,1W/TO92L-REEL | | J5023206Y0050S | 1 | | |
| | Q437 | 00D2710314903 | KTA1024Y,1W/TO92L-REEL | | J5001024Y0050S | 1 | | |
| | Q439 | 00D2710318909 | 2N5401S 0.35W/SOT-23 REEL | | J5202540100105 | 1 | | |
| | Q442 | 00D2730479909 | 2N5551S 0.35W/SOT-23 REEL | | J5222555100105 | 1 | | |
| | Q443,444 | 00D9600196205 | KSA992F,0.5W/TO92-REEL | | J5000992F0050S | 2 | | |
| | Q448 | 00D2730471907 | KTC3206Y,1W/TO92L-REEL | | J5023206Y0050S | 1 | | |
| | Q449 | 00D2710314903 | KTA1024Y,1W/TO92L-REEL | | J5001024Y0050S | 1 | | |
| | Q451 | 00D2710318909 | 2N5401S 0.35W/SOT-23 REEL | | J5202540100105 | 1 | | |
| | Q454 | 00D2730479909 | 2N5551S 0.35W/SOT-23 REEL | | J5222555100105 | 1 | | |
| | Q455,456 | 00D9600196205 | KSA992F,0.5W/TO92-REEL | | J5000992F0050S | 2 | | |
| | Q460 | 00D2730471907 | KTC3206Y,1W/TO92L-REEL | | J5023206Y0050S | 1 | | |
| | Q461 | 00D2710314903 | KTA1024Y,1W/TO92L-REEL | | J5001024Y0050S | 1 | | |
| | Q463 | 00D2710318909 | 2N5401S 0.35W/SOT-23 REEL | | J5202540100105 | 1 | | |
| | Q466 | 00D2730479909 | 2N5551S 0.35W/SOT-23 REEL | | J5222555100105 | 1 | | |
| | Q467,468 | 00D9600196205 | KSA992F,0.5W/TO92-REEL | | J5000992F0050S | 2 | | |
| | Q472 | 00D2730471907 | KTC3206Y,1W/TO92L-REEL | | J5023206Y0050S | 1 | | |
| | Q473 | 00D2710314903 | KTA1024Y,1W/TO92L-REEL | | J5001024Y0050S | 1 | | |
| | Q475 | 00D2710318909 | 2N5401S 0.35W/SOT-23 REEL | | J5202540100105 | 1 | | |
| | Q478 | 00D2730479909 | 2N5551S 0.35W/SOT-23 REEL | | J5222555100105 | 1 | | |
| | Q479,480 | 00D9600196205 | KSA992F,0.5W/TO92-REEL | | J5000992F0050S | 2 | | |
| | Q484 | 00D2730471907 | KTC3206Y,1W/TO92L-REEL | | J5023206Y0050S | 1 | | |
| | ZD401 | 963202500300D | ZJ5.1A-0.5W/5MA-52MM SEMTECH | | K06005R134522S | 1 | | |
| | ZD402,403 | 963202500280D | ZJ3.3B-0.5W/5MA-52MM SEMTECH | E400E3,X2000E3 | K06003R344522S | 2 | | |
| | ZD404 | 963202500300D | ZJ5.1A-0.5W/5MA-52MM SEMTECH | | K06005R134522S | 1 | | |
| | ZD405,406 | 963202500280D | ZJ3.3B-0.5W/5MA-52MM SEMTECH | E400E3,X2000E3 | K06003R344522S | 2 | | |
| | ZD407 | 963202500300D | ZJ5.1A-0.5W/5MA-52MM SEMTECH | | K06005R134522S | 1 | | |
| | ZD408,409 | 963202500280D | ZJ3.3B-0.5W/5MA-52MM SEMTECH | E400E3,X2000E3 | K06003R344522S | 2 | | |
| | ZD410 | 963202500300D | ZJ5.1A-0.5W/5MA-52MM SEMTECH | | K06005R134522S | 1 | | |
| | ZD411,412 | 963202500280D | ZJ3.3B-0.5W/5MA-52MM SEMTECH | E400E3,X2000E3 | K06003R344522S | 2 | | |
| | ZD413 | 963202500300D | ZJ5.1A-0.5W/5MA-52MM SEMTECH | | K06005R134522S | 1 | | |
| | ZD414,415 | 963202500280D | ZJ3.3B-0.5W/5MA-52MM SEMTECH | E400E3,X2000E3 | K06003R344522S | 2 | | |
| | ZD416 | 963202500300D | ZJ5.1A-0.5W/5MA-52MM SEMTECH | | K06005R134522S | 1 | | |
| | ZD417,418 | 963202500280D | ZJ3.3B-0.5W/5MA-52MM SEMTECH | E400E3,X2000E3 | K06003R344522S | 2 | | |
| | ZD419 | 963202500300D | ZJ5.1A-0.5W/5MA-52MM SEMTECH | | K06005R134522S | 1 | | |
| | ZD420,421 | 963202500280D | ZJ3.3B-0.5W/5MA-52MM SEMTECH | E400E3,X2000E3 | K06003R344522S | 2 | | |
| | | | | | | | | |
| **RESISTOR GROUP** | | | | | | | | |
| | R401 | 963121006340M | 1.2K-J,1/5W-52RE-AX | | C00001226P520S | 1 | | |
| | R402 | nsp | 100K-J,1/5W-52RE-AX | | C00001046P520S | 1 | | |
| | R404 | nsp | RSD-R0-1WJ-4.7K 3*9 P=5MM SMALL R.REEL | | N113135647230S | 1 | | |
| | R406 | 963252100140D | DHPTHF1608 471P 105T SMD PTC THERMISTOR | | F320471001050S | 1 | | |
| | R407 | nsp | 10K-J,1/16W-1608REEL | | C20001036M160S | 1 | | |
| | R408 | nsp | RSD-R0-1WJ-4.7K 3*9 P=5MM SMALL R.REEL | | N113135647230S | 1 | | |
| | R409 | nsp | 150K-J,1/5W-52RE-AX | | C00001546P520S | 1 | | |
| | R410 | nsp | JUMPER (0.6/52MM) | | L045084006040S | 1 | | |
| | R411 | nsp | 150K-J,1/5W-52RE-AX | X400E3,E3 | C00001546P520S | 1 | | |
| | R411 | nsp | 120K-J,1/5W-52RE-AX | X2000E1C,E2,K | C00001246P520S | 1 | | |
| | R412 | 963121006330M | 47K-J,1/5W-52RE-AX | | C00004736P520S | 1 | | |
| | R413,414 | nsp | 10K-J,1/5W-52RE-AX | | C00001036P520S | 2 | | |
| | R415 | 963125012630S | 22-J,1W-5REEL | | C060022065050S | 1 | | |
| | R416 | nsp | 22K-J,1/5W-52RE-AX | | C00002236P520S | 1 | | |
| | R417 | nsp | 270K-J,1/16W-1608REEL | | C20002746M160S | 1 | | |
| | R419 | nsp | 22K-J,1/5W-52RE-AX | | C00002236P520S | 1 | | |
| | R421 | nsp | 22K-J,1/5W-52RE-AX | | C00002236P520S | 1 | | |
| | R423 | nsp | 10K-J,1/16W-1608REEL | | C20001036M160S | 1 | | |
| | R424,425 | 00D9630345903 | RSD-R1-2WJ-0.47 3.5*8.6 P=5MM SMALL R.REEL | | N113136647820S | 2 | | |
| | R426 | nsp | 5.6K-J,1/16W-1608REEL | | C20005626M160S | 1 | | |
| | R427 | 963121006340M | 1.2K-J,1/5W-52RE-AX | | C00001226P520S | 1 | | |
| | R428 | 00MGD05152160 | 1.5K-J,1/5W-52RE-AX | | C00001526P520S | 1 | | |
| | R429 | 963121006300M | 33K-J,1/5W-52RE-AX | | C00003336P520S | 1 | | |
| | R430,431 | 00D9630345903 | RSD-R1-2WJ-0.47 3.5*8.6 P=5MM SMALL R.REEL | | N113136647820S | 2 | | |
| | R432 | 00D2412399954 | 2.7K-J,1/5W-52RE-AX | | C00002726P520S | 1 | | |
| | R434 | nsp | 3.3K-J,1W-R.REEL | | C060033265050S | 1 | | |
| | R435 | nsp | 560-J,1/5W-52RE-AX | | C00005616P520S | 1 | | |
| | R436 | 963121006310M | 470K-J,1/5W-52RE-AX | | C00004746P520S | 1 | | |
| | R437 | nsp | 22K-J,1/5W-52RE-AX | | C00002236P520S | 1 | | |
| | R438 | 963121006280M | 220-J,1/5W-52RE-AX | | C00002216P520S | 1 | | |
| | R439 | 963125012630S | 22-J,1W-5REEL | | C060022065050S | 1 | | |
| | R440 | nsp | 150-J,1/5W-52RE-AX | | C00001516P520S | 1 | | |

| | REF No. | Part No. | Part Name | Remarks | | Q'ty | New | Ver |
|---|---|---|---|---|---|---|---|---|
| | R441 | nsp | 1.2K-J,1W-5REEL | | C060012265050S | 1 | | |
| | R442 | nsp | JUMPER (0.6/52MM) | | L045084006040S | 1 | | |
| | R443 | nsp | 47-J,1W-R.REEL | | C060047065060S | 1 | | |
| | R444 | 963121006340M | 1.2K-J,1/5W-52RE-AX | | C00001226P520S | 1 | | |
| | R445 | nsp | RSD-R0-1WJ-4.7K 3*9 P=5MM SMALL R.REEL | | N113135647230S | 1 | | |
| | R446 | nsp | 100K-J,1/5W-52RE-AX | | C00001046P520S | 1 | | |
| | R450 | 963252100140D | DHPTHF1608 471P 105T SMD PTC THERMISTOR | | F320471001050S | 1 | | |
| | R451 | nsp | RSD-R0-1WJ-4.7K 3*9 P=5MM SMALL R.REEL | | N113135647230S | 1 | | |
| | R452 | nsp | 150K-J,1/5W-52RE-AX | | C00001546P520S | 1 | | |
| | R453 | nsp | JUMPER (0.6/52MM) | | L045084006040S | 1 | | |
| | R454 | nsp | 150K-J,1/5W-52RE-AX | X400E3,E3 | C00001546P520S | 1 | | |
| | R454 | nsp | 120K-J,1/5W-52RE-AX | X2000E1C,E2,K | C00001246P520S | 1 | | |
| | R455 | 963121006330M | 47K-J,1/5W-52RE-AX | | C00004736P520S | 1 | | |
| | R456,457 | nsp | 10K-J,1/5W-52RE-AX | | C00001036P520S | 2 | | |
| | R458 | 963125012630S | 22-J,1W-5REEL | | C060022065050S | 1 | | |
| | R459 | nsp | 22K-J,1/5W-52RE-AX | | C00002236P520S | 1 | | |
| | R460 | nsp | 270K-J,1/16W-1608REEL | | C20002746M160S | 1 | | |
| | R462 | nsp | 22K-J,1/5W-52RE-AX | | C00002236P520S | 1 | | |
| | R466 | nsp | 10K-J,1/16W-1608REEL | | C20001036M160S | 1 | | |
| | R467,468 | 00D9630345903 | RSD-R1-2WJ-0.47 3.5*8.6 P=5MM SMALL R.REEL | | N113136647820S | 2 | | |
| | R469 | nsp | 5.6K-J,1/16W-1608REEL | | C20005626M160S | 1 | | |
| | R471 | 963121006340M | 1.2K-J,1/5W-52RE-AX | | C00001226P520S | 1 | | |
| | R472 | 00MGD05152160 | 1.5K-J,1/5W-52RE-AX | | C00001526P520S | 1 | | |
| | R473 | 963121006300M | 33K-J,1/5W-52RE-AX | | C00003336P520S | 1 | | |
| | R474,475 | 00D9630345903 | RSD-R1-2WJ-0.47 3.5*8.6 P=5MM SMALL R.REEL | | N113136647820S | 2 | | |
| | R476 | 00D2412399954 | 2.7K-J,1/5W-52RE-AX | | C00002726P520S | 1 | | |
| | R478 | nsp | 3.3K-J,1W-R.REEL | | C060033265050S | 1 | | |
| | R479 | nsp | 560-J,1/5W-52RE-AX | | C00005616P520S | 1 | | |
| | R480 | 963121006310M | 470K-J,1/5W-52RE-AX | | C00004746P520S | 1 | | |
| | R481 | nsp | 22K-J,1/5W-52RE-AX | | C00002236P520S | 1 | | |
| | R482 | 963121006280M | 220-J,1/5W-52RE-AX | | C00002216P520S | 1 | | |
| | R483 | 963125012630S | 22-J,1W-5REEL | | C060022065050S | 1 | | |
| | R484 | nsp | 150-J,1/5W-52RE-AX | | C00001516P520S | 1 | | |
| | R485 | nsp | 1.2K-J,1W-5REEL | | C060012265050S | 1 | | |
| | R486 | nsp | JUMPER (0.6/52MM) | | L045084006040S | 1 | | |
| | R487 | nsp | 47-J,1W-R.REEL | | C060047065060S | 1 | | |
| | R488 | 963121006340M | 1.2K-J,1/5W-52RE-AX | | C00001226P520S | 1 | | |
| | R489 | nsp | RSD-R0-1WJ-4.7K 3*9 P=5MM SMALL R.REEL | | N113135647230S | 1 | | |
| | R490 | nsp | 100K-J,1/5W-52RE-AX | | C00001046P520S | 1 | | |
| | R493 | 00D9630337908 | 33-J,1W-R.REEL | | C060033065050S | 1 | | |
| | R494 | 963252100140D | DHPTHF1608 471P 105T SMD PTC THERMISTOR | | F320471001050S | 1 | | |
| | R495 | nsp | RSD-R0-1WJ-4.7K 3*9 P=5MM SMALL R.REEL | | N113135647230S | 1 | | |
| | R496 | nsp | 150K-J,1/5W-52RE-AX | | C00001546P520S | 1 | | |
| | R497 | nsp | JUMPER (0.6/52MM) | | L045084006040S | 1 | | |
| | R498 | nsp | 150K-J,1/5W-52RE-AX | X400E3,E3 | C00001546P520S | 1 | | |
| | R498 | nsp | 120K-J,1/5W-52RE-AX | X2000E1C,E2,K | C00001246P520S | 1 | | |
| | R499 | 963121006330M | 47K-J,1/5W-52RE-AX | | C00004736P520S | 1 | | |
| | R500,501 | nsp | 10K-J,1/16W-1608REEL | | C20001036M160S | 2 | | |
| | R502 | 963125012630S | 22-J,1W-5REEL | | C060022065050S | 1 | | |
| | R503 | nsp | 22K-J,1/5W-52RE-AX | | C00002236P520S | 1 | | |
| | R504 | nsp | 270K-J,1/16W-1608REEL | | C20002746M160S | 1 | | |
| | R506 | nsp | 22K-J,1/5W-52RE-AX | | C00002236P520S | 1 | | |
| | R507 | nsp | 220K-J,1/5W-52RE-AX | | C00002246P520S | 1 | | |
| | R510 | nsp | 10K-J,1/16W-1608REEL | | C20001036M160S | 1 | | |
| | R511,512 | 00D9630345903 | RSD-R1-2WJ-0.47 3.5*8.6 P=5MM SMALL R.REEL | | N113136647820S | 2 | | |
| | R513 | nsp | 5.6K-J,1/16W-1608REEL | | C20005626M160S | 1 | | |
| | R514 | 963121006340M | 1.2K-J,1/5W-52RE-AX | | C00001226P520S | 1 | | |
| | R515 | 00MGD05152160 | 1.5K-J,1/5W-52RE-AX | | C00001526P520S | 1 | | |
| | R516 | 963121006300M | 33K-J,1/5W-52RE-AX | | C00003336P520S | 1 | | |
| | R517,518 | 00D9630345903 | RSD-R1-2WJ-0.47 3.5*8.6 P=5MM SMALL R.REEL | | N113136647820S | 2 | | |
| | R519 | 00D2412399954 | 2.7K-J,1/5W-52RE-AX | | C00002726P520S | 1 | | |
| | R520 | nsp | 220K-J,1/5W-52RE-AX | | C00002246P520S | 1 | | |
| | R521 | nsp | 3.3K-J,1W-R.REEL | | C060033265050S | 1 | | |
| | R522 | nsp | 560-J,1/5W-52RE-AX | | C00005616P520S | 1 | | |
| | R523 | 963121006310M | 470K-J,1/5W-52RE-AX | | C00004746P520S | 1 | | |
| | R524 | nsp | 22K-J,1/5W-52RE-AX | | C00002236P520S | 1 | | |
| | R525 | 963121006280M | 220-J,1/5W-52RE-AX | | C00002216P520S | 1 | | |
| | R526 | 963125012630S | 22-J,1W-5REEL | | C060022065050S | 1 | | |
| | R527 | nsp | 150-J,1/5W-52RE-AX | | C00001516P520S | 1 | | |
| | R528 | nsp | 1.2K-J,1W-5REEL | | C060012265050S | 1 | | |
| | R529 | nsp | JUMPER (0.6/52MM) | | L045084006040S | 1 | | |
| | R530 | nsp | 47-J,1W-R.REEL | | C060047065060S | 1 | | |
| | R531 | 963121006340M | 1.2K-J,1/5W-52RE-AX | | C00001226P520S | 1 | | |
| | R532 | nsp | 100K-J,1/5W-52RE-AX | | C00001046P520S | 1 | | |
| | R534 | nsp | RSD-R0-1WJ-4.7K 3*9 P=5MM SMALL R.REEL | | N113135647230S | 1 | | |
| | R536 | 963121006340M | 1.2K-J,1/5W-52RE-AX | | C00001226P520S | 1 | | |
| | R537 | 963252100140D | DHPTHF1608 471P 105T SMD PTC THERMISTOR | | F320471001050S | 1 | | |
| | R538 | nsp | RSD-R0-1WJ-4.7K 3*9 P=5MM SMALL R.REEL | | N113135647230S | 1 | | |
| | R539 | nsp | 150K-J,1/5W-52RE-AX | | C00001546P520S | 1 | | |
| | R540 | nsp | JUMPER (0.6/52MM) | | L045084006040S | 1 | | |
| | R541 | nsp | 150K-J,1/5W-52RE-AX | X400E3,E3 | C00001546P520S | 1 | | |
| | R541 | nsp | 120K-J,1/5W-52RE-AX | X2000E1C,E2,K | C00001246P520S | 1 | | |
| | R542 | 963121006330M | 47K-J,1/5W-52RE-AX | | C00004736P520S | 1 | | |
| | R543,544 | nsp | 10K-J,1/5W-52RE-AX | | C00001036P520S | 2 | | |
| | R545 | 963125012630S | 22-J,1W-5REEL | | C060022065050S | 1 | | |
| | R546 | nsp | 22K-J,1/5W-52RE-AX | | C00002236P520S | 1 | | |
| | R547 | nsp | 270K-J,1/16W-1608REEL | | C20002746M160S | 1 | | |
| | R549 | nsp | 22K-J,1/5W-52RE-AX | | C00002236P520S | 1 | | |
| | R551 | 00D9639005639 | 100-J,1W-R.REEL | | C060010165060S | 1 | | |
| | R553 | nsp | 10K-J,1/16W-1608REEL | | C20001036M160S | 1 | | |
| | R554,555 | 00D9630345903 | RSD-R1-2WJ-0.47 3.5*8.6 P=5MM SMALL R.REEL | | N113136647820S | 2 | | |
| | R556 | nsp | 5.6K-J,1/16W-1608REEL | | C20005626M160S | 1 | | |
| | R557 | 963121006340M | 1.2K-J,1/5W-52RE-AX | | C00001226P520S | 1 | | |
| | R558 | 00MGD05152160 | 1.5K-J,1/5W-52RE-AX | | C00001526P520S | 1 | | |
| | R559 | 963121006300M | 33K-J,1/5W-52RE-AX | | C00003336P520S | 1 | | |
| | R560 | 00D2412399954 | 2.7K-J,1/5W-52RE-AX | | C00002726P520S | 1 | | |
| | R561,562 | 00D9630345903 | RSD-R1-2WJ-0.47 3.5*8.6 P=5MM SMALL R.REEL | | N113136647820S | 2 | | |
| | R564 | nsp | 3.3K-J,1W-R.REEL | | C060033265050S | 1 | | |
| | R565 | nsp | 560-J,1/5W-52RE-AX | | C00005616P520S | 1 | | |
| | R566 | 963121006310M | 470K-J,1/5W-52RE-AX | | C00004746P520S | 1 | | |
| | R567 | nsp | 22K-J,1/5W-52RE-AX | | C00002236P520S | 1 | | |
| | R568 | 963121006280M | 220-J,1/5W-52RE-AX | | C00002216P520S | 1 | | |
| | R569 | 963125012630S | 22-J,1W-5REEL | | C060022065050S | 1 | | |
| | R570 | nsp | 150-J,1/5W-52RE-AX | | C00001516P520S | 1 | | |
| | R571 | nsp | 1.2K-J,1W-5REEL | | C060012265050S | 1 | | |
| | R572 | nsp | JUMPER (0.6/52MM) | | L045084006040S | 1 | | |
| | R573 | nsp | 47-J,1W-R.REEL | | C060047065060S | 1 | | |
| | R574 | 963121006340M | 1.2K-J,1/5W-52RE-AX | | C00001226P520S | 1 | | |
| | R575 | nsp | 100K-J,1/5W-52RE-AX | | C00001046P520S | 1 | | |
| | R577 | nsp | RSD-R0-1WJ-4.7K 3*9 P=5MM SMALL R.REEL | | N113135647230S | 1 | | |
| | R580 | 963252100140D | DHPTHF1608 471P 105T SMD PTC THERMISTOR | | F320471001050S | 1 | | |
| | R581 | nsp | RSD-R0-1WJ-4.7K 3*9 P=5MM SMALL R.REEL | | N113135647230S | 1 | | |

| | REF No. | Part No. | Part Name | Remarks | | Q'ty | New | Ver |
|---|---|---|---|---|---|---|---|---|
| | R582 | nsp | 150K-J,1/5W-52RE-AX | | C00001546P520S | 1 | | |
| | R583 | nsp | JUMPER (0.6/52MM) | | L045084006040S | 1 | | |
| | R584 | nsp | 150K-J,1/5W-52RE-AX | X400E3,E3 | C00001546P520S | 1 | | |
| | R584 | nsp | 120K-J,1/5W-52RE-AX | X2000E1C,E2,K | C00001246P520S | 1 | | |
| | R585 | 963121006330M | 47K-J,1/5W-52RE-AX | | C00004736P520S | 1 | | |
| | R586,587 | nsp | 10K-J,1/16W-1608REEL | | C20001036M160S | 2 | | |
| | R588 | 963125012630S | 22-J,1W-5REEL | | C060022065050S | 1 | | |
| | R589 | nsp | 22K-J,1/5W-52RE-AX | | C00002236P520S | 1 | | |
| | R590 | nsp | 270K-J,1/16W-1608REEL | | C20002746M160S | 1 | | |
| | R592 | nsp | 22K-J,1/5W-52RE-AX | | C00002236P520S | 1 | | |
| | R596 | nsp | 10K-J,1/16W-1608REEL | | C20001036M160S | 1 | | |
| | R597,598 | 00D9630345903 | RSD-R1-2WJ-0.47 3.5*8.6 P=5MM SMALL R.REEL | | N113136647820S | 2 | | |
| | R599 | nsp | 5.6K-J,1/16W-1608REEL | | C20005626M160S | 1 | | |
| | R600 | 963121006340M | 1.2K-J,1/5W-52RE-AX | | C00001226P520S | 1 | | |
| | R601 | 00MGD05152160 | 1.5K-J,1/5W-52RE-AX | | C00001526P520S | 1 | | |
| | R602 | 963121006300M | 33K-J,1/5W-52RE-AX | | C00003336P520S | 1 | | |
| | R603,604 | 00D9630345903 | RSD-R1-2WJ-0.47 3.5*8.6 P=5MM SMALL R.REEL | | N113136647820S | 2 | | |
| | R605 | 00D2412399954 | 2.7K-J,1/5W-52RE-AX | | C00002726P520S | 1 | | |
| | R607 | nsp | 3.3K-J,1W-R.REEL | | C060033265050S | 1 | | |
| | R608 | nsp | 560-J,1/5W-52RE-AX | | C00005616P520S | 1 | | |
| | R609 | 963121006310M | 470K-J,1/5W-52RE-AX | | C00004746P520S | 1 | | |
| | R610 | nsp | 22K-J,1/5W-52RE-AX | | C00002236P520S | 1 | | |
| | R611 | 963121006280M | 220-J,1/5W-52RE-AX | | C00002216P520S | 1 | | |
| | R612 | 963125012630S | 22-J,1W-5REEL | | C060022065050S | 1 | | |
| | R613 | nsp | 150-J,1/5W-52RE-AX | | C00001516P520S | 1 | | |
| | R614 | nsp | 1.2K-J,1W-5REEL | | C060012265050S | 1 | | |
| | R615 | nsp | JUMPER (0.6/52MM) | | L045084006040S | 1 | | |
| | R616 | nsp | 47-J,1W-R.REEL | | C060047065060S | 1 | | |
| | R617 | 963121006340M | 1.2K-J,1/5W-52RE-AX | | C00001226P520S | 1 | | |
| | R618 | nsp | 100K-J,1/5W-52RE-AX | | C00001046P520S | 1 | | |
| | R620 | nsp | RSD-R0-1WJ-4.7K 3*9 P=5MM SMALL R.REEL | | N113135647230S | 1 | | |
| | R623 | 963252100140D | DHPTHF1608 471P 105T SMD PTC THERMISTOR | | F320471001050S | 1 | | |
| | R624 | nsp | RSD-R0-1WJ-4.7K 3*9 P=5MM SMALL R.REEL | | N113135647230S | 1 | | |
| | R625 | nsp | 150K-J,1/5W-52RE-AX | | C00001546P520S | 1 | | |
| | R626 | nsp | JUMPER (0.6/52MM) | | L045084006040S | 1 | | |
| | R627 | nsp | 150K-J,1/5W-52RE-AX | X400E3,E3 | C00001546P520S | 1 | | |
| | R627 | nsp | 120K-J,1/5W-52RE-AX | X2000E1C,E2,K | C00001246P520S | 1 | | |
| | R628 | 963121006330M | 47K-J,1/5W-52RE-AX | | C00004736P520S | 1 | | |
| | R629,630 | nsp | 10K-J,1/5W-52RE-AX | | C00001036P520S | 2 | | |
| | R631 | 963125012630S | 22-J,1W-5REEL | | C060022065050S | 1 | | |
| | R632 | nsp | 22K-J,1/5W-52RE-AX | | C00002236P520S | 1 | | |
| | R633 | nsp | 270K-J,1/16W-1608REEL | | C20002746M160S | 1 | | |
| | R635 | nsp | 22K-J,1/5W-52RE-AX | | C00002236P520S | 1 | | |
| | R639 | nsp | 10K-J,1/16W-1608REEL | | C20001036M160S | 1 | | |
| | R640,641 | 00D9630345903 | RSD-R1-2WJ-0.47 3.5*8.6 P=5MM SMALL R.REEL | | N113136647820S | 2 | | |
| | R642 | nsp | 5.6K-J,1/16W-1608REEL | | C20005626M160S | 1 | | |
| | R643 | 963121006340M | 1.2K-J,1/5W-52RE-AX | | C00001226P520S | 1 | | |
| | R644 | 00MGD05152160 | 1.5K-J,1/5W-52RE-AX | | C00001526P520S | 1 | | |
| | R645 | 963121006300M | 33K-J,1/5W-52RE-AX | | C00003336P520S | 1 | | |
| | R646,647 | 00D9630345903 | RSD-R1-2WJ-0.47 3.5*8.6 P=5MM SMALL R.REEL | | N113136647820S | 2 | | |
| | R648 | 00D2412399954 | 2.7K-J,1/5W-52RE-AX | | C00002726P520S | 1 | | |
| | R650 | nsp | 3.3K-J,1W-R.REEL | | C060033265050S | 1 | | |
| | R651 | nsp | 560-J,1/5W-52RE-AX | | C00005616P520S | 1 | | |
| | R652 | 963121006310M | 470K-J,1/5W-52RE-AX | | C00004746P520S | 1 | | |
| | R653 | nsp | 22K-J,1/5W-52RE-AX | | C00002236P520S | 1 | | |
| | R654 | 963121006280M | 220-J,1/5W-52RE-AX | | C00002216P520S | 1 | | |
| | R655 | 963125012630S | 22-J,1W-5REEL | | C060022065050S | 1 | | |
| | R656 | nsp | 150-J,1/5W-52RE-AX | | C00001516P520S | 1 | | |
| | R657 | nsp | 1.2K-J,1W-5REEL | | C060012265050S | 1 | | |
| | R658 | nsp | JUMPER (0.6/52MM) | | L045084006040S | 1 | | |
| | R659 | nsp | 47-J,1W-R.REEL | | C060047065060S | 1 | | |
| | R660 | 963121006340M | 1.2K-J,1/5W-52RE-AX | | C00001226P520S | 1 | | |
| | R661 | nsp | 100K-J,1/5W-52RE-AX | | C00001046P520S | 1 | | |
| | R663 | nsp | RSD-R0-1WJ-4.7K 3*9 P=5MM SMALL R.REEL | | N113135647230S | 1 | | |
| | R666 | 963252100140D | DHPTHF1608 471P 105T SMD PTC THERMISTOR | | F320471001050S | 1 | | |
| | R667 | nsp | RSD-R0-1WJ-4.7K 3*9 P=5MM SMALL R.REEL | | N113135647230S | 1 | | |
| | R668 | nsp | 150K-J,1/5W-52RE-AX | | C00001546P520S | 1 | | |
| | R669 | nsp | JUMPER (0.6/52MM) | | L045084006040S | 1 | | |
| | R670 | nsp | 150K-J,1/5W-52RE-AX | X400E3,E3 | C00001546P520S | 1 | | |
| | R670 | nsp | 120K-J,1/5W-52RE-AX | X2000E1C,E2,K | C00001246P520S | 1 | | |
| | R671 | 963121006330M | 47K-J,1/5W-52RE-AX | | C00004736P520S | 1 | | |
| | R672,673 | nsp | 10K-J,1/5W-52RE-AX | | C00001036P520S | 2 | | |
| | R674 | 963125012630S | 22-J,1W-5REEL | | C060022065050S | 1 | | |
| | R675 | nsp | 22K-J,1/5W-52RE-AX | | C00002236P520S | 1 | | |
| | R676 | nsp | 270K-J,1/16W-1608REEL | | C20002746M160S | 1 | | |
| | R678 | nsp | 22K-J,1/5W-52RE-AX | | C00002236P520S | 1 | | |
| | R682 | nsp | 10K-J,1/16W-1608REEL | | C20001036M160S | 1 | | |
| | R683,684 | 00D9630345903 | RSD-R1-2WJ-0.47 3.5*8.6 P=5MM SMALL R.REEL | | N113136647820S | 2 | | |
| | R685 | nsp | 5.6K-J,1/16W-1608REEL | | C20005626M160S | 1 | | |
| | R686 | 963121006340M | 1.2K-J,1/5W-52RE-AX | | C00001226P520S | 1 | | |
| | R687 | 00MGD05152160 | 1.5K-J,1/5W-52RE-AX | | C00001526P520S | 1 | | |
| | R688 | 963121006300M | 33K-J,1/5W-52RE-AX | | C00003336P520S | 1 | | |
| | R689,690 | 00D9630345903 | RSD-R1-2WJ-0.47 3.5*8.6 P=5MM SMALL R.REEL | | N113136647820S | 2 | | |
| | R691 | 00D2412399954 | 2.7K-J,1/5W-52RE-AX | | C00002726P520S | 1 | | |
| | R693 | nsp | 560-J,1/5W-52RE-AX | | C00005616P520S | 1 | | |
| | R694 | nsp | 3.3K-J,1W-R.REEL | | C060033265050S | 1 | | |
| | R695 | 963121006310M | 470K-J,1/5W-52RE-AX | | C00004746P520S | 1 | | |
| | R696 | nsp | 22K-J,1/5W-52RE-AX | | C00002236P520S | 1 | | |
| | R697 | 963121006280M | 220-J,1/5W-52RE-AX | | C00002216P520S | 1 | | |
| | R698 | 963125012630S | 22-J,1W-5REEL | | C060022065050S | 1 | | |
| | R699 | nsp | 150-J,1/5W-52RE-AX | | C00001516P520S | 1 | | |
| | R700 | nsp | 1.2K-J,1W-5REEL | | C060012265050S | 1 | | |
| | R701 | nsp | JUMPER (0.6/52MM) | | L045084006040S | 1 | | |
| | R702 | nsp | 47-J,1W-R.REEL | | C060047065060S | 1 | | |
| | R703-709 | 963121006340M | 1.2K-J,1/5W-52RE-AX | | C00001226P520S | 7 | | |
| | R710-716 | nsp | JUMPER (0.6/52MM) | | L045084006040S | 7 | | |
| | R717-723 | 963121006280M | 220-J,1/5W-52RE-AX | | C00002216P520S | 7 | | |
| | R731,732 | nsp | 10K-J,1/16W-1608REEL | | C20001036M160S | 2 | | |
| | | | | | | | | |
| **CAPACIITORS GROUP** | | | | | | | | |

| | REF No. | Part No. | Part Name | Remarks | | Q'ty | New | Ver |
|---|---|---|---|---|---|---|---|---|
| | C401 | nsp | X7R0.1UF-K/50V-1608REEL | | D011104577160S | 1 | | |
| | C403 | nsp | X7R 0.01UF-K/50V-1608REEL | | D010103777160S | 1 | | |
| | C404 | 00D9630312402 | 220UF-M/50V,10*12.5 SMS SY (Pb Free) | | D040221087140S | 1 | | |
| | C405 | nsp | COG100PF-J/50V-1608REEL | | D010101167160S | 1 | | |
| | C406 | 9631335015405 | ST-0.00022UF-J/100V-5RE | | D02022106C050S | 1 | * | |
| | C407 | 9631345016605 | 220UF-M/25V,8*11.5-5RE.SMS SY | | D040221084060S | 1 | | |
| | C408 | 00D2544583971 | 47UF-M/50V,8*11.5-5RE ROB-50V470MG3#9-T2 | | D040470087140S | 1 | | |
| | C410 | 9631340018605 | 470UF-M/16V,8*11.5-5RE,SHL-SY | | D040471083080S | 1 | | |
| | C412 | 9631335015505 | ST-0.00047UF-J/100V-5RE (S&A) | | D02047106C060S | 1 | * | |
| | C413 | nsp | X7R2200PF-K/50V-2012REEL | | D011222777200S | 1 | | |
| | C415,416 | 00D9630234302 | 10UF-M/100V,6.3*11-5RE,SMS SY | | D04010008C050S | 2 | | |
| | C418 | nsp | X7R0.1UF-K/50V-1608REEL | | D011104577160S | 1 | | |
| | C419 | 00D9630324005 | 100UF-M/100V,10*16-S.BULK,MHA-SY | | D04010108C240S | 1 | | |
| | C420 | 00D9630312402 | 220UF-M/50V,10*12.5 SMS SY (Pb Free) | | D040221087140S | 1 | | |
| | C421 | nsp | COG100PF-J/50V-1608REEL | | D010101167160S | 1 | | |
| | C422 | 9631335015405 | ST-0.00022UF-J/100V-5RE | | D02022106C050S | 1 | * | |
| | C423 | 9631345016605 | 220UF-M/25V,8*11.5-5RE.SMS SY | | D040221084060S | 1 | | |
| | C424 | 00D2544583971 | 47UF-M/50V,8*11.5-5RE ROB-50V470MG3#9-T2 | | D040470087140S | 1 | | |
| | C426 | 9631340018605 | 470UF-M/16V,8*11.5-5RE,SHL-SY | | D040471083080S | 1 | | |
| | C428 | 9631335015505 | ST-0.00047UF-J/100V-5RE (S&A) | | D02047106C060S | 1 | * | |
| | C429 | nsp | X7R2200PF-K/50V-2012REEL | | D011222777200S | 1 | | |
| | C434 | nsp | X7R0.1UF-K/50V-1608REEL | | D011104577160S | 1 | | |
| | C436 | 00D9630312402 | 220UF-M/50V,10*12.5 SMS SY (Pb Free) | | D040221087140S | 1 | | |
| | C437 | nsp | COG100PF-J/50V-1608REEL | | D010101167160S | 1 | | |
| | C438 | 9631335015405 | ST-0.00022UF-J/100V-5RE | | D02022106C050S | 1 | * | |
| | C439 | 9631345016605 | 220UF-M/25V,8*11.5-5RE.SMS SY | | D040221084060S | 1 | | |
| | C440 | 00D2544583971 | 47UF-M/50V,8*11.5-5RE ROB-50V470MG3#9-T2 | | D040470087140S | 1 | | |
| | C442 | 9631340018605 | 470UF-M/16V,8*11.5-5RE,SHL-SY | | D040471083080S | 1 | | |
| | C444 | 9631335015505 | ST-0.00047UF-J/100V-5RE (S&A) | | D02047106C060S | 1 | * | |
| | C445 | nsp | X7R2200PF-K/50V-2012REEL | | D011222777200S | 1 | | |
| | C450 | nsp | X7R0.1UF-K/50V-1608REEL | | D011104577160S | 1 | | |
| | C452 | 00D2544574922 | 100UF-M/50V,8*11.5-5RE.SMS SY | | D040101087060S | 1 | | |
| | C453 | nsp | COG100PF-J/50V-1608REEL | | D010101167160S | 1 | | |
| | C454 | 9631335015405 | ST-0.00022UF-J/100V-5RE | | D02022106C050S | 1 | * | |
| | C455 | 9631345016605 | 220UF-M/25V,8*11.5-5RE.SMS SY | | D040221084060S | 1 | | |
| | C456 | 00D2544583971 | 47UF-M/50V,8*11.5-5RE ROB-50V470MG3#9-T2 | | D040470087140S | 1 | | |
| | C458 | 9631340018605 | 470UF-M/16V,8*11.5-5RE,SHL-SY | | D040471083080S | 1 | | |
| | C460 | 9631335015505 | ST-0.00047UF-J/100V-5RE (S&A) | | D02047106C060S | 1 | * | |
| | C461 | nsp | X7R2200PF-K/50V-2012REEL | | D011222777200S | 1 | | |
| | C466 | nsp | X7R0.1UF-K/50V-1608REEL | | D011104577160S | 1 | | |
| | C468 | 00D2544574922 | 100UF-M/50V,8*11.5-5RE.SMS SY | | D040101087060S | 1 | | |
| | C469 | nsp | COG100PF-J/50V-1608REEL | | D010101167160S | 1 | | |
| | C470 | 9631335015405 | ST-0.00022UF-J/100V-5RE | | D02022106C050S | 1 | * | |
| | C471 | 9631345016605 | 220UF-M/25V,8*11.5-5RE.SMS SY | | D040221084060S | 1 | | |
| | C472 | 00D2544583971 | 47UF-M/50V,8*11.5-5RE ROB-50V470MG3#9-T2 | | D040470087140S | 1 | | |
| | C474 | 9631340018605 | 470UF-M/16V,8*11.5-5RE,SHL-SY | | D040471083080S | 1 | | |
| | C476 | 9631335015505 | ST-0.00047UF-J/100V-5RE (S&A) | | D02047106C060S | 1 | * | |
| | C477 | nsp | X7R2200PF-K/50V-2012REEL | | D011222777200S | 1 | | |
| | C479,480 | 00D9630234302 | 10UF-M/100V,6.3*11-5RE,SMS SY | | D04010008C050S | 2 | | |
| | C482 | nsp | X7R0.1UF-K/50V-1608REEL | | D011104577160S | 1 | | |
| | C484 | 00D2544574922 | 100UF-M/50V,8*11.5-5RE.SMS SY | | D040101087060S | 1 | | |
| | C485 | nsp | COG100PF-J/50V-1608REEL | | D010101167160S | 1 | | |
| | C486 | 9631335015405 | ST-0.00022UF-J/100V-5RE | | D02022106C050S | 1 | * | |
| | C487 | 9631345016605 | 220UF-M/25V,8*11.5-5RE.SMS SY | | D040221084060S | 1 | | |
| | C488 | 00D2544583971 | 47UF-M/50V,8*11.5-5RE ROB-50V470MG3#9-T2 | | D040470087140S | 1 | | |
| | C490 | 9631340018605 | 470UF-M/16V,8*11.5-5RE,SHL-SY | | D040471083080S | 1 | | |
| | C492 | 9631335015505 | ST-0.00047UF-J/100V-5RE (S&A) | | D02047106C060S | 1 | * | |
| | C493 | nsp | X7R2200PF-K/50V-2012REEL | | D011222777200S | 1 | | |
| | C498 | nsp | X7R0.1UF-K/50V-1608REEL | | D011104577160S | 1 | | |
| | C500 | 00D2544574922 | 100UF-M/50V,8*11.5-5RE.SMS SY | | D040101087060S | 1 | | |
| | C501 | nsp | COG100PF-J/50V-1608REEL | | D010101167160S | 1 | | |
| | C502 | 9631335015405 | ST-0.00022UF-J/100V-5RE | | D02022106C050S | 1 | * | |
| | C503 | 9631345016605 | 220UF-M/25V,8*11.5-5RE.SMS SY | | D040221084060S | 1 | | |
| | C504 | 00D2544583971 | 47UF-M/50V,8*11.5-5RE ROB-50V470MG3#9-T2 | | D040470087140S | 1 | | |
| | C506 | 9631340018605 | 470UF-M/16V,8*11.5-5RE,SHL-SY | | D040471083080S | 1 | | |
| | C508 | 9631335015505 | ST-0.00047UF-J/100V-5RE (S&A) | | D02047106C060S | 1 | * | |
| | C509 | nsp | X7R2200PF-K/50V-2012REEL | | D011222777200S | 1 | | |
| | C511,512 | 00D9630234302 | 10UF-M/100V,6.3*11-5RE,SMS SY | | D04010008C050S | 2 | | |
| | C513,514 | 00D9630338402 | 330UF-M/6.3V,6.3*11-5RE SMS SY | | D040331081050S | 2 | | |
| | C515 | 00D9630324607 | 47UF-M/10V,5*11-5RE SMS SY (Pb Free) | | D040470082060S | 1 | | |
| | | | | | | | | |
| **OTHER PARTS GROUP** | | | | | | | | |
| | BKT400 | nsp | AVR133(HARMAN) BURRING HOLE SPTE 0.8t/SCREW | | 4010210196100S | 1 | | |
| | CN404 | 963612504740D | 170MM/5P 20010HS-05=CKM2002HV-05 YW1007#26 | | L002171050080S | 1 | | |
| | CP401 | nsp | 20010WS-13A00 DIP13P STRAIGHT | | L101200101310S | 1 | | |
| | CP402 | nsp | 5267-05A 5P | | L102526700500S | 1 | | |
| | CP403 | nsp | 20010WS-10A00 DIP10P STRAIGHT | | L101200101010S | 1 | | |
| | CP405 | nsp | 5267-03A 3P | | L102526700300S | 1 | | |
| | G400 | nsp | 60MM/1P B1813T0P-2*2 BK1007#20 | | L000600010050S | 1 | | |
| | G402 | nsp | 60MM/1P B1813T0P-2*2 BK1007#20 | | L000600010050S | 1 | | |
| | J401 | nsp | JUMPER (0.6/52MM) | | L045084006040S | 1 | | |
| | J404-413 | nsp | JUMPER (0.6/52MM) | | L045084006040S | 10 | | |
| | J415 | nsp | JUMPER (0.6/52MM) | | L045084006040S | 1 | | |
| | J417-441 | nsp | JUMPER (0.6/52MM) | | L045084006040S | 25 | | |
| | J443-467 | nsp | JUMPER (0.6/52MM) | | L045084006040S | 25 | | |
| | J469-493 | nsp | JUMPER (0.6/52MM) | | L045084006040S | 25 | | |
| | J495-517 | nsp | JUMPER (0.6/52MM) | | L045084006040S | 23 | | |
| | J519 | nsp | JUMPER (0.6/52MM) | | L045084006040S | 1 | | |
| | J521-534 | nsp | JUMPER (0.6/52MM) | | L045084006040S | 14 | | |
| | J536 | nsp | JUMPER (0.6/52MM) | | L045084006040S | 1 | | |
| | J538 | nsp | JUMPER (0.6/52MM) | | L045084006040S | 1 | | |
| | J540-543 | nsp | JUMPER (0.6/52MM) | | L045084006040S | 4 | | |
| | J545 | nsp | JUMPER (0.6/52MM) | | L045084006040S | 1 | | |
| | J547-557 | nsp | JUMPER (0.6/52MM) | | L045084006040S | 11 | | |
| | J560-571 | nsp | JUMPER (0.6/52MM) | | L045084006040S | 12 | | |
| | J573 | nsp | JUMPER (0.6/52MM) | | L045084006040S | 1 | | |
| | J575-585 | nsp | JUMPER (0.6/52MM) | | L045084006040S | 11 | | |
| | J587,588 | nsp | JUMPER (0.6/52MM) | | L045084006040S | 2 | | |
| | J590 | nsp | JUMPER (0.6/52MM) | | L045084006040S | 1 | | |
| | J592 | nsp | 0-J,1/16W-1608REEL | | C20000006M160S | 1 | | |
| | J598 | nsp | JUMPER (0.6/52MM) | | L045084006040S | 1 | | |
| | JP518 | nsp | JUMPER (0.6/52MM) | | L045084006040S | 1 | | |
| | JP535 | nsp | JUMPER (0.6/52MM) | | L045084006040S | 1 | | |
| | JP537 | nsp | JUMPER (0.6/52MM) | | L045084006040S | 1 | | |
| | JP539 | nsp | JUMPER (0.6/52MM) | | L045084006040S | 1 | | |
| | JP544 | nsp | JUMPER (0.6/52MM) | | L045084006040S | 1 | | |
| | JP558 | nsp | JUMPER (0.6/52MM) | | L045084006040S | 1 | | |
| | JP574 | nsp | JUMPER (0.6/52MM) | | L045084006040S | 1 | | |
| | TP401-407 | nsp | 20010WR-03A00 DIP3P RIGHT ANGLE | | L101200100320S | 7 | | |
| | VR401-407 | 9631610124005 | EVN-DCAA03B13/REEL 1KB | | C541102315000S | 7 | | |

**HDMI PCB ASS'Y**

**NOTE:** The symbols in the column "Remarks" indicate the following destinations.
E400E3 : U.S.A. & Canada model
X2000E3 : U.S.A. & Canada model X2000E2 : Europe model X2000E1C : China model X2000E1 : Asia model X2000K : Japan model

| | REF No. | Part No. | Part Name | Remarks | | Q'ty | New | Ver |
|---|---|---|---|---|---|---|---|---|
| **SEMICONDUCTORS GROUP** | | | | | | | | |
| | D1001 | 963204500220D | LRB521S-30T1G SOD523 SCHOTTKY BARRIER DIODE | | K1255213052305 | 1 | | |
| | D1313 | 963204500220D | LRB521S-30T1G SOD523 SCHOTTKY BARRIER DIODE | | K1255213052305 | 1 | | |
| | D2401 | 00D2760739907 | KDS181S(B)-THICK SOT-23 | | K0050181000405 | 1 | | |
| | D3001 | 963204500220D | LRB521S-30T1G SOD523 SCHOTTKY BARRIER DIODE | X2000E3 | K1255213052305 | 1 | | |
| | D3002 | 963201500170D | LBAS16HT1G FAST SWITCHING SOD-323 | X2000E3 | K0050414802305 | 1 | | |
| | D3006 | 963204500220D | LRB521S-30T1G SOD523 SCHOTTKY BARRIER DIODE | X2000E3 | K1255213052305 | 1 | | |
| | D3007 | 963201500170D | LBAS16HT1G FAST SWITCHING SOD-323 | | K0050414802305 | 1 | | |
| | D3008,3009 | 963204500220D | LRB521S-30T1G SOD523 SCHOTTKY BARRIER DIODE | | K1255213052305 | 2 | | |
| | D3201 | 963201500170D | LBAS16HT1G FAST SWITCHING SOD-323 | | K0050414802305 | 1 | | |
| | D3401 | 963204500220D | LRB521S-30T1G SOD523 SCHOTTKY BARRIER DIODE | | K1255213052305 | 1 | | |
| | D3602 | 963201500170D | LBAS16HT1G FAST SWITCHING SOD-323 | | K0050414802305 | 1 | | |
| | Q1001-1004 | 943216500020S | RT1N141C 0.2W/SC-59 ISAHAYA | | J5221014112105 | 4 | | |
| | Q1005-1008 | 943216500050S | RT1N441C 0.2W/SC-59 ISAHAYA | | J5221041122105 | 4 | | |
| | Q1303-1305 | 943216500020S | RT1N141C 0.2W/SC-59 ISAHAYA | | J5221014112105 | 3 | | |
| | Q1606 | 963223500020D | UPA672T-T1-A SC-88 | | J5436720010105 | 1 | | |
| | Q2202 | 943216500020S | RT1N141C 0.2W/SC-59 ISAHAYA | | J5221014112105 | 1 | | |
| | Q3001 | 943214500020S | 2SC3052 0.15W/SC-59 REEL ISAHAYA | X2000E3 | J5223052000505 | 1 | | |
| | Q3002 | 943215500030S | RT1P441C 0.2W/SC-59 ISAHAYA | X2000E3 | J5201041122105 | 1 | | |
| | Q3201 | 943214500020S | 2SC3052 0.15W/SC-59 REEL ISAHAYA | | J5223052000505 | 1 | | |
| | Q3202 | 963219002180S | 2SD2114KT146W SMT3 SOT23-REEL | | J5232114K0010S | 1 | | |
| | Q3203 | 943214500020S | 2SC3052 0.15W/SC-59 REEL ISAHAYA | | J5223052000505 | 1 | | |
| | Q3204 | 963212500030S | ISA1530AC1 0.2W/SC-59 ISAHAYA | | J5200153012105 | 1 | | |
| | Q3205,3206 | 943214500020S | 2SC3052 0.15W/SC-59 REEL ISAHAYA | | J5223052000505 | 2 | | |
| | Q3207 | 963212500030S | ISA1530AC1 0.2W/SC-59 ISAHAYA | | J5200153012105 | 1 | | |
| | Q3208 | 943214500020S | 2SC3052 0.15W/SC-59 REEL ISAHAYA | | J5223052000505 | 1 | | |
| | Q3209 | 943216500020S | RT1N141C 0.2W/SC-59 ISAHAYA | | J5221014112105 | 1 | | |
| | Q3210 | 943214500020S | 2SC3052 0.15W/SC-59 REEL ISAHAYA | | J5223052000505 | 1 | | |
| | Q3211 | 943216500020S | RT1N141C 0.2W/SC-59 ISAHAYA | | J5221014112105 | 1 | | |
| | Q3212 | 943214500020S | 2SC3052 0.15W/SC-59 REEL ISAHAYA | | J5223052000505 | 1 | | |
| | Q3213-3216 | 943216500020S | RT1N141C 0.2W/SC-59 ISAHAYA | | J5221014112105 | 4 | | |
| | Q3217 | 943214500020S | 2SC3052 0.15W/SC-59 REEL ISAHAYA | | J5223052000505 | 1 | | |
| | Q3218,3219 | 943216500020S | RT1N141C 0.2W/SC-59 ISAHAYA | | J5221014112105 | 2 | | |
| | Q3220 | 943214500020S | 2SC3052 0.15W/SC-59 REEL ISAHAYA | | J5223052000505 | 1 | | |
| | Q3601-3605 | 943216500050S | RT1N441C 0.2W/SC-59 ISAHAYA | | J5221041122105 | 5 | | |
| | Q3606,3607 | 963211500160D | PBSS5140U SOT323 40V LOW VCEsat PNP TR | | J5210514010105 | 2 | | |
| | Q3608-3612 | 963219004200S | FDC608PZ P-CH 2.5V MOSFET SOT6 | | J5436080000105 | 5 | | |
| | Q3613,3614 | 943216500020S | RT1N141C 0.2W/SC-59 ISAHAYA | | J5221014112105 | 2 | | |
| | Q3615-3618 | 963211500160D | PBSS5140U SOT323 40V LOW VCEsat PNP TR | | J5210514010105 | 4 | | |
| | Q3620 | 963211500160D | PBSS5140U SOT323 40V LOW VCEsat PNP TR | | J5210514010105 | 1 | | |
| | Q3621-3624 | 943216500020S | RT1N141C 0.2W/SC-59 ISAHAYA | | J5221014112105 | 4 | | |
| | Q3626 | 943216500020S | RT1N141C 0.2W/SC-59 ISAHAYA | | J5221014112105 | 1 | | |
| | Q3627 | 943214500020S | 2SC3052 0.15W/SC-59 REEL ISAHAYA | | J5223052000505 | 1 | | |
| | Q3629 | 943216500050S | RT1N441C 0.2W/SC-59 ISAHAYA | | J5221041122105 | 1 | | |
| | U1001 | 236810057606S | ADV3002BSTZ 4-TO-1 HDMI SWITCH TQFP80 | | J0403002055105 | 1 | | |
| | U1201 | nsp | AD8195 HDMI/DVI BUFFER EQ LFCSP40 | | J0408195055105 | 1 | | |
| | U1301 | 943239100760S | TC74VHC4051AFT TOSHIBA | | J0407440513605 | 1 | | |
| | U1302 | 963236101220D | ADV7850 HDMI 1.4A RECEIVER BGA425 | | J0407850055105 | 1 | | |
| | U1601 | 963236101320S | ADV8003-3 BGA425 ADV8003KBCZ-8B SINGLE HDMI TX | | J0458003030105 | 1 | | |
| | U1602 | 963248101680S | MX25L12836EMI-10G 128M SERIAL FLASH SOP16 | | 8952400000220 | 1 | * | 2 |
| | U1603 | 963231101500S | NJM2846DL3-18 1.8V TO-252-5 LOW-DROP VOL REGULATOR | | J1262846180105 | 1 | * | |
| | U1801,1802 | nsp | K4T51163QJ-BCE7 512M J-DIE DDR2 SDRAM FBGA84 | | J0014511633705 | 2 | | |
| | U2001 | nsp | ADSP21487KSWZ-3B3018 SHARC PROCESSOR LQFP176 | E400E3 | J0802148755105 | 1 | | |
| | U2001 | nsp | ADSP21487KSWZ-3B3017 SHARC PROCESSOR LQFP176 | X2000E1C,E2,E3,K | J0802148755205 | 1 | | |
| | U2002 | 943246012690S | W9864G6JH-6 1M*4BANKS*16BIT(64MB) TSOP54 | | J0019864660105 | 1 | | |
| | U2003 | 963248101700S | MX29LV160DBTI-70G 16M(2M*8/1M*16)3V TSOP48 | | 8952400000240 | 1 | * | |
| | U2201 | 963239101100S | BCR-802-M25 25MBPS OPTICAL RECEIVER INTERFACE | | E100802000250 | 1 | * | |
| | U2202 | 963239101100S | BCR-802-M25 25MBPS OPTICAL RECEIVER INTERFACE | X2000E1C,E2,K | E100802000250 | 1 | * | |
| | U2203 | 23681014050AS | PCM9211 TRANSCEIVER LQFP48 | | J0469211000105 | 1 | | |
| | U2204 | 00D2623077900 | TC74VHCU04FT HEX INVERTER TSSOP14 | E400E3,X2000E3 | J0407404055805 | 1 | | |
| | U2205 | 963243101540S | 5M80ZT100C5N TQFP100 | | 8952400000230 | 1 | * | |
| | U2207 | 963239002150S | SN74LVC244APWR TSSOP 20P/OCTAL BUFFER/DRIVER | | J0407424402305 | 1 | | |
| | U2401 | 943239100690S | PCM5100 TSSOP20 AUDIO STEREO DAC | | J0425100055105 | 1 | | |
| | U2402,2403 | 943239010400S | I.C, REGULATOR(3.3V/TO-252) | | J1262845330105 | 2 | | |
| | U2404 | nsp | PCM1690 HTSSOP48 | | J0421690000105 | 1 | | |
| | U2406-2409 | 963232100390S | NJM8080G SOP8 DUAL OP AMP | | J1218080000105 | 4 | * | |
| | U2602 | 23681011260AS | DM860A NETWORKED MEDIA PROCESSOR LFBGA320 | | J080860A05510S | 1 | | |
| | U2603 | 963248101710S | H27U1G8F2BTR 1Gbit NAND FLASH TSOP48 TSI | | 8952400000250 | 1 | * | 2 |
| | U2604,2605 | 963246100740D | A3V56S30FTP-G6 256Mb SDRAM TSOP54 | | J0010305636005 | 2 | | |
| | U2802 | nsp | LAN8720A ETHERNET TRANSCEIVER QFN24 SMSC | | J1278720055105 | 1 | | |
| | U2805 | nsp | MFI337S3959 COPROCESSOR(IPOD) DENON SAGUB | | J0443373959105 | 1 | | |
| | U2806 | nsp | NCP380HMU15AATBG UDFN6 | | J1273801500105 | 1 | | |
| | U3002 | 963243101520S | R5F56108VNFP 32BIT MICROCOMPUTER P-LQFP144 RENESAS | | 8952400000210 | 1 | * | 2 |
| | U3003 | 943239100720S | R1EX24256BSAS0A 256Kbit SERIAL SOP8 RENESAS | | J0002425655705 | 1 | | |
| | U3202 | 00D2623676903 | TC74VHCT08AFTS1-TBB TSSOP14P QUAD 2-INPUT AND GATE | | J0407408003505 | 1 | | |
| | U3203 | 00D2623444902 | TC74VHC08FT CMOS 2-INPUT AND GATE TSSOP14 P-0.65 | E400E3,X2000E1C,E2,K | J0407408002805 | 1 | | |
| | U3601-3605 | nsp | EX3AV 3A VOL DC-DC CONVERTER QFN38 | | J0480300300105 | 5 | | |
| | U3608 | 943239100730S | PST8448UR SYSTEM RESET SC-82AB MITSUMI | | J1258448000105 | 1 | | |
| | | | | | | | | |
| **RESISTOR GROUP** | | | | | | | | |
| | R1001-1004 | nsp | 1K-J,1/16W-1005REEL | | C20001026M101S | 4 | | |
| | R1005-1008 | nsp | 10K-J,1/16W-1005REEL | | C20001036M111S | 4 | | |
| | R1009-1012 | nsp | 47K-J,1/16W-1005REEL | | C20004736M101S | 4 | | |
| | R1017,1018 | nsp | 2.2K-J,1/16W-1005REEL | | C20002226M101S | 2 | | |
| | R1019-1021 | nsp | 10K-J,1/16W-1005REEL | | C20001036M111S | 3 | | |
| | R1024-1032 | nsp | 4.7K-J,1/16W-1005REEL | | C20004726M101S | 9 | | |
| | R1033,1034 | nsp | 33-J,1/16W-1005REEL | | C20003306M101S | 2 | | |
| | R1036 | nsp | 1K-J,1/16W-1005REEL | | C20001026M101S | 1 | | |
| | R1037 | nsp | 10K-J,1/16W-1005REEL | | C20001036M111S | 1 | | |
| | R1039 | nsp | 10K-J,1/16W-1005REEL | | C20001036M111S | 1 | | |
| | R1041 | nsp | 10K-J,1/16W-1005REEL | | C20001036M111S | 1 | | |
| | R1043 | nsp | 10K-J,1/16W-1005REEL | | C20001036M111S | 1 | | |
| | R1045 | nsp | 10K-J,1/16W-1005REEL | | C20001036M111S | 1 | | |
| | R1202 | nsp | 0-J,1/16W-1005REEL | | C20000006M101S | 1 | | |
| | R1204 | nsp | 0-J,1/16W-1005REEL | | C20000006M101S | 1 | | |
| | R1205 | nsp | 47K-J,1/16W-1005REEL | | C20004736M101S | 1 | | |
| | R1207,1208 | nsp | 0-J,1/16W-1005REEL | | C20000006M101S | 2 | | |
| | R1210,1211 | nsp | 2.2K-J,1/16W-1005REEL | | C20002226M101S | 2 | | |
| | R1212,1213 | nsp | 0-J,1/16W-1005REEL | | C20000006M101S | 2 | | |
| | R1217 | nsp | 0-J,1/16W-1005REEL | | C20000006M101S | 1 | | |
| | R1303 | nsp | 0-J,1/16W-1005REEL | | C20000006M101S | 1 | | |
| | R1306-1309 | nsp | 24-J,1/16W-1608REEL | | C20002406M160S | 4 | | |
| | R1311,1312 | nsp | 0-J,1/16W-1005REEL | | C20000006M101S | 2 | | |
| | R1313 | nsp | 2.2K-J,1/16W-1005REEL | | C20002226M101S | 1 | | |
| | R1314,1315 | nsp | 51-J,1/16W-1608REEL | | C20005106M160S | 2 | | |

**NOTE** :
When you replaced, please update to the latest version of each region.

| | REF No. | Part No. | Part Name | Remarks | | Q'ty | New | Ver |
|---|---|---|---|---|---|---|---|---|
| | R1317 | nsp | 0-J,1/16W-1005REEL | | C20000006M101S | 1 | | |
| | R1318 | nsp | 3.3K-J,1/16W-1005REEL | | C20003326M101S | 1 | | |
| | R1319,1320 | nsp | 51-J,1/16W-1608REEL | | C20005106M160S | 2 | | |
| | R1323 | nsp | 680-J,1/16W-1005REEL | | C20006816M101S | 1 | | |
| | R1325 | nsp | 0-J,1/16W-1005REEL | X2000E1C,E2,E3,K | C20000006M101S | 1 | | |
| | R1329 | nsp | 47K-J,1/16W-1005REEL | | C20004736M101S | 1 | | |
| | R1331 | nsp | 4.7K-J,1/16W-1005REEL | | C20004726M101S | 1 | | |
| | R1333 | nsp | 680-J,1/16W-1005REEL | | C20006816M101S | 1 | | |
| | R1334,1335 | nsp | 4.7K-J,1/16W-1005REEL | | C20004726M101S | 2 | | |
| | R1336,1337 | nsp | 2.2K-J,1/16W-1005REEL | | C20002226M101S | 2 | | |
| | R1338 | nsp | 1K-J,1/16W-1005REEL | | C20001026M101S | 1 | | |
| | R1339,1340 | nsp | 4.7K-J,1/16W-1005REEL | | C20004726M101S | 2 | | |
| | R1342-1344 | nsp | 47K-J,1/16W-1005REEL | | C20004736M101S | 3 | | |
| | R1345 | nsp | 2.2K-J,1/16W-1005REEL | | C20002226M101S | 1 | | |
| | R1346 | nsp | 0-J,1/16W-1608REEL | | C20000006M160S | 1 | | |
| | R1350 | nsp | 0-J,1/10W-2012REEL | | C200000060200S | 1 | | |
| | R1352 | nsp | 470-D,1/16W-1608REEL | | C20004711M160S | 1 | | |
| | R1360 | nsp | 4.7K-J,1/16W-1005REEL | | C20004726M101S | 1 | | |
| | R1361 | nsp | 47K-J,1/16W-1005REEL | X2000E1C,E2,E3,K | C20004736M101S | 1 | | |
| | R1363 | nsp | 680-J,1/16W-1005REEL | X2000E1C,E2,E3,K | C20006816M101S | 1 | | |
| | R1368 | nsp | 0-J,1/16W-1005REEL | X2000E1C,E2,E3,K | C20000006M101S | 1 | | |
| | R1369,1370 | nsp | 4.7K-J,1/16W-1005REEL | | C20004726M101S | 2 | | |
| | R1401,1402 | nsp | 10-J 1/16W SMD(1005)*4 WA04X | | C1801000421 00S | 2 | | |
| | R1403,1404 | nsp | 47-J 1/16W SMD(1005)*4 WA04X | | C1804700421 00S | 2 | | |
| | R1407-1409 | nsp | 4.7K-J 1/16W SMD(1005)*4 WA04X | | C1804720421 00S | 3 | | |
| | R1410-1412 | nsp | 47K-J 1/16W SMD(1005)*4 WA04X | | C1804734021 00S | 3 | | |
| | R1413-1417 | nsp | 4.7K-J 1/16W SMD(1005)*4 WA04X | | C1804720421 00S | 5 | | |
| | R1418 | nsp | 10K-J,1/16W-1005REEL | E400E3 | C20001036M111S | 1 | | |
| | R1419 | nsp | 10K-J,1/16W-1005REEL | | C20001036M111S | 1 | | |
| | R1617,1618 | nsp | 1K-D,1/16W-1608REEL | | C20001021M160S | 2 | | |
| | R1619,1620 | nsp | 470-D,1/16W-1608REEL | | C20004711M160S | 2 | | |
| | R1622 | nsp | 4.7K-J,1/16W-1005REEL | | C20004726M101S | 1 | | |
| | R1623 | nsp | 1.3K-J,1/16W-1608REEL | | C20001326M160S | 1 | | |
| | R1624 | nsp | 2.2K-J,1/16W-1608REEL | | C20002226M160S | 1 | | |
| | R1628 | nsp | 2.7K-F,1/16W-1608REEL | | C20002724M161S | 1 | | |
| | R1629 | nsp | 180-F,1/16W-1608REEL | | C20001814M161S | 1 | | |
| | R1630 | nsp | 2.7K-F,1/16W-1608REEL | | C20002724M161S | 1 | | |
| | R1631 | nsp | 180-F,1/16W-1608REEL | | C20001814M161S | 1 | | |
| | R1632 | nsp | 33-J,1/16W-1005REEL | | C20003306M101S | 1 | | |
| | R1636 | nsp | 10K-J,1/16W-1005REEL | | C20001036M111S | 1 | | |
| | R1637,1638 | nsp | 10K-J,1/16W-1608REEL | | C20001036M160S | 2 | | |
| | R1639 | nsp | 1K-J,1/16W-1005REEL | | C20001026M101S | 1 | | |
| | R1640 | nsp | 4.7K-J,1/16W-1005REEL | | C20004726M101S | 1 | | |
| | R1641 | nsp | 1.8K-J,1/16W-1005REEL | | C20001826M101S | 1 | | |
| | R1645,1646 | nsp | 33-J,1/16W-1005REEL | | C20003306M101S | 2 | | |
| | R1647 | nsp | 0-J,1/16W-1005REEL | | C20000006M101S | 1 | | |
| | R1648 | nsp | 1.8K-J,1/16W-1005REEL | | C20001826M101S | 1 | | |
| | R1649-1652 | nsp | 0-J,1/16W-1005REEL | | C20000006M101S | 4 | | |
| | R1653 | nsp | 10K-J,1/16W-1005REEL | | C20001036M111S | 1 | | |
| | R1654 | nsp | 5.1-J,1/16W-1005REEL | | C2005R106M101S | 1 | | |
| | R1657 | nsp | 10K-J,1/16W-1005REEL | | C20001036M111S | 1 | | |
| | R1658 | nsp | 33-J,1/16W-1005REEL | | C20003306M101S | 1 | | |
| | R1659 | nsp | 0-J,1/16W-1005REEL | | C20000006M101S | 1 | | |
| | R1660 | nsp | 10-J 1/16W SMD(1005)*4 WA04X | | C1801000421 00S | 1 | | |
| | R1661 | nsp | 0-J,1/16W-1005REEL | | C20000006M101S | 1 | | |
| | R1662 | nsp | 56-J,1/16W-1005REEL | | C20005606M101S | 1 | | |
| | R1663-1665 | nsp | 47-J,1/16W-1005REEL | | C20004706M101S | 3 | | |
| | R1667-1670 | nsp | 47-J,1/16W-1005REEL | | C20004706M101S | 4 | | |
| | R1673 | nsp | 47-J 1/16W SMD(1005)*4 WA04X | | C1804700421 00S | 1 | | |
| | R1675-1679 | nsp | 47-J 1/16W SMD(1005)*4 WA04X | | C1804700421 00S | 5 | | |
| | R1680 | nsp | 33-J 1/16W SMD(1005)*4 WA04X | | C1803300421 00S | 1 | | |
| | R1681-1689 | nsp | 47-J 1/16W SMD(1005)*4 WA04X | | C1804700421 00S | 9 | | |
| | R1690 | nsp | 33-J 1/16W SMD(1005)*4 WA04X | | C1803300421 00S | 1 | | |
| | R1691-1694 | nsp | 4.7K-J 1/16W SMD(1005)*4 WA04X | | C1804720421 00S | 4 | | |
| | R1695 | nsp | 56-J,1/16W-1005REEL | | C20005606M101S | 1 | | |
| | R1696-1698 | nsp | 33-J 1/16W SMD(1005)*4 WA04X | | C1803300421 00S | 3 | | |
| | R1699,1700 | nsp | 51-D,1/16W-1608REEL | | C20005101M160S | 2 | | |
| | R1702-1706 | nsp | 33-J 1/16W SMD(1005)*4 WA04X | | C1803300421 00S | 5 | | |
| | R1707 | nsp | 10K-J*4 1/16W SMD(1005) WA04 | | C1801030421 00S | 1 | | |
| | R1715 | nsp | 0-J,1/16W-1005REEL | | C20000006M101S | 1 | | |
| | R1717-1728 | nsp | 0-J,1/16W-1005REEL | | C20000006M101S | 12 | | |
| | R1729 | nsp | 10K-J,1/16W-1005REEL | | C20001036M111S | 1 | | |
| | R1730-1734 | nsp | 0-J,1/16W-1005REEL | | C20000006M101S | 5 | | |
| | R1818,1819 | nsp | 1K-D,1/16W-1608REEL | | C20001021M160S | 2 | | |
| | R1820,1821 | nsp | 10K-J,1/16W-1005REEL | | C20001036M111S | 2 | | |
| | R2003 | nsp | 10K-J,1/16W-1005REEL | | C20001036M111S | 1 | | |
| | R2004 | nsp | 1K-J,1/16W-1005REEL | | C20001026M101S | 1 | | |
| | R2006 | nsp | 4.7K-J,1/16W-1005REEL | | C20004726M101S | 1 | | |
| | R2008 | nsp | 10K-J,1/16W-1005REEL | | C20001036M111S | 1 | | |
| | R2011 | nsp | 47-J,1/16W-1005REEL | | C20004706M101S | 1 | | |
| | R2012 | nsp | 4.7K-J,1/16W-1005REEL | | C20004726M101S | 1 | | |
| | R2014,2015 | nsp | 4.7K-J,1/16W-1005REEL | | C20004726M101S | 2 | | |
| | R2016,2017 | nsp | 33-J,1/16W-1005REEL | | C20003306M101S | 2 | | |
| | R2018 | nsp | 10-J,1/16W-1005REEL | | C20001006M101S | 1 | | |
| | R2019 | nsp | 10K-J,1/16W-1005REEL | | C20001036M111S | 1 | | |
| | R2020 | nsp | 33-J,1/16W-1005REEL | | C20003306M101S | 1 | | |
| | R2021 | nsp | 1M-J,1/16W-1005REEL | | C20001056M101S | 1 | | |
| | R2022 | nsp | 47-J,1/16W-1005REEL | | C20004706M101S | 1 | | |
| | R2023 | nsp | 10K-J,1/16W-1005REEL | | C20001036M111S | 1 | | |
| | R2024,2025 | nsp | 0-J,1/16W-1005REEL | | C20000006M101S | 2 | | |
| | R2026 | nsp | 10K-J,1/16W-1005REEL | | C20001036M111S | 1 | | |
| | R2027 | nsp | 33-J,1/16W-1005REEL | | C20003306M101S | 1 | | |
| | R2028 | nsp | 10K-J,1/16W-1005REEL | | C20001036M111S | 1 | | |
| | R2030 | nsp | 10K-J,1/16W-1005REEL | | C20001036M111S | 1 | | |
| | R2031 | nsp | 33-J,1/16W-1005REEL | | C20003306M101S | 1 | | |
| | R2032 | nsp | 10K-J,1/16W-1005REEL | | C20001036M111S | 1 | | |
| | R2033 | nsp | 33-J,1/16W-1005REEL | | C20003306M101S | 1 | | |
| | R2035 | nsp | 33-J,1/16W-1005REEL | | C20003306M101S | 1 | | |
| | R2037 | nsp | 4.7K-J,1/16W-1005REEL | | C20004726M101S | 1 | | |
| | R2039 | nsp | 10K-J,1/16W-1005REEL | | C20001036M111S | 1 | | |
| | R2040 | nsp | 0-J,1/16W-1005REEL | | C20000006M101S | 1 | | |
| | R2041 | nsp | 10K-J,1/16W-1005REEL | | C20001036M111S | 1 | | |
| | R2043 | nsp | 10K-J,1/16W-1005REEL | | C20001036M111S | 1 | | |
| | R2044 | nsp | 0-J,1/16W-1005REEL | | C20000006M101S | 1 | | |
| | R2045 | nsp | 10K-J,1/16W-1005REEL | | C20001036M111S | 1 | | |
| | R2046 | nsp | 0-J,1/16W-1005REEL | | C20000006M101S | 1 | | |
| | R2048,2049 | nsp | 4.7K-J,1/16W-1005REEL | | C20004726M101S | 2 | | |
| | R2050 | nsp | 33-J,1/16W-1005REEL | | C20003306M101S | 1 | | |
| | R2101 | nsp | 33-J 1/16W SMD(1005)*4 WA04X | | C1803300421 00S | 1 | | |
| | R2103-2106 | nsp | 10-J 1/16W SMD(1005)*4 WA04X | | C1801000421 00S | 4 | | |

| | REF No. | Part No. | Part Name | Remarks | | Q'ty | New | Ver |
|---|---|---|---|---|---|---|---|---|
| | R2107-2112 | nsp | 33-J 1/16W SMD(1005)*4 WA04X | | C1803300421005 | 6 | | |
| | R2113-2118 | nsp | 10K-J*4 1/16W SMD(1005) WA04 | | C1801030421005 | 6 | | |
| | R2119,2120 | nsp | 33-J 1/16W SMD(1005)*4 WA04X | | C1803300421005 | 2 | | |
| | R2202 | nsp | 33-J,1/16W-1005REEL | | C20003306M101S | 1 | | |
| | R2203 | nsp | 33-J,1/16W-1005REEL | X2000E1C,E2,K | C20003306M101S | 1 | | |
| | R2205 | nsp | 150-J,1/16W-1005REEL | E400E3,X2000E3 | C20001516M101S | 1 | | |
| | R2207 | nsp | 150-J,1/16W-1005REEL | E400E3,X2000E3 | C20001516M101S | 1 | | |
| | R2208 | nsp | 3.3K-J,1/16W-1005REEL | | C20003326M101S | 1 | | |
| | R2209 | nsp | 33-J,1/16W-1005REEL | | C20003306M101S | 1 | | |
| | R2211 | nsp | 470-J,1/16W-1005REEL | E400E3,X2000E3 | C20004716M101S | 1 | | |
| | R2213 | nsp | 0-J,1/16W-1005REEL | | C20000006M101S | 1 | | |
| | R2216 | nsp | 47K-J,1/16W-1005REEL | E400E3,X2000E3 | C20004736M101S | 1 | | |
| | R2217 | nsp | 330K-J,1/16W-1005REEL | E400E3,X2000E3 | C20003346M101S | 1 | | |
| | R2221 | nsp | 0-J,1/16W-1005REEL | E400E3,X2000E3 | C20000006M101S | 1 | | |
| | R2222 | nsp | 0-J,1/16W-1005REEL | X2000E1C,E2,K | C20000006M101S | 1 | | |
| | R2224 | nsp | 820-J,1/16W-1005REEL | | C20008216M101S | 1 | | |
| | R2225 | nsp | 680-J,1/16W-1005REEL | | C20006816M101S | 1 | | |
| | R2226 | nsp | 0-J,1/16W-1005REEL | X2000E1C,E2,K | C20000006M101S | 1 | | |
| | R2229,2230 | nsp | 0-J,1/16W-1005REEL | | C20000006M101S | 2 | | |
| | R2232 | nsp | 0-J,1/16W-1608REEL | | C20000006M160S | 1 | | |
| | R2235 | nsp | 33-J,1/16W-1005REEL | | C20003306M101S | 1 | | |
| | R2237 | nsp | 33-J,1/16W-1005REEL | | C20003306M101S | 1 | | |
| | R2240-2242 | nsp | 33-J,1/16W-1005REEL | | C20003306M101S | 3 | | |
| | R2244-2249 | nsp | 33-J,1/16W-1005REEL | | C20003306M101S | 6 | | |
| | R2251 | nsp | 33-J,1/16W-1005REEL | | C20003306M101S | 1 | | |
| | R2252,2253 | nsp | 4.7K-J,1/16W-1005REEL | | C20004726M101S | 2 | | |
| | R2254 | nsp | 1K-J,1/16W-1005REEL | | C20001026M101S | 1 | | |
| | R2264 | nsp | 33-J,1/16W-1005REEL | | C20003306M101S | 1 | | |
| | R2266-2268 | nsp | 10K-J,1/16W-1005REEL | | C20001036M111S | 3 | | |
| | R2269,2270 | nsp | 33-J,1/16W-1005REEL | | C20003306M101S | 2 | | |
| | R2271-2274 | nsp | 100-J,1/16W-1005REEL | | C20001016M101S | 4 | | |
| | R2275 | nsp | 4.7K-J,1/16W-1005REEL | | C20004726M101S | 1 | | |
| | R2276 | nsp | 1K-J,1/16W-1005REEL | | C20001026M101S | 1 | | |
| | R2277,2278 | nsp | 10K-J,1/16W-1005REEL | | C20001036M111S | 2 | | |
| | R2286 | nsp | 33-J,1/16W-1005REEL | | C20003306M101S | 1 | | |
| | R2301 | nsp | 33-J,1/16W-1005REEL | | C20003306M101S | 1 | | |
| | R2402 | nsp | 0-J,1/16W-1005REEL | | C20000006M101S | 1 | | |
| | R2405 | nsp | 10K-J,1/16W-1005REEL | | C20001036M111S | 1 | | |
| | R2406,2407 | nsp | 470-J,1/16W-1005REEL | | C20004716M101S | 2 | | |
| | R2408,2409 | nsp | 0-J,1/16W-1608REEL | | C20000006M160S | 2 | | |
| | R2410,2411 | nsp | 100K-J,1/16W-1005REEL | | C20001046M101S | 2 | | |
| | R2412 | nsp | 1K-J,1/16W-1005REEL | | C20001026M101S | 1 | | |
| | R2413,2414 | nsp | 0-J,1/16W-1608REEL | | C20000006M160S | 2 | | |
| | R2415-2430 | nsp | 15K-J,1/16W-1608REEL | | C20001536M160S | 6 | | |
| | R2438 | nsp | 300K-J,1/16W-1608REEL | | C20003046M160S | 1 | | |
| | R2443,2444 | nsp | 0-J,1/16W-1608REEL | | C20000006M160S | 2 | | |
| | R2445-2447 | nsp | 11K-J,1/16W-1608REEL | | C20001136M160S | 3 | | |
| | R2448 | nsp | 24K-J,1/16W-1608REEL | | C20002436M160S | 1 | | |
| | R2449,2450 | nsp | 16K-J,1/16W-1608REEL | | C20001636M160S | 2 | | |
| | R2451,2452 | nsp | 11K-J,1/16W-1608REEL | | C20001136M160S | 2 | | |
| | R2453-2468 | nsp | 820-J,1/16W-1608REEL | | C20008216M160S | 16 | | |
| | R2470,2471 | nsp | 11K-J,1/16W-1608REEL | | C20001136M160S | 2 | | |
| | R2474 | nsp | 11K-J,1/16W-1608REEL | | C20001136M160S | 1 | | |
| | R2475 | nsp | 24K-J,1/16W-1608REEL | | C20002436M160S | 1 | | |
| | R2476 | nsp | 300K-J,1/16W-1608REEL | | C20003046M160S | 1 | | |
| | R2478,2479 | nsp | 16K-J,1/16W-1608REEL | | C20001636M160S | 2 | | |
| | R2482,2483 | nsp | 11K-J,1/16W-1608REEL | | C20001136M160S | 2 | | |
| | R2489-2496 | nsp | 100-J,1/16W-1608REEL | | C20001016M160S | 8 | | |
| | R2497,2498 | nsp | 470K-J,1/16W-1608REEL | | C20004746M160S | 2 | | |
| | R2501 | nsp | 10K-J,1/16W-1005REEL | | C20001036M111S | 1 | | |
| | R2502 | nsp | 0-J,1/16W-1005REEL | | C20000006M101S | 1 | | |
| | R2504,2505 | nsp | 4.7K-J,1/16W-1005REEL | | C20004726M101S | 2 | | |
| | R2508-2510 | nsp | 33-J,1/16W-1005REEL | | C20003306M101S | 3 | | |
| | R2604 | nsp | 10K-J,1/16W-1005REEL | | C20001036M111S | 1 | | |
| | R2605-2608 | nsp | 33-J,1/16W-1005REEL | | C20003306M101S | 4 | | |
| | R2609-2611 | nsp | 10K-J,1/16W-1005REEL | | C20001036M111S | 3 | | |
| | R2612 | nsp | 1K-J,1/16W-1005REEL | | C20001026M101S | 1 | | |
| | R2613 | nsp | 10K-J,1/16W-1005REEL | | C20001036M111S | 1 | | |
| | R2614 | nsp | 3K-F,1/16W-1608REEL | | C20003024M161S | 1 | | |
| | R2615-2617 | nsp | 33-J,1/16W-1005REEL | | C20003306M101S | 3 | | |
| | R2618 | nsp | 13K-D,1/16W-1608REEL | | C20001331M160S | 1 | | |
| | R2619 | nsp | 6.2K-D,1/16W-1608REEL | | C20006221M160S | 1 | | |
| | R2620 | nsp | 33-J,1/16W-1005REEL | | C20003306M101S | 1 | | |
| | R2621 | nsp | 1M-J,1/16W-1005REEL | | C20001056M101S | 1 | | |
| | R2622 | nsp | 1.5K-J,1/16W-1005REEL | | C20001526M101S | 1 | | |
| | R2623-2626 | nsp | 33-J,1/16W-1005REEL | | C20003306M101S | 4 | | |
| | R2629,2630 | nsp | 33-J,1/16W-1005REEL | | C20003306M101S | 2 | | |
| | R2631,2632 | nsp | 10-J,1/16W-1005REEL | | C20001006M101S | 2 | | |
| | R2633 | nsp | 0-J,1/16W-1005REEL | | C20000006M101S | 1 | | |
| | R2634 | nsp | 2.7K-J,1/16W-1005REEL | | C20002726M101S | 1 | | |
| | R2635 | nsp | 1.5K-J,1/16W-1005REEL | | C20001526M101S | 1 | | |
| | R2636 | nsp | 33-J,1/16W-1005REEL | | C20003306M101S | 1 | | |
| | R2640 | nsp | 4.7K-J,1/16W-1005REEL | | C20004726M101S | 1 | | |
| | R2641-2644 | nsp | 33-J,1/16W-1005REEL | | C20003306M101S | 4 | | |
| | R2646 | nsp | 33-J,1/16W-1005REEL | | C20003306M101S | 1 | | |
| | R2647 | nsp | 4.7K-J,1/16W-1005REEL | | C20004726M101S | 1 | | |
| | R2650 | nsp | 10K-J,1/16W-1005REEL | | C20001036M111S | 1 | | |
| | R2651,2652 | nsp | 4.7K-J,1/16W-1005REEL | | C20004726M101S | 2 | | |
| | R2653 | nsp | 0-J,1/16W-1005REEL | | C20000006M101S | 1 | | |
| | R2701-2703 | nsp | 10K-J*4 1/16W SMD(1005) WA04 | | C1801030421005 | 3 | | |
| | R2704-2706 | nsp | 33-J 1/16W SMD(1005)*4 WA04X | | C1803300421005 | 3 | | |
| | R2707 | nsp | 10K-J,1/16W-1005REEL | | C20001036M111S | 1 | | |
| | R2708 | nsp | 10K-J*4 1/16W SMD(1005) WA04 | | C1801030421005 | 1 | | |
| | R2709-2716 | nsp | 33-J 1/16W SMD(1005)*4 WA04X | | C1803300421005 | 8 | | |
| | R2717 | nsp | 47-J 1/16W SMD(1005)*4 WA04X | | C1804700421005 | 1 | | |
| | R2718 | nsp | 33-J 1/16W SMD(1005)*4 WA04X | | C1803300421005 | 1 | | |
| | R2719 | nsp | 4.7K-J 1/16W SMD(1005)*4 WA04X | | C1804720421005 | 1 | | |
| | R2720 | nsp | 47-J 1/16W SMD(1005)*4 WA04X | | C1804700421005 | 1 | | |
| | R2721 | nsp | 10K-J,1/16W-1005REEL | | C20001036M111S | 1 | | |
| | R2801 | nsp | 0-J,1/16W-1005REEL | | C20000006M101S | 1 | | |
| | R2803 | nsp | 10-F,1/16W-1005REEL | | C20001004M100S | 1 | | |
| | R2805,2806 | nsp | 3.3-J,1/16W-1005REEL | | C2003R306M101S | 2 | | |
| | R2812-2816 | nsp | 33-J,1/16W-1005REEL | | C20003306M101S | 5 | | |
| | R2817 | nsp | 100-J,1/16W-1005REEL | | C20001016M101S | 1 | | |
| | R2819 | nsp | 33-J,1/16W-1005REEL | | C20003306M101S | 1 | | |
| | R2820 | nsp | 10K-J,1/16W-1005REEL | | C20001036M111S | 1 | | |
| | R2822-2825 | nsp | 10K-J,1/16W-1005REEL | | C20001036M111S | 4 | | |
| | R2826 | nsp | 1.5K-F,1/16W-1005REEL | | C20001524M100S | 1 | | |
| | R2827 | nsp | 1.5K-J,1/16W-1005REEL | | C20001526M101S | 1 | | |
| | R2828 | nsp | 10K-J,1/16W-1005REEL | | C20001036M111S | 1 | | |

| | REF No. | Part No. | Part Name | Remarks | | Q'ty | New | Ver |
|---|---|---|---|---|---|---|---|---|
| | R2829,2830 | nsp | 49.9-F,1/16W-1608REEL | | C20049R94M161S | 2 | | |
| | R2831 | nsp | 8.2K-F,1/16W-1005REEL | | C20008224M101S | 1 | | |
| | R2832,2833 | nsp | 49.9-F,1/16W-1608REEL | | C20049R94M161S | 2 | | |
| | R2834 | nsp | 3.9K-F,1/16W-1005REEL | | C20003924M100S | 1 | | |
| | R2850 | nsp | 0-J,1/16W-1005REEL | | C20000006M101S | 1 | | |
| | R2856 | nsp | 0-J,1/16W-1005REEL | | C20000006M101S | 1 | | |
| | R2859 | nsp | 0-J,1/16W-1005REEL | | C20000006M101S | 1 | | |
| | R2863 | nsp | 100-J,1/16W-1005REEL | | C20001016M101S | 1 | | |
| | R2864,2865 | nsp | 4.7K-J,1/16W-1005REEL | | C20004726M101S | 2 | | |
| | R3003 | nsp | 1K-J,1/16W-1005REEL | X2000E3 | C20001026M101S | 1 | | |
| | R3004 | nsp | 3.3K-J,1/16W-1005REEL | X2000E3 | C20003326M101S | 1 | | |
| | R3005 | nsp | 2.2K-J,1/16W-1005REEL | X2000E3 | C20002226M101S | 1 | | |
| | R3009 | nsp | 100K-J,1/16W-1005REEL | X2000E3 | C20001046M101S | 1 | | |
| | R3017 | nsp | 18K-J,1/16W-1608REEL | E400E3 | C20001836M160S | 1 | | |
| | R3017 | nsp | 10K-J,1/16W-1608REEL | X2000E1C,K | C20001036M160S | 1 | | |
| | R3017 | nsp | 0-J,1/16W-1608REEL | X2000E2 | C20000006M160S | 1 | | |
| | R3018 | nsp | 3.3K-J,1/16W-1608REEL | E400E3 | C20003326M160S | 1 | | |
| | R3018 | nsp | 10K-J,1/16W-1608REEL | X2000E1C | C20001036M160S | 1 | | |
| | R3018 | nsp | 0-J,1/16W-1608REEL | X2000E3 | C20000006M160S | 1 | | |
| | R3018 | nsp | 22K-J,1/16W-1608REEL | X2000K | C20002236M160S | 1 | | |
| | R3019-3022 | nsp | 33-J,1/16W-1005REEL | | C20003306M101S | 4 | | |
| | R3023 | nsp | 0-J,1/16W-1005REEL | | C20000006M101S | 1 | | |
| | R3024-3029 | nsp | 33-J,1/16W-1005REEL | | C20003306M101S | 6 | | |
| | R3030,3031 | nsp | 0-J,1/16W-1005REEL | | C20000006M101S | 2 | | |
| | R3032-3034 | nsp | 33-J,1/16W-1005REEL | | C20003306M101S | 3 | | |
| | R3035 | nsp | 4.7K-J,1/16W-1005REEL | | C20004726M101S | 1 | | |
| | R3037 | nsp | 33-J,1/16W-1005REEL | | C20003306M101S | 1 | | |
| | R3038 | nsp | 4.7K-J,1/16W-1005REEL | | C20004726M101S | 1 | | |
| | R3042,3043 | nsp | 33-J,1/16W-1005REEL | | C20003306M101S | 2 | | |
| | R3044 | nsp | 10K-J,1/16W-1005REEL | | C20001036M111S | 1 | | |
| | R3045 | nsp | 33-J,1/16W-1005REEL | | C20003306M101S | 1 | | |
| | R3048 | nsp | 33-J,1/16W-1005REEL | | C20003306M101S | 1 | | |
| | R3050 | nsp | 33-J,1/16W-1005REEL | | C20003306M101S | 1 | | |
| | R3051 | nsp | 0-J,1/16W-1005REEL | | C20000006M101S | 1 | | |
| | R3058-3061 | nsp | 33-J,1/16W-1005REEL | | C20003306M101S | 4 | | |
| | R3062 | nsp | 10-J,1/16W-1005REEL | | C20001006M101S | 1 | | |
| | R3063,3064 | nsp | 33-J,1/16W-1005REEL | | C20003306M101S | 2 | | |
| | R3065-3067 | nsp | 1K-J,1/16W-1005REEL | | C20001026M101S | 3 | | |
| | R3068 | nsp | 10K-J,1/16W-1005REEL | | C20001036M111S | 1 | | |
| | R3069-3076 | nsp | 33-J,1/16W-1005REEL | | C20003306M101S | 8 | | |
| | R3077,3078 | nsp | 4.7K-J,1/16W-1005REEL | | C20004726M101S | 2 | | |
| | R3079 | nsp | 33-J,1/16W-1005REEL | | C20003306M101S | 1 | | |
| | R3081 | nsp | 33-J,1/16W-1005REEL | | C20003306M101S | 1 | | |
| | R3084 | nsp | 4.7K-J,1/16W-1005REEL | | C20004726M101S | 1 | | |
| | R3086 | nsp | 4.7K-J,1/16W-1005REEL | | C20004726M101S | 1 | | |
| | R3088 | nsp | 4.7K-J,1/16W-1005REEL | | C20004726M101S | 1 | | |
| | R3090 | nsp | 4.7K-J,1/16W-1005REEL | | C20004726M101S | 1 | | |
| | R3092 | nsp | 10K-J,1/16W-1005REEL | | C20001036M111S | 1 | | |
| | R3094 | nsp | 4.7K-J,1/16W-1005REEL | | C20004726M101S | 1 | | |
| | R3098 | nsp | 4.7K-J,1/16W-1005REEL | | C20004726M101S | 1 | | |
| | R3100 | nsp | 33-J,1/16W-1005REEL | | C20003306M101S | 1 | | |
| | R3103 | nsp | 0-J,1/16W-1608REEL | | C20000006M160S | 1 | | |
| | R3104-3106 | nsp | 33-J,1/16W-1005REEL | | C20003306M101S | 3 | | |
| | R3107 | nsp | 10K-J,1/16W-1005REEL | | C20001036M111S | 1 | | |
| | R3201 | nsp | 4.7K-J,1/16W-1005REEL | | C20004726M101S | 1 | | |
| | R3202 | nsp | 2.2M-J,1/16W-1005REEL | | C20002256M101S | 1 | | |
| | R3203 | nsp | 10K-J,1/16W-1005REEL | | C20001036M111S | 1 | | |
| | R3204 | nsp | 100K-J,1/16W-1005REEL | | C20001046M101S | 1 | | |
| | R3205 | nsp | 47K-J,1/16W-1005REEL | | C20004736M101S | 1 | | |
| | R3206 | nsp | 100K-J,1/16W-1005REEL | | C20001046M101S | 1 | | |
| | R3207 | nsp | 220K-J,1/16W-1005REEL | | C20002246M101S | 1 | | |
| | R3208 | nsp | 27K-J,1/16W-1005REEL | | C20002736M101S | 1 | | |
| | R3209 | nsp | 3.3K-J,1/16W-1005REEL | | C20003326M101S | 1 | | |
| | R3211 | nsp | 1.2K-J,1/16W-1005REEL | | C20001226M101S | 1 | | |
| | R3212-3213 | nsp | 0-J,1/16W-1005REEL | | C20000006M101S | 2 | | |
| | R3214 | nsp | 0-J,1/16W-1005REEL | X2000E3 | C20000006M101S | 1 | | |
| | R3215 | nsp | 4.7K-J,1/16W-1005REEL | | C20004726M101S | 1 | | |
| | R3216,3217 | nsp | 33-J,1/16W-1005REEL | | C20003306M101S | 2 | | |
| | R3218 | nsp | 0-J,1/16W-1005REEL | X2000E3 | C20000006M101S | 1 | | |
| | R3219 | nsp | 390-J,1/16W-1005REEL | | C20003916M101S | 1 | | |
| | R3220 | nsp | 100K-J,1/16W-1005REEL | | C20001046M101S | 1 | | |
| | R3221 | nsp | 2.7K-J,1/16W-1005REEL | | C20002726M101S | 1 | | |
| | R3222 | nsp | 270-J,1/16W-1005REEL | | C20002716M101S | 1 | | |
| | R3223 | nsp | 470K-J,1/16W-1005REEL | | C20004746M101S | 1 | | |
| | R3224 | nsp | 100-J,1/16W-1005REEL | | C20001016M101S | 1 | | |
| | R3225 | nsp | 1K-J,1/16W-1005REEL | | C20001026M101S | 1 | | |
| | R3226 | nsp | 100-J,1/16W-1005REEL | | C20001016M101S | 1 | | |
| | R3227 | nsp | 1K-J,1/16W-1005REEL | | C20001026M101S | 1 | | |
| | R3228 | nsp | 100K-J,1/16W-1005REEL | | C20001046M101S | 1 | | |
| | R3230 | nsp | 18K-J,1/16W-1005REEL | | C20001836M101S | 1 | | |
| | R3231 | nsp | 100-J,1/16W-1005REEL | | C20001016M101S | 1 | | |
| | R3232 | nsp | 4.7K-J,1/16W-1005REEL | | C20004726M101S | 1 | | |
| | R3234 | nsp | 100-J,1/16W-1005REEL | | C20001016M101S | 1 | | |
| | R3235 | nsp | 120K-J,1/16W-1005REEL | | C20001246M101S | 1 | | |
| | R3237 | nsp | 470-J,1/16W-1005REEL | | C20004716M101S | 1 | | |
| | R3238 | nsp | 10K-J,1/16W-1005REEL | | C20001036M111S | 1 | | |
| | R3239,3240 | nsp | 4.7K-J,1/16W-1005REEL | | C20004726M101S | 2 | | |
| | R3241 | nsp | 390-J,1/16W-1005REEL | | C20003916M101S | 1 | | |
| | R3242 | nsp | 100-J,1/16W-1005REEL | | C20001016M101S | 1 | | |
| | R3243 | nsp | 2.7K-J,1/16W-1005REEL | | C20002726M101S | 1 | | |
| | R3244 | nsp | 270-J,1/16W-1005REEL | | C20002716M101S | 1 | | |
| | R3245 | nsp | 120K-J,1/16W-1005REEL | | C20001246M101S | 1 | | |
| | R3247 | nsp | 470-J,1/16W-1005REEL | | C20004716M101S | 1 | | |
| | R3248 | nsp | 1K-J,1/16W-1005REEL | | C20001026M101S | 1 | | |
| | R3249 | nsp | 100-J,1/16W-1005REEL | | C20001016M101S | 1 | | |
| | R3250 | nsp | 4.7K-J,1/16W-1005REEL | | C20004726M101S | 1 | | |
| | R3251 | nsp | 1K-J,1/16W-1005REEL | | C20001026M101S | 1 | | |
| | R3252 | nsp | 100-J,1/16W-1005REEL | | C20001016M101S | 1 | | |
| | R3401 | nsp | 0-J,1/16W-1005REEL | | C20000006M101S | 1 | | |
| | R3601 | nsp | 0-J,1/16W-1005REEL | | C20000006M101S | 1 | | |
| | R3602 | nsp | 10K-J,1/16W-1005REEL | | C20001036M111S | 1 | | |
| | R3603-3605 | nsp | 0-J,1/16W-1005REEL | | C20000006M101S | 3 | | |
| | R3607 | nsp | 4.7K-J,1/16W-1005REEL | | C20004726M101S | 1 | | |
| | R3609-3611 | nsp | 4.7K-J,1/16W-1005REEL | | C20004726M101S | 3 | | |
| | R3625 | nsp | 150K-D,1/16W-1608REEL | | C20001541M160S | 1 | | |
| | R3626 | nsp | 47K-D,1/16W-1608REEL | | C20004731M160S | 1 | | |
| | R3627 | nsp | 150K-D,1/16W-1608REEL | | C20001541M160S | 1 | | |
| | R3628 | nsp | 120K-D,1/16W-1608REEL | | C20001241M160S | 1 | | |
| | R3629 | nsp | 150K-D,1/16W-1608REEL | | C20001541M160S | 1 | | |
| | R3630 | nsp | 470K-D,1/16W-1608REEL | | C20004741M160S | 1 | | |

| | REF No. | Part No. | Part Name | Remarks | | Q'ty | New | Ver |
|---|---|---|---|---|---|---|---|---|
| | R3631 | nsp | 150K-D,1/16W-1608REEL | | C20001541M160S | 1 | | |
| | R3632 | nsp | 300K-D,1/16W-1608REEL | | C20003041M160S | 1 | | |
| | R3633 | nsp | 150K-D,1/16W-1608REEL | | C20001541M160S | 1 | | |
| | R3634 | nsp | 120K-D,1/16W-1608REEL | | C20001241M160S | 1 | | |
| | R3637 | nsp | 680K-J,1/16W-1608REEL | | C20006846M160S | 1 | | |
| | R3638,3639 | nsp | 1M-J,1/16W-1608REEL | | C20001056M160S | 2 | | |
| | R3640 | nsp | 1.5M-J,1/16W-1608REEL | | C20001556M160S | 1 | | |
| | R3641 | nsp | 820K-J,1/16W-1608REEL | | C20008246M160S | 1 | | |
| | R3647 | nsp | 0-J,1/16W-1005REEL | | C20000006M101S | 1 | | |
| | R3649-3660 | nsp | 10K-J,1/16W-1005REEL | | C20001036M111S | 12 | | |
| | R3661,3662 | nsp | 3.3K-J,1/16W-1005REEL | | C20003326M101S | 2 | | |
| | R3663,3664 | nsp | 10K-J,1/16W-1005REEL | | C20001036M111S | 2 | | |
| | R3666,3667 | nsp | 10K-J,1/16W-1005REEL | | C20001036M111S | 2 | | |
| | R3669 | nsp | 10K-J,1/16W-1005REEL | | C20001036M111S | 1 | | |
| | R3670,3671 | nsp | 3.3K-J,1/16W-1005REEL | | C20003326M101S | 2 | | |
| | R3672 | nsp | 0-J,1/16W-1005REEL | | C20000006M101S | 1 | | |
| | R3673,3674 | nsp | 3.3K-J,1/16W-1005REEL | | C20003326M101S | 2 | | |
| | R3676 | nsp | 3.3K-J,1/16W-1005REEL | | C20003326M101S | 1 | | |
| | R3678 | nsp | 4.7K-J,1/16W-1005REEL | | C20004726M101S | 1 | | |
| | R3679 | nsp | 47K-J,1/16W-1005REEL | | C20004736M101S | 1 | | |
| | R3680 | nsp | 100K-J,1/16W-1005REEL | | C20001046M101S | 1 | | |
| | R3681 | nsp | 100-J,1/16W-1005REEL | | C20001016M101S | 1 | | |
| | R3687,3688 | nsp | 22-J,1/16W-1005REEL | | C20002206M101S | 2 | | |
| | R3689-3702 | nsp | 0-J,1/16W-1005REEL | | C20000006M101S | 14 | | |
| | R3703,3704 | nsp | 10K-J,1/16W-1005REEL | | C20001036M111S | 2 | | |
| | | | | | | | | |
| | **CAPACIITORS GROUP** | | | | | | | |
| | C1003-1007 | nsp | X7R)0.1UF-K/16V-1005REEL | | D0111041771015 | 5 | | |
| | C1010 | nsp | X7R)4.7UF-K/6.3V-1608REEL | | D0114755711605 | 1 | | |
| | C1016 | nsp | X7R)1000PF-K/50V-1005REEL | | D0111021771015 | 1 | | |
| | C1023 | nsp | X7R)1000PF-K/50V-1005REEL | | D0111021771015 | 1 | | |
| | C1025 | nsp | X7R)1000PF-K/50V-1005REEL | | D0111021771015 | 1 | | |
| | C1027 | nsp | X7R)1000PF-K/50V-1005REEL | | D0111021771015 | 1 | | |
| | C1029 | nsp | X7R)1000PF-K/50V-1005REEL | | D0111021771015 | 1 | | |
| | C1031 | nsp | X7R)1000PF-K/50V-1005REEL | | D0111021771015 | 1 | | |
| | C1201-1207 | nsp | X7R)0.1UF-K/16V-1005REEL | | D0111041771015 | 7 | | |
| | C1208 | nsp | X5R)10UF-K/16V-2012REEL GRM21BR61C106KE15L | | D0111065732005 | 1 | | |
| | C1209 | nsp | X7R)1000PF-K/50V-1005REEL | | D0111021771015 | 1 | | |
| | C1210 | nsp | X7R)0.01UF-K/25V-1005REEL | | D0111031741015 | 1 | | |
| | C1211 | nsp | X7R)1000PF-K/50V-1005REEL | | D0111021771015 | 1 | | |
| | C1212 | nsp | X5R)10UF-K/16V-2012REEL GRM21BR61C106KE15L | | D0111065732005 | 1 | | |
| | C1219 | nsp | X5R)10UF-K/16V-2012REEL GRM21BR61C106KE15L | | D0111065732005 | 1 | | |
| | C1301-1304 | nsp | X7R)0.1UF-K/16V-1005REEL | | D0111041771015 | 4 | | |
| | C1305 | nsp | X7R)1000PF-K/50V-1005REEL | | D0111021771015 | 1 | | |
| | C1306-1309 | nsp | X7R)0.1UF-K/16V-1005REEL | | D0111041771015 | 4 | | |
| | C1312 | nsp | X7R)1000PF-K/50V-1005REEL | | D0111021771015 | 1 | | |
| | C1314-1322 | nsp | 0-J,1/16W-1005REEL | | C20000006M101S | 9 | | |
| | C1323-1325 | nsp | X7R)0.1UF-K/16V-1005REEL | | D0111041771015 | 3 | | |
| | C1326 | nsp | 0-J,1/16W-1005REEL | | C20000006M101S | 1 | | |
| | C1327 | nsp | X7R)0.1UF-K/16V-1005REEL | | D0111041771015 | 1 | | |
| | C1329-1331 | nsp | X7R)0.1UF-K/16V-1005REEL | | D0111041771015 | 3 | | |
| | C1333 | nsp | X7R)0.1UF-K/16V-1005REEL | | D0111041771015 | 1 | | |
| | C1335,1336 | nsp | X7R)0.01UF-K/25V-1005REEL | | D0111031741015 | 2 | | |
| | C1337 | nsp | X7R)0.1UF-K/16V-1005REEL | | D0111041771015 | 1 | | |
| | C1339 | nsp | X7R)0.1UF-K/16V-1005REEL | | D0111041771015 | 1 | | |
| | C1341 | nsp | X7R)0.1UF-K/16V-1005REEL | | D0111041771015 | 1 | | |
| | C1342 | nsp | X7R)0.01UF-K/25V-1005REEL | | D0111031741015 | 1 | | |
| | C1345 | nsp | X7R)0.01UF-K/25V-1005REEL | | D0111031741015 | 1 | | |
| | C1350 | nsp | X7R)0.01UF-K/25V-1005REEL | | D0111031741015 | 1 | | |
| | C1351 | nsp | X7R)0.1UF-K/16V-1005REEL | | D0111041771015 | 1 | | |
| | C1358 | nsp | X7R)0.01UF-K/25V-1005REEL | | D0111031741015 | 1 | | |
| | C1361 | nsp | X7R)0.1UF-K/16V-1005REEL | | D0111041771015 | 1 | | |
| | C1362 | nsp | X7R)4.7UF-K/6.3V-1608REEL | | D0114755711605 | 1 | | |
| | C1364 | nsp | X7R)0.01UF-K/25V-1005REEL | | D0111031741015 | 1 | | |
| | C1367 | nsp | X7R)0.1UF-K/16V-1005REEL | | D0111041771015 | 1 | | |
| | C1369 | nsp | X7R)4.7UF-K/6.3V-1608REEL | | D0114755711605 | 1 | | |
| | C1370 | nsp | X7R)1000PF-K/50V-1005REEL | | D0111021771015 | 1 | | |
| | C1373 | nsp | X7R)0.01UF-K/25V-1005REEL | | D0111031741015 | 1 | | |
| | C1377 | nsp | X7R)0.01UF-K/25V-1005REEL | | D0111031741015 | 1 | | |
| | C1381 | nsp | X7R)0.1UF-K/16V-1005REEL | | D0111041771015 | 1 | | |
| | C1385 | nsp | X7R)0.1UF-K/16V-1005REEL | | D0111041771015 | 1 | | |
| | C1387,1388 | nsp | X7R)0.1UF-K/16V-1005REEL | | D0111041771015 | 2 | | |
| | C1391 | nsp | X7R)0.01UF-K/25V-1005REEL | | D0111031741015 | 1 | | |
| | C1393 | nsp | X7R)0.01UF-K/25V-1005REEL | | D0111031741015 | 1 | | |
| | C1395 | nsp | X7R)0.1UF-K/16V-1005REEL | | D0111041771015 | 1 | | |
| | C1396 | nsp | X7R)0.01UF-K/25V-1005REEL | | D0111031741015 | 1 | | |
| | C1398 | nsp | X7R)4.7UF-K/6.3V-1608REEL | | D0114755711605 | 1 | | |
| | C1401 | nsp | X7R)0.1UF-K/16V-1005REEL | | D0111041771015 | 1 | | |
| | C1402 | nsp | X7R)0.01UF-K/25V-1005REEL | | D0111031741015 | 1 | | |
| | C1407 | nsp | X7R)0.01UF-K/25V-1005REEL | | D0111031741015 | 1 | | |
| | C1410 | nsp | X7R)0.1UF-K/16V-1005REEL | | D0111041771015 | 1 | | |
| | C1411 | nsp | X7R)0.01UF-K/25V-1005REEL | | D0111031741015 | 1 | | |
| | C1412 | nsp | X7R)4.7UF-K/6.3V-1608REEL | | D0114755711605 | 1 | | |
| | C1415 | nsp | X7R)0.01UF-K/25V-1005REEL | | D0111031741015 | 1 | | |
| | C1416 | nsp | X7R)0.1UF-K/16V-1005REEL | | D0111041771015 | 1 | | |
| | C1418 | nsp | X7R)0.1UF-K/16V-1005REEL | | D0111041771015 | 1 | | |
| | C1419 | nsp | X7R)0.01UF-K/25V-1005REEL | | D0111031741015 | 1 | | |
| | C1420,1421 | nsp | X7R)0.1UF-K/16V-1005REEL | | D0111041771015 | 2 | | |
| | C1424 | nsp | X7R)0.01UF-K/25V-1005REEL | | D0111031741015 | 1 | | |
| | C1425 | nsp | X7R)0.1UF-K/16V-1005REEL | | D0111041771015 | 1 | | |
| | C1429 | nsp | X7R)0.1UF-K/16V-1005REEL | | D0111041771015 | 1 | | |
| | C1430 | nsp | X7R)0.01UF-K/25V-1005REEL | | D0111031741015 | 1 | | |
| | C1431 | nsp | X7R)0.1UF-K/16V-1005REEL | | D0111041771015 | 1 | | |
| | C1434,1435 | nsp | X7R)0.01UF-K/25V-1005REEL | | D0111031741015 | 2 | | |
| | C1439,1440 | nsp | X7R)0.01UF-K/25V-1005REEL | | D0111031741015 | 1 | | |
| | C1441 | nsp | X7R)0.1UF-K/16V-1005REEL | | D0111041771015 | 1 | | |
| | C1443,1444 | nsp | X7R)0.1UF-K/16V-1005REEL | | D0111041771015 | 2 | | |
| | C1445 | nsp | X7R)0.01UF-K/25V-1005REEL | | D0111031741015 | 1 | | |
| | C1446,1447 | nsp | X7R)0.1UF-K/16V-1005REEL | | D0111041771015 | 2 | | |
| | C1448 | nsp | X7R)0.01UF-K/25V-1005REEL | | D0111031741015 | 1 | | |
| | C1449 | nsp | X7R)0.1UF-K/16V-1005REEL | | D0111041771015 | 1 | | |
| | C1450,1451 | nsp | X7R)0.01UF-K/25V-1005REEL | | D0111031741015 | 2 | | |
| | C1452,1453 | nsp | X7R)0.1UF-K/16V-1005REEL | | D0111041771015 | 2 | | |
| | C1454-1461 | nsp | X7R)0.01UF-K/25V-1005REEL | | D0111031741015 | 8 | | |
| | C1462,1463 | nsp | X7R)0.1UF-K/16V-1005REEL | | D0111041771015 | 2 | | |
| | C1464 | nsp | X7R)4.7UF-K/6.3V-1608REEL | | D0114755711605 | 1 | | |
| | C1465 | nsp | X7R)0.1UF-K/16V-1005REEL | | D0111041771015 | 1 | | |
| | C1466 | nsp | X7R)4.7UF-K/6.3V-1608REEL | | D0114755711605 | 1 | | |
| | C1467 | nsp | X7R)0.01UF-K/25V-1005REEL | | D0111031741015 | 1 | | |
| | C1468,1469 | nsp | X7R)0.1UF-K/16V-1005REEL | | D0111041771015 | 2 | | |

| | REF No. | Part No. | Part Name | Remarks | | Q'ty | New | Ver |
|---|---|---|---|---|---|---|---|---|
| | C1470 | nsp | X7R)0.01UF-K/25V-1005REEL | | D011103174101S | 1 | | |
| | C1472 | nsp | X7R)4.7UF-K/6.3V-1608REEL | | D011475571160S | 1 | | |
| | C1474,1475 | nsp | X7R)0.01UF-K/25V-1005REEL | | D011103174101S | 2 | | |
| | C1476 | nsp | X7R)0.1UF-K/16V-1005REEL | | D011104177101S | 1 | | |
| | C1477,1478 | nsp | X7R)0.01UF-K/25V-1005REEL | | D011103174101S | 2 | | |
| | C1479 | nsp | X7R)4.7UF-K/6.3V-1608REEL | | D011475571160S | 1 | | |
| | C1480 | nsp | X7R)0.1UF-K/16V-1005REEL | | D011104177101S | 1 | | |
| | C1481 | nsp | X7R)0.01UF-K/25V-1005REEL | | D011103174101S | 1 | | |
| | C1482 | nsp | X7R)4.7UF-K/6.3V-1608REEL | | D011475571160S | 1 | | |
| | C1484 | nsp | X7R)0.1UF-K/16V-1005REEL | | D011104177101S | 1 | | |
| | C1485 | nsp | X7R)0.01UF-K/25V-1005REEL | | D011103174101S | 1 | | |
| | C1486-1489 | nsp | X7R)0.1UF-K/16V-1005REEL | | D011104177101S | 4 | | |
| | C1490 | nsp | X7R)0.01UF-K/25V-1005REEL | | D011103174101S | 1 | | |
| | C1491 | nsp | X7R)0.1UF-K/16V-1005REEL | | D011104177101S | 1 | | |
| | C1492 | nsp | X7R)0.01UF-K/25V-1005REEL | | D011103174101S | 1 | | |
| | C1494 | nsp | X7R)0.01UF-K/25V-1005REEL | | D011103174101S | 1 | | |
| | C1495-1498 | nsp | X7R)4.7UF-K/6.3V-1608REEL | | D011475571160S | 4 | | |
| | C1500 | nsp | X7R)0.1UF-K/25V-1608REEL | | D011104774161S | 1 | | |
| | C1511,1512 | nsp | COG8PF-D/50V-1608REEL | | D010080117160S | 2 | | |
| | C1513 | nsp | X7R)1UF-K/10V-1608REEL | | D011105772161S | 1 | | |
| | C1514 | nsp | X7R)0.1UF-K/16V-1005REEL | | D011104177101S | 1 | | |
| | C1516,1517 | nsp | X7R)0.1UF-K/16V-1005REEL | | D011104177101S | 2 | | |
| | C1605,1606 | nsp | X7R)4.7UF-K/6.3V-1608REEL | | D011475571160S | 2 | | |
| | C1607-1609 | nsp | X7R)0.1UF-K/16V-1005REEL | | D011104177101S | 3 | | |
| | C1610 | nsp | X7R)0.01UF-K/25V-1005REEL | | D011103174101S | 1 | | |
| | C1611-1613 | nsp | X7R)0.1UF-K/16V-1005REEL | | D011104177101S | 3 | | |
| | C1614,1615 | nsp | X7R)0.01UF-K/25V-1005REEL | | D011103174101S | 2 | | |
| | C1616-1620 | nsp | X7R)0.1UF-K/16V-1005REEL | | D011104177101S | 5 | | |
| | C1621 | nsp | X7R)0.01UF-K/25V-1005REEL | | D011103174101S | 1 | | |
| | C1622,1623 | nsp | X7R)0.1UF-K/16V-1005REEL | | D011104177101S | 2 | | |
| | C1624 | nsp | X7R)0.01UF-K/25V-1005REEL | | D011103174101S | 1 | | |
| | C1625 | nsp | X7R)0.1UF-K/16V-1005REEL | | D011104177101S | 1 | | |
| | C1626-1632 | nsp | X7R)0.01UF-K/25V-1005REEL | | D011103174101S | 7 | | |
| | C1633 | nsp | X7R)4.7UF-K/6.3V-1608REEL | | D011475571160S | 1 | | |
| | C1634 | nsp | X7R)0.1UF-K/16V-1005REEL | | D011104177101S | 1 | | |
| | C1635 | nsp | X7R)0.01UF-K/25V-1005REEL | | D011103174101S | 1 | | |
| | C1636 | nsp | X7R)0.1UF-K/16V-1005REEL | | D011104177101S | 1 | | |
| | C1637 | nsp | X7R)4.7UF-K/6.3V-1608REEL | | D011475571160S | 1 | | |
| | C1639 | nsp | X7R)0.1UF-K/16V-1005REEL | | D011104177101S | 1 | | |
| | C1640 | nsp | X7R)4.7UF-K/6.3V-1608REEL | | D011475571160S | 1 | | |
| | C1642 | nsp | X7R)0.1UF-K/16V-1005REEL | | D011104177101S | 1 | | |
| | C1643,1644 | nsp | X7R)0.01UF-K/25V-1005REEL | | D011103174101S | 2 | | |
| | C1645 | nsp | X7R)4.7UF-K/6.3V-1608REEL | | D011475571160S | 1 | | |
| | C1647 | nsp | X7R)0.1UF-K/16V-1005REEL | | D011104177101S | 1 | | |
| | C1649 | nsp | X7R)0.01UF-K/25V-1005REEL | | D011103174101S | 1 | | |
| | C1652 | nsp | X7R)4.7UF-K/6.3V-1608REEL | | D011475571160S | 1 | | |
| | C1654 | nsp | X7R)0.1UF-K/16V-1005REEL | | D011104177101S | 1 | | |
| | C1656 | nsp | X7R)0.01UF-K/25V-1005REEL | | D011103174101S | 1 | | |
| | C1659,1660 | nsp | X7R)4.7UF-K/6.3V-1608REEL | | D011475571160S | 2 | | |
| | C1661,1662 | nsp | X7R)0.1UF-K/16V-1005REEL | | D011104177101S | 2 | | |
| | C1663,1664 | nsp | X7R)0.01UF-K/25V-1005REEL | | D011103174101S | 2 | | |
| | C1665 | nsp | X7R)1000PF-K/50V-1005REEL | | D011102177101S | 1 | | |
| | C1666 | nsp | X7R)0.1UF-K/16V-1005REEL | | D011104177101S | 1 | | |
| | C1667 | nsp | X7R)1000PF-K/50V-1005REEL | | D011102177101S | 1 | | |
| | C1668,1669 | nsp | X7R)4.7UF-K/6.3V-1608REEL | | D011475571160S | 2 | | |
| | C1670,1671 | nsp | X7R)0.1UF-K/16V-1005REEL | | D011104177101S | 2 | | |
| | C1672 | nsp | X7R)0.01UF-K/25V-1005REEL | | D011103174101S | 1 | | |
| | C1673,1674 | nsp | X7R)0.1UF-K/16V-1005REEL | | D011104177101S | 2 | | |
| | C1675 | nsp | X7R)0.01UF-K/25V-1005REEL | | D011103174101S | 1 | | |
| | C1676 | nsp | X7R)0.1UF-K/16V-1005REEL | | D011104177101S | 1 | | |
| | C1677 | nsp | X7R)0.01UF-K/25V-1005REEL | | D011103174101S | 1 | | |
| | C1678 | nsp | X7R)0.1UF-K/16V-1005REEL | | D011104177101S | 1 | | |
| | C1679 | nsp | X7R)4.7UF-K/6.3V-1608REEL | | D011475571160S | 1 | | |
| | C1680 | nsp | X7R)0.1UF-K/16V-1005REEL | | D011104177101S | 1 | | |
| | C1681,1682 | nsp | X7R)0.01UF-K/25V-1005REEL | | D011103174101S | 2 | | |
| | C1683 | nsp | X7R)0.1UF-K/16V-1005REEL | | D011104177101S | 1 | | |
| | C1690 | nsp | X7R 0.15uF-K/10V-1608REEL | | D011154172160S | 1 | | |
| | C1691 | nsp | X7R)0.012UF-K/50V-1608REEL | | D011123177161S | 1 | | |
| | C1692 | nsp | X7R 0.15uF-K/10V-1608REEL | | D011154172160S | 1 | | |
| | C1693 | nsp | X7R)0.012UF-K/50V-1608REEL | | D011123177161S | 1 | | |
| | C1694 | nsp | X7R)0.01UF-K/25V-1005REEL | | D011103174101S | 1 | | |
| | C1697,1698 | nsp | X7R)4.7UF-K/6.3V-1608REEL | | D011475571160S | 2 | | |
| | C1700 | nsp | X7R)0.01UF-K/25V-1005REEL | | D011103174101S | 1 | | |
| | C1701 | nsp | COG)33PF-J/50V-1005REEL | | D011330167101S | 1 | | |
| | C1702,1703 | nsp | COG8PF-D/50V-1608REEL | | D010080117160S | 2 | | |
| | C1704 | nsp | X7R)4.7UF-K/6.3V-1608REEL | | D011475571160S | 1 | | |
| | C1705,1706 | nsp | X7R)1UF-K/10V-1608REEL | | D011105772161S | 2 | | |
| | C1707 | nsp | X7R)0.01UF-K/25V-1005REEL | | D011103174101S | 1 | | |
| | C1709,1710 | nsp | X7R)0.1UF-K/16V-1005REEL | | D011104177101S | 2 | | |
| | C1711 | nsp | X7R)4.7UF-K/6.3V-1608REEL | | D011475571160S | 1 | | |
| | C1712 | nsp | X7R)0.1UF-K/16V-1005REEL | | D011104177101S | 1 | | |
| | C1713 | nsp | X7R)0.01UF-K/25V-1005REEL | | D011103174101S | 1 | | |
| | C1730 | nsp | X7R)0.1UF-K/16V-1005REEL | | D011104177101S | 1 | | |
| | C1801 | nsp | X5R)10UF-K/16V-2012REEL GRM21BR61C106KE15L | | D011106573200S | 1 | | |
| | C1810-1825 | nsp | X7R)0.1UF-K/16V-1005REEL | | D011104177101S | 16 | | |
| | C1826 | nsp | X5R)10UF-K/16V-2012REEL GRM21BR61C106KE15L | | D011106573200S | 1 | | |
| | C1835-1851 | nsp | X7R)0.1UF-K/16V-1005REEL | | D011104177101S | 17 | | |
| | C1853 | nsp | X7R)1UF-K/10V-1608REEL | | D011105772161S | 1 | | |
| | C1854 | nsp | X7R)0.1UF-K/16V-1005REEL | | D011104177101S | 1 | | |
| | C2001 | nsp | X7R)1000PF-K/50V-1005REEL | | D011102177101S | 1 | | |
| | C2002 | nsp | X7R)0.1UF-K/16V-1005REEL | | D011104177101S | 1 | | |
| | C2003 | nsp | X7R)1000PF-K/50V-1005REEL | | D011102177101S | 1 | | |
| | C2004 | nsp | X7R)0.1UF-K/16V-1005REEL | | D011104177101S | 1 | | |
| | C2005 | nsp | X7R)1000PF-K/50V-1005REEL | | D011102177101S | 1 | | |
| | C2006 | nsp | X7R)0.1UF-K/16V-1005REEL | | D011104177101S | 1 | | |
| | C2007 | nsp | X7R)1000PF-K/50V-1005REEL | | D011102177101S | 1 | | |
| | C2008 | nsp | X7R)0.1UF-K/16V-1005REEL | | D011104177101S | 1 | | |
| | C2009 | nsp | X7R)1000PF-K/50V-1005REEL | | D011102177101S | 1 | | |
| | C2010 | nsp | X7R)0.1UF-K/16V-1005REEL | | D011104177101S | 1 | | |
| | C2011,2012 | nsp | X7R)1000PF-K/50V-1005REEL | | D011102177101S | 2 | | |
| | C2013 | nsp | X7R)0.1UF-K/16V-1005REEL | | D011104177101S | 1 | | |
| | C2014-2016 | nsp | X7R)1000PF-K/50V-1005REEL | | D011102177101S | 3 | | |
| | C2017,2018 | nsp | X7R)0.1UF-K/16V-1005REEL | | D011104177101S | 2 | | |
| | C2022 | nsp | X7R)1000PF-K/50V-1005REEL | | D011102177101S | 1 | | |
| | C2023,2024 | nsp | X7R)0.1UF-K/16V-1005REEL | | D011104177101S | 2 | | |
| | C2025 | nsp | X7R)1000PF-K/50V-1005REEL | | D011102177101S | 1 | | |
| | C2026 | nsp | X7R)0.1UF-K/16V-1005REEL | | D011104177101S | 1 | | |
| | C2027 | nsp | X7R)1000PF-K/50V-1005REEL | | D011102177101S | 1 | | |
| | C2028 | nsp | X7R)0.1UF-K/16V-1005REEL | | D011104177101S | 1 | | |
| | C2029 | nsp | X7R)1000PF-K/50V-1005REEL | | D011102177101S | 1 | | |

| | REF No. | Part No. | Part Name | Remarks | | Q'ty | New | Ver |
|---|---|---|---|---|---|---|---|---|
| | C2030 | nsp | X7R)0.1UF-K/16V-1005REEL | | D011104177101S | 1 | | |
| | C2031,2032 | nsp | X7R)1000PF-K/50V-1005REEL | | D011102177101S | 2 | | |
| | C2033 | nsp | X7R)0.1UF-K/16V-1005REEL | | D011104177101S | 1 | | |
| | C2034 | nsp | X7R)1000PF-K/50V-1005REEL | | D011102177101S | 1 | | |
| | C2035,2036 | nsp | X7R)0.1UF-K/16V-1005REEL | | D011104177101S | 2 | | |
| | C2037 | nsp | X7R)1000PF-K/50V-1005REEL | | D011102177101S | 1 | | |
| | C2038 | nsp | X7R)0.1UF-K/16V-1005REEL | | D011104177101S | 1 | | |
| | C2039 | nsp | C0G)9PF-D/50V-1005REEL | | D011090117101S | 1 | | |
| | C2040 | nsp | X7R)1000PF-K/50V-1005REEL | | D011102177101S | 1 | | |
| | C2041 | nsp | X7R)0.1UF-K/16V-1005REEL | | D011104177101S | 1 | | |
| | C2042,2043 | nsp | X7R)1000PF-K/50V-1005REEL | | D011102177101S | 2 | | |
| | C2044 | nsp | C0G)9PF-D/50V-1005REEL | | D011090117101S | 1 | | |
| | C2045 | nsp | X7R)1000PF-K/50V-1005REEL | | D011102177101S | 1 | | |
| | C2046 | nsp | X7R)0.1UF-K/16V-1005REEL | | D011104177101S | 1 | | |
| | C2047,2048 | nsp | X7R)1000PF-K/50V-1005REEL | | D011102177101S | 2 | | |
| | C2049-2051 | nsp | X7R)0.1UF-K/16V-1005REEL | | D011104177101S | 3 | | |
| | C2052 | nsp | X7R)1000PF-K/50V-1005REEL | | D011102177101S | 1 | | |
| | C2053 | nsp | X7R)0.1UF-K/16V-1005REEL | | D011104177101S | 1 | | |
| | C2054,2055 | nsp | X7R)1000PF-K/50V-1005REEL | | D011102177101S | 2 | | |
| | C2056 | nsp | X7R)0.1UF-K/16V-1005REEL | | D011104177101S | 1 | | |
| | C2057 | nsp | X7R)1000PF-K/50V-1005REEL | | D011102177101S | 1 | | |
| | C2058 | nsp | X7R)0.1UF-K/16V-1005REEL | | D011104177101S | 1 | | |
| | C2059 | nsp | X7R)1000PF-K/50V-1005REEL | | D011102177101S | 1 | | |
| | C2060 | nsp | X7R)0.1UF-K/16V-1005REEL | | D011104177101S | 1 | | |
| | C2061 | nsp | X7R)1000PF-K/50V-1005REEL | | D011102177101S | 1 | | |
| | C2062,2063 | nsp | X7R)0.1UF-K/16V-1005REEL | | D011104177101S | 2 | | |
| | C2064 | nsp | X7R)1000PF-K/50V-1005REEL | | D011102177101S | 1 | | |
| | C2065 | nsp | X7R)0.1UF-K/16V-1005REEL | | D011104177101S | 1 | | |
| | C2066 | nsp | X7R)1000PF-K/50V-1005REEL | | D011102177101S | 1 | | |
| | C2067,2068 | nsp | X7R)4.7UF-K/6.3V-1608REEL | | D011475571160S | 2 | | |
| | C2071,2072 | nsp | X7R)4.7UF-K/6.3V-1608REEL | | D011475571160S | 2 | | |
| | C2073-2075 | nsp | X7R)1000PF-K/50V-1005REEL | | D011102177101S | 3 | | |
| | C2076 | nsp | X7R)0.1UF-K/16V-1005REEL | | D011104177101S | 1 | | |
| | C2077 | nsp | X7R)1000PF-K/50V-1005REEL | | D011102177101S | 1 | | |
| | C2078 | nsp | X7R)0.1UF-K/16V-1005REEL | | D011104177101S | 1 | | |
| | C2079 | nsp | X7R)1000PF-K/50V-1005REEL | | D011102177101S | 1 | | |
| | C2080 | nsp | X7R)0.1UF-K/16V-1005REEL | | D011104177101S | 1 | | |
| | C2081 | nsp | X7R)1000PF-K/50V-1005REEL | | D011102177101S | 1 | | |
| | C2082 | nsp | X7R)0.1UF-K/16V-1005REEL | | D011104177101S | 1 | | |
| | C2083-2085 | nsp | X7R)1000PF-K/50V-1005REEL | | D011102177101S | 3 | | |
| | C2086 | nsp | X7R)0.1UF-K/16V-1005REEL | | D011104177101S | 1 | | |
| | C2087 | nsp | X7R)1000PF-K/50V-1005REEL | | D011102177101S | 1 | | |
| | C2088-2092 | nsp | X7R)0.1UF-K/16V-1005REEL | | D011104177101S | 5 | | |
| | C2093 | nsp | X7R)1000PF-K/50V-1005REEL | | D011102177101S | 1 | | |
| | C2094 | nsp | X7R)0.1UF-K/16V-1005REEL | | D011104177101S | 1 | | |
| | C2095 | nsp | X7R)1000PF-K/50V-1005REEL | | D011102177101S | 1 | | |
| | C2096 | nsp | X7R)0.1UF-K/16V-1005REEL | | D011104177101S | 1 | | |
| | C2097 | nsp | X7R)1000PF-K/50V-1005REEL | | D011102177101S | 1 | | |
| | C2098 | nsp | X7R)0.1UF-K/16V-1005REEL | | D011104177101S | 1 | | |
| | C2099 | nsp | X7R)1000PF-K/50V-1005REEL | | D011102177101S | 1 | | |
| | C2100 | nsp | X7R)0.1UF-K/16V-1005REEL | | D011104177101S | 1 | | |
| | C2101 | nsp | X7R)1000PF-K/50V-1005REEL | | D011102177101S | 1 | | |
| | C2102 | nsp | X7R)0.1UF-K/16V-1005REEL | | D011104177101S | 1 | | |
| | C2103-2106 | nsp | X7R)1000PF-K/50V-1005REEL | | D011102177101S | 4 | | |
| | C2107 | nsp | X7R)0.1UF-K/16V-1005REEL | | D011104177101S | 1 | | |
| | C2108 | nsp | X7R)1000PF-K/50V-1005REEL | | D011102177101S | 1 | | |
| | C2109 | nsp | X7R)0.1UF-K/16V-1005REEL | | D011104177101S | 1 | | |
| | C2110,2111 | nsp | X7R)1000PF-K/50V-1005REEL | | D011102177101S | 2 | | |
| | C2112 | nsp | X7R)0.1UF-K/16V-1005REEL | | D011104177101S | 1 | | |
| | C2113,2114 | nsp | X7R)1000PF-K/50V-1005REEL | | D011102177101S | 2 | | |
| | C2115 | nsp | X7R)0.1UF-K/16V-1005REEL | | D011104177101S | 1 | | |
| | C2203 | nsp | X7R)0.1UF-K/16V-1005REEL | | D011104177101S | 1 | | |
| | C2204 | nsp | X7R)0.1UF-K/16V-1005REEL | X2000E1C,E2,K | D011104177101S | 1 | | |
| | C2207 | nsp | X7R)0.01UF-K/25V-1005REEL | E400E3,X2000E3 | D011103174101S | 1 | | |
| | C2211 | nsp | COG)12PF-G/50V-1005REEL GRM1555C1H120GA01D | | D0101201571100S | 1 | | |
| | C2212 | nsp | COG)15PF-G/50V-1005REEL GRM1555C1H150GA01D | | D0101501571100S | 1 | | |
| | C2213 | nsp | X7R)0.1UF-K/16V-1005REEL | | D011104177101S | 1 | | |
| | C2214 | nsp | X7R)1000PF-K/50V-1005REEL | | D011102177101S | 1 | | |
| | C2215 | nsp | X7R)4.7UF-K/6.3V-1608REEL | E400E3,X2000E3 | D011475571160S | 1 | | |
| | C2216 | nsp | X7R)0.1UF-K/16V-1005REEL | E400E3,X2000E3 | D011104177101S | 1 | | |
| | C2217,2218 | nsp | X7R)0.1UF-K/25V-1608REEL | | D011104774161S | 2 | | |
| | C2219 | nsp | X7R)0.1UF-K/16V-1005REEL | | D011104177101S | 1 | | |
| | C2220 | nsp | C0G)0.068UF-J/50V-3216REEL GRM31C5C1H683JA01L | | D0106831673005 | 1 | | |
| | C2221 | nsp | C0G)4700PF-J/50V-2012REEL GRM2165C1H472JA01D | | D0104721672005 | 1 | | |
| | C2222-2226 | nsp | X7R)0.1UF-K/16V-1005REEL | | D011104177101S | 5 | | |
| | C2228 | nsp | X7R)0.1UF-K/16V-1005REEL | | D011104177101S | 1 | | |
| | C2230-2232 | nsp | X7R)0.1UF-K/16V-1005REEL | | D011104177101S | 3 | | |
| | C2234-2237 | nsp | X7R)0.1UF-K/16V-1005REEL | | D011104177101S | 4 | | |
| | C2238 | nsp | X7R1000PF-K/50V-1608REEL | | D011102777160S | 1 | | |
| | C2239 | nsp | X7R)0.1UF-K/16V-1005REEL | | D011104177101S | 1 | | |
| | C2401-2405 | nsp | X7R)0.1UF-K/16V-1005REEL | | D011104177101S | 5 | | |
| | C2406 | nsp | X5R)2.2UF-M/6.3V-1005REEL | | D011225581100S | 1 | | |
| | C2407 | nsp | X7R)1000PF-K/50V-1005REEL | | D011102177101S | 1 | | |
| | C2408 | nsp | X7R)1UF-K/10V-1608REEL | | D011105772161S | 1 | | |
| | C2409,2410 | nsp | X7R)1000PF-K/50V-1005REEL | | D011102177101S | 2 | | |
| | C2411 | nsp | X7R)0.1UF-K/16V-1005REEL | | D011104177101S | 1 | | |
| | C2412 | nsp | X5R)2.2UF-M/6.3V-1005REEL | | D011225581100S | 1 | | |
| | C2413 | nsp | X7R)1000PF-K/50V-1005REEL | | D011102177101S | 1 | | |
| | C2414 | nsp | X7R)0.1UF-K/16V-1005REEL | | D011104177101S | 1 | | |
| | C2415,2416 | nsp | X7R)1000PF-K/50V-1005REEL | | D011102177101S | 2 | | |
| | C2418 | nsp | X7R)0.1UF-K/16V-1005REEL | | D011104177101S | 1 | | |
| | C2419 | nsp | X7R)1000PF-K/50V-1005REEL | | D011102177101S | 1 | | |
| | C2421 | nsp | X7R)1UF-K/10V-1608REEL | | D011105772161S | 1 | | |
| | C2422 | nsp | X7R)1000PF-K/50V-1005REEL | | D011102177101S | 1 | | |
| | C2424,2425 | nsp | X7R)1000PF-K/50V-1005REEL | | D011102177101S | 2 | | |
| | C2426 | 00D9630338606 | 10UF-MVG/16V,3.3*3.7*5.2 REEL (Z8154) SY | | D0501000834705 | 1 | | |
| | C2427-2432 | nsp | X7R)1000PF-K/50V-1005REEL | | D011102177101S | 6 | | |
| | C2435,2436 | nsp | X7R)1000PF-K/50V-1005REEL | | D011102177101S | 2 | | |
| | C2437,2438 | nsp | X7R)2200PF-K/50V-1005REEL | | D011222177101S | 2 | | |
| | C2439-2445 | nsp | X7R)1000PF-K/50V-1005REEL | | D011102177101S | 7 | | |
| | C2450 | nsp | X7R)1UF-K/10V-1608REEL | | D011105772161S | 1 | | |
| | C2451 | 963134000450S | 100UF-MVG/16V,6.6*7.2*5.7 REEL (Z8157) SY | | D050101083660S | 1 | | |
| | C2454-2461 | 00D2570505910 | CC73CH1H152JT +1608 | | D0101521671655 | 8 | | |
| | C2465-2468 | 00D2570507976 | CC73CH1H331JT +1608 | | D0103311671655 | 4 | | |
| | C2469,2470 | 00D2570507947 | CC73CH1H241JT +1608 | | D0102411671655 | 2 | | |
| | C2471-2476 | 00D2570507976 | CC73CH1H331JT +1608 | | D0103311671655 | 6 | | |
| | C2477,2478 | 00D2570507947 | CC73CH1H241JT +1608 | | D0102411671655 | 2 | | |
| | C2479,2480 | 00D2570507976 | CC73CH1H331JT +1608 | | D0103311671655 | 2 | | |
| | C2481,2482 | 00D9630338606 | 10UF-MVG/16V,3.3*3.7*5.2 REEL (Z8154) SY | | D0501000834705 | 2 | | |
| | C2483,2484 | nsp | X7R0.01UF-K/50V-1608REEL | | D011103777160S | 2 | | |

| | REF No. | Part No. | Part Name | Remarks | | Q'ty | New | Ver |
|---|---|---|---|---|---|---|---|---|
| | C2486 | 963134000450S | 100UF-MVG/16V,6.6*7.2*5.7 REEL (Z8157) SY | | D050101083660S | 1 | | |
| | C2488 | 963134000450S | 100UF-MVG/16V,6.6*7.2*5.7 REEL (Z8157) SY | | D050101083660S | 1 | | |
| | C2491-2495 | 00D9630338606 | 10UF-MVG/16V,3.3*3.7*5.2 REEL (Z8154) SY | | D050100083470S | 5 | | |
| | C2496 | nsp | X7R)1UF-K/10V-1608REEL | | D011105772161S | 1 | | |
| | C2498 | nsp | X7R)1UF-K/10V-1608REEL | | D011105772161S | 1 | | |
| | C2499 | 00D9630325305 | 47UF-MVG/6.3V,4*3*5.1*5.3 REEL (Z8155) SY | | D050470081460S | 1 | | |
| | C2601 | nsp | X7R)1000PF-K/50V-1005REEL | | D011102177101S | 1 | | |
| | C2602,2603 | nsp | COG)12PF-G/50V-1005REEL GRM1555C1H120GA01D | | D010120157100S | 2 | | |
| | C2605-2608 | nsp | X7R)4.7UF-K/6.3V-1608REEL | | D011475571160S | 4 | | |
| | C2609-2619 | nsp | X7R)0.1UF-K/16V-1005REEL | | D011104177101S | 11 | | |
| | C2620-2622 | nsp | X7R)1000PF-K/50V-1005REEL | | D011102177101S | 3 | | |
| | C2623 | nsp | X7R)0.1UF-K/16V-1005REEL | | D011104177101S | 1 | | |
| | C2624 | nsp | X7R)4.7UF-K/6.3V-1608REEL | | D011475571160S | 1 | | |
| | C2627-2630 | nsp | X7R)4.7UF-K/6.3V-1608REEL | | D011475571160S | 4 | | |
| | C2631-2640 | nsp | X7R)0.1UF-K/16V-1005REEL | | D011104177101S | 10 | | |
| | C2641-2643 | nsp | X7R)1000PF-K/50V-1005REEL | | D011102177101S | 3 | | |
| | C2645 | nsp | X7R)4.7UF-K/6.3V-1608REEL | | D011475571160S | 1 | | |
| | C2648 | nsp | X7R)4.7UF-K/6.3V-1608REEL | | D011475571160S | 1 | | |
| | C2653 | nsp | X7R)1000PF-K/50V-1005REEL | | D011102177101S | 1 | | |
| | C2657 | nsp | X7R)0.1UF-K/16V-1005REEL | | D011104177101S | 1 | | |
| | C2659 | nsp | X7R)0.1UF-K/16V-1005REEL | | D011104177101S | 1 | | |
| | C2660-2667 | nsp | X7R)1000PF-K/50V-1005REEL | | D011102177101S | 8 | | |
| | C2676,2677 | nsp | X7R)1000PF-K/50V-1005REEL | | D011102177101S | 2 | | |
| | C2678 | nsp | X7R)0.1UF-K/16V-1005REEL | | D011104177101S | 1 | | |
| | C2679,2680 | nsp | X7R)1000PF-K/50V-1005REEL | | D011102177101S | 2 | | |
| | C2801 | nsp | X7R0.022UF-K/25V-1608REEL | | D011223777160S | 1 | | |
| | C2803 | nsp | X7R)1UF-K/10V-1608REEL | | D011105772161S | 1 | | |
| | C2806 | nsp | X7R)0.1UF-K/16V-1005REEL | | D011104177101S | 1 | | |
| | C2807,2808 | nsp | COG)10PF-D/50V-1005REEL | | D011100117101S | 2 | | |
| | C2811 | nsp | X7R)1UF-K/10V-1608REEL | | D011105772161S | 1 | | |
| | C2812 | nsp | X7R)0.1UF-K/16V-1005REEL | | D011104177101S | 1 | | |
| | C2813 | nsp | X7R)470PF-K/50V-1005REEL | | D011471177101S | 1 | | |
| | C2814 | nsp | X7R)1UF-K/10V-1608REEL | | D011105772161S | 1 | | |
| | C2815 | nsp | X7R)1000PF-K/50V-1005REEL | | D011102177101S | 1 | | |
| | C2816 | nsp | X7R1000PF-K/50V-1608REEL | | D011102777160S | 1 | | |
| | C2817 | nsp | X7R)4.7UF-K/6.3V-1608REEL | | D011475571160S | 1 | | |
| | C2818 | nsp | X7R1000PF-K/50V-1608REEL | | D011102777160S | 1 | | |
| | C2819 | nsp | X7R)4.7UF-K/6.3V-1608REEL | | D011475571160S | 1 | | |
| | C2821 | nsp | X7R)4.7UF-K/6.3V-1608REEL | | D011475571160S | 1 | | |
| | C2823 | nsp | X7R)4.7UF-K/6.3V-1608REEL | | D011475571160S | 1 | | |
| | C2824,2825 | nsp | X7R)0.1UF-K/16V-1005REEL | | D011104177101S | 2 | | |
| | C2845 | nsp | X7R)0.1UF-K/16V-1005REEL | | D011104177101S | 1 | | |
| | C2846 | nsp | X7R)1000PF-K/50V-1005REEL | | D011102177101S | 1 | | |
| | C2853 | nsp | X7R)0.1UF-K/16V-1005REEL | | D011104177101S | 1 | | |
| | C3001 | nsp | X7R)1000PF-K/50V-1005REEL | X2000E3 | D011102177101S | 1 | | |
| | C3002 | nsp | X7R)0.1UF-K/16V-1005REEL | X2000E3 | D011104177101S | 1 | | |
| | C3003 | nsp | X7R)1000PF-K/50V-1005REEL | X2000E3 | D011102177101S | 1 | | |
| | C3009 | nsp | X7R)0.1UF-K/16V-1005REEL | | D011104177101S | 1 | | |
| | C3010 | nsp | X7R)4.7UF-K/6.3V-1608REEL | | D011475571160S | 1 | | |
| | C3011-3014 | nsp | X7R)0.1UF-K/16V-1005REEL | | D011104177101S | 4 | | |
| | C3015 | nsp | COG)12PF-J/50V-1005REEL | | D011120167101S | 1 | | |
| | C3016 | nsp | COG)15PF-J/50V-1005REEL | | D011150167101S | 1 | | |
| | C3017-3019 | nsp | X7R)0.1UF-K/16V-1005REEL | | D011104177101S | 3 | | |
| | C3021,3022 | nsp | X7R)0.1UF-K/16V-1005REEL | | D011104177101S | 2 | | |
| | C3202 | nsp | X7R)220PF-K/50V-1005REEL | | D011221177101S | 1 | | |
| | C3205,3206 | nsp | X7R)0.1UF-K/16V-1005REEL | | D011104177101S | 2 | | |
| | C3209 | nsp | X7R)0.1UF-K/16V-1005REEL | E400E3,X2000E1C,E2,K | D011104177101S | 1 | | |
| | C3210 | nsp | X7R)0.1UF-K/16V-1005REEL | | D011104177101S | 1 | | |
| | C3211 | nsp | X7R)0.01UF-K/25V-1005REEL | | D011103174101S | 1 | | |
| | C3212 | nsp | X7R)0.1UF-K/16V-1005REEL | | D011104177101S | 1 | | |
| | C3213-3216 | nsp | X7R)0.01UF-K/25V-1005REEL | | D011103174101S | 4 | | |
| | C3414-3416 | nsp | X7R)1000PF-K/50V-1005REEL | | D011102177101S | 3 | | |
| | C3417 | nsp | COG)100PF-J/50V-1005REEL | | D011101167101S | 1 | | |
| | C3418 | nsp | X7R)1000PF-K/50V-1005REEL | | D011102177101S | 1 | | |
| | C3419-3424 | nsp | COG)100PF-J/50V-1005REEL | | D011101167101S | 6 | | |
| | C3601-3605 | nsp | X7R)0.1UF-K/16V-1005REEL | | D011104177101S | 5 | | |
| | C3619-3623 | nsp | X5R)10UF-K/16V-2012REEL GRM21BR61C106KE15L | | D011106573200S | 5 | | |
| | C3625-3629 | nsp | X7R)0.01UF-K/25V-1005REEL | | D011103174101S | 5 | | |
| | C3631-3635 | nsp | X7R)0.1UF-K/16V-1005REEL | | D011104177101S | 5 | | |
| | C3637-3641 | nsp | X5R)10UF-K/16V-2012REEL GRM21BR61C106KE15L | | D011106573200S | 5 | | |
| | C3643-3648 | nsp | X5R)10UF-K/16V-2012REEL GRM21BR61C106KE15L | | D011106573200S | 6 | | |
| | C3649-3652 | nsp | COG15PF-J/50V-1608REEL | | D010150167160S | 4 | | |
| | C3653 | nsp | COG)10PF-J/50V-1608REEL | | D010100167161S | 1 | | |
| | C3667-3669 | nsp | X7R)1000PF-K/50V-1005REEL | | D011102177101S | 3 | | |
| | C3673-3676 | nsp | X7R)0.1UF-K/16V-1005REEL | | D011104177101S | 4 | | |
| | C3677 | nsp | X7R)0.01UF-K/25V-1005REEL | | D011103174101S | 1 | | |
| | C3678 | nsp | X7R)1000PF-K/50V-1005REEL | | D011102177101S | 1 | | |
| | C3682 | nsp | X7R)1000PF-K/50V-1005REEL | | D011102177101S | 1 | | |
| | C3695-3701 | nsp | X7R)0.1UF-K/16V-1005REEL | | D011104177101S | 7 | | |
| | C3744 | nsp | X7R)1UF-K/10V-1608REEL | | D011105772161S | 1 | | |
| | C3752 | nsp | X7R)1UF-K/10V-1608REEL | | D011105772161S | 1 | | |
| | C3788 | nsp | X7R0.015UF-K/50V-1608REEL | | D011153777160S | 1 | | |
| | C3789 | 00D9630325402 | 470UF-MVG/6.3V,8.3*9.0*10 REEL (Z8158) SY | | D050471081200S | 1 | | |
| | C3790 | nsp | X7R)0.1UF-K/16V-1005REEL | | D011104177101S | 1 | | |
| | C3792 | nsp | X7R)0.1UF-K/16V-1005REEL | | D011104177101S | 1 | | |
| | C3795 | nsp | X7R)1UF-K/10V-1608REEL | | D011105772161S | 1 | | |
| | C3797 | nsp | X7R)0.1UF-K/16V-1005REEL | | D011104177101S | 1 | | |
| | C3799 | nsp | X7R)0.1UF-K/16V-1005REEL | | D011104177101S | 1 | | |
| | C3802 | 963134501220S | 470UF-M/6.3V,8*10 RVO-6V471MG10P2U-R2 ELNA | | D050471081330S | 1 | | |
| | C3804 | nsp | X7R)0.1UF-K/16V-1005REEL | | D011104177101S | 1 | | |
| | | | | | | | | |
| **OTHER PARTS GROUP** | | | | | | | | |
| | K2201 | 963643003580S | RCA-107C-02(OR) | X2000E3 | G600107C0020YS | 1 | | |
| | K3001,3002 | 00D9630244703 | EARPHONE JACK PJ-308-02 | X2000E3 | G40130802000YS | 2 | | |
| | L1201-1203 | nsp | 0-J,1/10W-2012REEL | | C200000060200S | 3 | | |
| | L1301-1313 | nsp | BLM21PG221SN1 220ohm 2A SMD2012 TYPE | | D3402012122105 | 13 | | |
| | L1602 | nsp | BLM21PG221SN1 220ohm 2A SMD2012 TYPE | | D3402012122105 | 1 | | |
| | L1605-1609 | nsp | BLM21PG221SN1 220ohm 2A SMD2012 TYPE | | D3402012122105 | 5 | | |
| | L1611-1615 | nsp | BLM21PG221SN1 220ohm 2A SMD2012 TYPE | | D3402012122105 | 5 | | |
| | L1617-1619 | nsp | BLM21PG221SN1 220ohm 2A SMD2012 TYPE | | D3402012122105 | 3 | | |
| | L1801 | nsp | BLM21PG221SN1 220ohm 2A SMD2012 TYPE | | D3402012122105 | 1 | | |
| | L2601-2603 | nsp | BLM21PG221SN1 220ohm 2A SMD2012 TYPE | | D3402012122105 | 3 | | |
| | L2801,2802 | nsp | DLW21SN900HQ2L COMMON MODE CHOKE COILS SMD2012 | | D3112012190005 | 2 | | |
| | L2804 | nsp | 0-J,1/10W-2012REEL | | C200000060200S | 1 | | |
| | L2806 | nsp | DLW21SN181SQ2L COMMON MODE CHOKE COILS SMD2012 | | D3112012118105 | 1 | | |
| | L2807-2810 | 963115100320S | CBW201209U221T 220ohm SMD2012 TYPE | | D3402012022105 | 4 | | |
| | L3401-3404 | nsp | 0-J,1/10W-2012REEL | | C200000060200S | 4 | | |
| | L3601-3610 | nsp | 0-J,1/10W-2012REEL | | C200000060200S | 10 | | |
| | L3613-3622 | nsp | 0-J,1/10W-2012REEL | | C200000060200S | 10 | | |
| | L3625-3627 | nsp | BLM21PG221SN1 220ohm 2A SMD2012 TYPE | | D3402012122105 | 3 | | |

| | REF No. | Part No. | Part Name | Remarks | | Q'ty | New | Ver |
|---|---|---|---|---|---|---|---|---|
| | L3628,3629 | nsp | CBW160808U121T 120ohm SMD1608 TYPE | | D340160811210S | 2 | | |
| | N1001-1004 | 963612504750D | AD3PBC19G0-T 3ROW 19P DIP HDMICON R/A W/FLANGE | | L109100190190S | 4 | | |
| | N1201 | 963612504750D | AD3PBC19G0-T 3ROW 19P DIP HDMICON R/A W/FLANGE | | L109100190190S | 1 | | |
| | N1202 | nsp | 1.0-16-23PB-2 23P ST SMT (JSY) | | L130100162330S | 1 | | |
| | N1301 | nsp | 1.0-16-23PB-2 23P ST SMT (JSY) | | L130100162330S | 1 | | |
| | N1302 | 963612504750D | AD3PBC19G0-T 3ROW 19P DIP HDMICON R/A W/FLANGE | | L109100190190S | 1 | | |
| | N1303 | 963612504750D | AD3PBC19G0-T 3ROW 19P DIP HDMICON R/A W/FLANGE | X2000E1C,E2,E3,K | L109100190190S | 1 | | |
| | N1602 | 963612504750D | AD3PBC19G0-T 3ROW 19P DIP HDMICON R/A W/FLANGE | | L109100190190S | 1 | | |
| | N2801 | nsp | 20010WS-05A00 DIP5P STRAIGHT | | L101200100510S | 1 | | |
| | N2802 | 963643100130S | RJ45 1*1W/TRANSFORMER W/O LED 99TA-03188400023101 | | G4060RJ450120S | 1 | | |
| | N3201 | nsp | 1.0-9-4PW 4P AN DIP TOP CONTACT | E400E3,X2000E1C,E2,K | L130100090450S | 1 | | |
| | N3401 | nsp | C125Z2-13 13P BtoB SOCKET(FEMALE) P=1.25MM | | L109012521320S | 1 | | |
| | N3403 | nsp | C125Z2-31 31P BtoB SOCKET(FEMALE) P=1.25MM | | L109012523120S | 1 | | |
| | N3404 | nsp | C125Z2-13 13P BtoB SOCKET(FEMALE) P=1.25MM | | L109012521320S | 1 | | |
| | N3405 | nsp | 20010WS-05A00 DIP5P STRAIGHT | | L101200100510S | 1 | | |
| | N3406 | nsp | C125Z2-07 7P BtoB SOCKET(FEMALE) P=1.25MM | | L109012520720S | 1 | | |
| | N3407 | nsp | C125Z2-25 25P BtoB SOCKET(FEMALE) P=1.25MM | | L109012522520S | 1 | | |
| | N3408 | nsp | 1.0-15-40PB 40P VER SMT | | L130100154030S | 1 | | |
| | N3601 | nsp | SMW250-5P DIP ST | | L102050010040S | 1 | | |
| | X1301 | 963141100910S | 27.000MHz CL=7PF XS-3225 SMD3225 ECEC | | E80527R000090S | 1 | * | |
| | X1601 | 963141100910S | 27.000MHz CL=7PF XS-3225 SMD3225 ECEC | | E80527R000090S | 1 | * | |
| | X2001 | 963141100930S | 21.875MHz CL=8PF XS-3225 SMD3225 ECEC | | E80521R875090S | 1 | * | |
| | X2201 | 963141100940S | 24.576MHz CL=10PF XS-3225 SMD3225 ECEC | | E80524R576190S | 1 | * | |
| | X2601 | 963141100950S | 24.000MHz CL=8PF XS-3225 SMD3225 ECEC | | E80524R000190S | 1 | * | |
| | X3001 | 963141100960S | 12.000MHz CL=10PF XG-5032 SMD5032 ECEC | | E80512R000290S | 1 | * | |

**EXPLODED6 PCB ASS'Y**

**NOTE:** The symbols in the column "Remarks" indicate the following destinations.
E400E3 : U.S.A. & Canada model
X2000E3 : U.S.A. & Canada model X2000E2 : Europe model X2000E1C : China model X2000E1 : Asia model X2000K : Japan model

| | REF No. | Part No. | Part Name | Remarks | | Q'ty | New | Ver |
|---|---|---|---|---|---|---|---|---|
| | P1 | nsp | AVRE400BKE3(DENON)/FRONT_HDMI | | 7028072982010 | 1 | * | |
| | P2 | - | - | - | - | - | | |
| | P3 | nsp | AVRE400BKE3(DENON)/FRONT | E400E3 | 7028072931010 | 1 | * | |
| | P3 | nsp | AVRX2000BKE3(DENON)/FRONT | X2000E3 | 7028072931020 | 1 | * | |
| | P3 | nsp | AVRE400BKE3(DENON)/FRONT | X2000E2,E1,K,E1C | 7028072931010 | 1 | * | |
| | P4 | nsp | AVRE400BKE3(DENON)/FUNCTION | E400E3 | 7028072932010 | 1 | * | |
| | P4 | nsp | AVRX2000BKE3(DENON)/FUNCTION | X2000E3,E2,E1,K,E1C | 7028072932020 | 1 | * | |
| | P5 | nsp | AVRE400BKE3(DENON)/CNT | | 7028072933010 | 1 | * | |
| | P6 | nsp | AVRE400BKE3(DENON)/F/H_GUIDE | | 7028072937010 | 1 | * | |
| | P7 | nsp | AVRE400BKE3(DENON)/7CH_AMP | | 7028072971010 | 1 | * | |
| | P8 | nsp | AVRE400BKE3(DENON)/SMPS | E400E3 | 7028072961010 | 1 | * | |
| | P8 | nsp | AVRX2000BKE3(DENON)/SMPS | X2000E3 | 7028072961020 | 1 | * | |
| | P8 | nsp | AVRX2000BKE2(DENON)/SMPS | X2000E2,E1 | 7028072961030 | 1 | * | |
| | P8 | nsp | AVRX2000K(DENON)/SMPS | X2000K | 7028072961040 | 1 | * | |
| | P8 | nsp | AVRX2000BKE2(DENON)/SMPS | X2000E1C | 7028072961030 | 1 | * | |
| | P9 | nsp | AVRE400BKE3(DENON)/MAIN | | 7028072921010 | 1 | * | |
| | P10 | nsp | AVRE400BKE3(DENON)/INPUT | E400E3 | 7028072951010 | 1 | * | |
| | P10 | nsp | AVRX2000BKE3(DENON)/INPUT | X2000E3,E2,E1,K,E1C | 7028072951020 | 1 | * | |
| | P11 | nsp | AVRE400BKE3(DENON)/FRONT_CNT | | 7028072942010 | 1 | * | |
| | P12 | nsp | AVRE400BKE3(DENON)/VIDEO | E400E3 | 7028072941010 | 1 | * | |
| | P12 | nsp | AVRX2000BKE3(DENON)/VIDEO | X2000E3,E2,E1,K,E1C | 7028072941020 | 1 | * | |
| | P13 | 9U6391008300D | AVRE400BKE3(DENON)/HDMI | E400E3 | 7025HK1115026 | 1 | * | 2 |
| | P13 | 9U6391008400D | AVRX2000BKE3(DENON)/HDMI | X2000E3 | 7025HK1015106 | 1 | * | 2 |
| | P13 | 9U6391008500D | AVRX2000BKE2(DENON)/HDMI | X2000E2,E1 | 7025HK1015096 | 1 | * | 2 |
| | P13 | 9U6391008700D | AVRX2000K(DENON)/HDMI | X2000K | 7025HK1015086 | 1 | * | 2 |
| | P13 | 9U6391008600D | AVRX2000SPE1C(DENON)/HDMI | X2000E1C | 7025HK1015076 | 1 | * | 2 |
| | P14 | nsp | AVRX2000BKE3(DENON)/RS232 | X2000E3 | 7028072943020 | 1 | * | |
| | P15 | nsp | AVRX2000BKE3(DENON)/RS_CNT | X2000E3 | 7028072944020 | 1 | * | |
| | P17 | nsp | AVRE400BKE3(DENON)/GUIDE_L | | 7028072934010 | 1 | * | |
| | P18 | nsp | AVRE400BKE3(DENON)/TOP_GUIDE | | 7028072936010 | 1 | * | |
| | 1 | 963422100570D | PANEL SUB | E400E3,X2000E3,E2,E1,K | 3067215921000S | 1 | * | |
| | 2 | 963412100730D | KNOB VOLUME (BK) | X2000E3,E2,E1,K | 5080212641000S | 1 | | 3 |
| | 2 | 963412100740D | KNOB VOLUME (SP) | X2000E1C | 5087212641100S | 1 | | 3 |
| | 4 | 963416100970D | WINDOW DISPLAY | E400E3 | 5077213333030S | 1 | * | |
| | 4 | 963416100980D | WINDOW DISPLAY | X2000E3,E2,E1,K,E1C | 5077213333040S | 1 | * | |
| | 5 | 42151002100AD | DENON BADGE(BK) | E400E3,X2000E3,E2,E1,K | 5637210838000S | 1 | | |
| | 5 | 42151002101AD | DENON BADGE(SP) | X2000E1C | 5637210838010S | 1 | | |
| | 6 | 963402103400D | AVRE-400(BKE3) PANEL FRONT | E400E3 | 3067215551100S | 1 | * | |
| | 6 | 963402103410D | AVRX-2000(BKE3) PANEL FRONT | X2000E3 | 3067216021000S | 1 | * | 4 |
| | 6 | 963402103420D | AVR-X2000(BKE2) PANEL FRONT | X2000E2,E1 | 3067215561400S | 1 | * | |
| | 6 | 963402103430D | AVR-X2000(BK) PANEL FRONT | X2000K | 3067215561410S | 1 | * | |
| | 6 | 963402103440D | AVR-X2000(SPE1C) PANEL FRONT | X2000E1C | 3067215561500S | 1 | * | |
| | 7 | 963402103910D | BUTTON-ASSY POWER (BLACK) | E400E3,X2000E3,E2,E1,K | 5098215301000SZ | 1 | * | 4 |
| | 7 | 963402103911D | BUTTON-ASSY POWER (SILVE) | X2000E1C | 5098215301100SZ | 1 | * | 4 |
| | 8 | 963481100240D | LENS STANDBY | | 3710211283000S | 1 | | |
| | 9 | 963411101780D | BUTTON 10KEY | | 5090215001000S | 1 | | |
| | 10 | nsp | BRACKET HDMI FRONT | | 4010215806000S | 1 | | |
| | 11 | nsp | PLATE USB | | 4470212696000S | 1 | | |
| | 12 | nsp | CHASSIS MAIN | | 3200214626000S | 1 | | |
| ! | 13 | 963101101360S | AVR2113 BKE3(DENON) MAIN TRANS | E400E3,X2000E3 | 8200960611240S | 1 | | |
| ! | 13 | 963101101370S | AVR2113 BKE2(DENON) MAIN TRANS | X2000E2,E1 | 8200960611250S | 1 | | |
| ! | 13 | 963101101520D | AVR2113 K(DENON) MAIN TRANS | X2000K | 8200960611260S | 1 | | |
| ! | 13 | 963101101510D | AVR2113 SPE1C(DENON) MAIN TRANS | X2000E1C | 8200960611270S | 1 | | |
| | 14 | nsp | SUPPORTER PCB | | 4070001601010S | 1 | | |
| | 15 | 00D9630214607 | CUSHION FOOT | | 4050211295000S | 4 | | |
| | 16 | 963407100030D | FOOT | E400E3 | 4000210641000S | 4 | | |
| | 16 | 963407100200D | FOOT | X2000E3,E2,E1,K,E1C | 4000210261000S | 4 | | |
| | 17 | nsp | AVR-E400(BKE3) CHASSIS BACK | E400E3 | 3207214636000S | 1 | | |
| | 17 | nsp | AVR-X2000(BKE3) CHASSIS BACK | X2000E3 | 3207214636100S | 1 | | |
| | 17 | nsp | AVR-X2000(BKE2) CHASSIS BACK | X2000E2,E1 | 3207214636200S | 1 | | |
| | 17 | nsp | AVR-X2000(BKK) CHASSIS BACK | X2000K | 3207214636300S | 1 | | |
| | 17 | nsp | AVR-X2000(SPE1C) CHASSIS BACK | X2000E1C | 3207214636310S | 1 | | |
| | 18 | nsp | STOPPER AC CORD | E400E3,X2000E1C | 4380040162010S | 1 | | |
| | 18 | nsp | STOPPER AC CORD | X2000K | 4380040162010S | 1 | | |
| ! | 19 | 00D9630292205 | CORD ASSY | E400E3 | L068125100320S | 1 | | |
| ! | 19 | 963611500570D | CORD ASSY | X2000K | L068125071890S | 1 | | |
| ! | 19 | 963611500410S | CORD ASSY | X2000E1C | L068250060070S | 1 | | |
| | 20 | nsp | HEATSINK MAIN | | 2120212048000S | 1 | | |
| | 21 | nsp | BRACKET PCB | | 4010056906010S | 3 | | |
| | 22 | nsp | BRACKET SMPS | | 401021488600DS | 1 | | |
| | 23 | nsp | CABINET TOP | E400E3,X2000E3,E2,E1,K | 3007212026000S | 1 | | |
| | 23 | nsp | CABINET TOP | X2000E1C | 3007212026010S | 1 | | |
| | 24 | 963412101090D | KNOB FUNCTION (BK) | X2000E3,E2,E1,K | 5080212631000S | 1 | | 3 |
| | 24 | 963412101091D | KNOB FUNCTION (SP) | X2000E1C | 5087212631100S | 1 | | 3 |
| | 25 | nsp | CUSHION CABINET SIDE | | 4050213095000S | 1 | | |
| | 26 | nsp | SHEET RATING CHASSIS | | 1210211909000S | 1 | | |
| | 27 | nsp | AVR1911BKE3(DENON) RUBBER(HARDNESS50~70)BK/SCREW | | 4050213025000S | 3 | | |
| | 28 | nsp | AVR-E400(BKE3) LABEL POP | E400E3 | 5507000011580S | 1 | * | |
| | 28 | nsp | AVR-X2000(BKE3) LABEL POP | X2000E3 | 5507000011960S | 1 | * | |
| | 28 | nsp | AVR-X2000(BKE2) LABEL POP | X2000E2 | 5507000011970S | 1 | * | |
| | 28 | nsp | AVR-X2000(BKE1) LABEL POP | X2000E1 | 5507000013370S | 1 | * | |
| | 28 | nsp | AVR-X2000(BK) LABEL POP | X2000K | 5507000012800S | 1 | * | |
| | 28 | nsp | AVR-X2000(SPE1C) LABEL POP | X2000E1C | 5507000012810S | 1 | * | |
| | 30 | 963451101130D | SHEET PET CLEAR | | 1210211919000S | 1 | | |
| | 31 | nsp | TAPE(NITTO#500) | | A710000520000S | 1 | | |
| | 32 | 963451101140D | SHEET PET CLEAR FUNCTION | X2000E3,E2,E1,K,E1C | 1210211939000S | 1 | | |
| | 33 | nsp | GASKET | | 4400210609000S | 1 | | |
| | 34 | nsp | SPRING KNOB | | 372021027600DS | 1 | | |
| | 35 | 42141002600AD | IN-COMMAND BADGE | X2000E3 | - | 1 | | 2 |
| | A | nsp | SCREW(+2S 3X8 ZNW/BH) | | B020030081B10S | 60 | | |
| | B | nsp | SCREW(+2S 3X6 ZNW/BH) | | B020030061B10S | 4 | | |
| | D | nsp | SCREW(+2S 3X6 ROUND BK/BH) | | B020230063B10S | 6 | | |
| | G | nsp | SCREW(+3S 4X10 P+S WASHER ROUND ZNW/BH) | | B028940101B11S | 4 | | |
| | H | nsp | SCREW(+2S 3X14 P+S WASHER ZNW/HH) | | B018230141H11D | 21 | | |
| | I | nsp | SCREW(+2S 3X17 ZNW/BH) | | B020030171B10S | 1 | | |
| | J | nsp | SCREW(+2S 4X8 BK/BH DOT) | E400E3,X2000E3,E2,E1,K | 1500040083B10S | 6 | | |
| | J | nsp | SCREW(+2S 4X8 NI/BH DOT) | X2000E1C | 1500040084B10S | 6 | | |
| | K | nsp | SCREW(+2S 3X10 BK/BH DOT) | | B020030103B11D | 26 | | |
| | L | nsp | SCREW(+3S 3X6(DOT)BK/BH) | | B020930063B10S | 10 | | |
| | ★ | nsp | TAPE | | 1220211459000S | 2 | | |
| | ★ | nsp | CLAMP | | 4330040343010S | 6 | | |
| | ★ | nsp | SCREW,TAP TITE | | B020030081B10D | 27 | | |
| | ★ | nsp | SCREW,TAP TITE | | B020030083B11S | 24 | | |
| | ★ | 963606501980S | CABLE,FLAT CARD SHIELD 1.0MM | | N713232312480S | 1 | | |
| | ★ | 963606502000S | CABLE,FLAT CARD SHIELD 1.0MM | | N713401912480S | 1 | | |

| | REF No. | Part No. | Part Name | Remarks | | Q'ty | New | Ver |
|---|---|---|---|---|---|---|---|---|
| | ★ | nsp | FELT | E400 | 2690210369000S | 1 | | |
| | ★ | nsp | CLAMP | | 4330210189000S | 1 | | |
| | ★ | nsp | TAPE | | A710000270000S | 0.31 | | |
| | ★ | nsp | SCREW,TAP TITE | | B020030081B10D | 25 | | |
| | ★ | nsp | TAPE | | 1220211409000S | 1 | | |
| | ★ | nsp | SHIELD | | 3070210596000S | 1 | | |
| | ★ | nsp | BRACKET | | 4010214916000S | 1 | | |
| | ★ | nsp | BRACKET ASSY | | 4018214916000 | 2 | | |
| | ★ | nsp | LABEL | X2000E2,E1,E1C | 5507000006790S | 1 | | |
| | ★ | nsp | LABEL | X2000E2,E1,E1C | 5507000006800S | 1 | | |

**PAKING PCB ASS'Y**

**NOTE:** The symbols in the column "Remarks" indicate the following destinations.
E400E3 : U.S.A. & Canada model
X2000E3 : U.S.A. & Canada model X2000E2 : Europe model X2000E1C : China model X2000E1 : Asia model X2000K : Japan model

| | REF No. | Part No. | Part Name | Remarks | | Q'ty | New | Ver |
|---|---|---|---|---|---|---|---|---|
| | 1 | | | | | | | |
| | 2 | 54111101400AD | GETTING STARTED (E3) | E400E3 | 5707000007690S | 1 | * | |
| | 2 | 54111101500AD | GETTING STARTED (E3) | X2000E3 | 5707000007700S | 1 | * | |
| | 2 | 54111101600AD | GETTING STARTED (E2) | X2000E2,E1,E1 | 5707000007710S | 1 | * | |
| | 2 | 54111101700AD | GETTING STARTED (JP) | X2000K | 5707000007720S | 1 | * | |
| | 2 | 54111101800AD | GETTING STARTED (E1C) | X2000E1C | 5707000007730S | 1 | * | |
| | 3 | 30701013800AD | REMOTE CONTROL | | 8300118300010S | 1 | * | |
| | 4 | 963533101700D | CUSHION SNOW | | 6230213394000S | 1 | * | |
| | 5 | nsp | POLY BAG | | 6337000240010S | 1 | | |
| | 6 | nsp | PE,SHEET | | 6327040059000S | 1 | | |
| | 7 | nsp | CARD PASS | X2000E1C | 5777000000020S | 1 | | |
| | 8 | 963116100080S | FM ANTENNA WIRE | | E605010140020S | 1 | | |
| | 9 | nsp | BATTERY | | G670001R50241S | 1 | | |
| | 10 | 963531103380D | BOX GIFT | E400E3 | 6007212460000S | 1 | * | |
| | 10 | 963531103390D | BOX GIFT | X2000E3 | 6007212470000S | 1 | * | |
| | 10 | 963531103400D | BOX GIFT | X2000E2 | 6007212470010S | 1 | * | 4 |
| | 10 | 963531103410D | BOX GIFT | X2000E1 | 6007212460010S | 1 | * | |
| | 10 | 963531103420D | BOX GIFT | X2000K | 6007212470020S | 1 | * | |
| | 10 | 963531103430D | BOX GIFT | X2000E1C | 600721247003-0S | 1 | * | |
| | 11 | nsp | TAPE PACKING W:50(NEW TAPE:4.5kgf) | | 1220210772000S | 1 | | |
| | 12 | nsp | CARD S.S. LIST | X2000K | 577720004001DS | 1 | | |
| | 13 | nsp | WARRANTY CARD | X2000K | 5727001130021S | 1 | | |
| | 15 | 32401000800AD | MIC CONDESER | | M040000310080S | 1 | | |
| | 16 | nsp | WARRANTY CARD NOTICE | X2000K | 5727001130021S | 1 | | |
| | 16 | nsp | WARRANTY CARD | X2000K | 5727000002002S | 1 | | |
| | 16 | nsp | WARRANTY CARD | X2000E1C | 5727000000401S | 1 | | |
| | 17 | 35201021300AD | INST. MANUAL(CD-ROM E3) | E400E3 | 6517000001160S | 1 | * | |
| | 17 | 35201021400AD | INST. MANUAL(CD-ROM E3) | X2000E3 | 6517000001170S | 1 | * | |
| | 17 | 35201021500AD | INST. MANUAL(CD-ROM E2) | X2000E2,E1 | 6517000001180S | 1 | * | |
| | 17 | 35201021700AD | INST. MANUAL(CD-ROM JP) | X2000K | 6517000001190S | 1 | * | |
| | 17 | 35201021800AD | INST. MANUAL(CD-ROM E1C) | X2000E1C | 6517000001200S | 1 | * | |
| | 18 | nsp | LABEL SHIPPING | E400E3 | 5500000011530S | 1 | * | |
| | 18 | nsp | LABEL SHIPPING | X2000E3 | 5500000011540S | 1 | * | |
| | 18 | nsp | LABEL SHIPPING | X2000E2 | 5500000011550S | 1 | * | |
| | 18 | nsp | LABEL SHIPPING | X2000E1 | 5500000013380S | 1 | * | |
| | 18 | nsp | LABEL SHIPPING | X2000K | 5500000011560S | 1 | * | |
| | 18 | nsp | LABEL SHIPPING | X2000E1C | 5500000011570S | 1 | * | |
| | 20 | nsp | BUSHING | X2000E2,E1,E1C | 2410040353010S | 1 | | |
| | 21 | 963419100540D | LABEL SPEAKER WIRE | | 5507000011980S | 1 | * | |
| ! | 27 | 90M-ZC000470R | AC CORD | X2000E3 | L068125130020S | 1 | | |
| ! | 27 | 90M-ZC000600R | AC CORD | X2000E2,E1 | L068250160120S | 1 | | |
| | 28 | 963116100070S | AM ANTENNA WIRE | E400E3,X2000E3 | E605019000030S | 1 | * | |
| | 29 | nsp | COLOR LABEL | X2000E1C | 5507000004600S | 1 | | |

**Model : AVRE400E3_AVRX2000ALL**

**Ver.5 Modification notice**

**Date : 2013/Sep. /04**

| Symbol | Page | Description | Before the change | After the change | Remarks |
|---|---|---|---|---|---|
| | PL_EXPLODED_Sheet | Addition of parts.(P21-Q409) | - | 963219003340S KTC3964/TO126S-BULK | - |
| | PL_EXPLODED_Sheet | Addition of parts.(P21-Q421) | - | 963219003340S KTC3964/TO126S-BULK | - |
| | PL_EXPLODED_Sheet | Addition of parts.(P21-Q433) | - | 963219003340S KTC3964/TO126S-BULK | - |
| | PL_EXPLODED_Sheet | Addition of parts.(P21-Q445) | - | 963219003340S KTC3964/TO126S-BULK | - |
| | PL_EXPLODED_Sheet | Addition of parts.(P21-Q457) | - | 963219003340S KTC3964/TO126S-BULK | - |
| | PL_EXPLODED_Sheet | Addition of parts.(P21-Q469) | - | 963219003340S KTC3964/TO126S-BULK | - |
| | PL_EXPLODED_Sheet | Addition of parts.(P21-Q481) | - | 963219003340S KTC3964/TO126S-BULK | - |
| | PL_EXPLODED_Sheet | Addition of parts.(P20-Q404) | - | 00D9960018706 TR NPN 2SD2390-Y (2SD2390-Y and 2SB1560-Y is one pair parts.) | - |
| | PL_EXPLODED_Sheet | Addition of parts.(P20-Q416) | - | 00D9960018706 TR NPN 2SD2390-Y (2SD2390-Y and 2SB1560-Y is one pair parts.) | - |
| △6 | PL_EXPLODED_Sheet | Addition of parts.(P20-Q428) | - | 00D9960018706 TR NPN 2SD2390-Y (2SD2390-Y and 2SB1560-Y is one pair parts.) | - |
| | PL_EXPLODED_Sheet | Addition of parts.(P20-Q440) | - | 00D9960018706 TR NPN 2SD2390-Y (2SD2390-Y and 2SB1560-Y is one pair parts.) | - |
| | PL_EXPLODED_Sheet | Addition of parts.(P20-Q452) | - | 00D9960018706 TR NPN 2SD2390-Y (2SD2390-Y and 2SB1560-Y is one pair parts.) | - |
| | PL_EXPLODED_Sheet | Addition of parts.(P20-Q464) | - | 00D9960018706 TR NPN 2SD2390-Y (2SD2390-Y and 2SB1560-Y is one pair parts.) | - |
| | PL_EXPLODED_Sheet | Addition of parts.(P20-Q476) | - | 00D9960018706 TR NPN 2SD2390-Y (2SD2390-Y and 2SB1560-Y is one pair parts.) | - |
| | PL_EXPLODED_Sheet | Addition of parts.(P22-Q410) | - | 00D9960018706 TR PNP 2SB1560-Y (2SD2390-Y and 2SB1560-Y is one pair | - |
| | PL_EXPLODED_Sheet | Addition of parts.(P22-Q422) | - | 00D9960018706 TR PNP 2SB1560-Y (2SD2390-Y and 2SB1560-Y is one pair | - |
| | PL_EXPLODED_Sheet | Addition of parts.(P22-Q434) | - | 00D9960018706 TR PNP 2SB1560-Y (2SD2390-Y and 2SB1560-Y is one pair | - |
| | PL_EXPLODED_Sheet | Addition of parts.(P22-Q446) | - | 00D9960018706 TR PNP 2SB1560-Y (2SD2390-Y and 2SB1560-Y is one pair | - |
| | PL_EXPLODED_Sheet | Addition of parts.(P22-Q458) | - | 00D9960018706 TR PNP 2SB1560-Y (2SD2390-Y and 2SB1560-Y is one pair | - |
| | PL_EXPLODED_Sheet | Addition of parts.(P22-Q470) | - | 00D9960018706 TR PNP 2SB1560-Y (2SD2390-Y and 2SB1560-Y is one pair | - |
| | PL_EXPLODED_Sheet | Addition of parts.(P22-Q482) | - | 00D9960018706 TR PNP 2SB1560-Y (2SD2390-Y and 2SB1560-Y is one pair | - |

**Ver.5 Modification notice**

**Date : 2013/Jul. /12**

| Symbol | Page | Description | Before the change | After the change | Remarks |
|---|---|---|---|---|---|
| △5 | 56 | Correction of USB Update button. | "STATUS" + "OPTION" | "STATUS" and "SOURCE SELECT <" (AVR-E400)<br>"STATUS" and "TUNER PRESET CH-" (AVR-X2000) | - |

**Ver.4 Modification notice**

**Date : 2013/May /23**

| Symbol | Page | Description | Before the change | After the change | Remarks |
|---|---|---|---|---|---|
| 4 | 1, 14, 143 | Addition of "Caution:Replacement of Front panel" | - | - | - |
| 4 | 173- | Modification of "PARTS LIST-EXPLODED".<br>・BUTTON-ASSY POWER (BLACK)/(SILVER)<br><br>Correction of error writing."PARTS LIST - | BUTTON-ASSY POWER (BLACK):963411101800D<br>BUTTON-ASSY POWER (SILVE):963411101790D<br><br>C4006, C4011, C4017 | 963402103910D<br>963402103911D<br><br>nsp | - |

**Ver.3 Modification notice**

**Date : 2013/Apr./26**

| | | | | | |
|---|---|---|---|---|---|
| △3 | 173- | Replacement of "PARTS LIST". | KNOB VOLUME X2000E1C<br>KNOB VOLUME<br><br>963412100730D KNOB FUNCTION<br>nsp KNOB FUNCTION<br><br>INST. MANUAL(CD-ROM E2) DISC-2 | KNOB VOLUME (BK) X2000E3,E2,E1,K<br>KNOB VOLUME (SP) X2000E1C<br><br>963412101090D KNOB FUNCTION (BK)<br>963412101091D KNOB FUNCTION (SP)<br><br>-delete- | - |

**Ver.2 Modification notice**

**Date : 2013/Apr./1**

| | | | | | |
|---|---|---|---|---|---|
| △2 | 98 | Addition of Clock flow chart. | - | - | - |
| | 119- | Replacement of Schematic diagram.<br>Correction of signal-line, etc. | - | - | - |
| | 173- | Replacement of "PARTS LIST".<br>Fixed part number. | - | - | - |