DENON PROFESSIONAL

Ver. 2

Please refer to the MODIFICATION NOTICE.

SERVICE MANUAL

MODEL	JP	E3	E2	EK	EA	E1	E1K	E1C
DN-500REM		✓	✓		✓			

SD / USB Recorder

• For purposes of improvement, specifications and design are subject to change without notice.

• Please use this service manual with referring to the operating instructions without fail.

• Some illustrations using in this service manual are slightly different from the actual set.

D&M Holdings Inc.

S0766-1V02DM/DG1310

Copyright 2013 D&M Holdings Inc. All rights reserved.
WARNING: Violators will be prosecuted to the maximum extent possible.

CONTENTS

SAFETY PRECAUTIONS 3
NOTE FOR SCHEMATIC DIAGRAM 4
NOTE FOR PARTS LIST 4
TECHNICAL SPECIFICATIONS 5
DIMENSION 5
CAUTION IN SERVICING 6
DISASSEMBLY 7
1. TOP COVER 8
2. FRONT PANEL SUB ASSY 9
3. MAIN PWB 11
4. INPUT PWB 11
5. AUDIO PWB 12
6. REMOTE PWB and SMPS PWB 12
SPECIAL MODE 13
Special mode setting button 13
Exit Special mode 13
PASSWORD CLEARED METHOD 18
ERROR TABLE 19
WHEN THE MICROPROCESSOR IS REPLACED WITH A NEW ONE 21
PROCEDURE FOR UPGRADING THE VERSION OF THE FIRMWARE 21
1. Procedure for upgrading firmware 21
TROUBLE SHOOTING 22
BLOCK DIAGRAM 36
POWER BLOCK DIAGRAM 37
Level DIAGRAM 38
WIRING DIAGRAM 39
PRINTED WIRING BOARDS 40
SCHEMATIC DIAGRAMS 43
SCHEMATIC DIAGRAMS (1/9) 43
MAIN UNIT (1/2) 43
SCHEMATIC DIAGRAMS (2/9) 44
MAIN UNIT (2/2) 44
SCHEMATIC DIAGRAMS (3/9) 45
INPUT (1/2) 45
SCHEMATIC DIAGRAMS (4/9) 46
INPUT (2/2) 46
SCHEMATIC DIAGRAMS (5/9) 47
PANEL UNIT 47
SCHEMATIC DIAGRAMS (6/9) 48
AUDIO UNIT (1/2) LINEOUT 48
SCHEMATIC DIAGRAMS (7/9) 49
AUDIO UNIT (2/2) HP 49
SCHEMATIC DIAGRAMS (8/9) 50
REMOTE UNIT 50
SCHEMATIC DIAGRAMS (9/9) 51
SMPS UNIT 51
EXPLODED VIEW 52
PACKING VIEW 53
SEMICONDUCTORS 54
1. IC's 54
2. DISPLAY 68

SAFETY PRECAUTIONS

The following items should be checked for continued protection of the customer and the service technician.

leakage current check

Before returning the set to the customer, be sure to carry out either (1) a leakage current check or (2) a line to chassis resistance check. If the leakage current exceeds 0.5 milliamps, or if the resistance from chassis to either side of the power cord is less than 460 kohms, the set is defective.

Be sure to test for leakage current with the AC plug in both polarities, in addition, when the set's power is in each state (on, off and standby mode), if applicable.

CAUTION Please heed the following cautions and instructions during servicing and inspection.

◎ **Heed the cautions!**

Cautions which are delicate in particular for servicing are labeled on the cabinets, the parts and the chassis, etc. Be sure to heed these cautions and the cautions described in the handling instructions.

◎ **Cautions concerning electric shock!**

(1) An AC voltage is impressed on this set, so if you touch internal metal parts when the set is energized, you may get an electric shock. Avoid getting an electric shock, by using an isolating transformer and wearing gloves when servicing while the set is energized, or by unplugging the power cord when replacing parts, for example.

(2) There are high voltage parts inside. Handle with extra care when the set is energized.

◎ **Caution concerning disassembly and assembly!**

Through great care is taken when parts were manufactured from sheet metal, there may be burrs on the edges of parts. The burrs could cause injury if fingers are moved across them in some rare cases. Wear gloves to protect your hands.

◎ **Use only designated parts!**

The set's parts have specific safety properties (fire resistance, voltage resistance, etc.). Be sure to use parts which have the same properties for replacement. The burrs have the same properties. In particular, for the important safety parts that are indicated by the ⚠ mark on schematic diagrams and parts lists, be sure to use the designated parts.

◎ **Be sure to mount parts and arrange the wires as they were originally placed!**

For safety seasons, some parts use tapes, tubes or other insulating materials, and some parts are mounted away from the surface of printed circuit boards. Care is also taken with the positions of the wires by arranging them and using clamps to keep them away from heating and high voltage parts, so be sure to set everything back as it was originally placed.

◎ **Make a safety check after servicing!**

Check that all screws, parts and wires removed or disconnected when servicing have been put back in their original positions, check that no serviced parts have deteriorate the area around. Then make an insulation check on the external metal connectors and between the blades of the power plug, and otherwise check that safety is ensured.

(Insulation check procedure)

Unplug the power cord from the power outlet, disconnect the antenna, plugs, etc., and on the power. Using a 500V insulation resistance tester, check that the insulation resistance value between the inplug and the externally exposed metal parts (antenna terminal, headphones terminal, input terminal, etc.) is 1MΩ or greater. If it is less, the set must be inspected and repaired.

CAUTION Concerning important safety parts

Many of the electric and the structural parts used in the set have special safety properties. In most cases these properties are difficult to distinguish by sight, and the use of replacement parts with higher ratings (rated power and withstand voltage) does not necessarily guarantee that safety performance will be preserved. Parts with safety properties are indicated as shown below on the wiring diagrams and the parts list in this service manual. Be sure to replace them with the parts which have the designated part number.

(1) Schematic diagrams.....Indicated by the ⚠ mark.

(2) Parts lists.....Indicated by the ⚠ mark.

The use of parts other than the designated parts could cause electric shocks, fires or other dangerous situations.

NOTE FOR SCHEMATIC DIAGRAM

WARNING:

Parts indicated by the z mark have critical characteristics. Use ONLY replacement parts recommended by the manufacturer.

CAUTION:

Before returning the set to the customer, be sure to carry out either (1) a leakage current check or (2) a line to chassis resistance check. If the leakage current exceeds 0.5 milliamps, or if the resistance from chassis to either side of the power cord is less than 460 kohms, the set is defective.

WARNING:

DO NOT return the set to the customer unless the problem is identified and remedied.

NOTICE:

ALL RESISTANCE VALUES IN OHM. k=1,000 OHM / M=1,000,000 OHM

ALL CAPACITANCE VALUES ARE EXPRESSED IN MICRO FARAD, UNLESS OTHERWISE INDICATED. P INDICATES MICRO-MICRO FARAD. EACH VOLTAGE AND CURRENT ARE MEASURED AT NO SIGNAL INPUT CONDITION. CIRCUIT AND PARTS ARE SUBJECT TO CHANGE WITHOUT PRIOR NOTICE.

NOTE FOR PARTS LIST

1. Parts indicated by "nsp" on this table cannot be supplied.
2. When ordering a part, make a clear distinction between "1" and "I" (i) to avoid mis-supplying.
3. A part ordered without specifying its part number can not be supplied.
4. Part indicated by " ★ " mark is not illustrated in the exploded view.

WARNING: Parts indicated by the ⚠ mark have critical characteristics. Use ONLY replacement parts recommended by the manufacturer.

INSTRUCTIONS FOR HANDLING SEMI-CONDUCTORS AND OPTICAL UNIT

Electrostatic breakdown of the semi-conductors or optical pickup may occur due to a potential difference caused by electrostatic charge during unpacking or repair work.

1. Ground for Human Body
   Be sure to wear a grounding band (1 MΩ) that is properly grounded to remove any static electricity that may be charged on the body.
2. Ground for Workbench
   Be sure to place a conductive sheet or copper plate with proper grounding (1 MΩ) on the workbench or other surface, where the semi-conductors are to be placed. Because the static electricity charge on clothing will not escape through the body grounding band, be careful to avoid contacting semi-conductors with your clothing

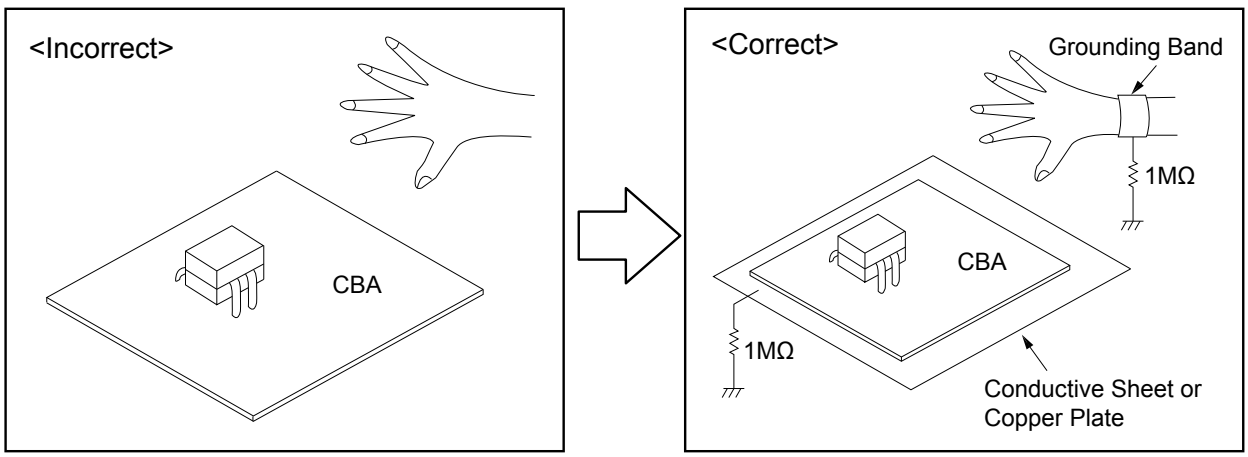

TECHNICAL SPECIFICATIONS

・System	SD/USB Recorder
・Compatible media	SD/USB memory/USB HDD
・Playable formats, file systems	SD, USB: FAT16/FAT32/HFS+
・Playable WAV Format	
Extension	WAV, AIFF, AIF
Resolution	16 bit, 24 bit
Sampling frequency	96, 48, 44.1 kHz
・Playable MP3 Format	
Extension	MP3
Bit rate	32 – 320 kbps and VBR
Sampling frequency	48, 44.1 kHz
・Playable AAC Format	
Extension	M4A
Compression method	AAC-LC
Bit rate	"64 – 320 kbps and VBR 48, 44.1 kHz"
Sampling frequency	2 (stereo), 1 (mono)
・Number of channels	20 Hz – 20 kHz
・Audio frequency characteristics	(+0.5 dB / –1 dB)
・S/N ratio	"More than 89 dB (A-Weighted) "
・Total harmonic distortion	Less than 0.01 %
・Dynamic range	More than 106 dB
・Channel separation	"(for 24 bit WAV playback) Less than –90 dB "
・Variable pitch width	–16 % – +16 %
・Variable trim adjustment width	±2.0 dB

❑ Input

・BALANCED ANALOG IN L/R	
Type	XLR(1:GND, 2:Hot, 3:Cold)
Line setting	
Input level	+4 dBu
Maximum input level	+24 dBu/+20 dBu/+18 dBu
Input impedance	20kΩ/kohms
・UNBALANCED ANALOG IN L/R	
Type	RCA terminal
Input level	–10 dBV
Maximum input level	+10 dBV/+6 dBV/4 dBV
Input impedance	10 kΩ/kohms
・UNBALANCED DIGITAL IN	
Type	RCA terminal
Input impedance	75 Ω/ohms
Standard input level	0.5 Vp-p
Format	IEC-60958(COAXIAL)
・BALANCED DIGITAL IN	
Type	XLR(1:GND, 2:Hot, 3:Cold)
Input impedance	110 Ω/ohms
Standard input level	3.5 Vp-p
Format	IEC-60958(AES/EBU)

❑ Output

	0dBu=0.775 Vrms, 0dBV=1.0 Vrms
・BALANCED ANALOG OUT L/R	
Type	XLR(1:GND, 2:Hot, 3:Cold)
Load impedance	Over 600 Ω/ohms
Output level	+4 dBu at 600 Ω/ohms load
Maximum Output level	+24 dBu/+20 dBu/+18 dBu
・UNBALANCED ANALOG OUT L/R	
Type	RCA terminal
Load impedance	Over 10 kΩ/kohms
Output level	–10 dBV
Maximum Output level	+10 dBV/+6 dBV/+4 dBV
・BALANCED DIGITAL OUT	
Type	XLR(1:GND, 2:Hot, 3:Cold)
Output impedance	110 Ω/ohms
Standard output level	3.0 Vp-p
Format	IEC-60958(AES/EBU)
・UNBALANCED DIGITAL OUT	
Type	RCA terminal
Output impedance	75 Ω/ohms
Standard output level	0.5 Vp-p
Format	IEC-60958(COAXIAL)
・HEADPHONE OUT	20 mW/32 Ω/ohms

❑ Others

・Maximum storage capacity	Up to 2 TB
・Maximum file size	2 GB
・Maximum number of files	2000 files
・Maximum number of folders	(for 1 folder)
・Maximum number of folder hierarchies	1000 folders

❑ General

・Power supply	"AC 120 V, 60 Hz (U.S.A and Canada models) AC 230 V, 50/60 Hz (European, U.K and Asia/ Pacific models)"
・Power consumption	30 W 0.4 W (standby)
・Environmental conditions	
Operating temperature	5 – 35 °C
Operating humidity	25 – 85 %, no condensation
Storage temperature	–20 – 60 °C

DIMENSION

Unit:mm

Weight: 3.6kg

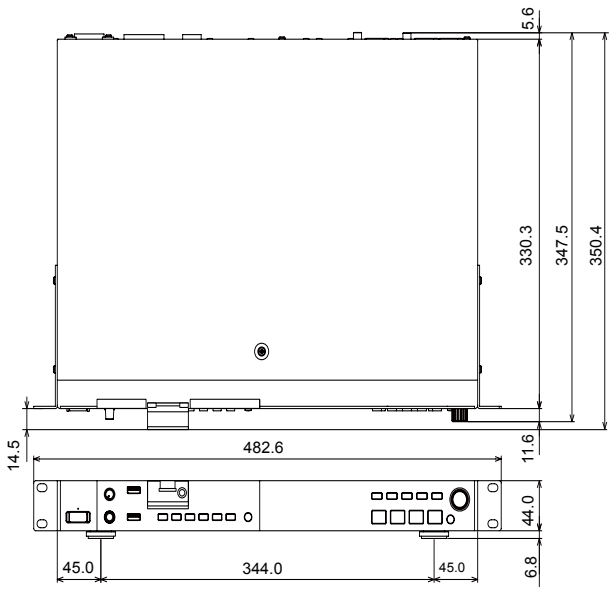

CAUTION IN SERVICING

REMOTE UNIT

When the panel µcom (IC3003) is replaced, update the firmware of panel µcom.
(Refer to "PROCEDURE FOR UPGRADING THE VERSION OF THE FIRMWARE"(21 page))

AUDIO UNIT

① For check, if you remove INPUT Unit from the chassis, connect the M3 Terminal of Audio Unit wire to the Input Unit.
② For check, if you remove the Headphone Unit , connect the M3 Terminal of Audio Unit to the LUG wire of Headphone Unit.
③ For check, if you remove the Audio Unit from the chassis, connect the M3 Terminal of Audio Unit to the GND of SMPS secondary side.

INPUT UNIT

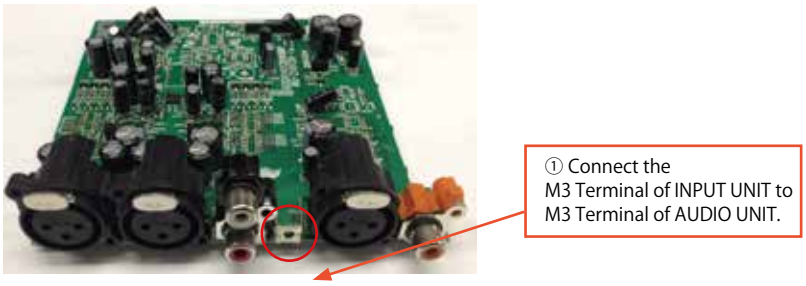

HeadPhone UNIT

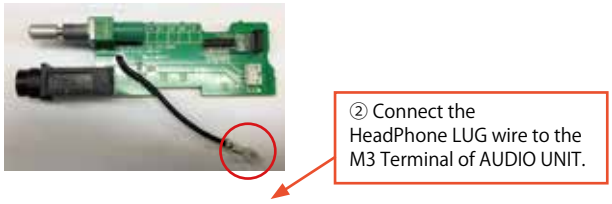

AUDIO UNIT

SMPS UNIT

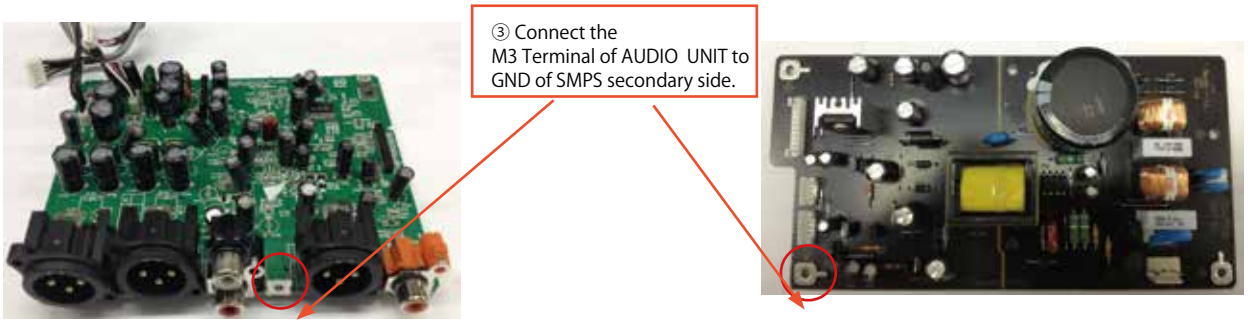

DISASSEMBLY

- Disassemble in order of the arrow in the following figure.
- In the case of the re-assembling, assemble it in order of the reverse of the following flow.
- In the case of the reassembling, observe "Caution concerning disassembly and assembly!".
- If wire bundles are untied or moved to perform adjustment or replace parts etc., be sure to rearrange them neatly as they were originally bundled or placed afterward.
  Otherwise, incorrect arrangement can be a cause of noise generation.

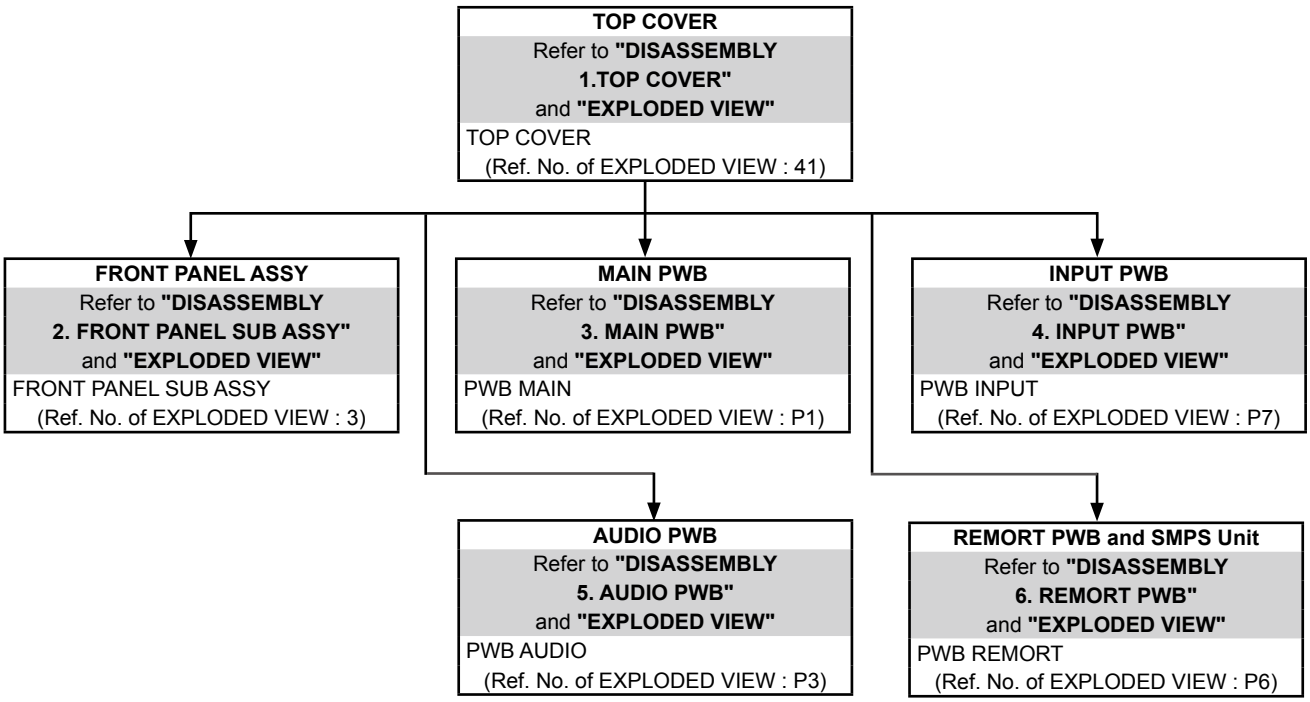

About the photos used for "descriptions of the DISASSEMBLY" section

- The shooting direction of each photograph used herein is indicated on the left side of the respective photograph as "Shooting direction: ***". (*** : A,B,C,D)
- Refer to the diagram below about the shooting direction of each photograph.
- Photographs with no shooting direction indicated were taken from the top of the set.

The viewpoint of each photograph
(Shooting direction)



1. TOP COVER

Proceeding : TOP COVER

(1) Remove the BRACKET RACK.

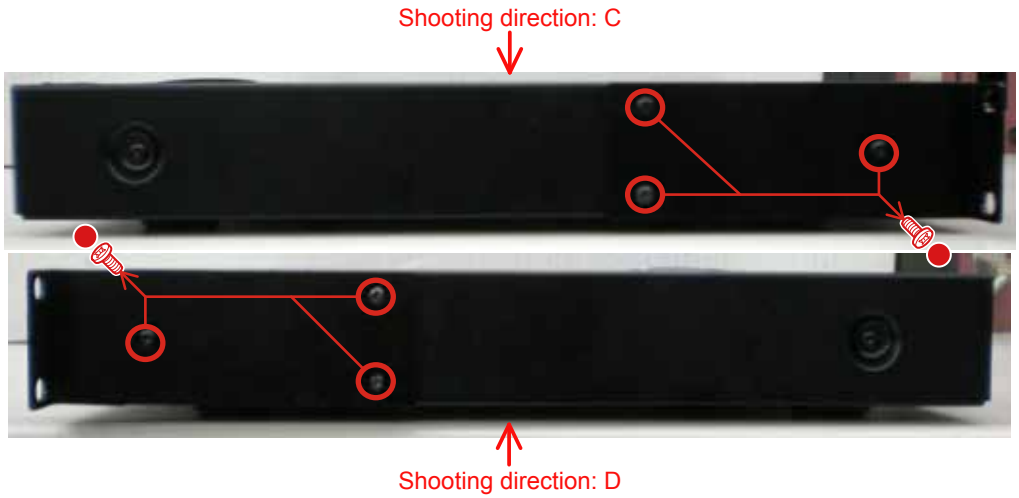

(2) Remove the TOP COVER and screws.

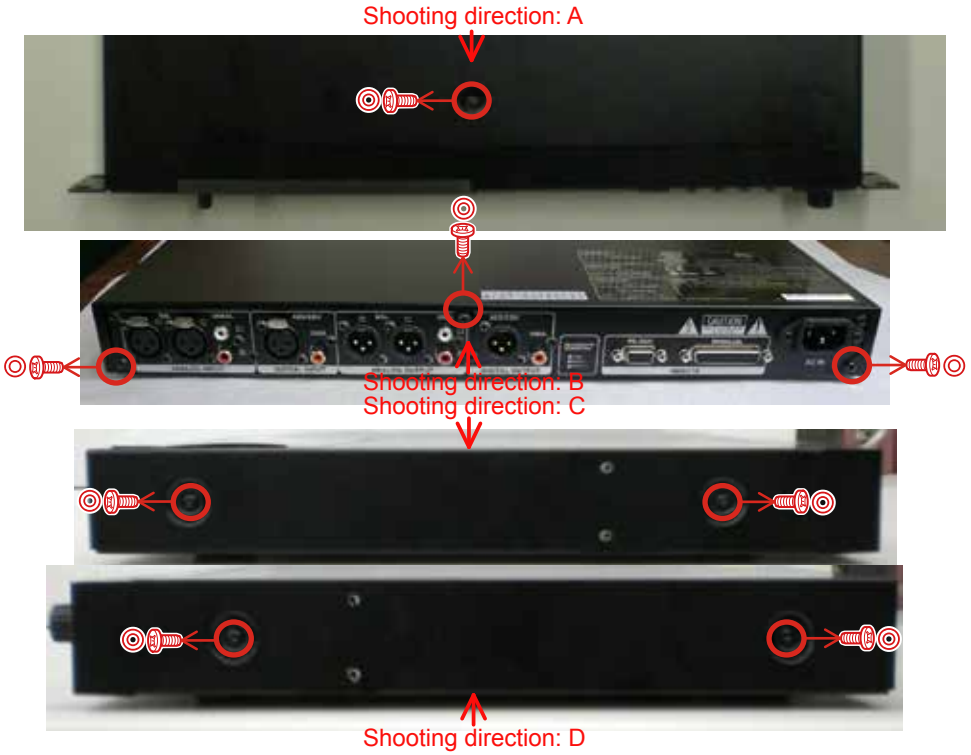

2. FRONT PANEL SUB ASSY

Proceeding : TOP COVER → FRONT PANEL SUB ASSY

(1) Remove the FRONT PANEL SUB ASSY.

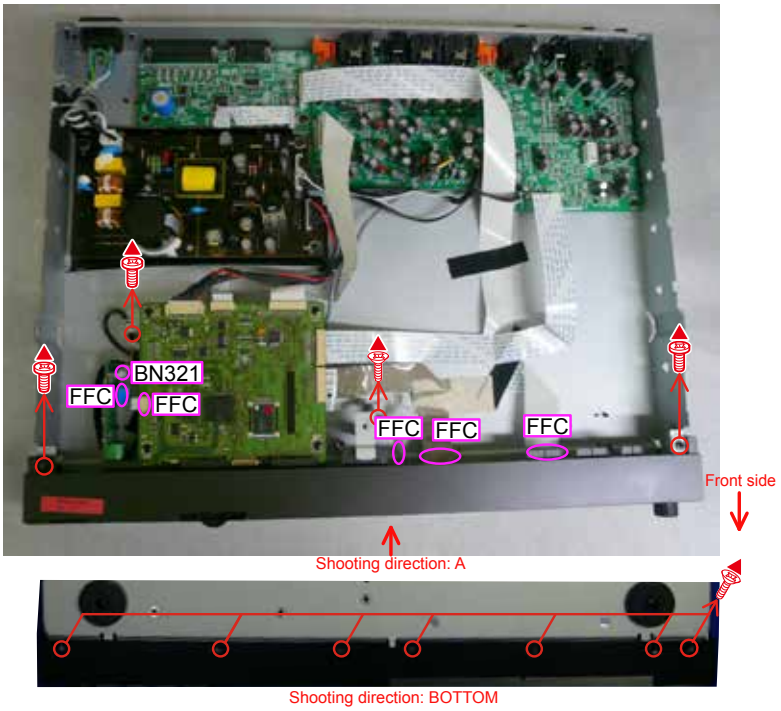

(2) Remove the screws. Disconnect the FFC.

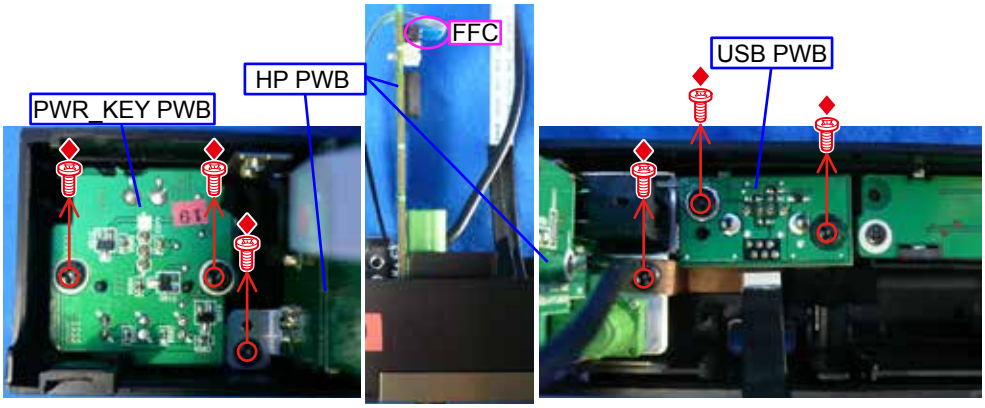

(3) Remove the screws.

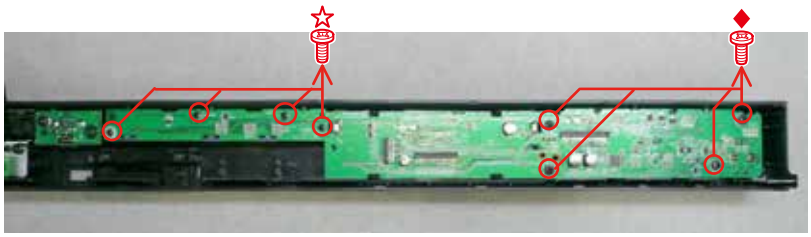

3. MAIN PWB

Proceeding : TOP COVER → **MAIN PWB**

(1) Disconnect the connector wires and FFC. Remove the screws.

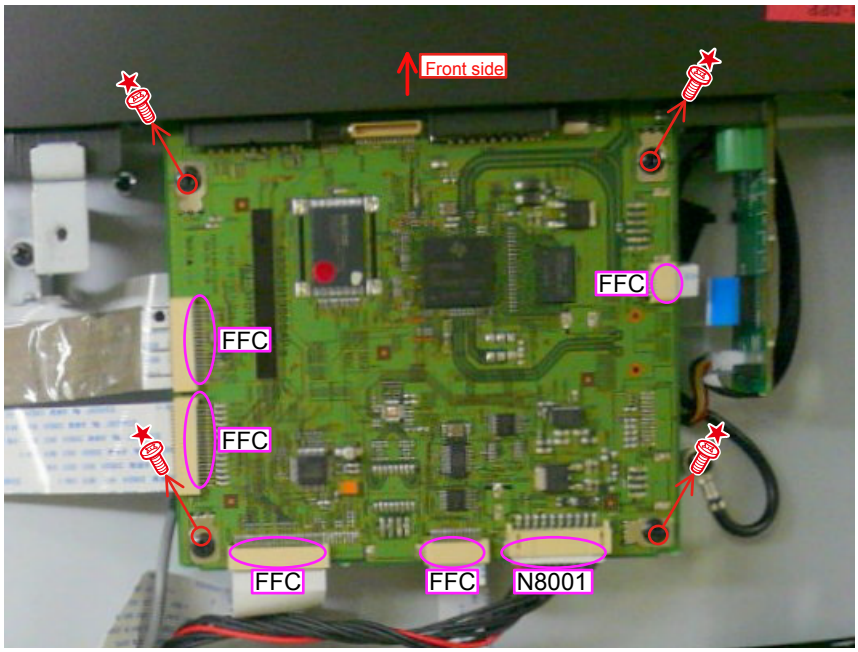

4. INPUT PWB

Proceeding : TOP COVER → **INPUT PWB**

(1) Disconnect the connector wires and FFC. Remove the screws.

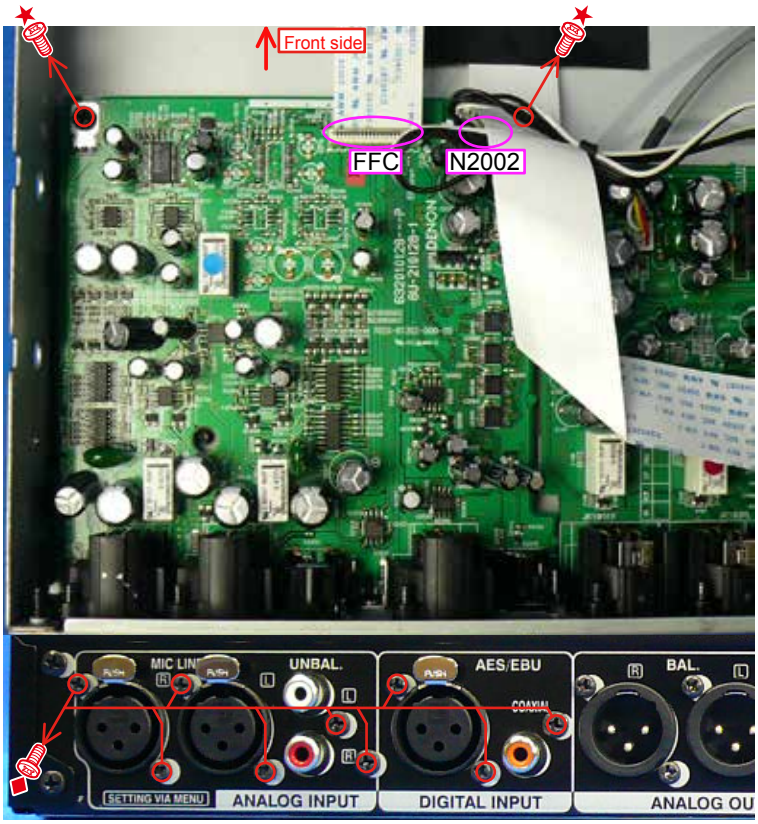

5. AUDIO PWB

Proceeding : TOP COVER → AUDIO PWB

(1) Disconnect the connector wires and FFC. Remove the screws.

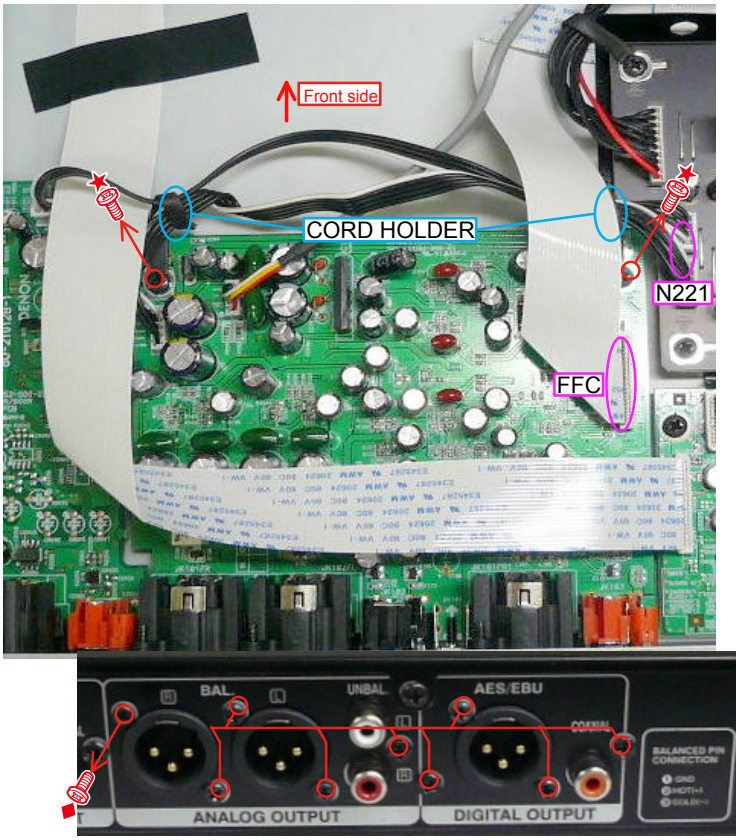

6. REMOTE PWB and SMPS PWB

Proceeding : TOP COVER → REMOTE PWB → SMPS PWB

(1) Disconnect the connector wires and FFC. Remove the screws.

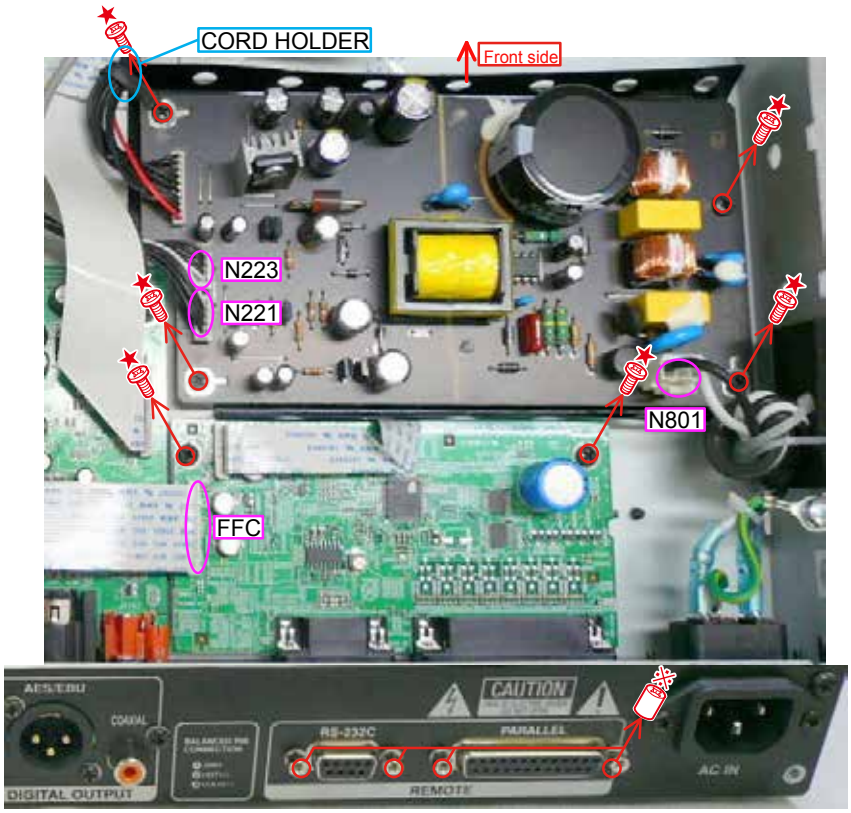

SPECIAL MODE

Special mode setting button

Press the **"ON/STANDBY"** button to turn on the power while pressing both the buttons **"STOP(■)"** and the button **"PLAY(►)"** at the same time.

Exit Special mode

Press continue **"ON/STANDBY"** button, and the power is turned off.

Function of Special mode and the operation

MODE				Jog Dial/Push Enter		Button	Contents
				Choise	Enter	Back One	
001	Function Check			Turn	Push	Back	
	001	Initialize		↑	↑	↑	Initialization mode
		001	All	↑	↑	↑	Initialize all parameters to factory setting
		002	Preset	↑	↑	↑	Initialize Preset to factory setting
		003	Player running time	↑	↑	↑	Initialize Player running time to factory setting
	002	Audio Check		↑	↑	↑	Analog line check mode
		001	Infinity Zero	↑	↑	↑	Silence Playback
		002	1kHz/-2dBFS->+24dBu	↑	↑	↑	L/Rch Sine wave playback
		003	20Hz/-2dBFS->+24dBu	↑	↑	↑	L/Rch Sine wave playback
		004	20kHz/-2dBFS->+24dBu	↑	↑	↑	L/Rch Sine wave playback
		005	1kHz/-2dBFS->+24dBu Lch Only	↑	↑	↑	Lch Sine wave play back
		006	1kHz/-2dBFS->+24dBu Rch Only	↑	↑	↑	Rch Sine wave play back
	003	Audio Check HeadPhone		↑	↑	↑	HeadPhone Check mode
		001	1kHz	↑	↑	↑	L/Rch Sine wave playback
		002	20Hz	↑	↑	↑	L/Rch Sine wave playback
		003	20kHz	↑	↑	↑	L/Rch Sine wave playback
		004	1khz Lch Only	↑	↑	↑	Lch Sine wave play back
		005	1khz Rch Only	↑	↑	↑	Rch Sine wave play back
	004	Audio Thru		↑	↑	↑	OverAll Check mode
		001	MIC(Bal.)	↑	↑	↑	Mic OverAll
		002	LINE(Bal.)	↑	↑	↑	XLR OverAll
		003	RCA(Unbal.)	↑	↑	↑	RCA OverAll
		004	Digital(Bal)	↑	↑	↑	AES/EBU OverAll
		005	Digital(UnB)	↑	↑	↑	Coaxial OverAll
	005	FS Select		↑	↑	↑	Sampling frequency setting mode
		001	44.1kHz	↑	↑	↑	Sampling Rate : 44.1kHz
		002	48kHz	↑	↑	↑	Sampling Rate : 48kHz
		003	96kHz	↑	↑	↑	Sampling Rate : 96kHz
	006	USB Drive MS Test		↑	↑	↑	USB Drive R/W Test
	007	USB Keyboard Test		↑	↑	↑	USB Keyboard Test Mode
		001	uhidApiInit()	↑	↑	↑	USB Keyboard Test Mode
		002	uhidApiStart()	↑	↑	↑	USB Keyboard Test Mode
		003	uhidApiStop()	↑	↑	↑	USB Keyboard Test Mode
		004	TEST	↑	↑	↑	USB Keyboard Test Mode
	008	USB Drive Host Test Mode		↑	↑	↑	USB Drive Host Test
	009	USB Keyboard Host Test Mode		↑	↑	↑	USB Keyboard HOST Test
002	SD Slot Check			↑	↑	↑	SD Slot check
	001	SD Slot Test SD		↑	↑	↑	SD Slot check
	002	Heat Run (SD1)		↑	↑	↑	HeatRun Mode
003	Panel Check			↑	↑	↑	
	001	LED Test		↑	↑	↑	PANEL LED Test Mode
		001	All On	↑	-	↑	All Lit
		002	75% DIMMER	↑	-	↑	75% DIMMER
		003	50% DIMMER	↑	-	↑	50% DIMMER
		004	25% DIMMER	↑	-	↑	25% DIMMER
		005	POWER LED GREEN	↑	-	↑	Lit Power LED GREEN
		006	POWER LED RED	↑	-	↑	Lit Power LED RED
		007	All OFF	↑	-	↑	All Off
	002	SW Test		↑	↑	↑	PANEL SW Test Mode
	003	Knob Test		↑	↑	↑	JOG Encorder Test Mode
	004	Volume Read		↑	↑	↑	HeadPhone Volume Test Mode

MODE			Jog Dial/Push Enter		Button	Contents
			Choise	Enter	Back One	
004	Remote Check		↑	↑	↑	
	001	HOT START	↑	↑	↑	Parallel remote check
	002	Other state	↑	↑	↑	Parallel remote check
	003	Tally Test	↑	↑	↑	Parallel remote check
	004	Serial Test	↑	↑	↑	Loop back test
005	System Information		↑	↑	↑	
	001	Version	↑	↑	↑	Software Virsion Display
	002	Total Time	↑	↑	↑	Running time Display

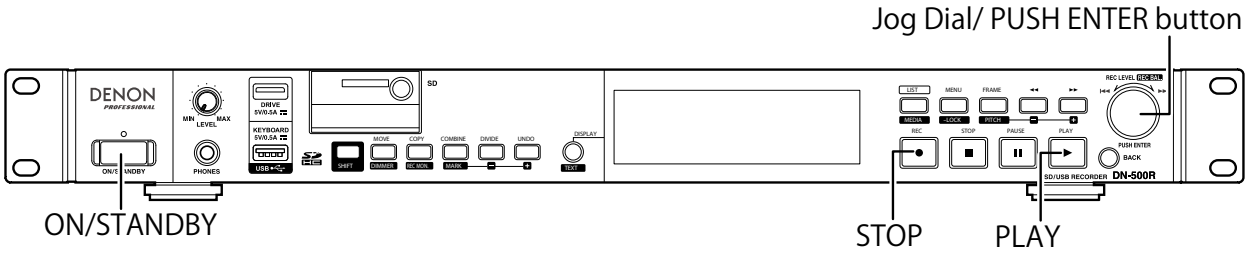

Special mode
●Service mode
Start the Service mode
While pressing and holding the **[PLAY]** and **[STOP]** buttons at the same time, turn the power on and still hold the buttons to start the service mode.

Display

---Service Mode---	
001 Function Check	:Cursor position
002 SD Slot Check	
003 Panel Check	
004 Remote Check	

•You can turn the **[Jog Dial]** to move the cursor as follows and select a function.
”Function CHK"→"SD Slot CHK”→”Panel CHK”→”Remote CHK”→”System Information” →”Remote Head Amp Utility"
•Press the **[Jog Dial]** to enter the displayed mode. Submodes are displayed if the selected mode has any.

1 Function Check

Display

---Function Check---	
001 Initialize	:Cursor position
002 Audio Check	
003 Audio Check Headphone	
004 Audio Thru	

•You can turn the **[Jog Dial]** to move the cursor as follows and select a function.
Initialize → Audio Check → Audio Check Headphone →
Audio Thru →FS Select→USB Drive MS Test→USB Keyboard Test
→USB Drive Host Test Mode→USB Keybard Test Mode
•Press the **[Jog Dial]** to enter the displayed mode. Submodes are displayed if the selected mode has any.
•Press the **[BACK]** button to enter the TOP level mode.

1-1 Initialize

•You can turn the **[Jog Dial]** to move the cursor as follows and select a function.
All→Preset→Player running time
•Press the **[Jog Dial]** to enter the displayed mode.
"Execute" and "Cancel" are displayed.
Use the **[Jog Dial]** to select **[Execute]** and press the **[Jog Dial]** to execute the initialization.
"Complete!" is displayed: Initialization is completed
"Fail" is displayed:Initialization not completed (timeout).
Select "Cancel" and press the **[Jog Dial]** to return to the TOP level.
While the initialization is executed, no button operation is accepted.

1-2 Audio Check (Not for service)

•You can turn the **[Jog Dial]** to move the cursor as follows and select a function.
Infinity zero → 1kHz/-2dBFS->+24dBu → 20Hz/-2dBFS->+24dBu → 20KHz/-2dBFS->+24dBu →
1kHz/-2dBFS->+24dBu Lch Only → 1kHz/-2dBFS->+24dBu Rch only
•Press the **[Jog Dial]** at the cursor position to output test signals from ADSP.

Infinity zero	Out put signal is "Silence zero" form L/R ch
1kHz/-2dBFS->+24dBu	Out put signal is "1kHz " from L/R ch
20Hz/-2dBFS->+24dBu	Out put signal is "20Hz " from L/R ch
20KHz/-2dBFS->+24dBu	Out put signal is "20KHz " from L/R ch
1kHz/-2dBFS->+24dBu Lch only	Out put signal is "1kHz " from Lch
1kHz/-2dBFS->+24dBu Rch only	Out put signal is "1kHz " from Rch

•Press the **[BACK]** button to enter the TOP level mode.

1-3Audio Check Headphone (Not for service)

•You can turn the **[Jog Dial]** to move the cursor as follows and select a function.
1kHz→20Hz→20kHz→1kHz Lch Only →1kHz Rch Only
•Press the **[Jog Dial]** at the cursor position to output test signals from ADSP.

1KHz	Out put signal is "1kHz" from Headphone L/R ch
20Hz	Out put signal is "20Hz" from Headphone L/R ch
20KHz	Out put signal is "20KHz" from Headphone L/R ch
1kHz Lch only	Out put signal is "1kHz" from Headphone Lch
1kHz Rch only	Out put signal is "1kHz" from Headphone Rch

•Press the **[BACK]** button to enter the TOP level mode.

1-4 Audio Thru (Not for service)

•You can turn the **[Jog Dial]** to move the cursor as follows and select a function.

MIC(Bal.) → Line(Bal.) → RCA(Unbal.) → Digital (Bal) → Digital (UnB)

•Press the **[Jog Dial]** at the cursor position to check below.

MIC(Bal.)	Bal input with MIC level input → Monitor sound from the balanced output.
Line(Bal.)	Bal input with Line level input → Monitor sound from the balanced output
RCA(Unbal.)	Unbal input with Line level input → Monitor sound from the unbalanced output
Digital(Bal)	Bal input with AES/EBU level input → Monitor sound from the balanced output
Digital (UnB)	Bal input with Coaxial level input → Monitor sound from the unbalanced output

1-5 Fs Select (Not for service)

•Switch the sampling frequency of this unit.

•You can turn the **[Jog Dial]** to move the cursor as follows and select a function.

44.1KHz→48KHz→96KHz

•Press the **[Jog Dial]** to switch to the selected FS.

•Press the **[BACK]** button to move up one level of the mode .

1-6 USB Drive MS Test (Not for service)

•Perform the data read/write test on the device connected to the USB drive.

•Press the **[Jog Dial]** to start the test. “Writing & Reading..” is displayed.

•When the test is completed successfully, “Complete!” is displayed.

•When the test fails to read or write data, “Fail” is displayed.

•Press the **[BACK]** button to enter the TOP level mode.

1-7 USB Keyboard Test (Not for service)

•Perform the Keyboard test connected to the USB connector.

•When you turn the **[Jog Dial]**, you can move the cursor, as follows: to select the features.

uhidAPiInit( ) → uhidApiStart( ) → uhidApiStop( ) → TEST

1-8 USB Drive Host Test Mode (Not for service)

•Compliance test function USB2.0 compliance test function USB 2.0.

1-9 USB Keyboard Host Test Mode (Not for service)

•Generate a random signal for testing.

2 SD Slot Check

Display

---SD Slot Check---
001 SD Slot Test
002 Heat Run (SD)

:Cursor position

•You can turn the **[Jog Dial]** to move the cursor as follows and select a function.

SD Slot Test → Heat Run (SD)

•Press the **[Jog Dial]** to enter the displayed mode. Submodes are displayed if the selected mode has any.

•Press the **[BACK]** button to move up one level of the mode .

2-1 SD Slot Test

•Perform the data read/write test on the device connected to the SD connector.

•Press the **[Jog Dial]** to start the test. “Writing & Reading..” is displayed.

•When the test is completed successfully, “Complete!” is displayed.

•When the test fails to read or write data, “Fail” is displayed.

•Press the **[BACK]** button to enter the TOP level mode.

2-3 Heat Run (SD)

• Use the terminal of SD Slot, do the heat run.

•Continuously play the file on the SD card.

• Press the **[Jog Dial]** to start the test. Start the Heat Run at normal screen.

•Displaying the number of playback file.

3 Panel Check mode

Display

---Panel Check---	
001	LED Test
002	SW Test
003	Knob Test
004	Volume Read

:Cursor position

•You can turn the **[Jog Dial]** to move the cursor as follows and select a function.
LED Test→SW Test→Knob Test→Volume read
•Press the **[Jog Dial]** to enter the displayed mode. Submodes are displayed if the selected mode has any.
•Press the **[BACK]** button to enter the TOP level mode.

3-1 LED Test

•You can turn the **[Jog Dial]** to move the cursor as follows and select a function.

ALL ON	All LED on.
75% DIMMER	Lights DIMMER 75% (non-PowerLED) LED panel for all.
50% DIMMER	Lights DIMMER 50% (non-PowerLED) LED panel for all.
25% DIMMER	Lights DIMMER 25% (non-PowerLED) LED panel for all.
POWER LED GREEN	Green lights PowerLED. Other Off.
POWER LED RED	Red lights PowerLED. Other Off.
ALL OFF	All LED off.

•Press the **[BACK]** button to move up one level of the mode .

3-2 SW TEST

•Check the operation of the front panel buttons.
•The input key name and “Make/Break” are displayed.
•Power LED is lit on Green and Red alternately each time the [DISPLAY] button is pressed.
•Press the **[BACK]** button to move up one level of the mode .

3-3 KNOB TEST

•Check the operation of the **[JOG Dial]**.
•JOG LED is lit on and off alternately each time the [JOG Dial] is pressed.
•Displayed range of count is from "[00][00]" to "[00][63]".
•Press the **[BACK]** button to move up one level of the mode .

3-4 Volume read

•The value of [Volume Knob] is displayed.
•Displayed range of count is from "[00][00]" to "[03][FF]".
•Press the **[BACK]** button to move up one level of the mode .

4 Remote Check

For the remote control unit used as a jig, see the circuit diagram shown in [Parallel control] of the owner’s manual.

Display

---Remote Mode---	
001	HOT START
002	Other Test
003	Tally Test
004	Serial Test

:Cursor position

•You can turn the **[Jog Dial]** to move the cursor as follows and select a function.
Hot start→Other state→Tally test→Seriall Test
•Press the **[Jog Dial]** to enter the displayed mode. Submodes are displayed if the selected mode has any.
•Press the **[BACK]** button to enter the TOP level mode.

4-1 Hot start sense mode

•Check the operation of all the input button of remote parallel input port.
•Display the button name you pressed.
•Press the **[BACK]** button to move up one level of the mode .

4-2 Other state sense mode (not for service)

•The button operation check except the HotStart input button of the parallel remote input port.
•Press the **[BACK]** button to move up one level of the mode .

4-3 Tally Test mode

•**[PLAY]**, **[PAUSE]**, **[STOP]** and **[REC]** button's LED is lit on and off alternately each time button is pressed.
•Press the **[BACK]** button to move up one level of the mode .

4-4 Serial Test mode (Need serial loopback jig.)

•Serial Test is displayed. The test code is output to the serial output.
When the same code is returned to the serial input through loopback, “Complete!” is displayed in the third line on the display.

When the code is garbled or timeout occurs, “Fail ! ” is displayed.
•Press the **[BACK]** button to move up one level of the mode .

5 System Information

Display

---Service Information---
001 Version
002 Total Time

:Cursor position

•You can turn the **[Jog Dial]** to move the cursor as follows and select a function.
Version→Total Time
•Press the **[Jog Dial]** to enter the displayed mode. Submodes are displayed if the selected mode has any.
•Press the **[BACK]** button to enter the TOP level mode.

5-1 FW Version mode

•System(ARM/ADSP/Panel) version is displayed.
•Press the **[BACK]** button to move up one level of the mode .

5-2 Total Time mode

•Confirm the total operating time of the set.
•Press the **[BACK]** button to move up one level of the mode .

PASSWORD CLEARED METHOD

When Setting password is forgotten, progress as follows.

(1) Turn the button "21 Admin Passwd" System Setting menu(MENU button→07 System Setting).
The following appears on the OLED display section.

Display

Input Password
</>:<</>> BKSP:FRAME IN:JOG

(2) Continuously push the ◄◄ and ►► buttons. The following appears on the OLED display.

Display

Password Cleared

ERROR TABLE

Classification	Message	Error content	How to respond
Error display	No Media	There is no media.	Insert media.
	Unformat	Unsupported file system.	Formatted with this unit.
	Media Full	There is no free space on the media.	Replace the media.
	Track Full	Track the number of full state	Number of tracks confirmation.
	Media Write Inhibited	Media is write-protected.	Check the media.
	Media Format:HFS	For HFS format, media can not be recorded.	Format or exchange of media
	File Not Found	File can not be found.	Checking file.
	Track Not Found	Track can not be found.	Checking file.
	No Track	There is no track.	Check the media.
	Err Media XX XX:Table:Refer to <Table: Factor No. for ERR_MEDIA>.	Error occurred in the media access.	Replace the media.
	Unsupported File	Files that are not supported.	Checking file.
	VBR	Prohibited operation in VBR.	Checking the file system.
	Not allowed	Operation not allowed.	Confirm the operation.
	Not Available	Operation not allowed.	Confirm the operation.
	No Mark	There is no mark.	Checking the track mark.
	Mark Full	Number of marks full state.	Number of marks confirmation.
	Fail	"Do not hit the mark. (If you hit the mark in places that are already beaten or if you doze off the mark to MP3 unmarked area or AAC)"	Checking file.
	ALC	ALC you Rec Level change in ALC = On can not change the Rec Level When ON.	Check the setting.
	Input Volume Fixed	For the Input Volume = Fixed, you can not change the Rec Level.	Check the setting.
	Can't Record to NET	For NET, the current media can not be recorded.	Change the current media.
	No Signal	Digital input signal is not input.	Checking the connection.
	Signal Unsupport	It is receiving a digital input signal that is not supported.(44.1/48/98KHz than, 96KHz time, when receiving and DTS etc to MP3 recording)	Confirmation of the input signal.
	Already Exists	There is already a file with the same name.	Checking file.
	Registered	Can not edit the file. Bcause it is registration program of hot-start or the list of timer playback.	Confirm the operation.
	Some files are skipped	File several operations were skipped due to the same name.	Checking file.
	Long Title	File name length exceeds the maximum.	Check the name of the folder you are trying to record or confirmation of file.
	Invalid Hot No.	Hot invalid number is specified.	Confirmation of the number.
	Date/Time Error	RTC data is abnormal.	To reset the RTC.
	No Program Track	No files are program.	Check the media.
	Password Error	Password error.	Password confirmation.
	Password Mismatch	The password is not correct.	Password confirmation.
	ErrUpdateFile	Update File is incorrect.	Check for updates file.
Error of dual recording.	No Backup Media	There is no backup media.	Insert media.
	MediaWriteInhibited	The backup medium is write-protected.	Check the media.
	Backup Media Full	There is no free space on the backup media.	Replace of media.
	Backup Media:HFS	For HFS format, backup media performs normal recording Dual Rec to cancel.	Replace of media.
Error of relay recording	No Secondary Media	There is no secondary media.	Insert media.
	MediaWriteInhibited	Secondary media is write-protected.	Check the media.
	SecondaryMedia Full	There is no free space on the secondary media.	Replace of media.
	Relay Media:HFS	There is no free space for, the HFS format is secondary media.	Replace of media.
Error of HW	Err Flash ROM	An error occurred in Flash ROM.	Replacing the Flash ROM.
Warning	SDx Door Open x:1 / 2 / 1&2	The SD door is open.	Close the door SD.
	Key Restricted	Front key operation is limited.	To release the front key lock.
	Key Locked	Front key operation is locked.	To release the front key lock.
	All Key Locked	Key operation is locked.	To release the front key lock.
	Hot Start Playing…	Can not be operated because of the hot start in.	Stop hot start.

Classification	Message	Error content	How to respond
	Select Files First	Not file selection.	Select File.
	Press Stop	Can not be operated because it is not being stopped.	Check Status.

Table: Factor No. for ERR_MEDIA

Category	Category No.	Description
COMMON	01	Open error
	02	Close error
READ	11	Read error
	12	Time-out
	13	Buffer underrun error
WRITE	21	Write error

Table: Factor No. for ERR_NET

Category	Category No.	Description
COMMON	01	Open error
	02	Close error
	03	Connection time-out
READ	11	Read error
	12	Time-out
WRITE	21	Write error
	23	Buffer over error

WHEN THE MICROPROCESSOR IS REPLACED WITH A NEW ONE

When the U-PRO (Microprocessor) or the Flash ROM is replaced, confirm the following.

PWB Name	Ref. No.	Description	After replaced	Remark
MAIN	U8203	IC MX29LV320EBTI-70G	**B**	Replace the MAIN PCB UNIT ASSY.
REMOTE	IC3003	IC R5F101JCAFA	**B**	

After replacing

A : Mask ROM (With software). No need for write-in of software to the microprocessor.

B : Flash ROM (With software). Usually, no need for write-in of software. But, when the software was updated, you should write the new software on the microprocessor or flash ROM. Check the software version.

C : Empty Flash ROM (Without software). You should write the software on the microprocessor or flash ROM. Refer to "Update procedure" or "writing procedure", when you write the software.

PROCEDURE FOR UPGRADING THE VERSION OF THE FIRMWARE

Use the procedure described below to update the firmware to a newer version and replace the U8203, IC3003.

- Store the file for updating the firmware in the root directory of USB device.
- Connect the USB device to the USB A terminal.

NOTE: Do not turn off the power or disconnect the USB cable or the USB device while the firmware is being updated.

1. Procedure for upgrading firmware

(1) Turn on the power .

The following appears on the OLED dot display section.

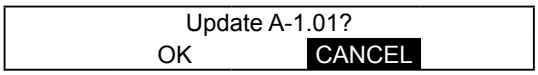

(2) Turn the Encoder vol to select "OK".

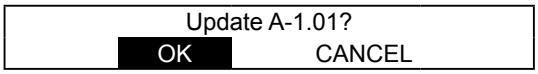

(3) Press the Encoder Vol.to begin updating.

The following appears on the OLED display.

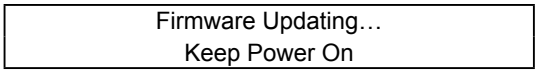

(4)When firmware updating is completed, if the Panel CPU version is different, the Panel CPU version upgrading automatically starts.

(5) If update is completed, it reboots automatically.

NOTE :

If the power is cut off during the update, this unit starts to update the firmware again at the next startup (in emergency mode). Therefore, do not disconnect the USB device even if the power is cut off. When the update is completed, this unit automatically restarts to operate in the normal mode.

TROUBLE SHOOTING

FLOW CHART NO.1 (SMPS Unit)

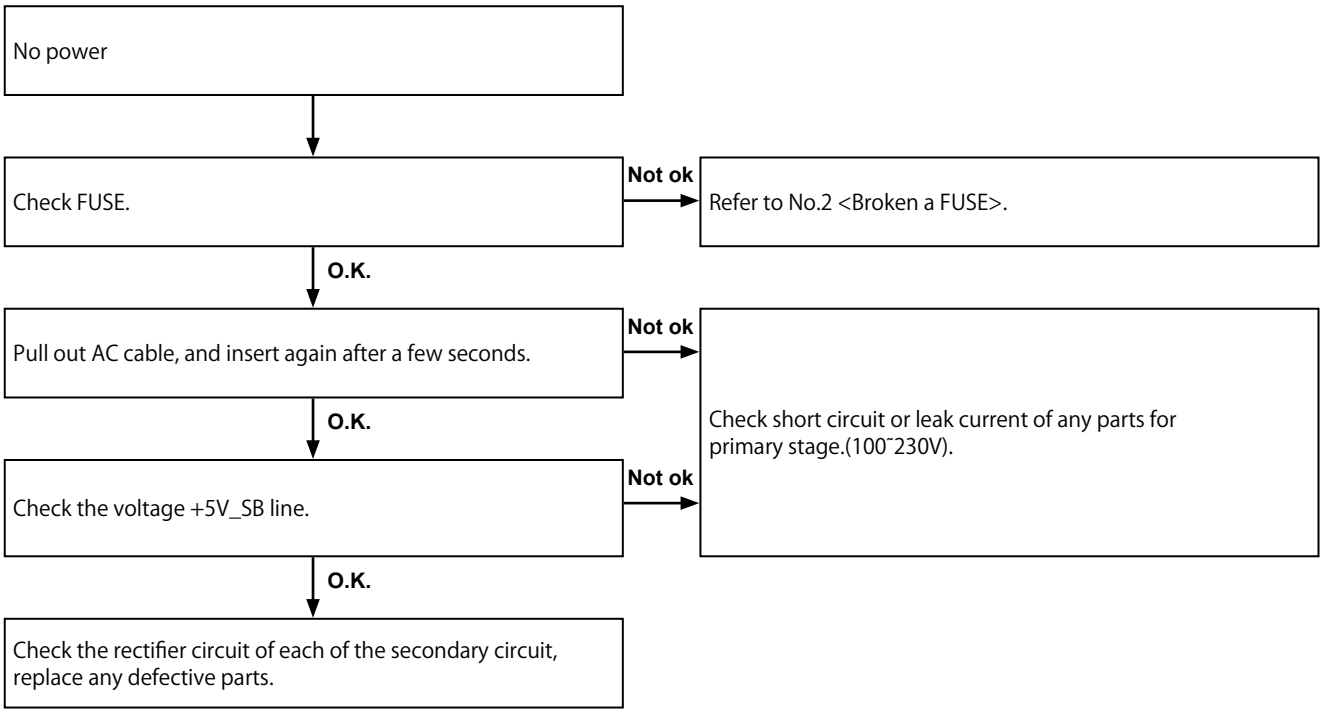

FLOW CHART NO.2 (SMPS UNIT)

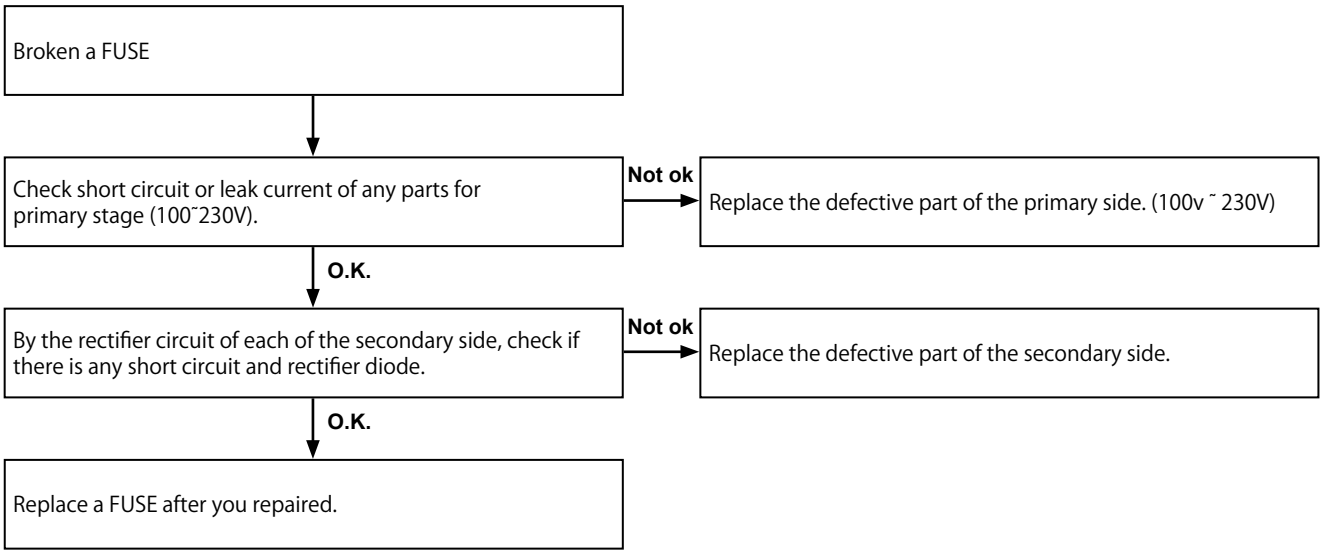

FLOW CHART NO.3 (SMPS UNIT)

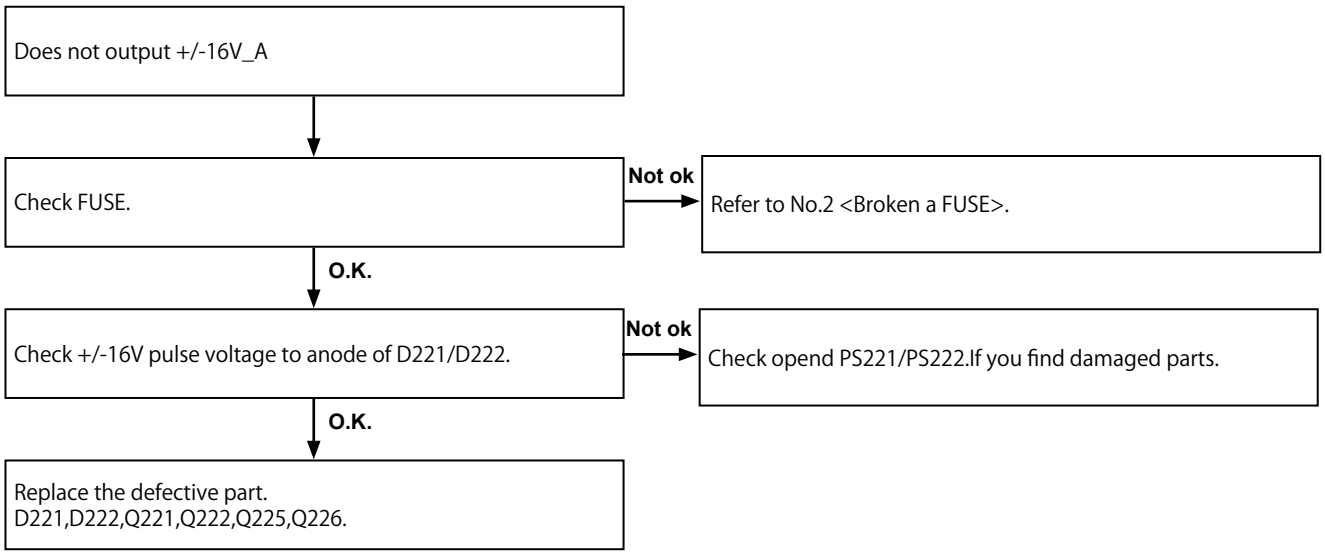

FLOW CHART NO.4 (SMPS UNIT)

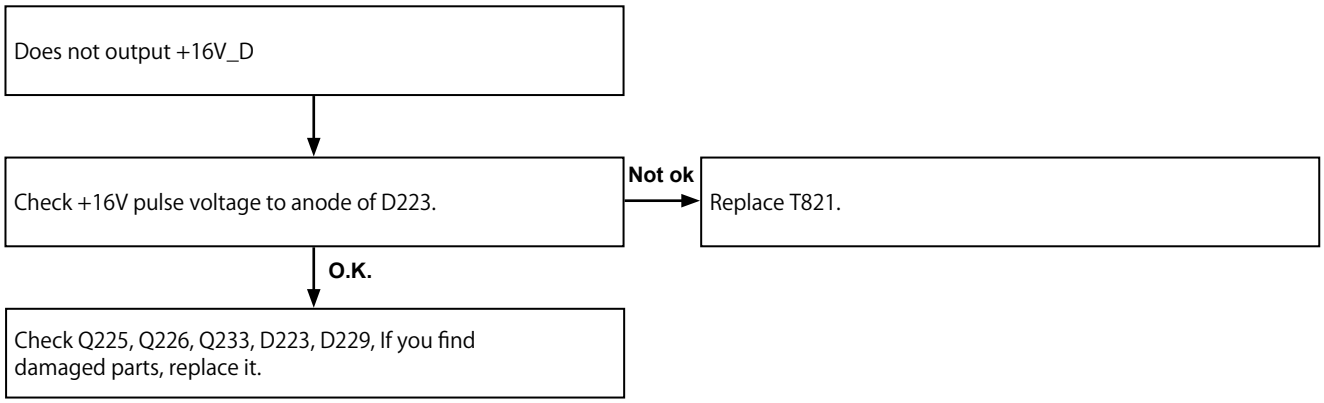

FLOW CHART NO.5 (SMPS UNIT)

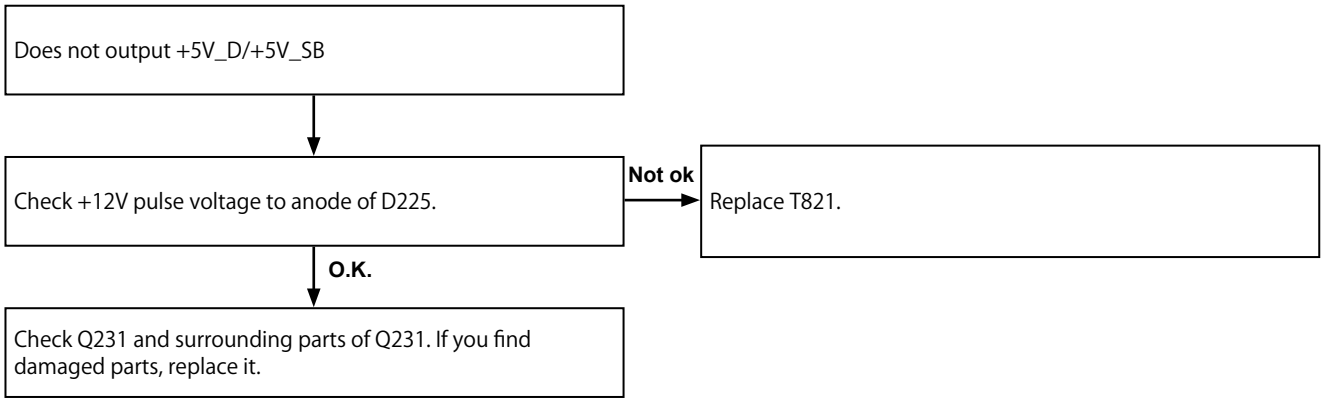

FLOW CHART NO.6 (PANEL UNIT , REMOTE UNIT)

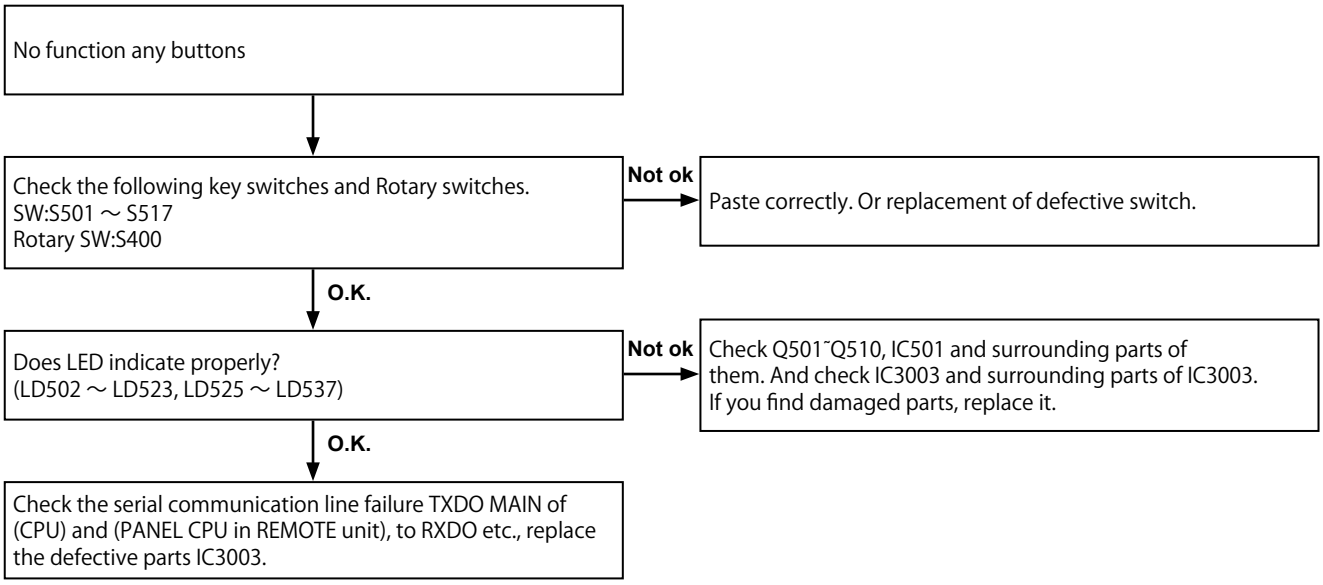

FLOW CHART NO.7 (PANEL UNIT, REMOTE UNIT)

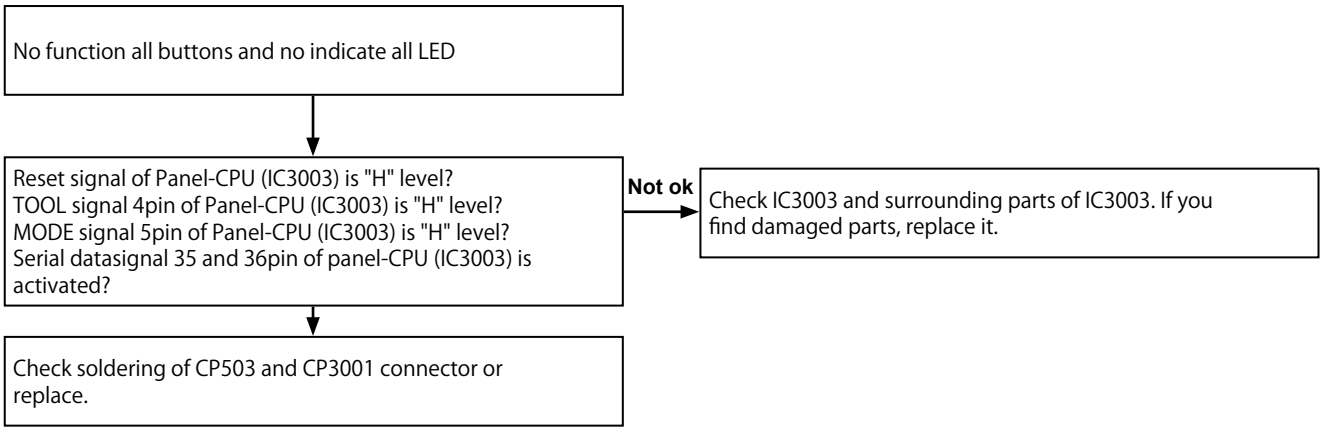

FLOW CHART NO.8 (PANEL UNIT)

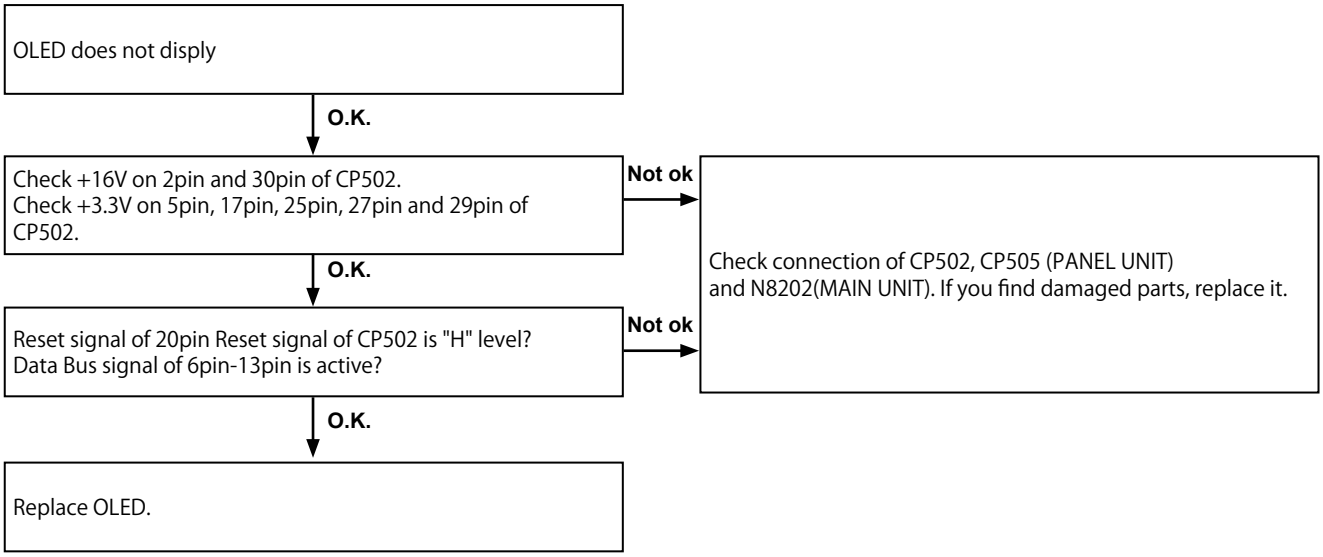

FLOW CHART NO.9 (REMOTE UNIT)

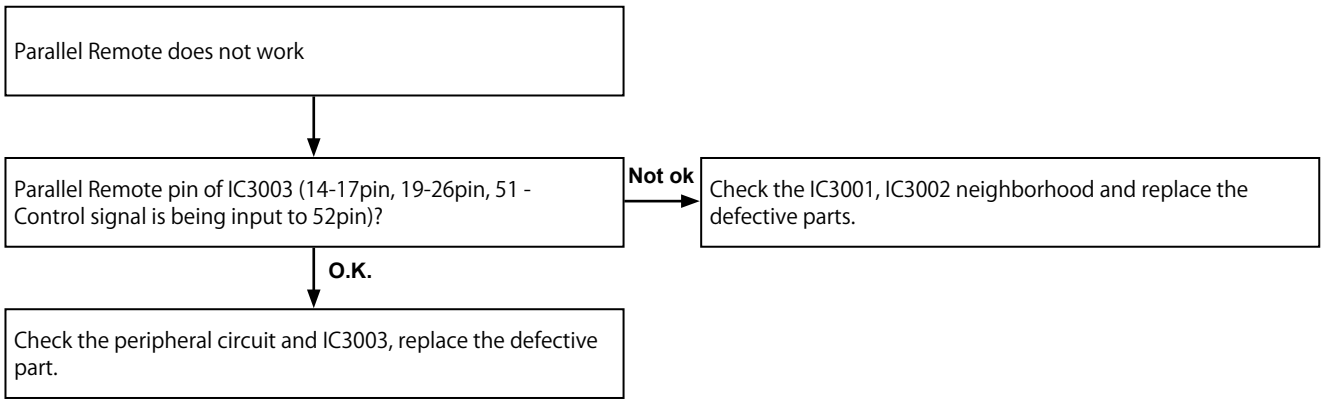

FLOW CHART No.10 (REMOTE UNIT)

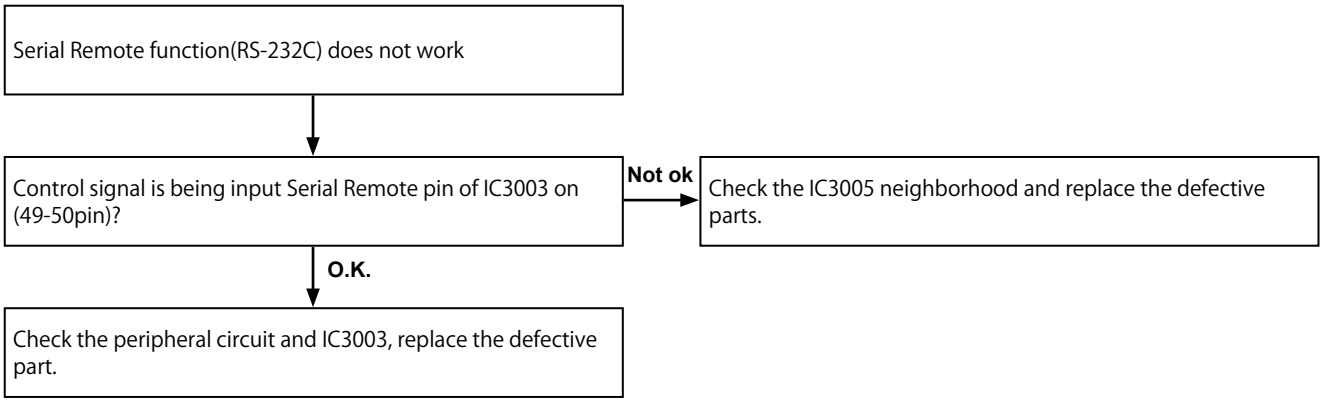

FLOW CHART No.11 (MAIN UNIT)

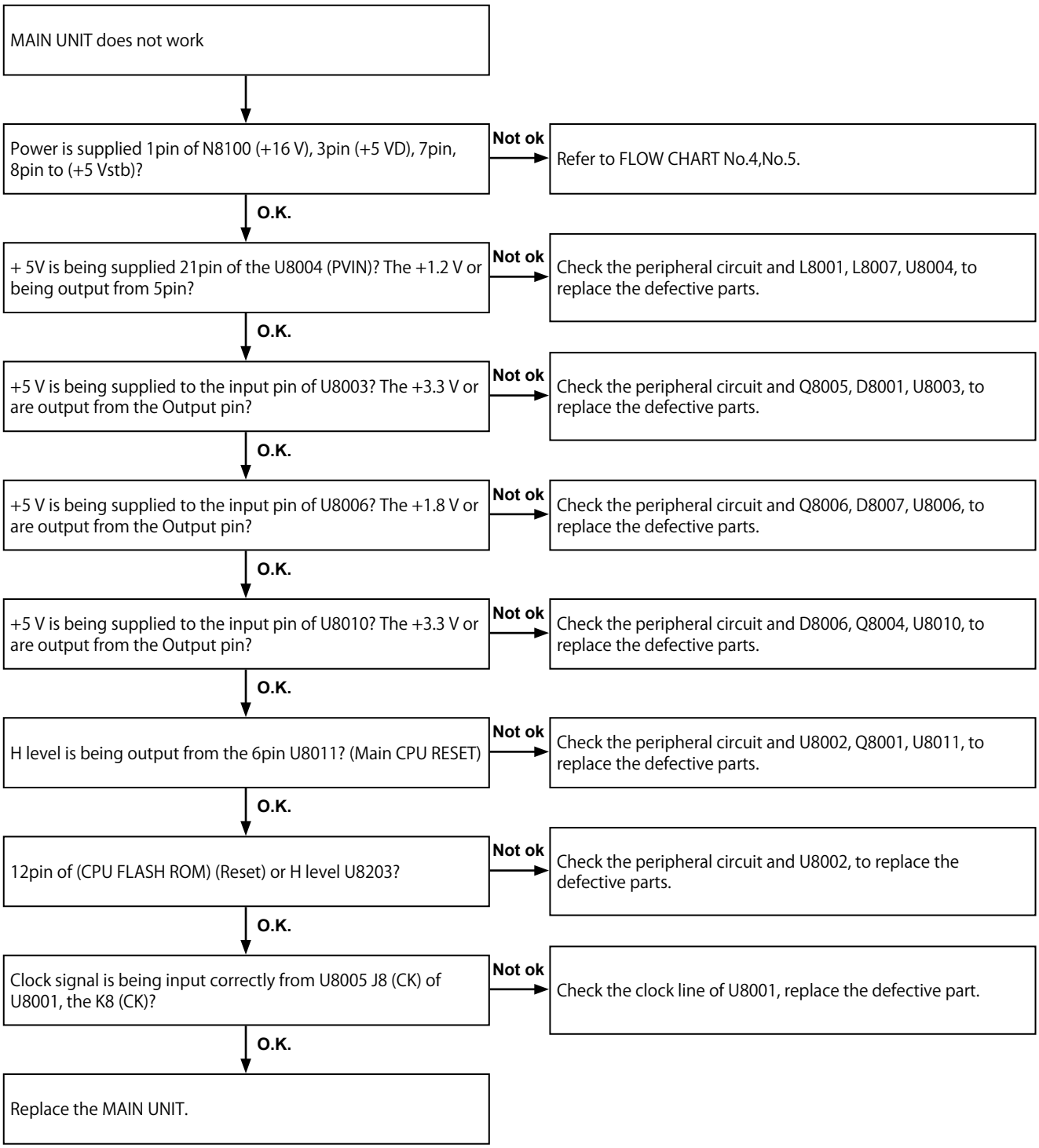

FLOW CHART No.12 (MAIN UNIT)

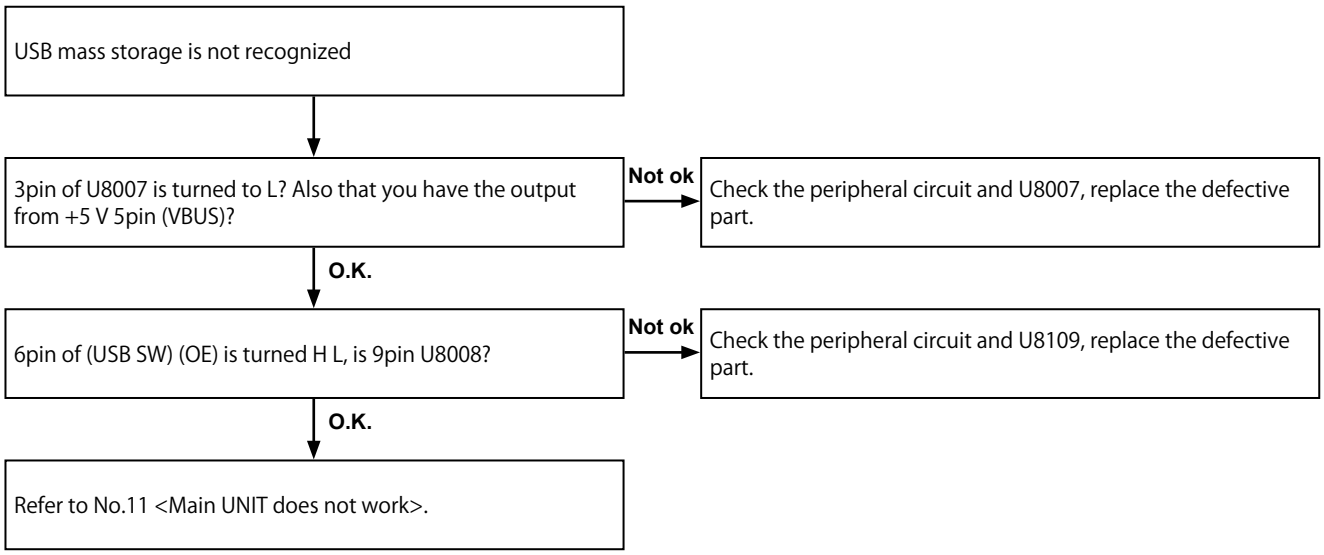

FLOW CHART No.13 (MAIN UNIT)

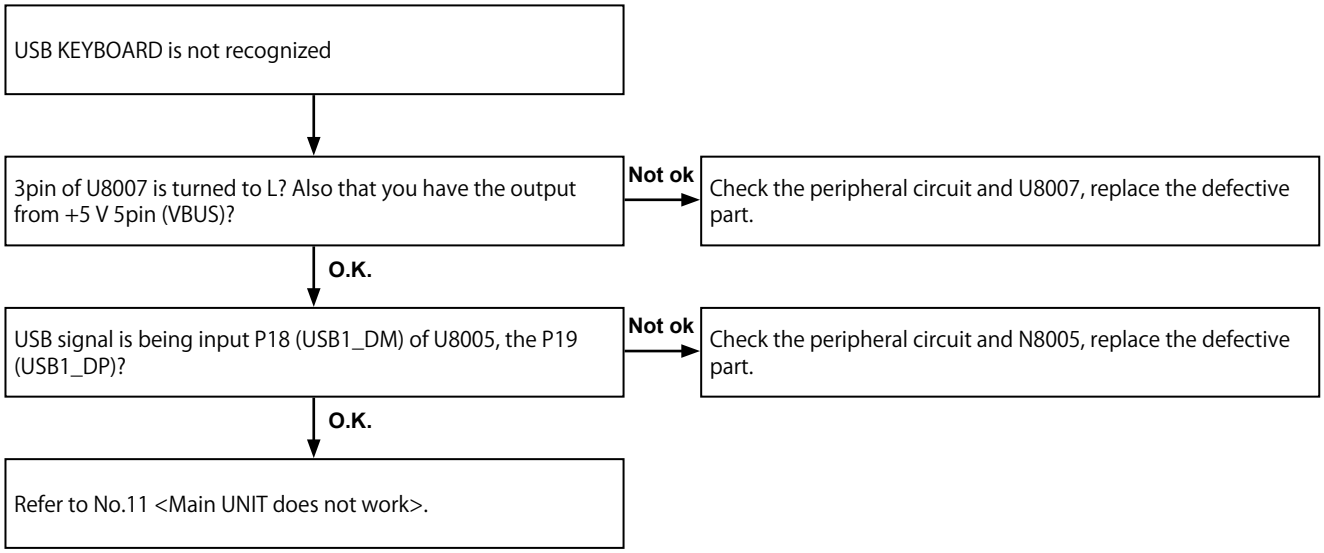

FLOW CHART No.14 (MAIN UNIT)

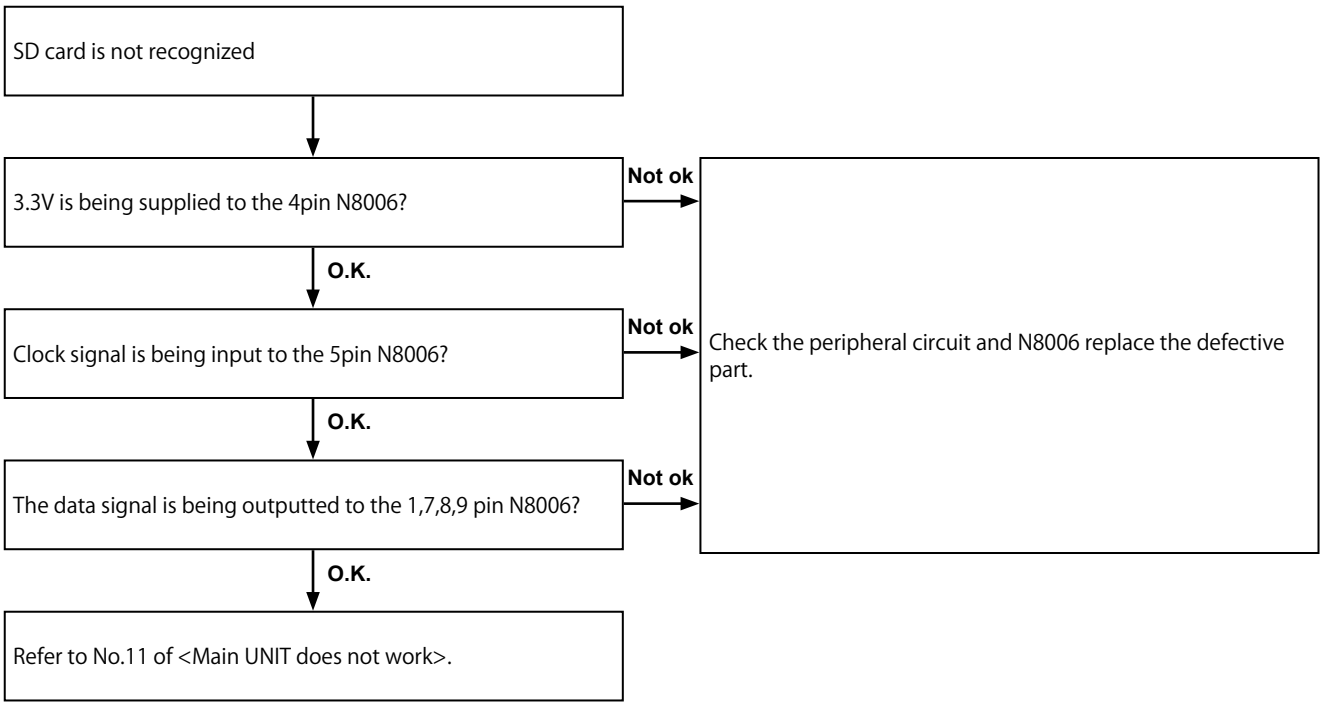

FLOW CHART No.1 (MAIN UNIT)

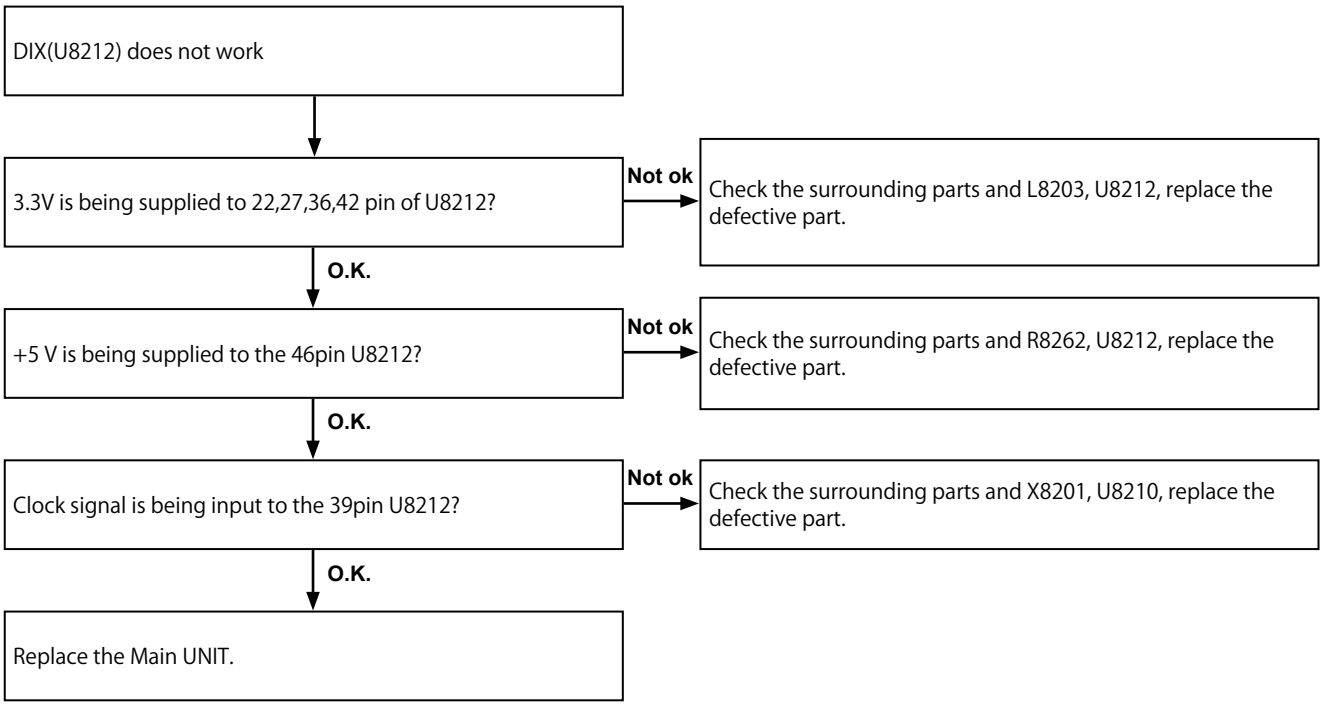

FLOW CHART No.16 (AUDIO UNIT)

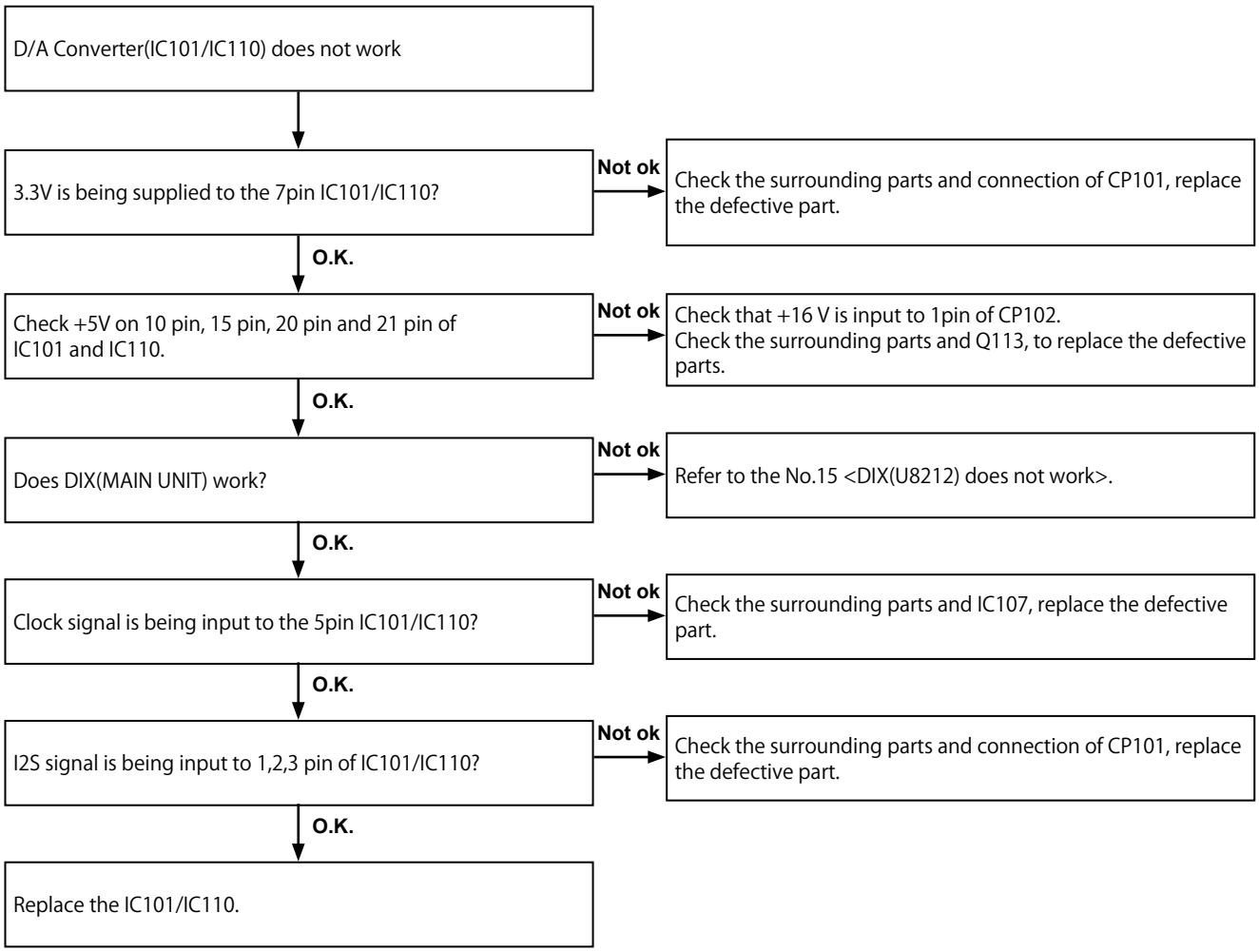

FLOW CHART No.17 (AUDIO UNIT)

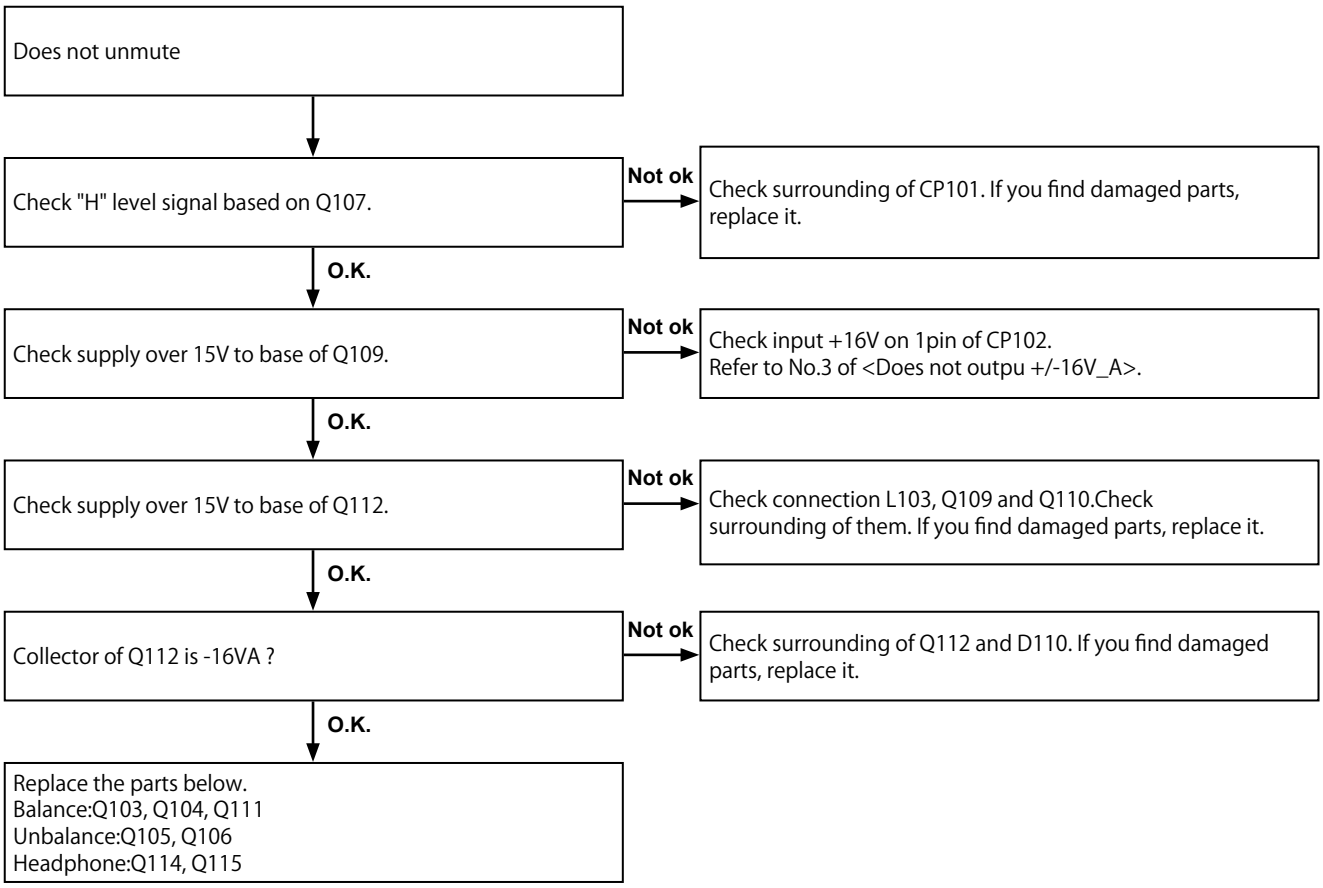

FLOW CHART No.18 (AUDIO UNIT)

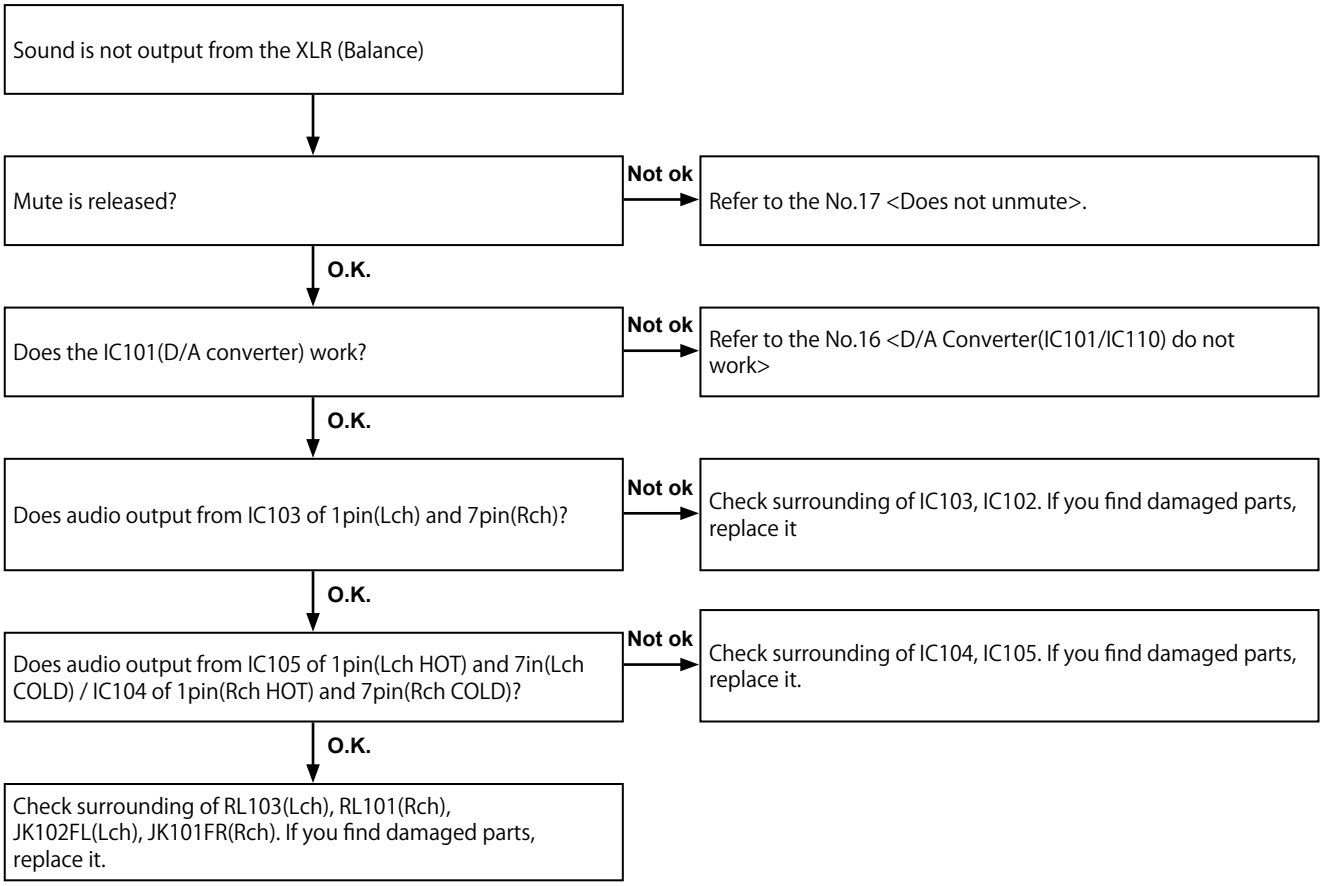

FLOW CHART No.19 (AUDIO UNIT)

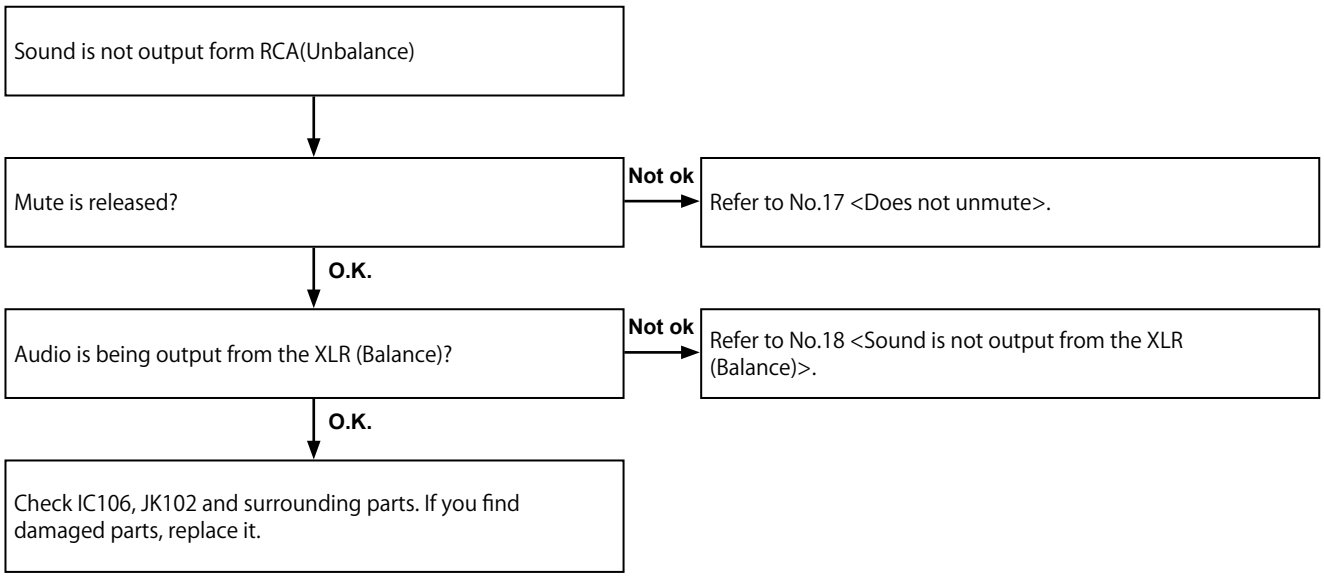

FLOW CHART No.20 (AUDIO UNIT)

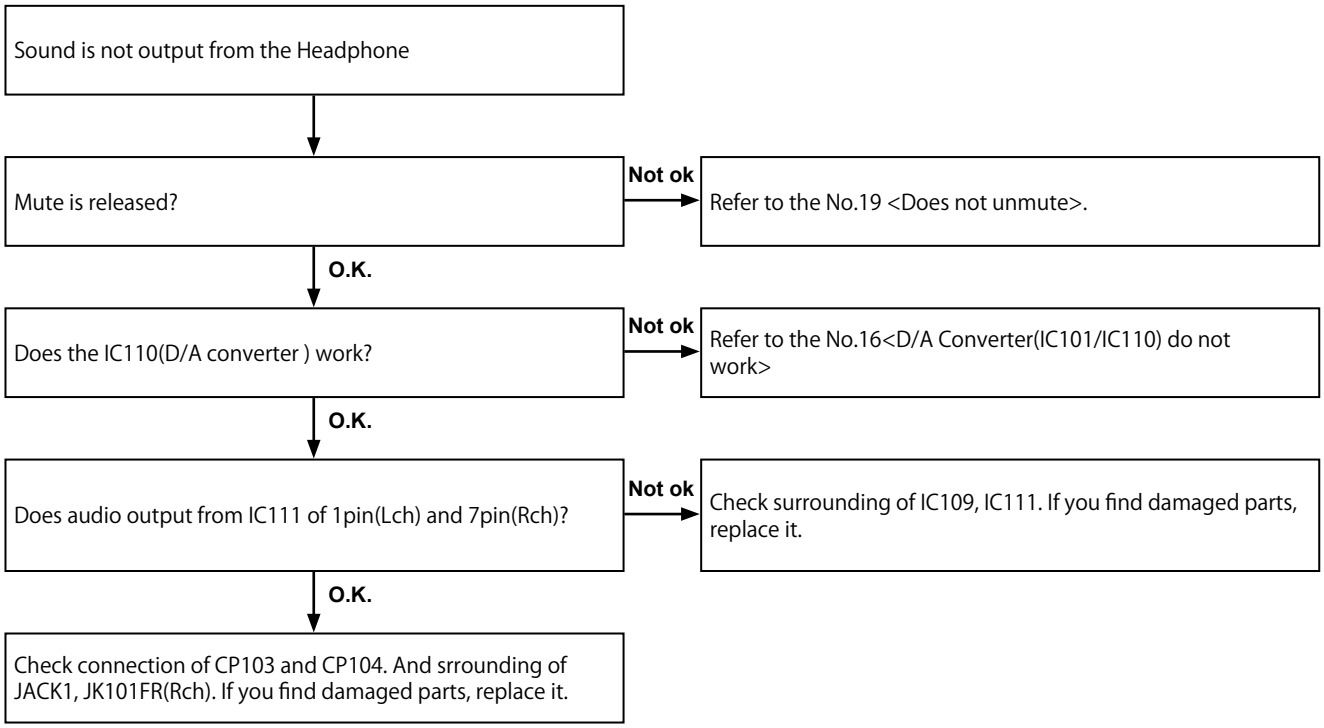

FLOW CHART No.21 (AUDIO UNIT)

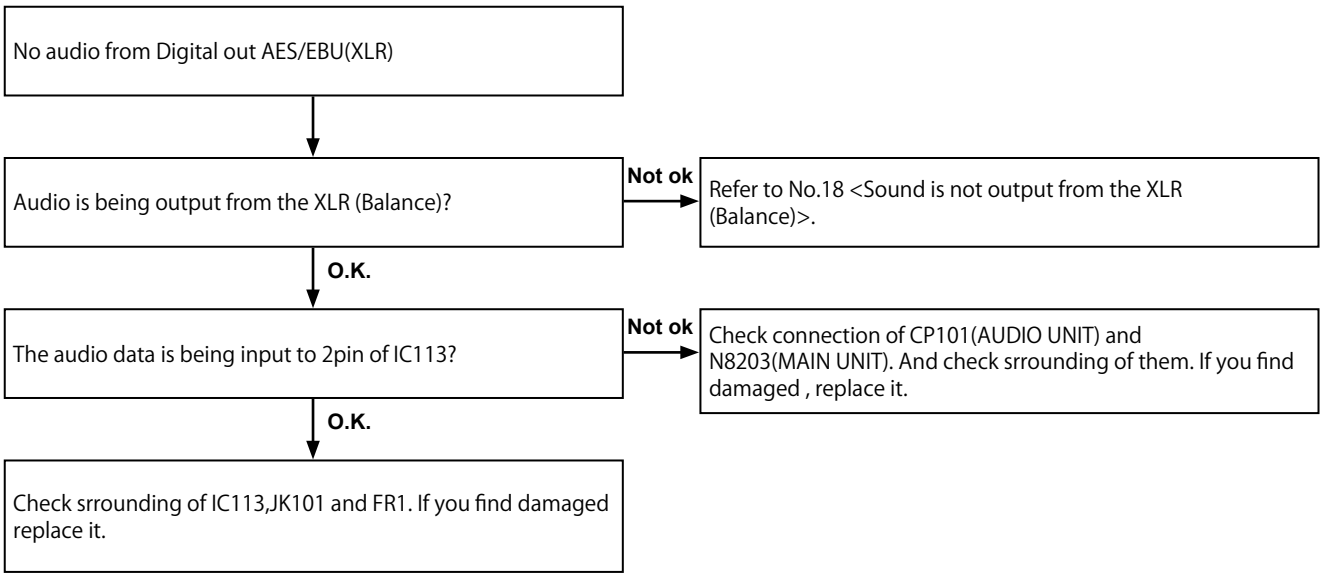

FLOW CHART No.22 (AUDIO UNIT)

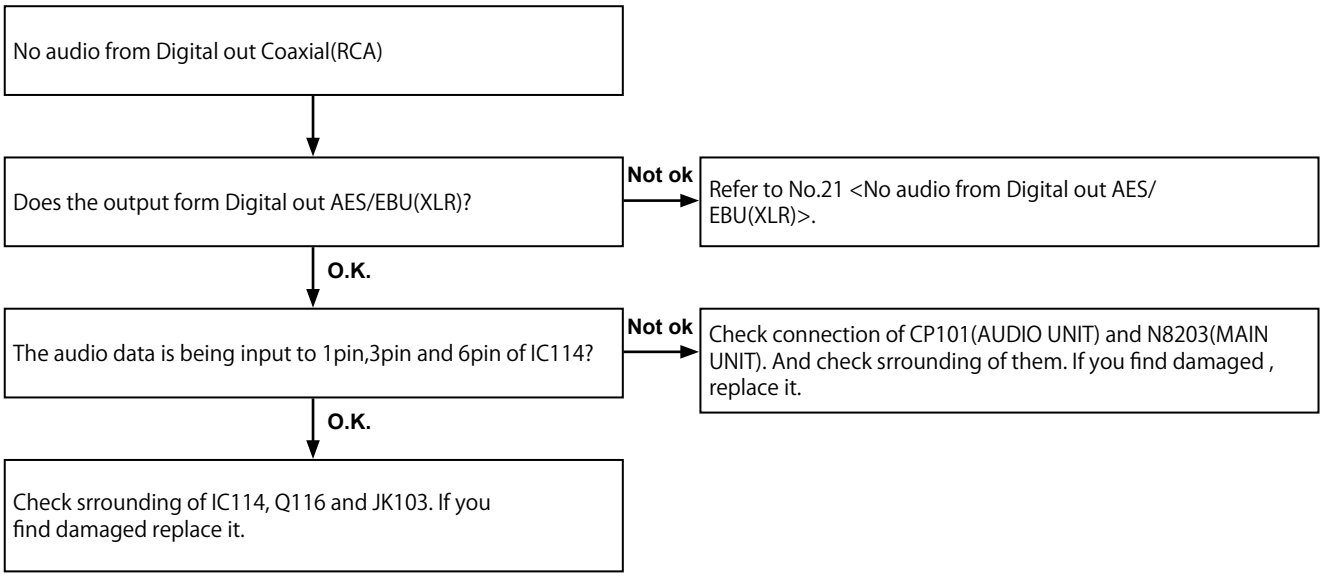

FLOW CHART No.23 (INPUT UNIT)

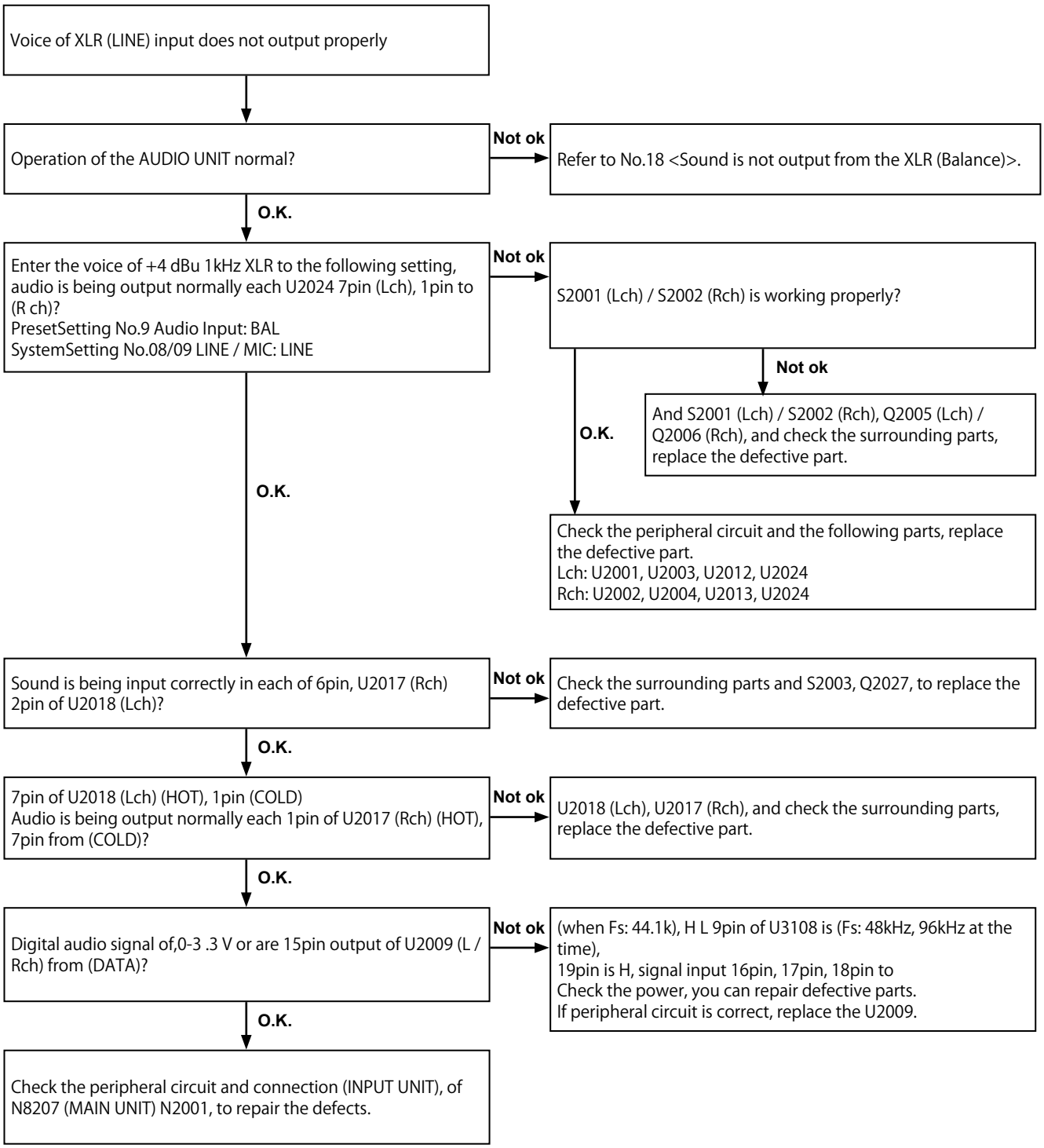

FLOW CHART No.24 (INPUT UNIT)

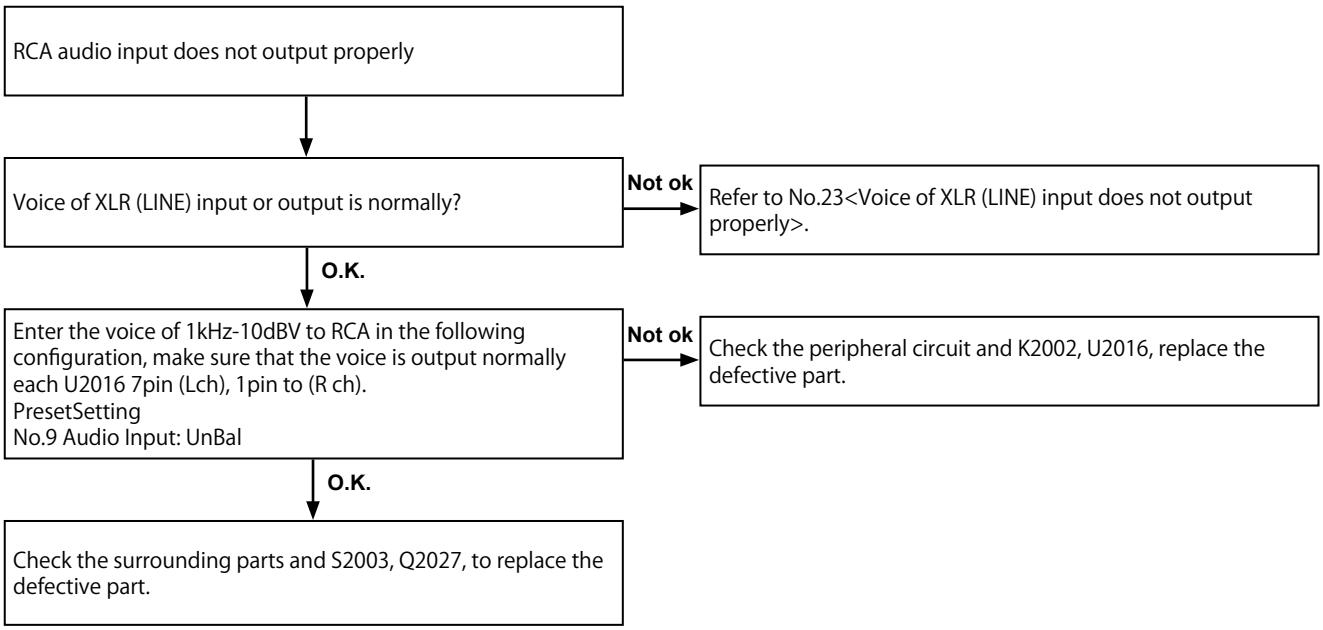

FLOW CHART No.25 (INPUT UNIT)

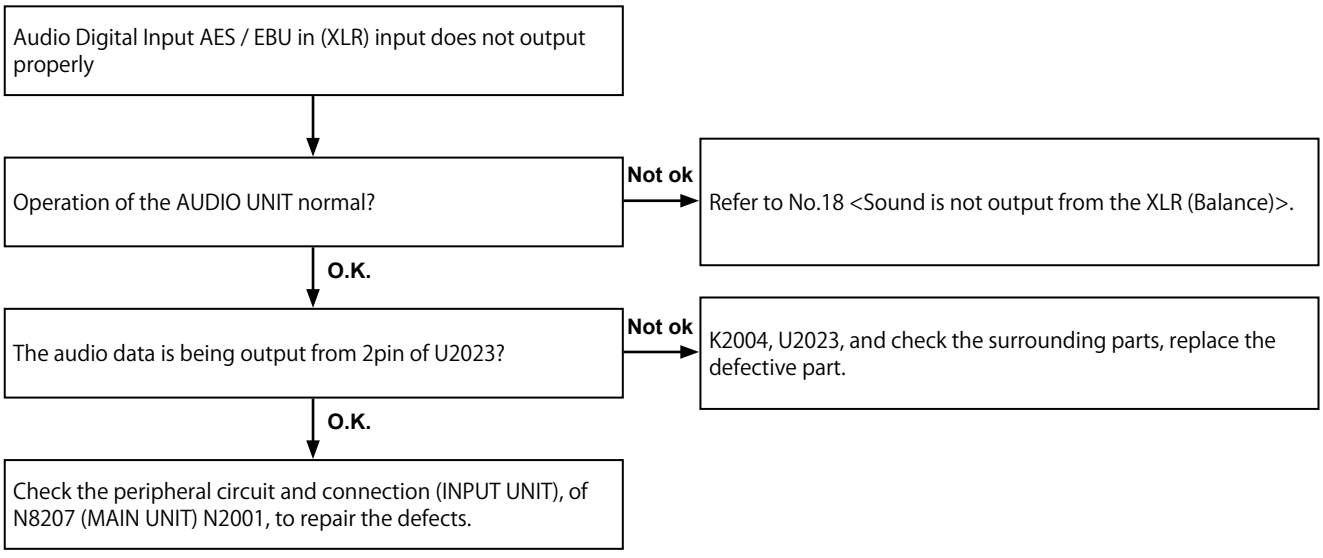

FLOW CHART No.26 (INPUT UNIT)

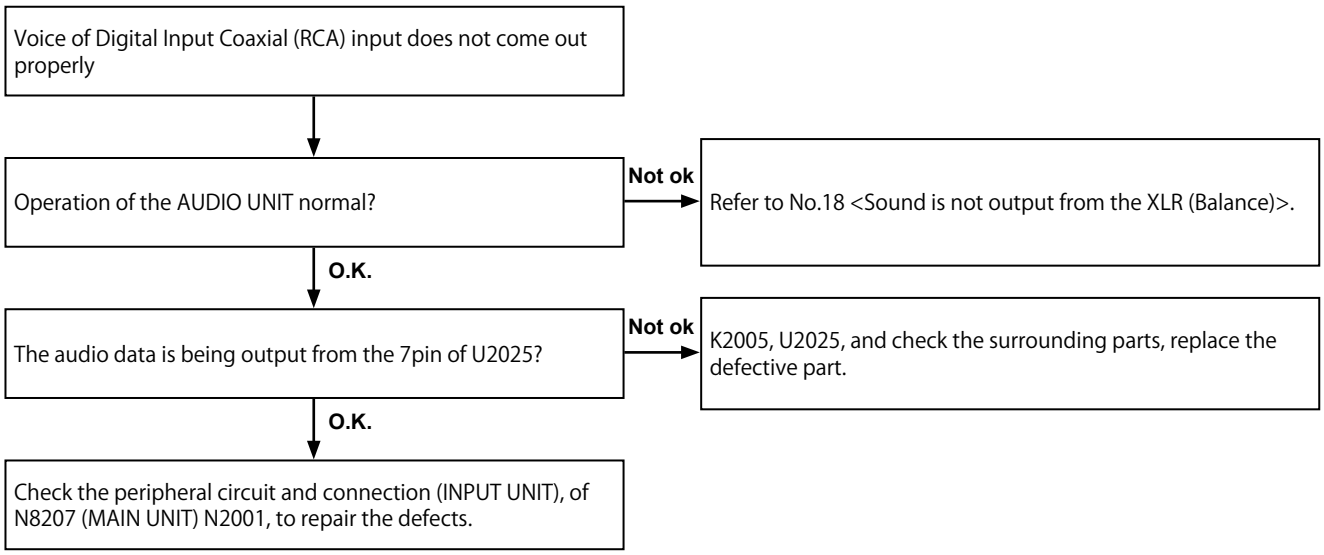

BLOCK DIAGRAM

DN-500R Block Diagram

VER : 0 02 Date : 13/ 2/ 12

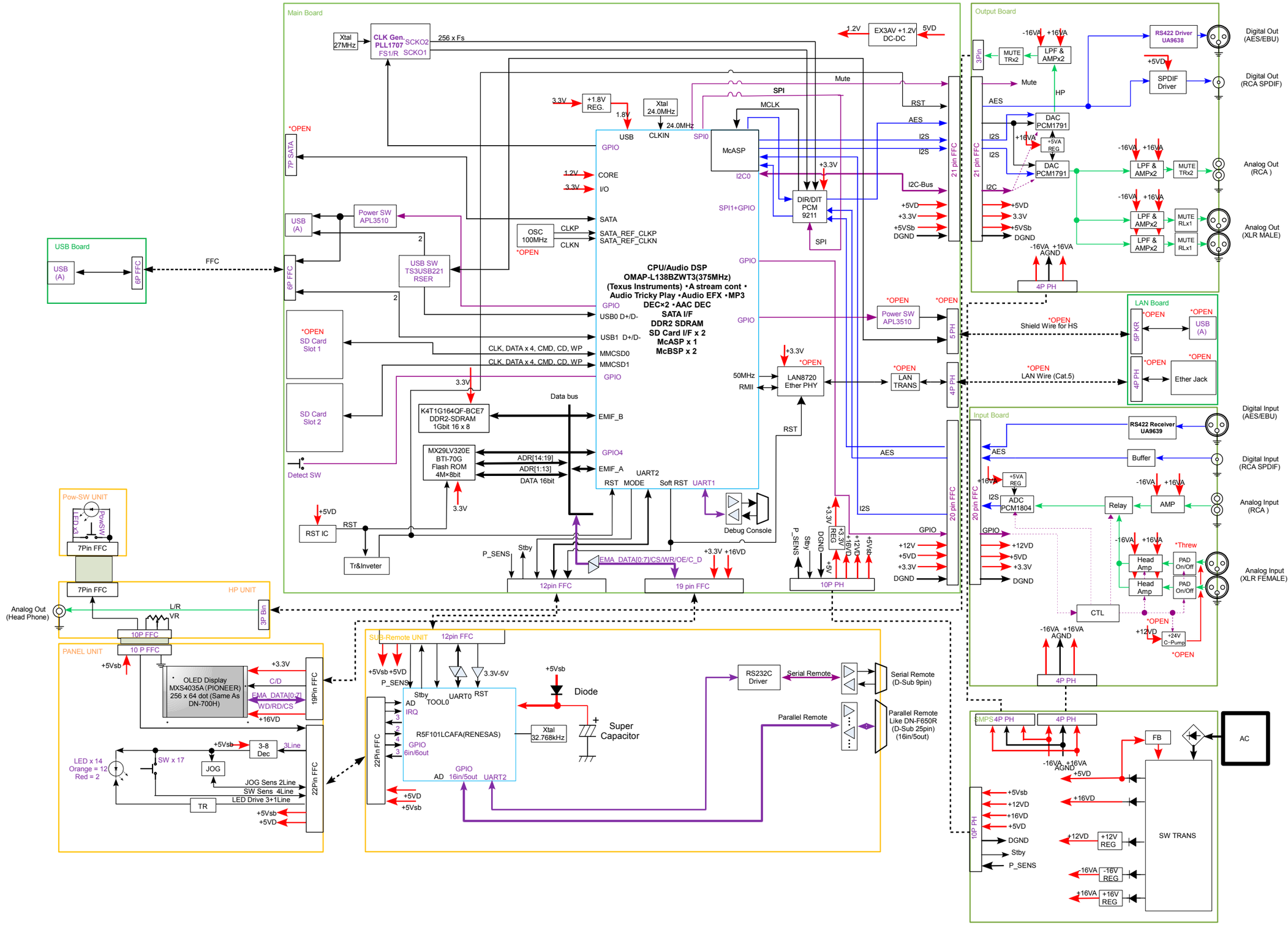

POWER BLOCK DIAGRAM

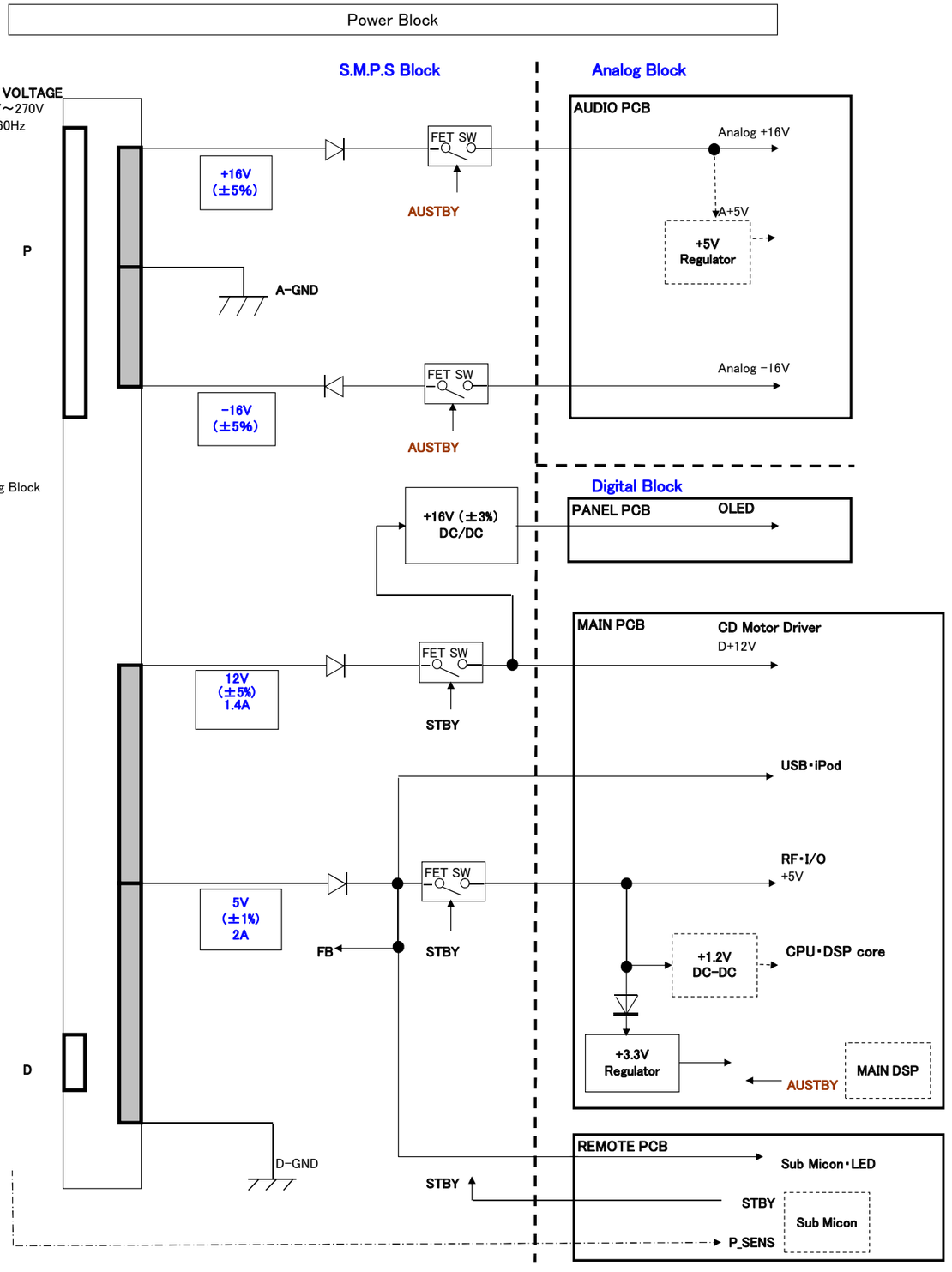

Standby Logic

STBY	Power
Hi	Standby
Lo	ON

Power Sens Logic

LEVEL DIAGRAM

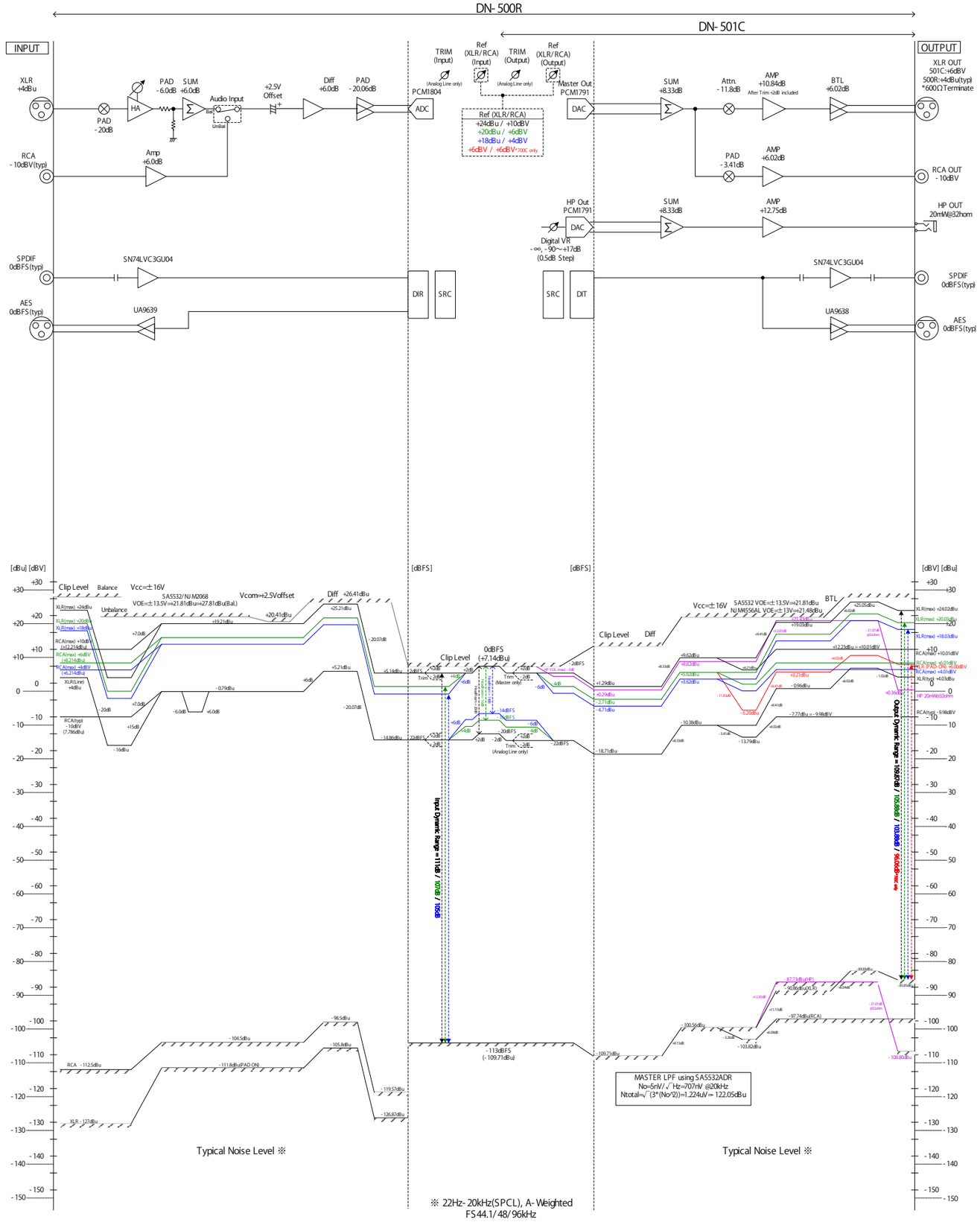

WIRING DIAGRAM

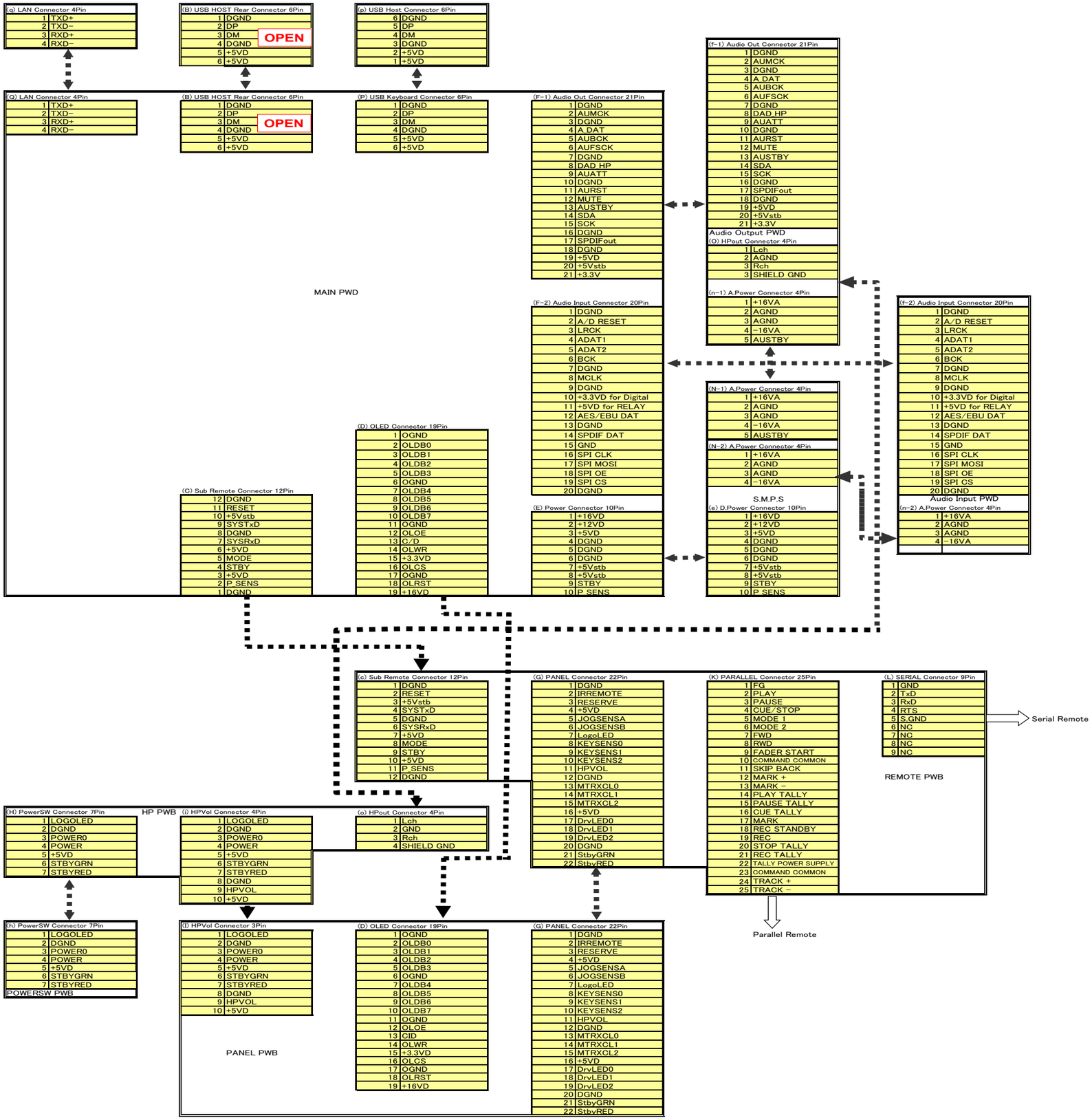

PRINTED WIRING BOARDS

Lead-free Solder
When soldering, use the Lead-free Solder (Sn-Ag-Cu).

SMPS (A SIDE)

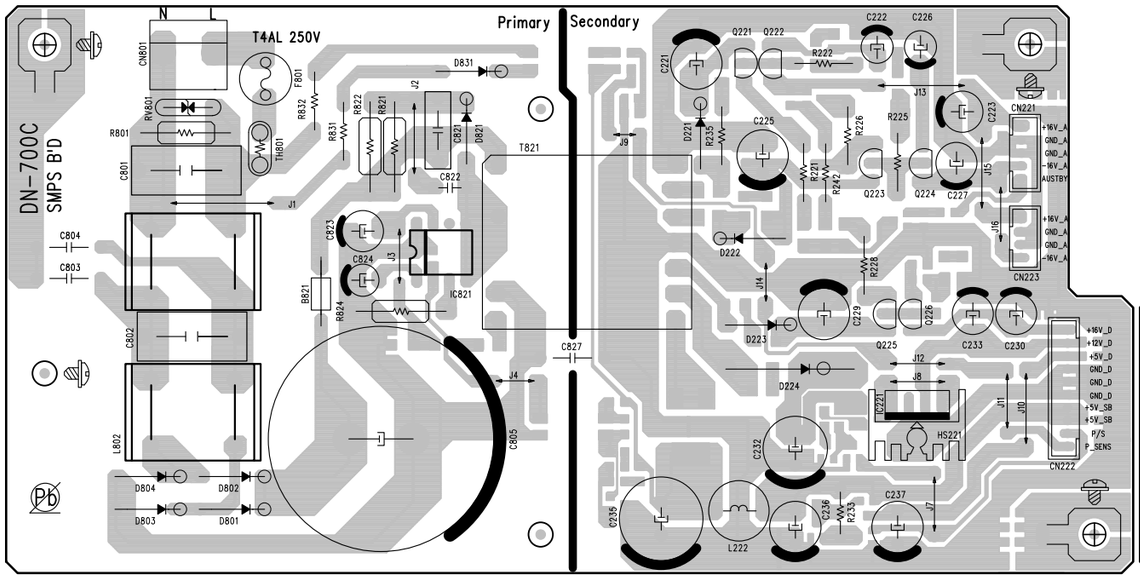

SMPS (B SIDE)

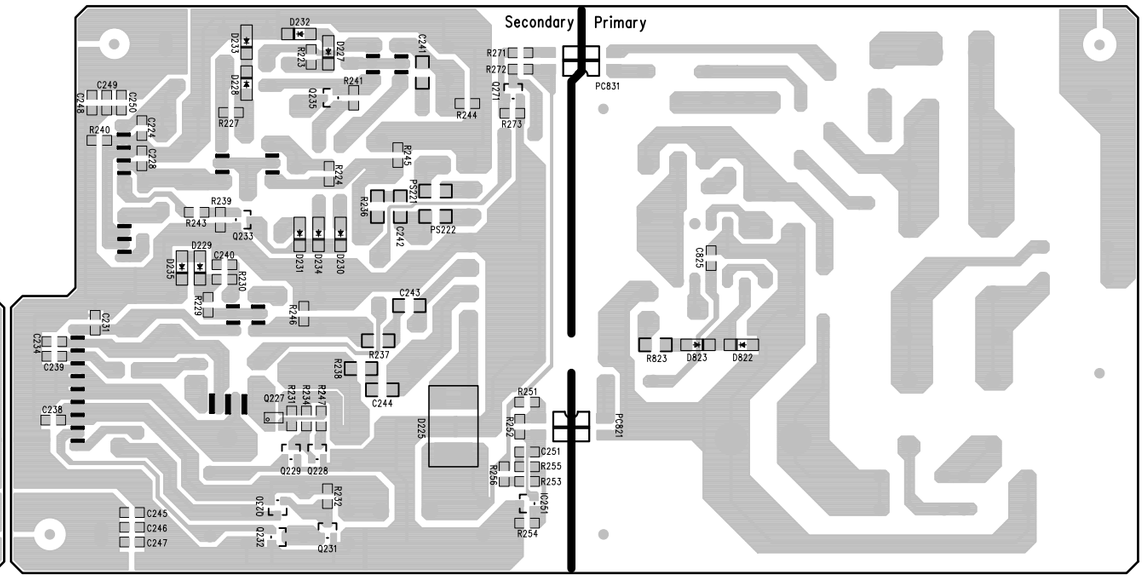

MAIN (A SIDE)

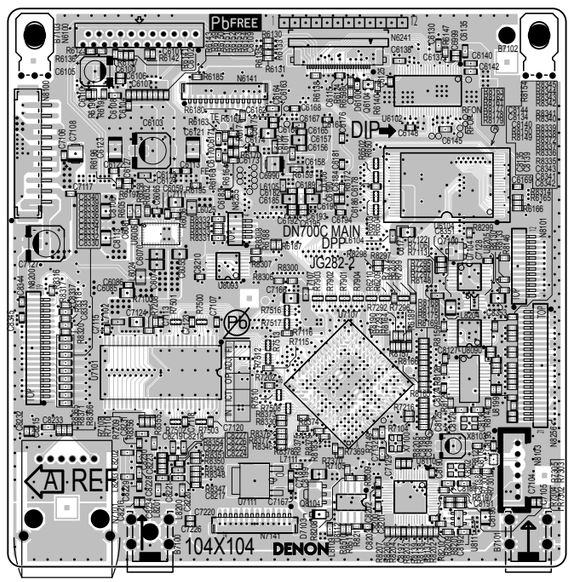

MAIN (B SIDE)

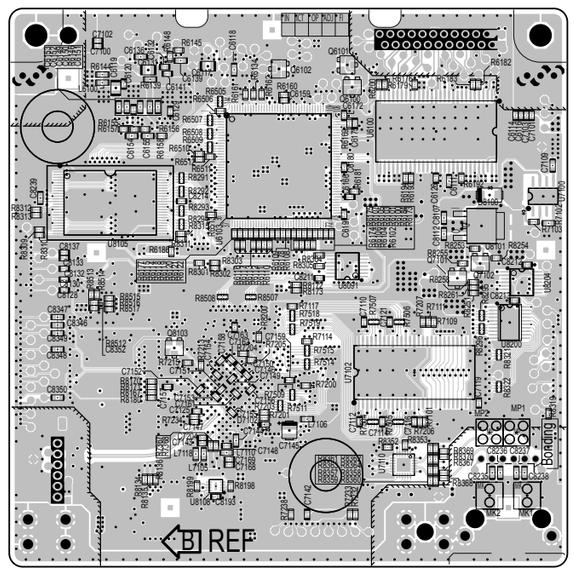

REMOTE (A SIDE)

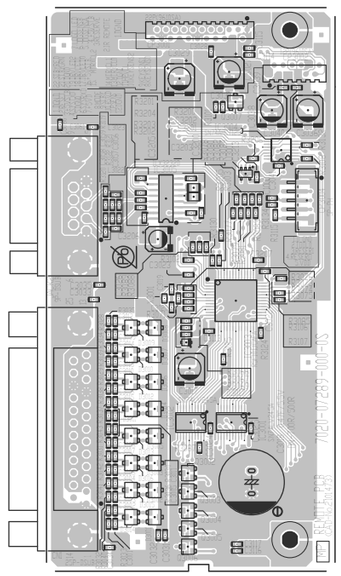

REMOTE (B SIDE)

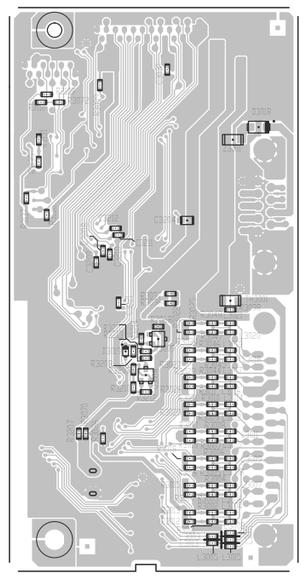

AUDIO (A SIDE)

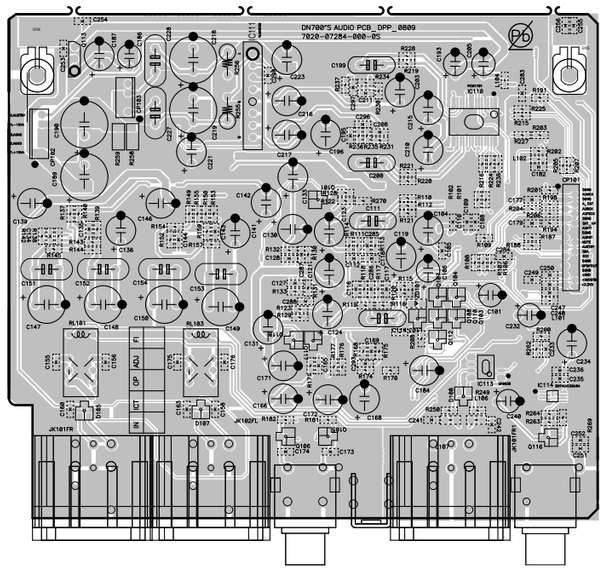

AUDIO (B SIDE)

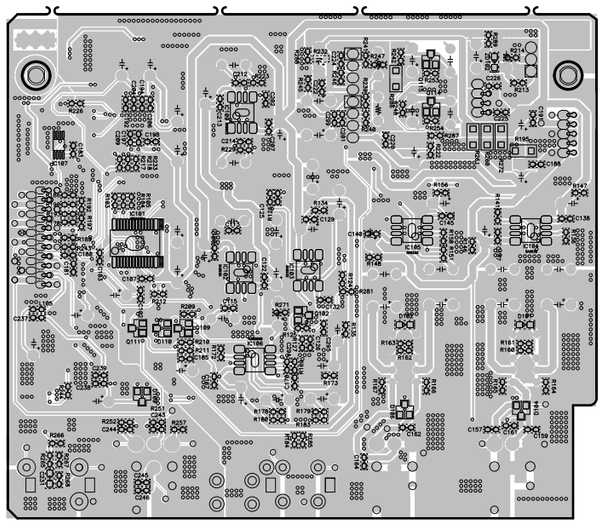

HP (A SIDE)

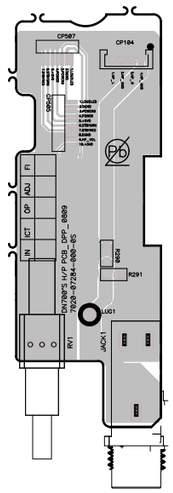

HP (B SIDE)

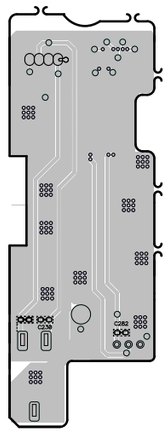

PWR_KEY (A SIDE)

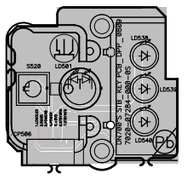

PWR_KEY (B SIDE)

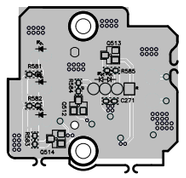

PANEL (A SIDE)

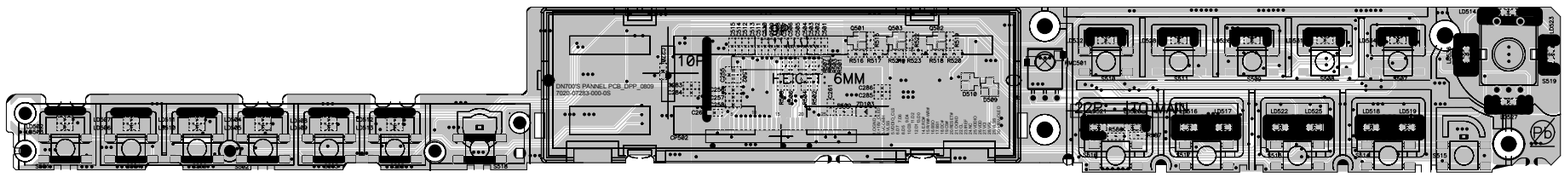

PANEL (B SIDE)

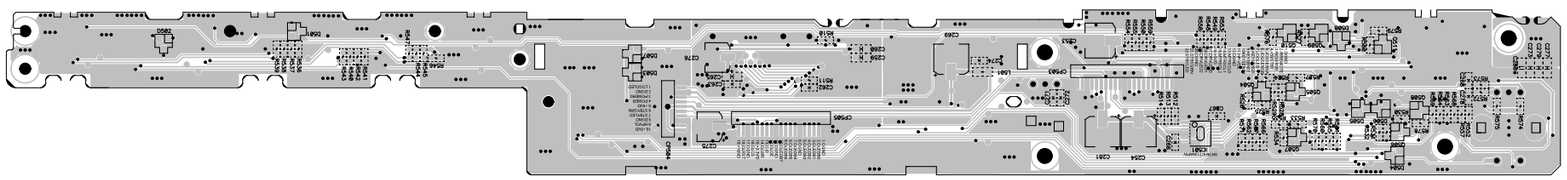

INPUT (A SIDE)

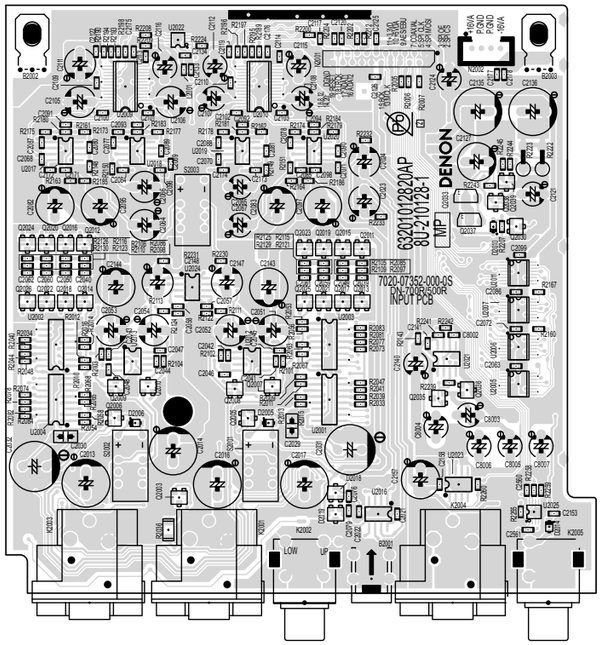

INPUT (B SIDE)

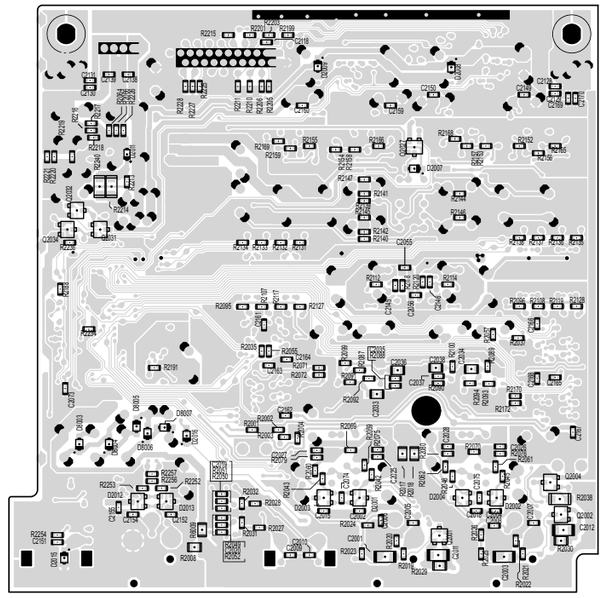

USB (A SIDE)

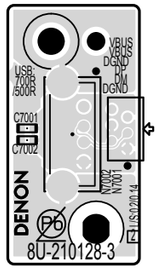

USB (B SIDE)

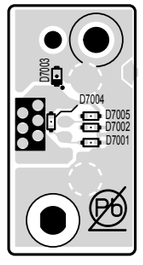

SCHEMATIC DIAGRAMS

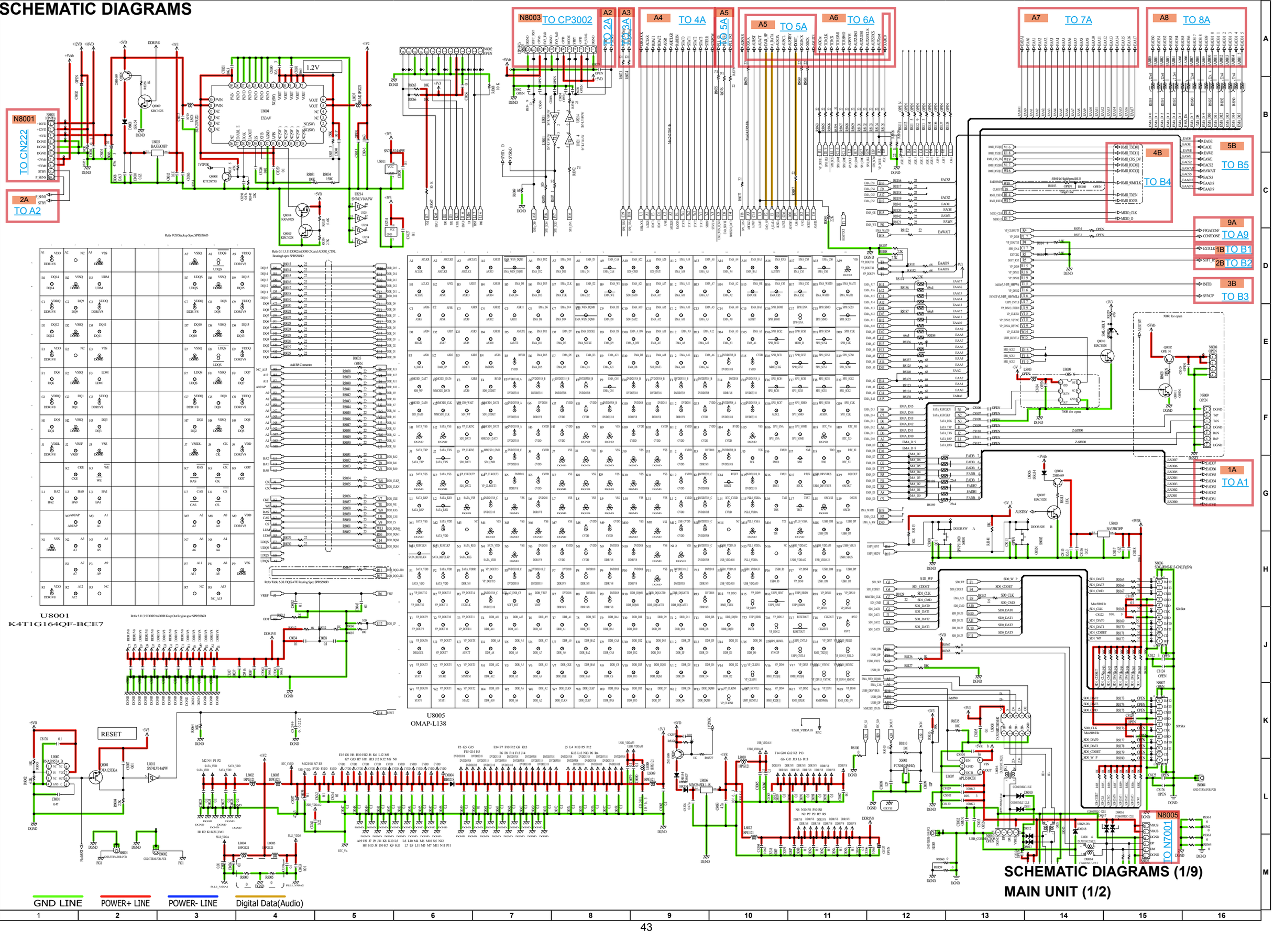

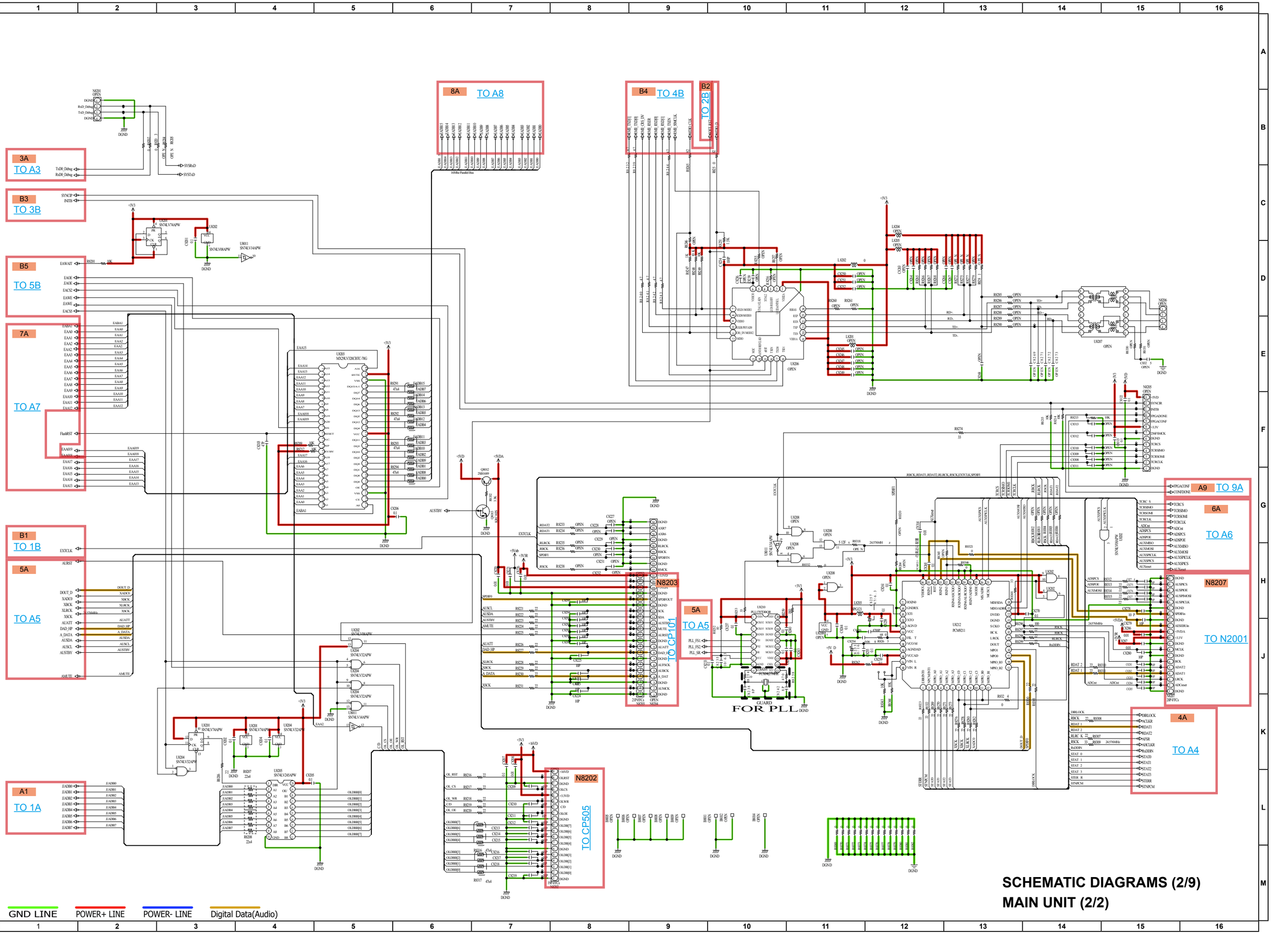

SCHEMATIC DIAGRAMS (2/9)
MAIN UNIT (2/2)

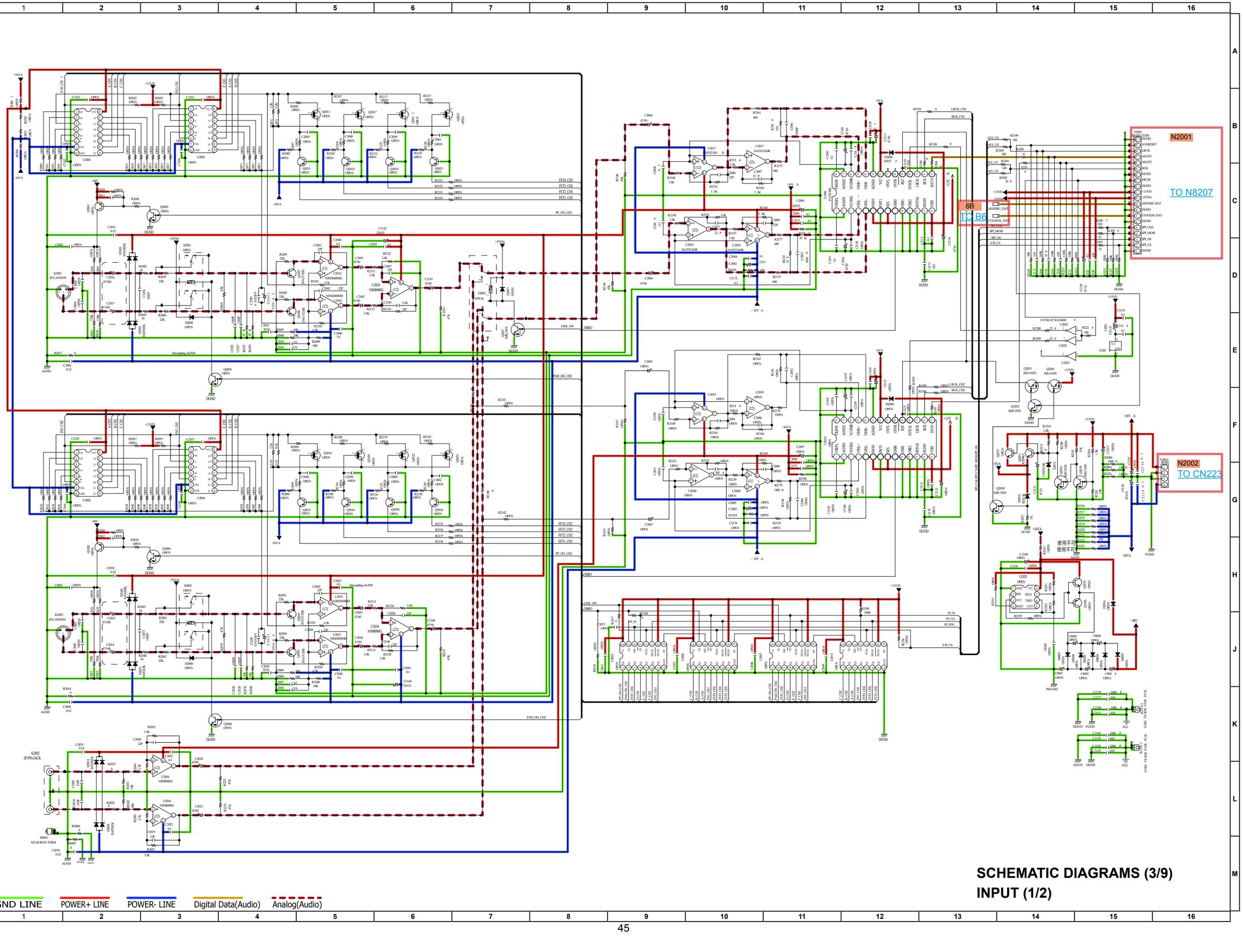

SCHEMATIC DIAGRAMS (3/9)
INPUT (1/2)

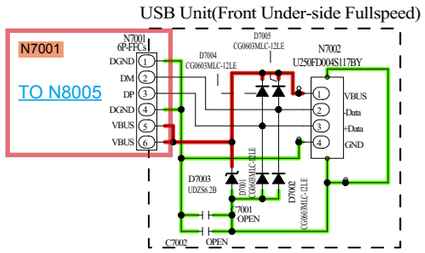

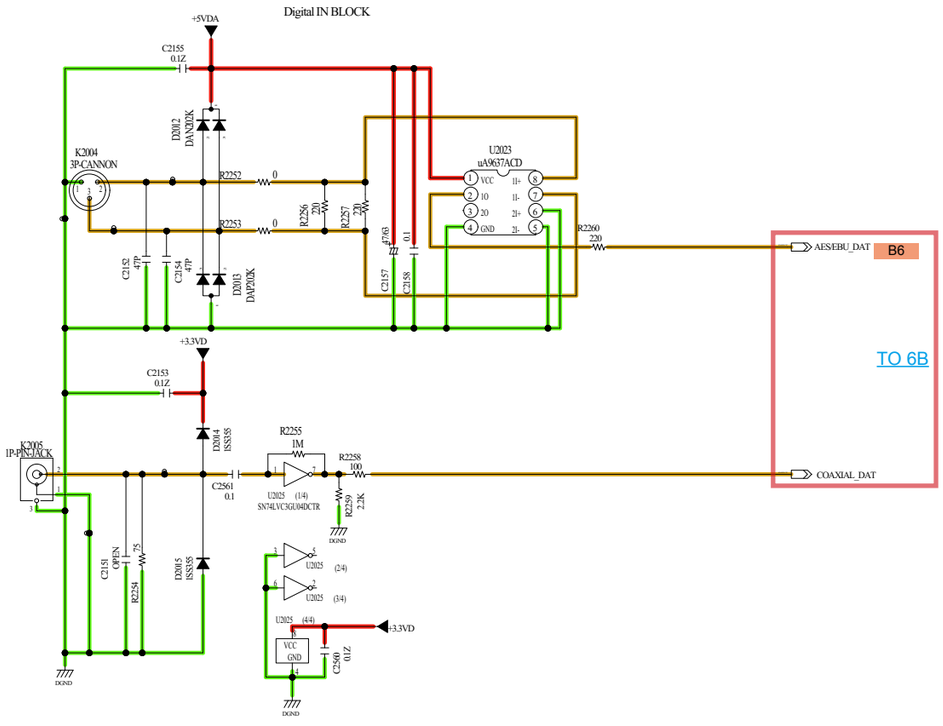

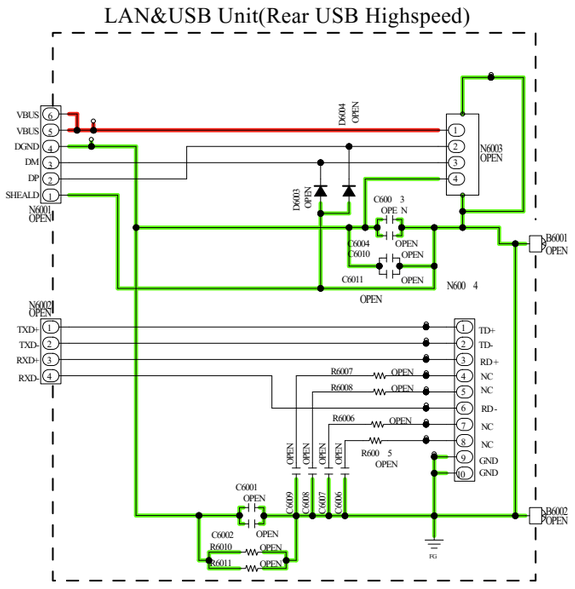

GND LINE POWER+ LINE POWER- LINE Digital Data(Audio)

SCHEMATIC DIAGRAMS (4/9)
INPUT (2/2)

PANEL UNIT

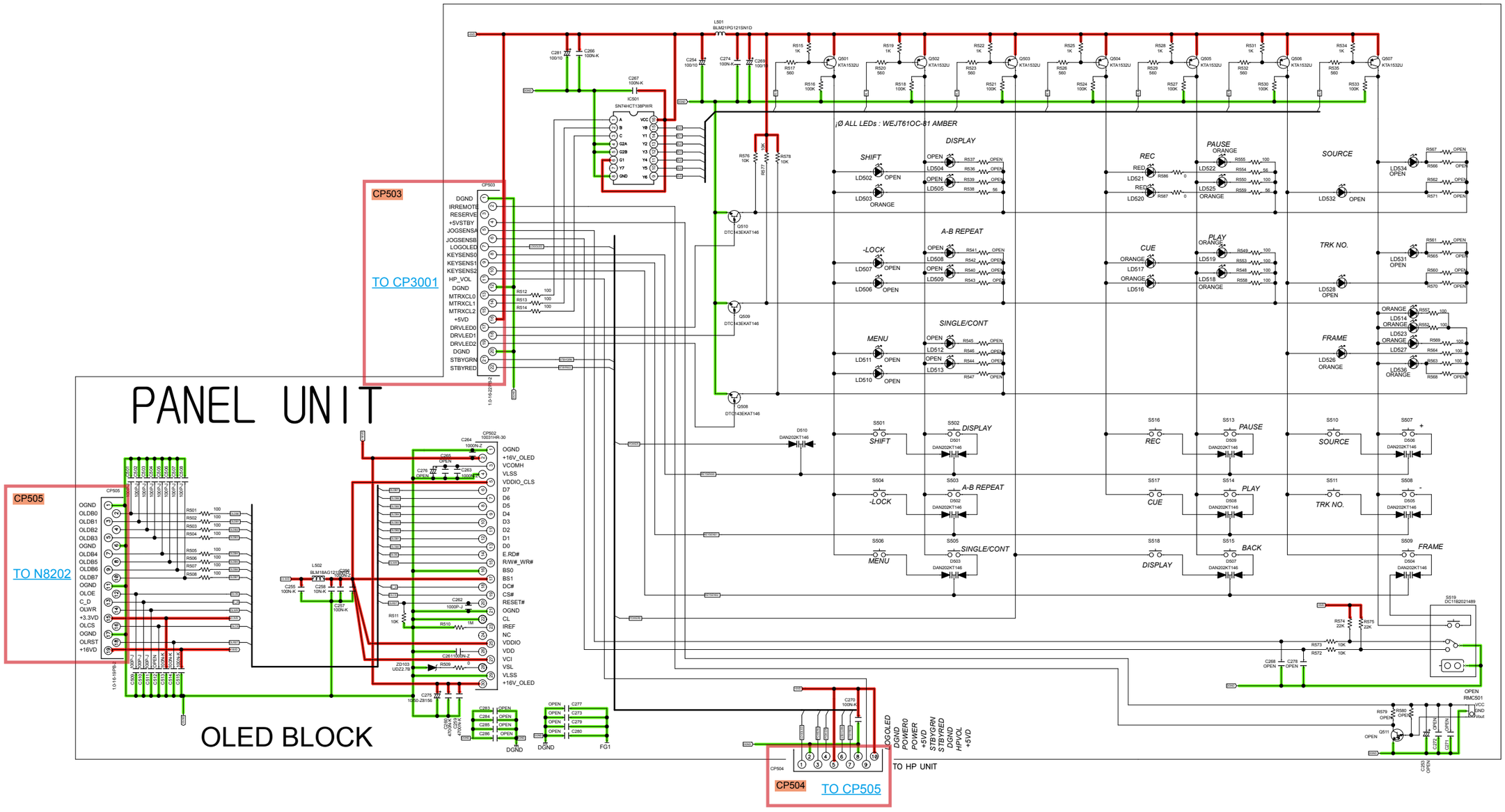

GND LINE POWER+ LINE POWER- LINE

SCHEMATIC DIAGRAMS (5/9)
PANEL UNIT

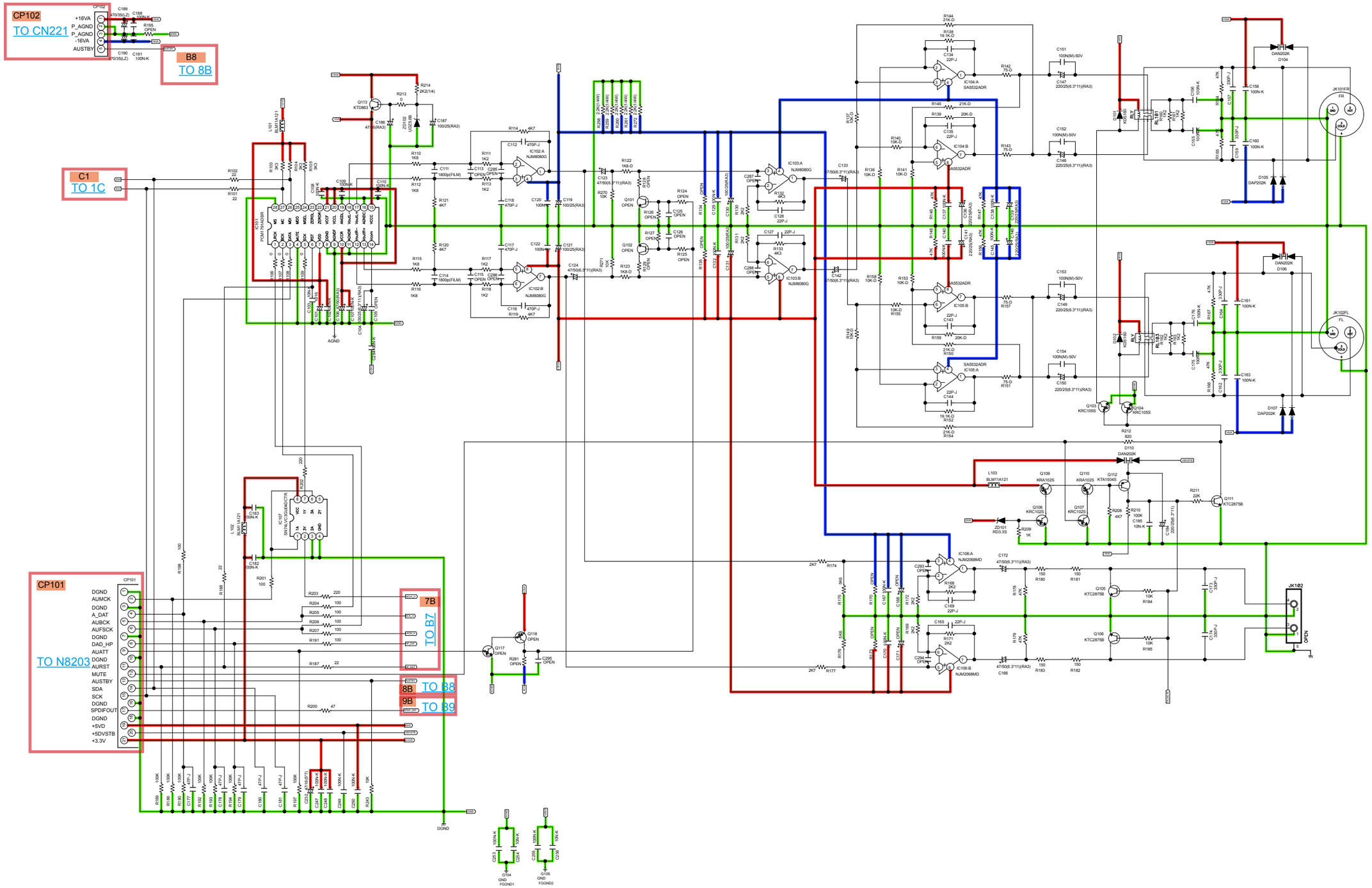

SCHEMATIC DIAGRAMS (6/9)
AUDIO UNIT (1/2) LINEOUT

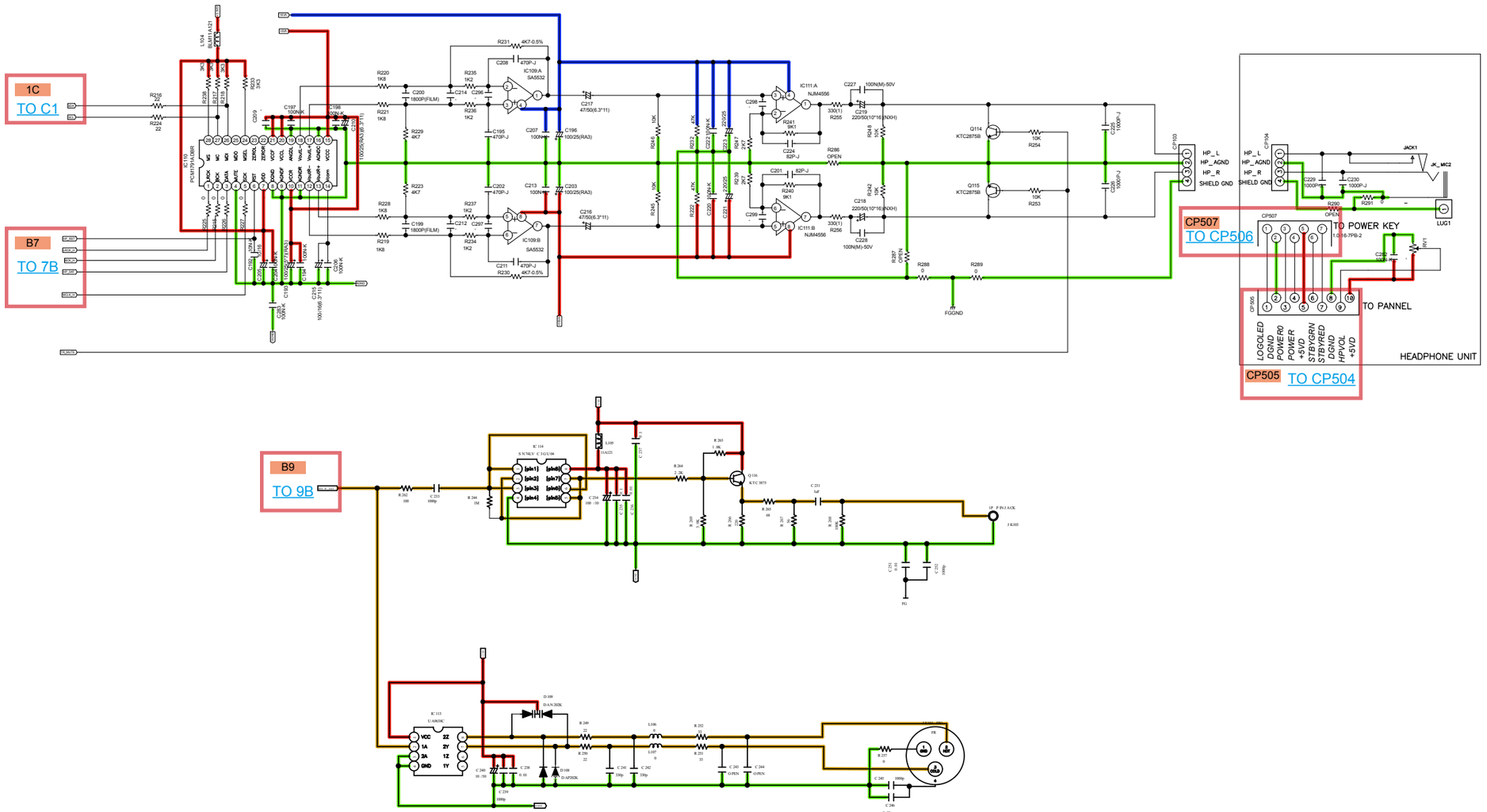

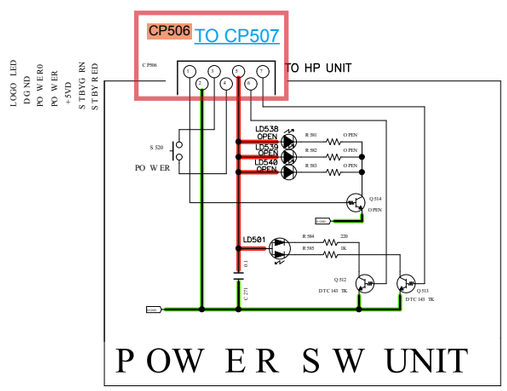

GND LINE POWER+ LINE POWER- LINE Digital Data(Audio)

SCHEMATIC DIAGRAMS (7/9)
AUDIO UNIT (2/2) HP

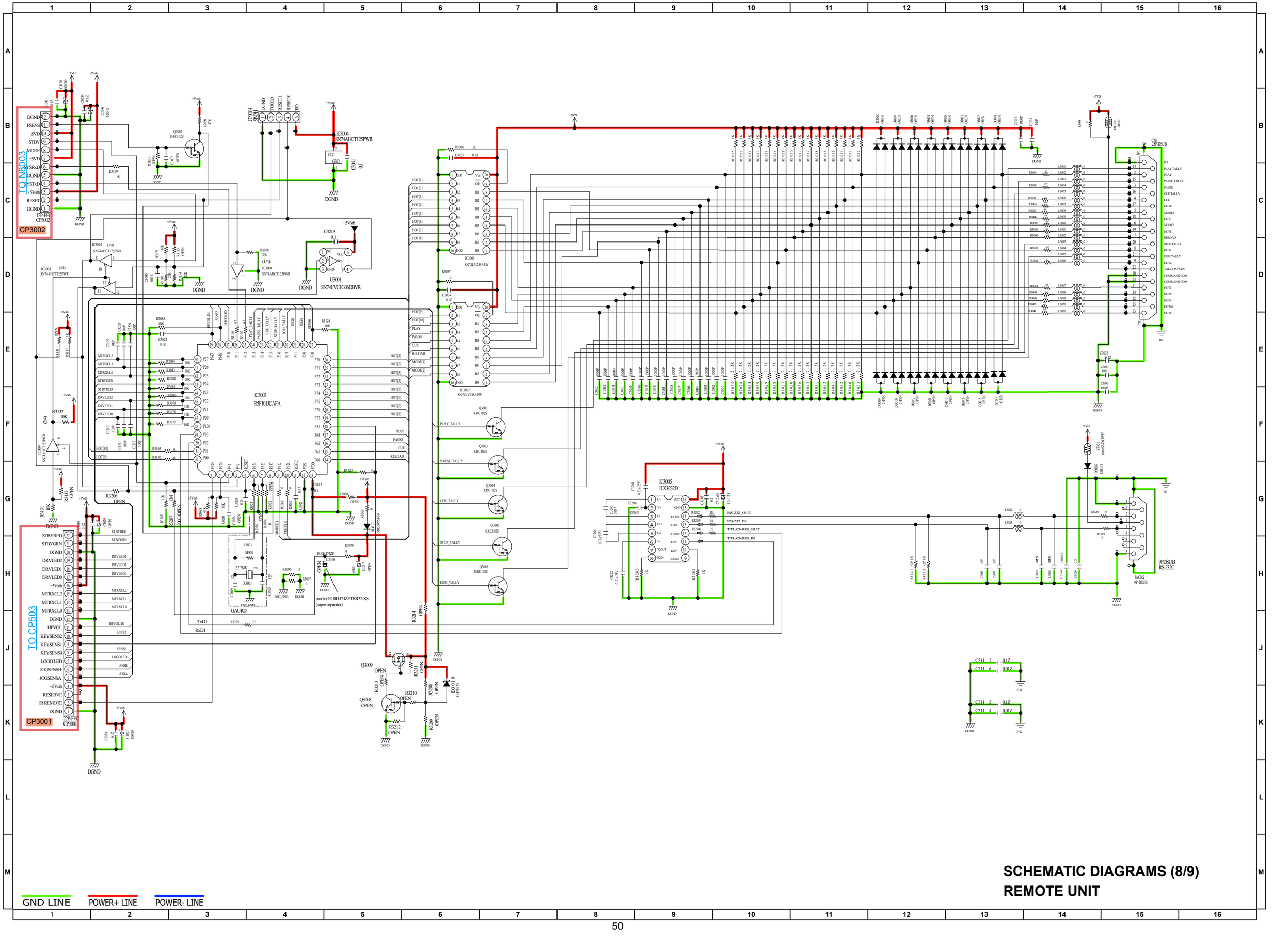

SCHEMATIC DIAGRAMS (8/9)
REMOTE UNIT

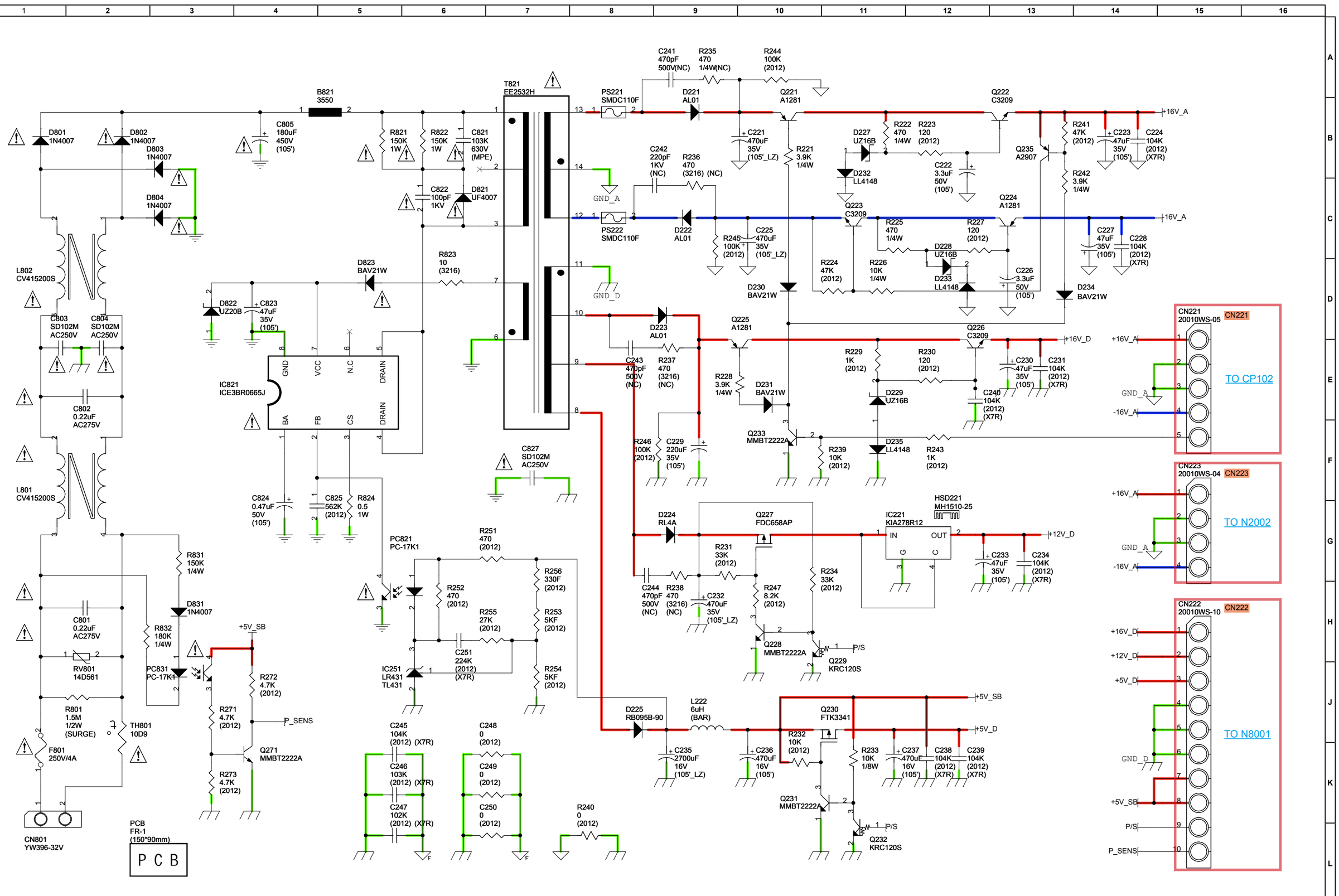

⚠ : To reduce the risk of electric shock, leakage current or resistance measurement shall be carried out before the appliance returned to the customer

SCHEMATIC DIAGRAMS (9/9)
SMPS UNIT

GND LINE POWER+ LINE POWER- LINE

EXPLODED VIEW

Refer to the last chapter for the part list.

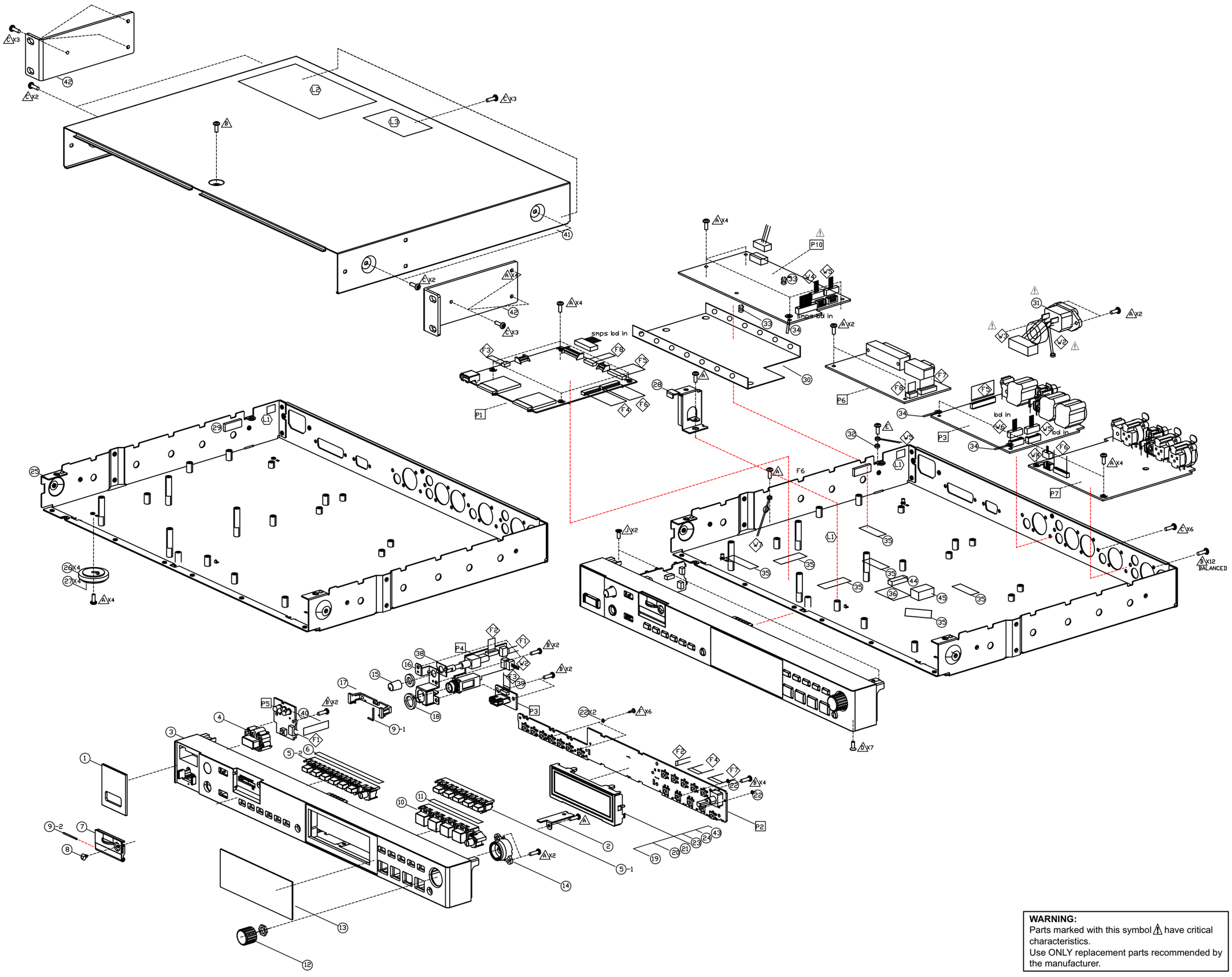

PACKING VIEW

Refer to the last chapter for the part list.

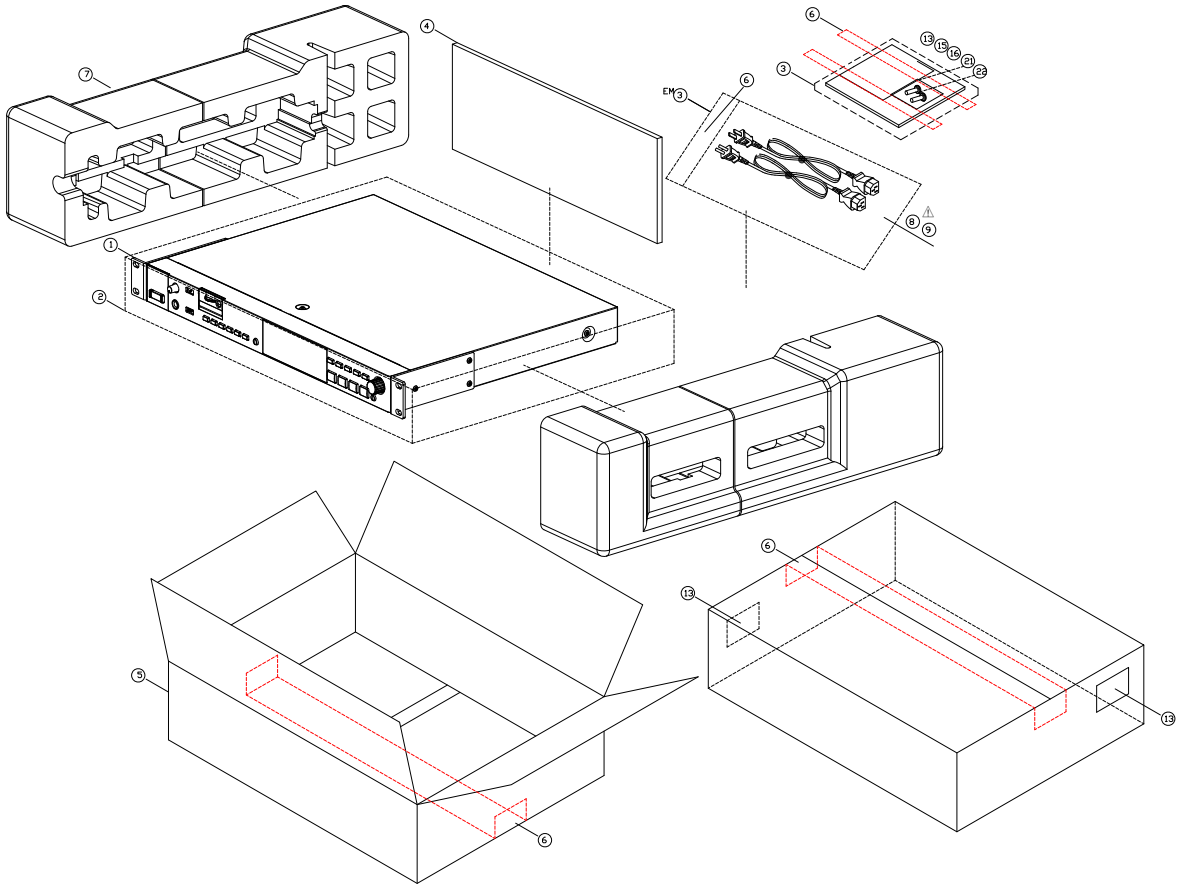

SEMICONDUCTORS

Only major semiconductors are shown, general semiconductors etc. are omitted to list.
The semiconductor which described a detailed drawing in a schematic diagram are omitted to list.

1. IC's

K4T1G164QF-BCE7 (MAIN : U8001)

	1	2	3	4	5	6	7	8	9
A	V_{DD}	NC	V_{SS}				V_{SSQ}	$\overline{UDQS}$	V_{DDQ}
B	DQ14	V_{SSQ}	UDM				UDQS	V_{SSQ}	DQ15
C	V_{DDQ}	DQ9	V_{DDQ}				V_{DDQ}	DQ8	V_{DDQ}
D	DQ12	V_{SSQ}	DQ11				DQ10	V_{SSQ}	DQ13
E	V_{DD}	NC	V_{SS}				V_{SSQ}	$\overline{LDQS}$	V_{DDQ}
F	DQ6	V_{SSQ}	LDM				LDQS	V_{SSQ}	DQ7
G	V_{DDQ}	DQ1	V_{DDQ}				V_{DDQ}	DQ0	V_{DDQ}
H	DQ4	V_{SSQ}	DQ3				DQ2	V_{SSQ}	DQ5
J	V_{DDL}	V_{REF}	V_{SS}				V_{SSDL}	CK	V_{DD}
K		CKE	$\overline{WE}$				$\overline{RAS}$	$\overline{CK}$	ODT
L	BA2	BA0	BA1				$\overline{CAS}$	$\overline{CS}$	
M		A10/AP	A1				A2	A0	V_{DD}
N	V_{SS}	A3	A5				A6	A4	
P		A7	A9				A11	A8	V_{SS}
R	V_{DD}	A12	NC				NC	NC	

NOTE : V_{DDL} and V_{SSDL} are power and ground for the DLL. It is recommended that they be isolated on the device from V_{DD}, V_{DDQ}, V_{SS}, and V_{SSQ}.

Ball Locations (x16)

● **Populated ball**
\+ **Ball not populated**

Top view
(See the balls through package)

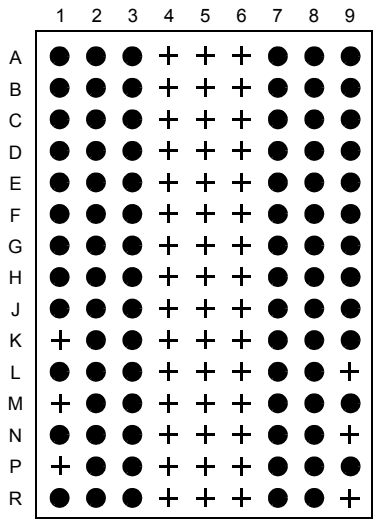

Terminal Function K4T1G164QF-BCE7

Symbol	Type	Function
CK, $\overline{CK}$	Input	**Clock:** CK and $\overline{CK}$ are differential clock inputs. All address and control input signals are sampled on the crossing of the positive edge of CK and negative edge of $\overline{CK}$. Output (read) data is referenced to the crossings of CK and $\overline{CK}$ (both directions of crossing).
CKE	Input	**Clock Enable:** CKE HIGH activates, and CKE Low deactivates, internal clock signals and device input buffers and output drivers. Taking CKE Low provides Precharge Power-Down and Self Refresh operation (all banks idle), or Active Power-Down (row Active in any bank). CKE is synchronous for power down entry and exit, and for self refresh entry. CKE is asynchronous for self refresh exit. After V_{REF} has become stable during the power on and initialization sequence, it must be maintained for proper operation of the CKE receiver. For proper self-refresh entry and exit, V_{REF} must be maintained to this input. CKE must be maintained high throughout read and write accesses. Input buffers, excluding CK, $\overline{CK}$, ODT and CKE are disabled during power-down. Input buffers, excluding CKE, are disabled during self refresh.
$\overline{CS}$	Input	**Chip Select:** All commands are masked when $\overline{CS}$ is registered HIGH. $\overline{CS}$ provides for external Rank selection on systems with multiple Ranks. $\overline{CS}$ is considered part of the command code.
ODT	Input	**On Die Termination:** ODT (registered HIGH) enables termination resistance internal to the DDR2 SDRAM. When enabled, ODT is only applied to each DQ, DQS, $\overline{DQS}$, RDQS, $\overline{RDQS}$, and DM signal for x4/x8 configurations. For x16 configuration ODT is applied to each DQ, UDQS/$\overline{UDQS}$, LDQS/$\overline{LDQS}$, UDM, and LDM signal. The ODT pin will be ignored if the Extended Mode Register (EMRS(1)) is programmed to disable ODT.
$\overline{RAS}$, $\overline{CAS}$, $\overline{WE}$	Input	**Command Inputs:** $\overline{RAS}$, $\overline{CAS}$ and $\overline{WE}$ (along with $\overline{CS}$) define the command being entered.
DM	Input	**Input Data Mask:** DM is an input mask signal for write data. Input data is masked when DM is sampled HIGH coincident with that input data during a Write access. DM is sampled on both edges of DQS. Although DM pins are input only, the DM loading matches the DQ and DQS loading. For x8 device, the function of DM or RDQS/$\overline{RDQS}$ is enabled by EMRS command.
BA0 - BA2	Input	**Bank Address Inputs:** BA0, BA1 and BA2 define to which bank an Active, Read, Write or Precharge command is being applied. Bank address also determines if the mode register or extended mode register is to be accessed during a MRS or EMRS cycle.
A0 - A13	Input	**Address Inputs:** Provided the row address for Active commands and the column address and Auto Precharge bit for Read/Write commands to select one location out of the memory array in the respective bank. A10 is sampled during a Precharge command to determine whether the Precharge applies to one bank (A10 LOW) or all banks (A10 HIGH). If only one bank is to be precharged, the bank is selected by BA0, BA1. The address inputs also provide the op-code during Mode Register Set commands.
DQ	Input/Output	**Data Input/ Output:** Bi-directional data bus.
DQS, ($\overline{DQS}$) (LDQS), ($\overline{LDQS}$) (UDQS), ($\overline{UDQS}$) (RDQS), ($\overline{RDQS}$)	Input/Output	**Data Strobe:** output with read data, input with write data. Edge-aligned with read data, centered in write data. For the x16, LDQS corresponds to the data on DQ0-DQ7; UDQS corresponds to the data on DQ8-DQ15. For the x8, an RDQS option using DM pin can be enabled via the EMRS(1) to simplify read timing. The data strobes DQS, LDQS, UDQS, and RDQS may be used in single ended mode or paired with optional complementary signals $\overline{DQS}$, $\overline{LDQS}$, $\overline{UDQS}$, and $\overline{RDQS}$ to provide differential pair signaling to the system during both reads and writes. An EMRS(1) control bit enables or disables all complementary data strobe signals. In this data sheet, "differential DQS signals" refers to any of the following with A10 = 0 of EMRS(1) x4 DQS/$\overline{DQS}$ x8 DQS/$\overline{DQS}$ if EMRS(1)[A11] = 0 x8 DQS/$\overline{DQS}$, RDQS/$\overline{RDQS}$, if EMRS(1)[A11] = 1 x16 LDQS/$\overline{LDQS}$ and UDQS/$\overline{UDQS}$ "single-ended DQS signals" refers to any of the following with A10 = 1 of EMRS(1) x4 DQS x8 DQS if EMRS(1)[A11] = 0 x8 DQS, RDQS, if EMRS(1)[A11] = 1 x16 LDQS and UDQS
NC		**No Connect:** No internal electrical connection is present.
V_{DD} / V_{DDQ}	Supply	**Power Supply:** 1.8V +/- 0.1V, **DQ Power Supply:** 1.8V +/- 0.1V
V_{SS} / V_{SSQ}	Supply	**Ground**, **DQ Ground**
V_{DDL}	Supply	**DLL Power Supply:** 1.8V +/- 0.1V
V_{SSDL}	Supply	**DLL Ground**
V_{REF}	Supply	**Reference voltage**

OMAP-L138 (MAIN : U8005)

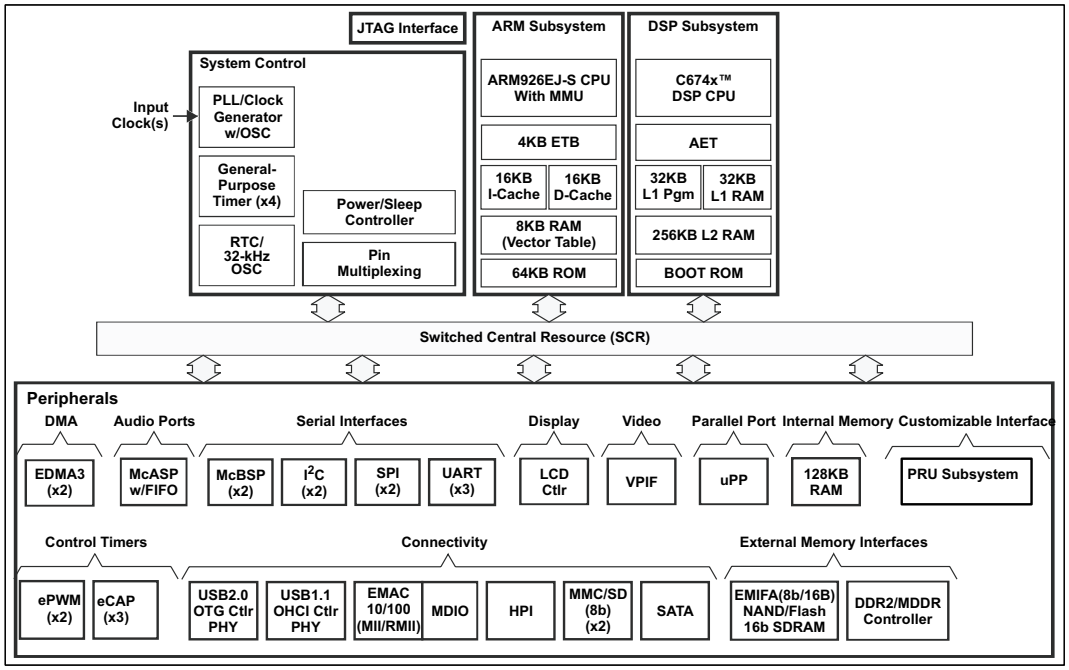

(1) Note: Not all peripherals are available at the same time due to multiplexing.

Pin Location Map

	1	2	3	4	5	6	7	8	9	10	
W	VP_DOUT[0]/ LCD_D[0]/ UPP_XD[8]/ GP7[8]/ PRU1_R31[8]	VP_DOUT[1]/ LCD_D[1]/ UPP_XD[9]/ GP7[9]/ PRU1_R31[9]	VP_DOUT[2]/ LCD_D[2]/ UPP_XD[10]/ GP7[10]/ PRU1_R31[10]	DDR_A[10]	DDR_A[6]	DDR_A[2]	DDR_CLKN	DDR_CLKP	DDR_RAS	DDR_D[15]	W
V	VP_DOUT[3]/ LCD_D[3]/ UPP_XD[11]/ GP7[11]/ PRU1_R31[11]	VP_DOUT[4]/ LCD_D[4]/ UPP_XD[12]/ GP7[12]/ PRU1_R31[12]	VP_DOUT[5]/ LCD_D[5]/ UPP_XD[13]/ GP7[13]/ PRU1_R31[13]	DDR_A[12]	DDR_A[5]	DDR_A[3]	DDR_CKE	DDR_BA[0]	DDR_CS	DDR_D[13]	V
U	VP_DOUT[6]/ LCD_D[6]/ UPP_XD[14]/ GP7[14]/ PRU1_R31[14]	VP_DOUT[7]/ LCD_D[7]/ UPP_XD[15]/ GP7[15]/ PRU1_R31[15]	VP_DOUT[8]/ LCD_D[8]/ UPP_XD[0]/ GP7[0]/ BOOT[0]	DDR_A[8]	DDR_A[4]	DDR_A[7]	DDR_A[0]	DDR_BA[2]	DDR_CAS	DDR_D[12]	U
T	VP_DOUT[9]/ LCD_D[9]/ UPP_XD[1]/ GP7[1]/ BOOT[1]	VP_DOUT[10]/ LCD_D[10]/ UPP_XD[2]/ GP7[2]/ BOOT[2]	VP_DOUT[11]/ LCD_D[11]/ UPP_XD[3]/ GP7[3]/ BOOT[3]	DDR_A[11]	DDR_A[13]	DDR_A[9]	DDR_A[1]	DDR_WE	DDR_BA[1]	DDR_D[10]	T
R	VP_DOUT[12]/ LCD_D[12]/ UPP_XD[4]/ GP7[4]/ BOOT[4]	VP_DOUT[13]/ LCD_D[13]/ UPP_XD[5]/ GP7[5]/ BOOT[5]	VP_DOUT[14]/ LCD_D[14]/ UPP_XD[6]/ GP7[6]/ BOOT[6]	DVDD3318_C	LCD_AC_ENB_CS/ GP6[0]/ PRU1_R31[28]	DDR_VREF	DDR_DVDD18	DDR_DVDD18	DDR_DVDD18	DDR_DQM[1]	R
P	SATA_VDD	SATA_VDD	SATA_VDDR	VP_DOUT[15]/ LCD_D[15]/ UPP_XD[7]/ GP7[7]/ BOOT[7]	DVDD3318_C	DVDD3318_C	DDR_DVDD18	DDR_DVDD18	DDR_DVDD18	DDR_DVDD18	P
N	SATA_REFCLKN	SATA_REFCLKP	SATA_REG	SATA_VDD	VSS	DDR_DVDD18	RVDD	CVDD	DDR_DVDD18	DDR_DVDD18	N
M	SATA_VSS	SATA_VDD	NC	VSS	VSS	VSS	VSS	CVDD	CVDD	VSS	M
L	SATA_RXP	SATA_RXN	SATA_VSS	DVDD3318_C	VSS	DVDD18	VSS	VSS	VSS	VSS	L
K	SATA_VSS	SATA_VSS	VP_CLKOUT2/ MMCSD1_DAT[2]/ PRU1_R30[2]/ GP8[3]/ PRU1_R31[3]	VP_CLKOUT3/ PRU1_R30[0]/ GP8[1]/ PRU1_R31[1]	DVDD18	CVDD	VSS	VSS	VSS	VSS	K
	1	2	3	4	5	6	7	8	9	10	

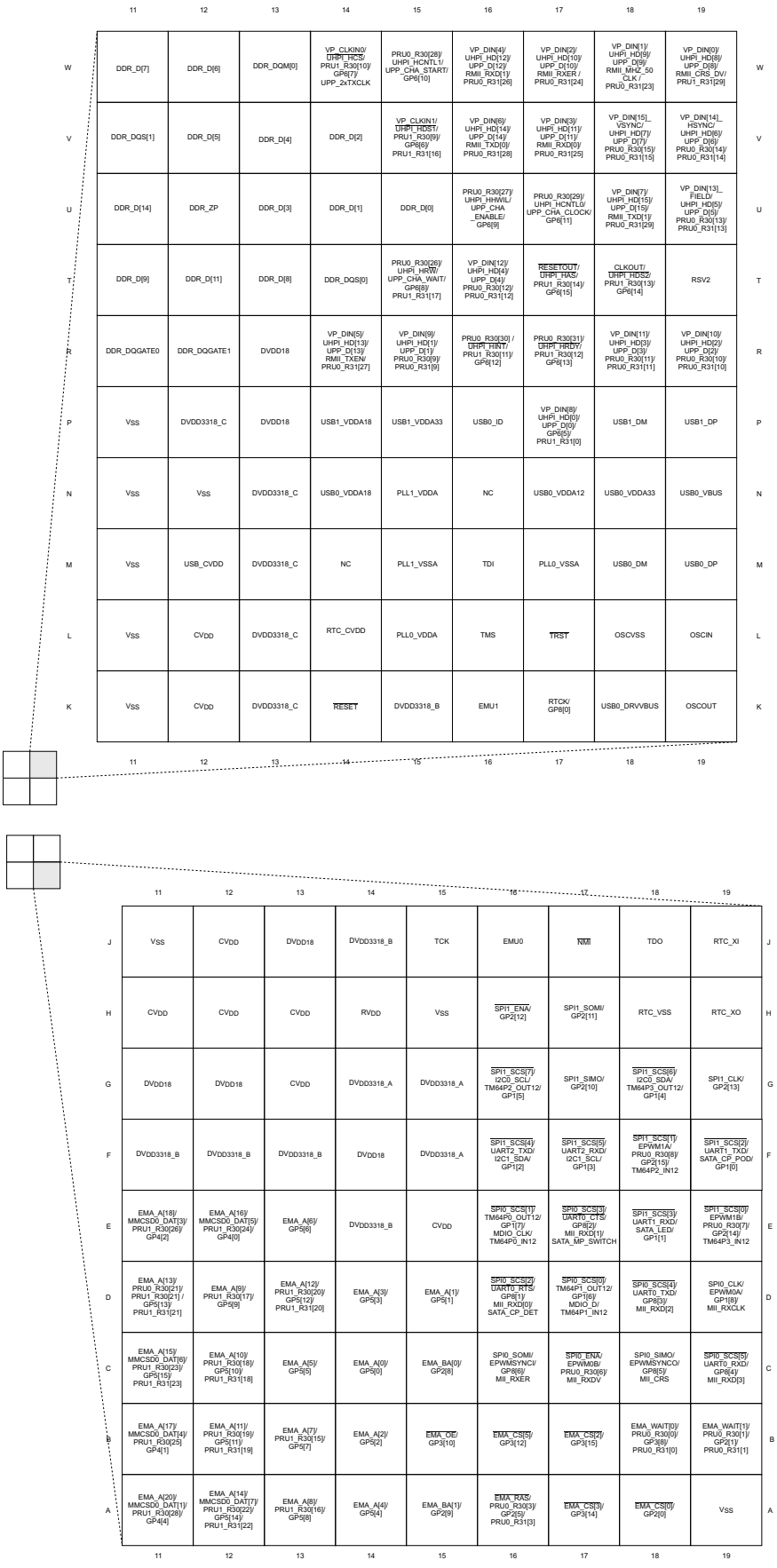

	11	12	13	14	15	16	17	18	19	
W	DDR_D[7]	DDR_D[6]	DDR_DQM[0]	VP_CLKIN0/ UHPI_HCS/ PRU1_R30[10]/ GP6[7]/ UPP_2xTXCLK	PRU0_R30[28]/ UHPI_HCNTL1/ UPP_CHA_START/ GP6[10]	VP_DIN[4]/ UHPI_HD[12]/ UPP_D[12]/ RMII_RX[1]/ PRU0_R31[26]	VP_DIN[2]/ UHPI_HD[10]/ UPP_D[10]/ RMII_RXER / PRU0_R31[24]	VP_DIN[1]/ UHPI_HD[9]/ UPP_D[9]/ RMII_MHZ_50 _CLK / PRU0_R31[23]	VP_DIN[0]/ UHPI_HD[8]/ UPP_D[8]/ RMII_CRS_DV/ PRU1_R31[29]	W
V	DDR_DQS[1]	DDR_D[5]	DDR_D[4]	DDR_D[2]	VP_CLKIN1/ UHPI_HDS1/ PRU1_R30[9]/ GP6[6]/ PRU1_R31[16]	VP_DIN[6]/ UHPI_HD[14]/ UPP_D[14]/ RMII_TXD[0]/ PRU0_R31[28]	VP_DIN[3]/ UHPI_HD[11]/ UPP_D[11]/ RMII_RXD[0]/ PRU0_R31[25]	VP_DIN[15]_ VSYNC/ UHPI_HD[7]/ UPP_D[7]/ PRU0_R30[15]/ PRU0_R31[15]	VP_DIN[14]_ HSYNC/ UHPI_HD[6]/ UPP_D[6]/ PRU0_R30[14]/ PRU0_R31[14]	V
U	DDR_D[14]	DDR_ZP	DDR_D[3]	DDR_D[1]	DDR_D[0]	PRU0_R30[27]/ UHPI_HHWIL/ UPP_CHA _ENABLE/ GP6[9]	PRU0_R30[29]/ UHPI_HCNTL0/ UPP_CHA_CLOCK/ GP6[11]	VP_DIN[7]/ UHPI_HD[15]/ UPP_D[15]/ RMII_TXD[1]/ PRU0_R31[29]	VP_DIN[13]_ FIELD/ UHPI_HD[5]/ UPP_D[5]/ PRU0_R30[13]/ PRU0_R31[13]	U
T	DDR_D[9]	DDR_D[11]	DDR_D[8]	DDR_DQS[0]	PRU0_R30[26]/ UHPI_HR/W/ UPP_CHA_WAIT/ GP6[8]/ PRU1_R31[17]	VP_DIN[12]/ UHPI_HD[4]/ UPP_D[4]/ PRU0_R30[12]/ PRU0_R31[12]	RESETOUT/ UHPI_HAS/ PRU1_R30[14]/ GP6[15]	CLKOUT/ UHPI_HDS2/ PRU1_R30[13]/ GP6[14]	RSV2	T
R	DDR_DQGATE0	DDR_DQGATE1	DVDD18	VP_DIN[5]/ UHPI_HD[13]/ UPP_D[13]/ RMII_TXEN/ PRU0_R31[27]	VP_DIN[9]/ UHPI_HD[1]/ UPP_D[1]/ PRU0_R30[9]/ PRU0_R31[9]	PRU0_R30[30] / UHPI_HINT/ PRU1_R30[11]/ GP6[12]	PRU0_R30[31]/ UHPI_HRDY/ PRU1_R30[12] GP6[13]	VP_DIN[11]/ UHPI_HD[3]/ UPP_D[3]/ PRU0_R30[11]/ PRU0_R31[11]	VP_DIN[10]/ UHPI_HD[2]/ UPP_D[2]/ PRU0_R30[10]/ PRU0_R31[10]	R
P	VSS	DVDD3318_C	DVDD18	USB1_VDDA18	USB1_VDDA33	USB0_ID	VP_DIN[8]/ UHPI_HD[0]/ UPP_D[0]/ GP6[5]/ PRU1_R31[0]	USB1_DM	USB1_DP	P
N	VSS	VSS	DVDD3318_C	USB0_VDDA18	PLL1_VDDA	NC	USB0_VDDA12	USB0_VDDA33	USB0_VBUS	N
M	VSS	USB_CVDD	DVDD3318_C	NC	PLL1_VSSA	TDI	PLL0_VSSA	USB0_DM	USB0_DP	M
L	VSS	CVDD	DVDD3318_C	RTC_CVDD	PLL0_VDDA	TMS	TRST	OSCVSS	OSCIN	L
K	VSS	CVDD	DVDD3318_C	RESET	DVDD3318_B	EMU1	RTCK/ GP8[0]	USB0_DRVVBUS	OSCOUT	K
	11	12	13	14	15	16	17	18	19	

	11	12	13	14	15	16	17	18	19	
J	VSS	CVDD	DVDD18	DVDD3318_B	TCK	EMU0	NMI	TDO	RTC_XI	J
H	CVDD	CVDD	CVDD	RVDD	VSS	SPI1_ENA/ GP2[12]	SPI1_SOMI/ GP2[11]	RTC_VSS	RTC_XO	H
G	DVDD18	DVDD18	CVDD	DVDD3318_A	DVDD3318_A	SPI1_SCS[7]/ I2C0_SCL/ TM64P2_OUT12/ GP1[5]	SPI1_SIMO/ GP2[10]	SPI1_SCS[6]/ I2C0_SDA/ TM64P3_OUT12/ GP1[4]	SPI1_CLK/ GP2[13]	G
F	DVDD3318_B	DVDD3318_B	DVDD3318_B	DVDD18	DVDD3318_A	SPI1_SCS[4]/ UART2_TXD/ I2C1_SDA/ GP1[2]	SPI1_SCS[5]/ UART2_RXD/ I2C1_SCL/ GP1[3]	SPI1_SCS[1]/ EPWM1A/ PRU0_R30[8]/ GP2[15]/ TM64P2_IN12	SPI1_SCS[2]/ UART1_TXD/ SATA_CP_POD/ GP1[0]	F
E	EMA_A[18]/ MMCSD0_DAT[3]/ PRU1_R30[26]/ GP4[2]	EMA_A[16]/ MMCSD0_DAT[5]/ PRU1_R30[24]/ GP4[0]	EMA_A[6]/ GP5[6]	DVDD3318_B	CVDD	SPI0_SCS[1]/ TM64P0_OUT12/ GP1[7]/ MDIO_CLK/ TM64P0_IN12	SPI0_SCS[3]/ UART0_CTS/ GP8[2]/ MII_RXD[1]/ SATA_MP_SWITCH	SPI1_SCS[3]/ UART1_RXD/ SATA_LED/ GP1[1]	SPI1_SCS[0]/ EPWM1B/ PRU0_R30[7]/ GP2[14]/ TM64P3_IN12	E
D	EMA_A[13]/ PRU0_R30[21]/ PRU1_R30[21] / GP5[13]/ PRU1_R31[21]	EMA_A[9]/ PRU1_R30[17]/ GP5[9]	EMA_A[12]/ PRU1_R30[20]/ GP5[12]/ PRU1_R31[20]	EMA_A[3]/ GP5[3]	EMA_A[1]/ GP5[1]	SPI0_SCS[2]/ UART0_RTS/ GP8[1]/ MII_RXD[0]/ SATA_CP_DET	SPI0_SCS[0]/ TM64P1_OUT12/ GP1[6]/ MDIO_D/ TM64P1_IN12	SPI0_SCS[4]/ UART0_TXD/ GP8[3]/ MII_RXD[2]	SPI0_CLK/ EPWM0A/ GP1[8]/ MII_RXCLK	D
C	EMA_A[15]/ MMCSD0_DAT[6]/ PRU1_R30[23]/ GP5[15]/ PRU1_R31[23]	EMA_A[10]/ PRU1_R30[18]/ GP5[10]/ PRU1_R31[18]	EMA_A[5]/ GP5[5]	EMA_A[0]/ GP5[0]	EMA_BA[0]/ GP2[8]	SPI0_SOMI/ EPWMSYNCI/ GP8[6]/ MII_RXER	SPI0_ENA/ EPWM0B/ PRU0_R30[6]/ MII_RXDV	SPI0_SIMO/ EPWMSYNCO/ GP8[5]/ MII_CRS	SPI0_SCS[5]/ UART0_RXD/ GP8[4]/ MII_RXD[3]	C
B	EMA_A[17]/ MMCSD0_DAT[4]/ PRU1_R30[25] GP4[1]	EMA_A[11]/ PRU1_R30[19]/ GP5[11]/ PRU1_R31[19]	EMA_A[7]/ PRU1_R30[15]/ GP5[7]	EMA_A[2]/ GP5[2]	EMA_OE/ GP3[10]	EMA_CS[5]/ GP3[12]	EMA_CS[2]/ GP3[15]	EMA_WAIT[0]/ PRU0_R30[0]/ GP3[8]/ PRU0_R31[0]	EMA_WAIT[1]/ PRU0_R30[1]/ GP2[1]/ PRU0_R31[1]	B
A	EMA_A[20]/ MMCSD0_DAT[1]/ PRU1_R30[28]/ GP4[4]	EMA_A[14]/ MMCSD0_DAT[7]/ PRU1_R30[22]/ GP5[14]/ PRU1_R31[22]	EMA_A[8]/ PRU1_R30[16]/ GP5[8]	EMA_A[4]/ GP5[4]	EMA_BA[1]/ GP2[9]	EMA_RAS/ PRU0_R30[3]/ GP2[5]/ PRU0_R31[3]	EMA_CS[3]/ GP3[14]	EMA_CS[0]/ GP2[0]	VSS	A
	11	12	13	14	15	16	17	18	19	

	1	2	3	4	5	6	7	8	9	10	
J	SATA_TXP	SATA_TXN	VP_CLKIN3/ MMCSD1_DAT[1]/ PRU1_R30[1]/ GP8[2]/ PRU1_R31[2]	PRU0_R30[23]/ MMCSD1_CMD/ UPP_CHB_ENABLE/ GP8[13]/ PRU1_R31[25]	DV_{DD3318_C}	CV_{DD}	V_{SS}	V_{SS}	V_{SS}	V_{SS}	J
H	SATA_VSS	SATA_VSS	VP_CLKIN2/ MMCSD1_DAT[3]/ PRU1_R30[3]/ GP8[4]/ PRU1_R31[4]	MMCSD1_DAT[5]/ LCD_HSYNC/ PRU1_R30[5]/ GP8[6]/ PRU1_R31[6]	DV_{DD3318_A}	CV_{DD}	CV_{DD}	V_{SS}	V_{SS}	CV_{DD}	H
G	PRU0_R30[25]/ MMCSD1_DAT[0]/ UPP_CHB_CLOCK/ GP8[15]/ PRU1_R31[27]	PRU0_R30[24]/ MMCSD1_CLK/ UPP_CHB_START/ GP8[14]/ PRU1_R31[26]	PRU0_R30[22]/ PRU1_R30[8]/ UPP_CHB_WAIT/ GP8[12]/ PRU1_R31[24]	MMCSD1_DAT[4]/ LCD_VSYNC/ PRU1_R30[4]/ GP8[8]/ PRU1_R31[5]	DV_{DD3318_A}	DV_{DD18}	CV_{DD}	CV_{DD}	DV_{DD3318_B}	DV_{DD18}	G
F	MMCSD1_DAT[7]/ LCD_PCLK/ PRU1_R30[7]/ GP8[11]	MMCSD1_DAT[6]/ LCD_MCLK/ PRU1_R30[6]/ GP8[10]/ PRU1_R31[7]	AXR0/ ECAP0_APWM0/ GP8[7]/ MII_TXD[0]/ CLKS0	RTC_ALARM/ UART2_CTS/ GP8[9]/ DEEPSLEEP	DV_{DD3318_A}	DV_{DD3318_B}	DV_{DD3318_B}	DV_{DD3318_B}	EMA_CS[4]/ GP3[13]	DV_{DD3318_B}	F
E	AXR1/ DX0/ GP1[9]/ MII_TXD[1]	AXR2/ DR0/ GP1[10]/ MII_TXD[2]	AXR3/ FSX0/ GP1[11]/ MII_TXD[3]	AXR8/ CLKS1/ ECAP1_APWM1/ GP0[0]/ PRU0_R31[8]	RVDD	EMA_D[15]/ GP3[7]	EMA_D[5]/ GP4[13]	EMA_D[3]/ GP4[11]	MMCSD0_CLK/ PRU1_R30[31]/ GP4[7]	EMA_D[8]/ GP3[0]	E
D	AXR4/ FSR0/ GP1[12]/ MII_COL	AXR7/ EPWM1TZ[0]/ PRU0_R30[17]/ GP1[15]/ PRU0_R31[7]	AXR5/ CLKX0/ GP1[13]/ MII_TXCLK	AXR10/ DR1/ GP0[2]	AMUTE/ PRU0_R30[16]/ UART2_RTS/ GP0[5]/ PRU0_R31[16]	EMA_D[11]/ GP3[3]	EMA_D[7]/ GP4[15]	EMA_SDCKE/ PRU0_R30[4]/ GP2[6]/ PRU0_R31[4]	EMA_D[9]/ GP3[1]	EMA_A_R/W/ GP3[9]	D
C	AXR6/ CLKR0/ GP1[14]/ MII_TXEN/ PRU0_R31[6]	AFSR/ GP0[13]/ PRU0_R31[20]	AXR9/ DX1/ GP0[1]	AXR12/ FSR1/ GP0[4]	AXR11/ FSX1/ GP0[3]	EMA_D[6]/ GP4[14]	EMA_D[14]/ GP3[6]	EMA_WEN_DQM[0]/ GP2[3]	EMA_D[0]/ GP4[8]	EMA_A[19]/ MMCSD0_DAT[2]/ PRU1_R30[27]/ GP4[3]	C
B	ACLKX/ PRU0_R30[19]/ GP0[14]/ PRU0_R31[21]	AFSX/ GP0[12]/ PRU0_R31[19]	AXR13/ CLKX1/ GP0[5]	AXR14/ CLKR1/ GP0[6]	EMA_D[4]/ GP4[12]	EMA_D[13]/ GP3[5]	EMA_CLK/ PRU0_R30[5]/ GP2[7]/ PRU0_R31[5]	EMA_D[2]/ GP4[10]	EMA_WE/ GP3[11]	EMA_A[21]/ MMCSD0_DAT[0]/ PRU1_R30[29]/ GP4[5]	B
A	ACLKR/ PRU0_R30[20]/ GP0[15]/ PRU0_R31[22]	AHCLKR/ PRU0_R30[18]/ UART1_RTS/ GP0[11]/ PRU0_R31[18]	AHCLKX/ USB_REFCLKIN/ UART1_CTS/ GP0[10]/ PRU0_R31[17]	EMA_WEN_DQM[1]/ ECAP2_APWM2/ GP0[7]	EMA_WEN_DQM[1]/ GP2[2]	EMA_D[12]/ GP3[4]	EMA_D[10]/ GP3[2]	EMA_D[1]/ GP4[9]	EMA_CAS/ PRU0_R30[2]/ GP2[4]/ PRU0_R31[2]	EMA_A[22]/ MMCSD0_CMD/ PRU1_R30[30]/ GP4[6]	A
	1	2	3	4	5	6	7	8	9	10	

ZWT (S–PBGA–N361) PLASTIC BALL GRID ARRAY

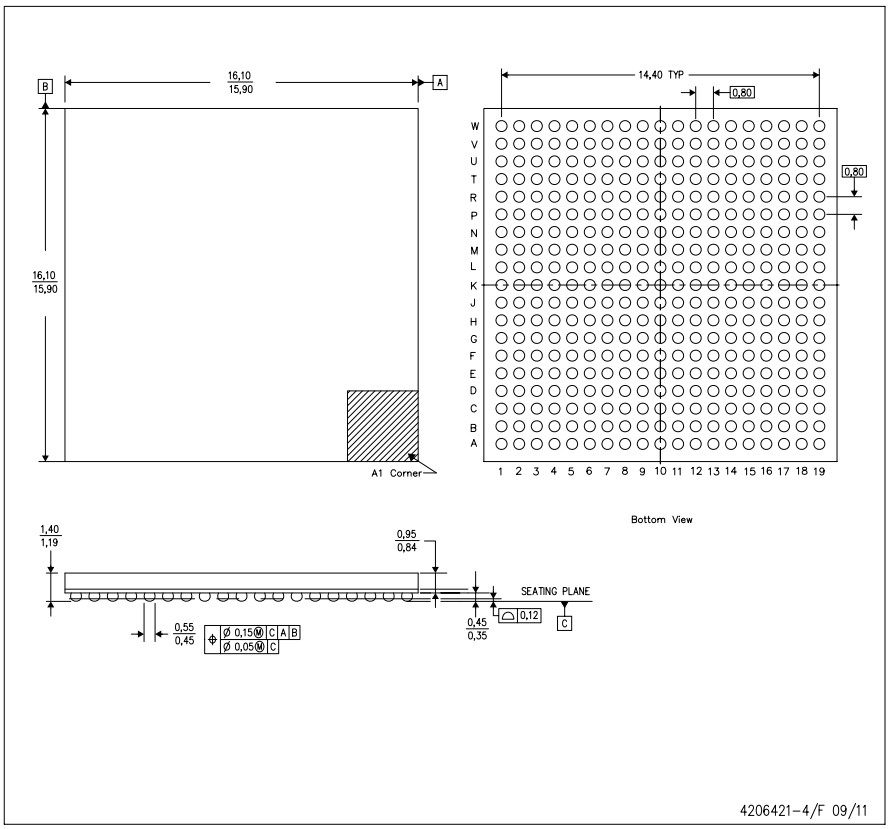

NOTES:
A. All linear dimensions are in millimeters. Dimensioning and tolerancing per ASME Y14.5M–1994.
B. This drawing is subject to change without notice.
C. This is a Pb–free solder ball design.
D. Falls within JEDEC MO–275.

Pin Function List

SIGNAL		Type	Pll	"Power Group"	Description
NAME	No.				
RESET	K14	I	IPU	IPU	Device reset input
NMI	J17	I	IPU	IPU	Non-Maskable Interrupt
TMS	L16	I	IPU	IPU	JTAG test mode select
TDI	M16	I	IPU	IPU	JTAG test data input
TDO	J18	O	IPU	IPU	JTAG test data output
TCK	J15	I	IPU	IPU	JTAG test clock
TRST	L17	I	IPD	IPD	JTAG test reset
EMU0	J16	I/O	IPU	IPU	Emulation pin
EMU1	K16	I/O	IPU	IPU	Emulation pin
OSCIN	L19	I	—	—	Oscillator input
OSCOUT	K19	O	—	—	Oscillator output
OSCVSS	L18	GND	—	—	Oscillator ground
PLL0_VDDA	L15	PWR	—	—	PLL analog VDD (1.2-V filtered supply)
PLL0_VSSA	M17	GND	—	—	PLL analog VSS (for filter)
PLL1_VDDA	N15	PWR	—	—	PLL analog VDD (1.2-V filtered supply)
PLL1_VSSA	M15	GND	—	—	PLL analog VSS (for filter)
RTC_XI	J19	I	—	—	RTC 32-kHz oscillator input
RTC_XO	H19	O	—	—	RTC 32-kHz oscillator output
RTC_CVDD	L14	PWR	—	—	RTC module core power (isolated from chip CVDD)
RTC_Vss	H18	GND	—	—	Oscillator ground
DDR_D[15]	W10	I/O	IPD	IPD	DDR2 SDRAM data bus
DDR_D[14]	U11	I/O	IPD	IPD	
DDR_D[13]	V10	I/O	IPD	IPD	
DDR_D[12]	U10	I/O	IPD	IPD	
DDR_D[11]	T12	I/O	IPD	IPD	
DDR_D[10]	T10	I/O	IPD	IPD	
DDR_D[9]	T11	I/O	IPD	IPD	
DDR_D[8]	T13	I/O	IPD	IPD	
DDR_D[7]	W11	I/O	IPD	IPD	
DDR_D[6]	W12	I/O	IPD	IPD	
DDR_D[5]	V12	I/O	IPD	IPD	
DDR_D[4]	V13	I/O	IPD	IPD	
DDR_D[3]	U13	I/O	IPD	IPD	
DDR_D[2]	V14	I/O	IPD	IPD	
DDR_D[1]	U14	I/O	IPD	IPD	
DDR_D[0]	U15	I/O	IPD	IPD	
DDR_A[13]	T5	O	IPD	IPD	DDR2 row/column address
DDR_A[12]	V4	O	IPD	IPD	
DDR_A[11]	T4	O	IPD	IPD	
DDR_A[10]	W4	O	IPD	IPD	
DDR_A[9]	T6	O	IPD	IPD	
DDR_A[8]	U4	O	IPD	IPD	
DDR_A[7]	U6	O	IPD	IPD	
DDR_A[6]	W5	O	IPD	IPD	
DDR_A[5]	V5	O	IPD	IPD	
DDR_A[4]	U5	O	IPD	IPD	
DDR_A[3]	V6	O	IPD	IPD	
DDR_A[2]	W6	O	IPD	IPD	
DDR_A[1]	T7	O	IPD	IPD	
DDR_A[0]	U7	O	IPD	IPD	
DDR_CLKP	W8	O	IPD	IPD	DDR2 clock (positive)
DDR_CLKN	W7	O	IPD	IPD	DDR2 clock (negative)
DDR_CKE	V7	O	IPD	IPD	DDR2 clock enable
DDR_WE	T8	O	IPD	IPD	DDR2 write enable
DDR_RAS	W9	O	IPD	IPD	DDR2 row address strobe
DDR_CAS	U9	O	IPD	IPD	DDR2 column address strobe
DDR_CS	V9	O	IPD	IPD	DDR2 chip select
DDR_DQM[0]	W13	O	IPD	IPD	DDR2 data mask outputs
DDR_DQM[1]	R10	O	IPD	IPD	
DDR_DQS[0]	T14	I/O	IPD	IPD	DDR2 data strobe inputs/outputs
DDR_DQS[1]	V11	I/O	IPD	IPD	
DDR_BA[2]	U8	O	IPD	IPD	DDR2 SDRAM bank address
DDR_BA[1]	T9	O	IPD	IPD	
DDR_BA[0]	V8	O	IPD	IPD	
DDR_DQGATE0	R11	O	IPD	IPD	"DDR2 loopback signal for external DQS gating. Route to DDR and back to DDR_DQGATE1 with same constraints as used for DDR clock and data."
DDR_DQGATE1	R12	I	IPD	IPD	"DDR2 loopback signal for external DQS gating. Route to DDR and back to DDR_DQGATE0 with same constraints as used for DDR clock and data. "

SIGNAL		Type	Pll	"Power Group"	Description
NAME	No.				
DDR_ZP	U12	O	—	—	"DDR2 reference output for drive strength calibration of N and P channel outputs. Tie to ground via 50 ohm resistor @ 5% tolerance. "
DDR_VREF	R6	I	—	—	"DDR voltage input for the DDR2/mDDR I/O buffers. Note even in the case of mDDR an external resistor divider connected to this pin is necessary. "
DDR_DVDD18	N6,N9,N10,P7,P8, P9,P10,R7,R8,R9	PWR	—	—	DDR PHY 1.8V power supply pins
VP_DIN[15]_VSYNC / UHPI_HD[7] / UPP_D[7] / PRU0_R30[15] / PRU0_ R31[15]	V18	I/O	CP[27]	CP[27]	
VP_DIN[14]_HSYNC / UHPI_HD[6] / UPP_D[6] / PRU0_R30[14] / PRU0_ R31[14]	V19	I/O	CP[27]	CP[27]	
VP_DIN[13]_FIELD / UHPI_HD[5] / UPP_ D[5] / PRU0_R30[13] / PRU0_R31[13]	U19	I/O	CP[27]	CP[27]	
VP_DIN[12] / UHPI_HD[4] / UPP_D[4] / PRU0_R30[12] / PRU0_R31[12]	T16	I/O	CP[27]	CP[27]	
VP_DIN[11] / UHPI_HD[3] / UPP_D[3] / PRU0_R30[11] / PRU0_R31[11]	R18	I/O	CP[27]	CP[27]	
VP_DIN[10] / UHPI_HD[2] / UPP_D[2] / PRU0_R30[10] / PRU0_R31[10]	R19	I/O	CP[27]	CP[27]	
VP_DIN[9] / UHPI_HD[1] / UPP_D[1] / PRU0_R30[9] / PRU0_R31[9]	R15	I/O	CP[27]	CP[27]	
VP_DIN[7] / UHPI_HD[15] / UPP_D[15] / RMII_TXD[1] / PRU0_R31[29]	U18	I/O	CP[26]	CP[26]	
VP_DIN[6] / UHPI_HD[14] / UPP_D[14] / RMII_TXD[0] / PRU0_R31[28]	V16	I/O	CP[26]	CP[26]	
VP_DIN[5] / UHPI_HD[13] / UPP_D[13] / RMII_TXEN / PRU0_R31[27]	R14	I/O	CP[26]	CP[26]	
VP_DIN[4] / UHPI_HD[11] / UPP_D[12] / RMII_RXD[1] / PRU0_R31[26]	W16	I/O	CP[26]	CP[26]	
VP_DIN[3] / UHPI_HD[11] / UPP_D[11] / RMII_RXD[0] / PRU0_R31[25]	V17	I/O	CP[26]	CP[26]	
VP_DIN[2] / UHPI_HD[10] / UPP_D[10] / RMII_RXER / PRU0_R31[24]	W17	I/O	CP[26]	CP[26]	
VP_DIN[1] / UHPI_HD[9] / UPP_D[9] / RMII_MHZ_50_CLK / PRU0_R31[23]	W18	I/O	CP[26]	CP[26]	
VP_DIN[0] / UHPI_HD[8] / UPP_D[8] / RMII_CRS_DV / PRU1_R31[29]	W19	I/O	CP[26]	CP[26]	
USB0_DM	M18	A	IPD	IPD	USB0 PHY data minus
USB0_DP	M19	A	IPD	IPD	USB0 PHY data plus
USB0_VDDA33	N18	PWR	—	—	USB0 PHY 3.3-V supply
USB0_ID	P16	A	—	—	USB0 PHY identification (mini-A or mini-B plug)
USB0_VBUS	N19	A	—	—	USB0 bus voltage
USB0_DRVVBUS	K18	0	IPD	IPD	USB0 controller VBUS control output.
USB0_VDDA18	N14	PWR	—	—	USB0 PHY 1.8-V supply input
USB0_VDDA12	N17	A	—	—	USB0 PHY 1.2-V LDO output for bypass cap
USB1_DM I	P18	A	—	—	USB1 PHY data minus
USB1_DP	P19	A	—	—	USB1 PHY data plus
USB1_VDDA33	P15	PWR	—	—	USB1 PHY 3.3-V supply
USB1_VDDA18	P14	PWR	—	—	USB1 PHY 1.8-V supply
SPI0_ENA / EPWM0B / PRU0_R30[6] / MII_RXDV	C17	I	CP[7]	CP[7]	EMAC MII receive data valid input
SATA_RXP	L1	I	—	—	SATA receive data (positive)
SATA_RXN	L2	I	—	—	SATA receive data (negative)
SATA_TXP	J1	O	—	—	SATA transmit data (positive)
SATA_TXN	J2	O	—	—	SATA transmit data (negative)
SATA_REFCLKP	N2	I	—	—	SATA PHY reference clock (positive)
SATA_REFCLKN	N1	I	—	—	SATA PHY reference clock (negative)
SATA_REG	N3	A	—	—	SATA PHY PLL regulator output. Requires an external 0.1uF filter capacitor.
SATA_VDDR	P3	PWR	—	—	SATA PHY 1.8V internal regulator supply
SATA_VDD	M2,P1,P2,N4	PWR	—	—	SATA PHY 1.2V logic supply
SATA_VSS	H1,H2,K1,K2,L3,M1	GND	—	—	SATA PHY ground reference
VP_DIN[15]_VSYNC / UHPI_HD[7] / UPP_D[7]/PRU0_R30[15] / PRU0_ R31[15]	V18	I/O	CP[27]	CP[27]	
VP_DIN[14]_HSYNC / UHPI_HD[6] / UPP_D[6]/ PRU0_R30[14] / PRU0_ R31[14]	V19	I/O	CP[27]	CP[27]	
VP_DIN[13]_FIELD / UHPI_HD[5] / UPP_ D[5] /PRU0_R30[13] / PRU0_R31[13]	U19	I/O	CP[27]	CP[27]	
VP_DIN[12] / UHPI_HD[4] / UPP_D[4]/ PRU0_R30[12] / PRU0_R31[12]	T16	I/O	CP[27]	CP[27]	

SIGNAL		Type	PII	"Power Group"	Description
NAME	No.				
VP_DIN[11] / UHPI_HD[3] / UPP_D[3]/ PRU0_R30[11] / PRU0_R31[11]	R18	I/O	CP[27]	CP[27]	
VP_DIN[10] / UHPI_HD[2] / UPP_D[2]/ PRU0_R30[10] / PRU0_R31[10]	R19	I/O	CP[27]	CP[27]	
VP_DIN[9] / UHPI_HD[1] / UPP_D[1]/ PRU0_R30[9] / PRU0_R31[9]	R15	I/O	CP[27]	CP[27]	
VP_DIN[14]_HSYNC / UHPI_HD[6] / UPP_D[6] / RU0_R30[14] / PRU0_ R31[14]	V19	I	CP[27]	CP[27]	
VP_DIN[3] / UHPI_HD[11] / UPP_D[11] / MII_RXD[0] / PRU0_R31[25]	V17	I	CP[26]	CP[26]	
ACLKR / PRU0_R30[20] / GP0[15] / PRU0_R31[22]	A1	I/O	CP[0]	CP[0]	
ACLKX / PRU0_R30[19] / GP0[14] / PRU0_R31[21]	B1	I/O	CP[0]	CP[0]	
AFSR / GP0[13] / PRU0_R31[20]	C2	I/O	CP[0]	CP[0]	
AFSX / GP0[12] / PRU0_R31[19]	B2	I/O	CP[0]	CP[0]	
AHCLKR / PRU0_R30[18] / UART1_RTS / GP0[11] / PRU0_R31[18]	A2	I/O	CP[0]	CP[0]	
AHCLKX / USB_REFCLKIN / UART1_ CTS / GP0[10] / PRU0_R31[17]	A3	I/O	CP[0]	CP[0]	
AMUTE / PRU0_R30[16] / UART2_RTS / GP0[9] / PRU0_R31[16]	D5	I/O	CP[0]	CP[0]	GPIO Bank 0
RTC_ALARM / UART2_CTS / GP0[8] / DEEPSLEEP	F4	I/O	CP[0]	CP[0]	
AXR15 / EPWM0TZ[0] / ECAP2_APWM2 / GP0[7]	A4	I/O	CP[1]	CP[1]	
AXR14 / CLKR1 / GP0[6]	B4	I/O	CP[2]	CP[2]	
AXR13 / CLKX1 / GP0[5]	B3	I/O	CP[2]	CP[2]	
AXR12 / FSR1 / GP0[4]	C4	I/O	CP[2]	CP[2]	
AXR11 / FSX1 / GP0[3]	C5	I/O	CP[2]	CP[2]	
AXR10 / DR1 / GP0[2]	D4	I/O	CP[2]	CP[2]	
AXR9 / DX1 / GP0[1]	C3	I/O	CP[2]	CP[2]	
AXR8 / CLKS1 / ECAP1_APWM1 /GP0[0] / PRU0_R31[8]	E4	I/O	CP[3]	CP[3]	
AXR7 / EPWM1TZ[0] / PRU0_R30[17] / GP1[15] / PRU0_R31[7]	D2	I/O	CP[4]	CP[4]	
AXR6 / CLKR0 / GP1[14] / MII_TXEN / PRU0_R31[6]	C1	I/O	CP[5]	CP[5]	
AXR5 / CLKX0 / GP1[13] / MII_TXCLK	D3	I/O	CP[5]	CP[5]	
AXR4 / FSR0 / GP1[12] / MII_COL	D1	I/O	CP[5]	CP[5]	
AXR3 / FSX0 / GP1[11] / MII_TXD[3]	E3	I/O	CP[5]	CP[5]	
AXR2 / DR0 / GP1[10] / MII_TXD[2]	E2	I/O	CP[5]	CP[5]	
AXR1 / DX0 / GP1[9] / MII_TXD[1]	E1	I/O	CP[5]	CP[5]	
SPI0_CLK / EPWM0A / GP1[8] / MII_ RXCLK	D19	I/O	CP[7]	CP[7]	
SPI0_SCS[1] / TM64P0_OUT12 / GP1[7] / MDIO_CLK / TM64P0_IN12	E16	I/O	CP[10]	CP[10]	GPIO Bank 1
SPI0_SCS[0] / TM64P1_OUT12 / GP1[6] / MDIO_D / TM64P1_IN12	D17	I/O	CP[10]	CP[10]	
SPI1_SCS[7] / I2C0_SCL / TM64P2_ OUT12 / GP1[5]	G16	I/O	CP[11]	CP[11]	
SPI1_SCS[6] / I2C0_SDA / TM64P3_ OUT12 / GP1[4]	G18	I/O	CP[11]	CP[11]	
SPI1_SCS[5] / UART2_RXD / I2C1_SCL / GP1[3]	F17	I/O	CP[12]	CP[12]	
SPI1_SCS[4] / UART2_TXD / I2C1_SDA / GP1[2]	F16	I/O	CP[12]	CP[12]	
SPI1_SCS[3] / UART1_RXD / SATA_LED / GP1[1]	E18	I/O	CP[13]	CP[13]	
SPI1_SCS[2] / UART1_TXD / SATA_CP_ POD / GP1[0]	F19	I/O	CP[13]	CP[13]	
SPI1_SCS[1] / EPWM1A / PRU0_R30[8] / GP2[15] / TM64P2_IN12	F18	I/O	CP[14]	CP[14]	
SPI1_SCS[0] / EPWM1B / PRU0_R30[7] / GP2[14] / TM64P3_IN12	E19	I/O	CP[14]	CP[14]	
SPI1_CLK / GP2[13]	G19	I/O	CP[15]	CP[15]	
SPI1_ENA / GP2[12]	H16	I/O	CP[15]	CP[15]	GPIO Bank 2
SPI1_SOMI / GP2[11]	H17	I/O	CP[15]	CP[15]	
SPI1_SIMO / GP2[10]	G17	I/O	CP[15]	CP[15]	
EMA_BA[1] / GP2[9]	A15	I/O	CP[16]	CP[16]	
EMA_BA[0] / GP2[8]	C15	I/O	CP[16]	CP[16]	
EMA_CLK / PRU0_R30[5] / GP2[7] / PRU0_R31[5]	B7	I/O	CP[16]	CP[16]	

SIGNAL		Type	PII	"Power Group"	Description
NAME	No.				
EMA_SDCKE / PRU0_R30[4] / GP2[6] / PRU0_R31[4]	D8	I/O	CP[16]	CP[16]	
EMA_RAS / PRU0_R30[3] / GP2[5] / PRU0_R31[3]	A16	I/O	CP[16]	CP[16]	
EMA_CAS / PRU0_R30[2] / GP2[4] / PRU0_R31[2]	A9	I/O	CP[16]	CP[16]	
EMA_WEN_DQM[0] / GP2[3]	C8	I/O	CP[16]	CP[16]	
EMA_WEN_DQM[1] / GP2[2]	A5	I/O	CP[16]	CP[16]	
EMA_WAIT[1] / PRU0_R30[1] / GP2[1] / PRU0_R31[1]	B19	I/O	CP[16]	CP[16]	
EMA_CS[0] / GP2[0]	A18	I/O	CP[16]	CP[16]	
EMA_CS[2] / GP3[15]	B17	I/O	CP[16]	CP[16]	
EMA_CS[3] / GP3[14]	A17	I/O	CP[16]	CP[16]	
EMA_CS[4] / GP3[13]	F9	I/O	CP[16]	CP[16]	
EMA_CS[5] / GP3[12]	B16	I/O	CP[16]	CP[16]	
EMA_WE / GP3[11]	B9	I/O	CP[16]	CP[16]	
EMA_OE / GP3[10]	B15	I/O	CP[16]	CP[16]	
EMA_A_RW / GP3[9]	D10	I/O	CP[16]	CP[16]	GPIO Bank 3
EMA_WAIT[0] / PRU0_R30[0] / GP3[8] / PRU0_R31[0]	B18	I/O	CP[16]	CP[16]	
EMA_D[15] / GP3[7]	E6	I/O	CP[17]	CP[17]	
EMA_D[14] / GP3[6]	C7	I/O	CP[17]	CP[17]	
EMA_D[13] / GP3[5]	B6	I/O	CP[17]	CP[17]	
EMA_D[12] / GP3[4]	A6	I/O	CP[17]	CP[17]	
EMA_D[11] / GP3[3]	D6	I/O	CP[17]	CP[17]	
EMA_D[10] / GP3[2]	A7	I/O	CP[17]	CP[17]	
EMA_D[9] / GP3[1]	D9	I/O	CP[17]	CP[17]	
EMA_D[8] / GP3[0]	E10	I/O	CP[17]	CP[17]	
EMA_D[7] / GP4[15]	D7	I/O	CP[17]	CP[17]	GPIO Bank 4
EMA_D[6] / GP4[14]	C6	I/O	CP[17]	CP[17]	
EMA_D[5] / GP4[13]	E7	I/O	CP[17]	CP[17]	
EMA_D[4] / GP4[12]	B5	I/O	CP[17]	CP[17]	
EMA_D[3] / GP4[11]	E8	I/O	CP[17]	CP[17]	
EMA_D[2] / GP4[10]	B8	I/O	CP[17]	CP[17]	
EMA_D[1] / GP4[9]	A8	I/O	CP[17]	CP[17]	
EMA_D[0] / GP4[8]	C9	I/O	CP[17]	CP[17]	
MMCSD0_CLK / PRU1_R30[31] / GP4[7]	E9	I/O	CP[18]	CP[18]	
EMA_A[22] / MMCSD0_CMD / PRU1_R30[30] / GP4[6]	A10	I/O	CP[18]	CP[18]	
EMA_A[21] / MMCSD0_DAT[0] / PRU1_R30[29] / GP4[5]	B10	I/O	CP[18]	CP[18]	
EMA_A[20] / MMCSD0_DAT[1] / PRU1_R30[28] / GP4[4]	A11	I/O	CP[18]	CP[18]	
EMA_A[19] / MMCSD0_DAT[2] / PRU1_R30[27] / GP4[3]	C10	I/O	CP[18]	CP[18]	
EMA_A[18] / MMCSD0_DAT[3] / PRU1_R30[26] / GP4[2]	E11	I/O	CP[18]	CP[18]	
EMA_A[17] / MMCSD0_DAT[4] / PRU1_R30[25] / GP4[1]	B11	I/O	CP[18]	CP[18]	
EMA_A[16] / MMCSD0_DAT[5] / PRU1_R30[24] / GP4[0]	E12	I/O	CP[18]	CP[18]	
EMA_A[15] / MMCSD0_DAT[6] / PRU1_R30[23] / GP5[15] / PRU1_R31[23]	C11	I/O	CP[19]	CP[19]	GPIO Bank 5
EMA_A[14] / MMCSD0_DAT[7] / PRU1_R30[22] / GP5[14] / PRU1_R31[22]	A12	I/O	CP[19]	CP[19]	
EMA_A[13] / PRU0_R30[21] / PRU1_R30[21] / GP5[13] / PRU1_R31[21]	D11	I/O	CP[19]	CP[19]	
EMA_A[12] / PRU1_R30[20] / GP5[12] / PRU1_R31[20]	D13	I/O	CP[19]	CP[19]	
EMA_A[11] / PRU1_R30[19] / GP5[11] / PRU1_R31[19]	B12	I/O	CP[19]	CP[19]	
EMA_A[10] / PRU1_R30[18] / GP5[10] / PRU1_R31[18]	C12	I/O	CP[19]	CP[19]	
EMA_A[9] / PRU1_R30[17] / GP5[9]	D12	I/O	CP[19]	CP[19]	
EMA_A[8] / PRU1_R30[16] / GP5[8]	A13	I/O	CP[19]	CP[19]	
EMA_A[7] / PRU1_R30[15] / GP5[7]	B13	I/O	CP[20]	CP[20]	
EMA_A[6] / GP5[6]	E13	I/O	CP[20]	CP[20]	
EMA_A[5] / GP5[5]	C13	I/O	CP[20]	CP[20]	
EMA_A[4] / GP5[4]	A14	I/O	CP[20]	CP[20]	
EMA_A[3] / GP5[3]	D14	I/O	CP[20]	CP[20]	
EMA_A[2] / GP5[2]	B14	I/O	CP[20]	CP[20]	
EMA_A[1] / GP5[1]	D15	I/O	CP[20]	CP[20]	
EMA_A[0] / GP5[0]	C14	I/O	CP[20]	CP[20]	

SIGNAL		Type	PII	"Power Group"	Description
NAME	No.				
RESETOUT / UHPI_HAS / PRU1_ R30[14] / GP6[15]	T17	I/O	CP[21]	CP[21]	
CLKOUT / UHPI_HDS2 / PRU1_R30[13] / GP6[14]	T18	I/O	CP[22]	CP[22]	
PRU0_R30[31] / UHPI_HRDY / PRU1_ R30[12] / GP6[13]	R17	I/O	CP[23]	CP[23]	
PRU0_R30[30] / UHPI_HINT / PRU1_ R30[11] / GP6[12]	R16	I/O	CP[23]	CP[23]	
PRU0_R30[29] / UHPI_HCNTL0 / UPP_ CHA_CLOCK / GP6[11]	U17	I/O	CP[24]	CP[24]	
PRU0_R30[28] / UHPI_HCNTL1 / UPP_ CHA_START / GP6[10]	W15	I/O	CP[24]	CP[24]	
PRU0_R30[27] / UHPI_HHWIL / UPP_ CHA_ENABLE / GP6[9]	U16	I/O	CP[24]	CP[24]	
PRU0_R30[26] / UHPI_HRW / UPP_ CHA_WAIT/GP6[8] / PRU1_R31[17]	T15	I/O	CP[24]	CP[24]	
VP_CLKIN0 / UHPI_HCS / PRU1_ R30[10] GP6[7] / UPP_2xTXCLK	W14	I/O	CP[25]	CP[25]	GPIO Bank 6
VP_CLKIN1 / UHPI_HDS1 / PRU1_ R30[9] / GP6[6] / PRU1_R31[16]	V15	I/O	CP[25]	CP[25]	
VP_DIN[8] / UHPI_HD[0] / UPP_D[0] / GP6[5] / PRU1_R31[0]	P17	I/O	CP[27]	CP[27]	
VP_CLKIN2 / MMCSD1_DAT[3] / PRU1_ R30[3] / GP6[4] / PRU1_R31[4]	H3	I/O	CP[30]	CP[30]	
VP_CLKOUT2 / MMCSD1_DAT[2] / PRU1_R30[2] / GP6[3] / PRU1_R31[3]	K3	I/O	CP[30]	CP[30]	
VP_CLKIN3 / MMCSD1_DAT[1] / PRU1_ R30[1] / GP6[2] / PRU1_R31[2]	J3	I/O	CP[30]	CP[30]	
VP_CLKOUT3 / PRU1_R30[0] / GP6[1] / PRU1_R31[1]	K4	I/O	CP[30]	CP[30]	
LCD_AC_ENB_CS / GP6[0] / PRU1_ R31[28]	R5	I/O	CP[31]	CP[31]	
VP_DOUT[7] / LCD_D[7] / UPP_XD[15] / GP7[15] / PRU1_R31[15]	U2	I/O	CP[28]	CP[28]	GPIO Bank 7
VP_DOUT[6] / LCD_D[6] / UPP_XD[14] / GP7[14] / PRU1_R31[14]	U1	I/O	CP[28]	CP[28]	
VP_DOUT[5] / LCD_D[5] / UPP_XD[13] / GP7[13] / PRU1_R31[13]	V3	I/O	CP[28]	CP[28]	
VP_DOUT[4] / LCD_D[4] / UPP_XD[12] / GP7[12] / PRU1_R31[12]	V2	I/O	CP[28]	CP[28]	
VP_DOUT[3] / LCD_D[3] / UPP_XD[11] / GP7[11] / PRU1_R31[11]	V1	I/O	CP[28]	CP[28]	
VP_DOUT[2] / LCD_D[2] / UPP_XD[10] / GP7[10] / PRU1_R31[10]	W3	I/O	CP[28]	CP[28]	
VP_DOUT[1] / LCD_D[1] / UPP_XD[9] / GP7[9] / PRU1_R31[9]	W2	I/O	CP[28]	CP[28]	
VP_DOUT[0] / LCD_D[0] / UPP_XD[8] / GP7[8] / PRU1_R31[8]	W1	I/O	CP[28]	CP[28]	
VP_DOUT[15] / LCD_D[15] / UPP_XD[7] / GP7[7] / BOOT[7]	P4	I/O	CP[29]	CP[29]	
VP_DOUT[14] / LCD_D[14] / UPP_XD[6] / GP7[6] / BOOT[6]	R3	I/O	CP[29]	CP[29]	
VP_DOUT[13] / LCD_D[13] / UPP_XD[5] / GP7[5]/ BOOT[5]	R2	I/O	CP[29]	CP[29]	
VP_DOUT[12] / LCD_D[12] / UPP_XD[4] / GP7[4] / BOOT[4]	R1	I/O	CP[29]	CP[29]	
VP_DOUT[11] / LCD_D[11] / UPP_XD[3] / GP7[3] / BOOT[3]	T3	I/O	CP[29]	CP[29]	
VP_DOUT[10] / LCD_D[10] / UPP_XD[2] / GP7[2] / BOOT[2]	T2	I/O	CP[29]	CP[29]	
VP_DOUT[9] / LCD_D[9] / UPP_XD[1] / GP7[1] / BOOT[1]	T1	I/O	CP[29]	CP[29]	
VP_DOUT[8] / LCD_D[8] / UPP_XD[0] / GP7[0] / BOOT[0]	U3	I/O	CP[29]	CP[29]	
PRU0_R30[25] / MMCSD1_DAT[0] / UPP_CHB_CLOCK / GP8[15] / PRU1_ R31[27]	G1	I/O	CP30]	CP30]	GPIO Bank 8
PRU0_R30[24] / MMCSD1_CLK / UPP_ CHB_START / GP8[14] / PRU1_R31[26]	G2	I/O	CP[30]	CP[30]	
PRU0_R30[23] / MMCSD1_CMD / UPP_ CHB_ENABLE / GP8[13] / PRU1_R31[25]	J4	I/O	CP[30]	CP[30]	
PRU0_R30[22] / PRU1_R30[8] / UPP_ CHB_WAIT / GP8[12] / PRU1_R31[24]	G3	I/O	CP[30]	CP[30]	
MMCSD1_DAT[7] / LCD_PCLK / PRU1_ R30[7] / GP8[11]	F1	I/O	CP[31]	CP[31]	

SIGNAL		Type	PII	"Power Group"	Description
NAME	No.				
MMCSD1_DAT[6] / LCD_MCLK / PRU1_R30[6] / GP8[10] / PRU1_R31[7]	F2	I/O	CP[31]	CP[31]	
MMCSD1_DAT[5] / LCD_HSYNC / PRU1_R30[5] / GP8[9] / PRU1_R31[6]	H4	I/O	CP[31]	CP[31]	
MMCSD1_DAT[4] / LCD_VSYNC / PRU1_R30[4] / GP8[8] / PRU1_R31[5]	G4	I/O	CP[31]	CP[31]	
AXR0 / ECAP0_APWM0 / GP8[7] / MII_TXD[0] / CLKS0	F3	I/O	CP[6]	CP[6]	
SPI0_SOMI / EPWMSYNCI / GP8[6] / MII_RXER	C16	I/O	CP[7]	CP[7]	
SPI0_SIMO / EPWMSYNCO / GP8[5] / MII_CRS	C18	I/O	CP[7]	CP[7]	
SPI0_SCS[5] / UART0_RXD / GP8[4] / MII_RXD[3]	C19	I/O	CP[8]	CP[8]	
SPI0_SCS[4] / UART0_TXD / GP8[3] / MII_RXD[2]	D18	I/O	CP[8]	CP[8]	
SPI0_SCS[3] / UART0_CTS / GP8[2] / MII_RXD[1] / SATA_MP_SWITCH	E17	I/O	CP[9]	CP[9]	
SPI0_SCS[2] / UART0_RTS / GP8[1] / MII_RXD[0] / SATA_CP_DET	D16	I/O	CP[9]	CP[9]	
RTCK / GP8[0](1)	K17	I/O	IPD	IPD	
RSV2	T19	PWR			"Reserved. For proper device operation, this pin must be tied either directly to CVDD or left unconnected (do not connect to ground)."
NC	M3,M14,N16				"Pin M3 should be left unconnected (do not connect to power or ground) Pins M14 and N16 may be left unconnected or connected to ground (VSS)"
CVDD (Core supply)	E15,G7,G8,G13,H6,H7,H10,H11,H12,H13,J6,J12,K6,K12,L12,M8,M9,N8	PWR			Variable (1.3V -1.0V) core supply voltage pins
RVDD (Internal RAM supply)	E5,H14,N7	PWR			"1.3V internal ram supply voltage pins (for 456 MHz versions) 1.2V internal ram supply voltage pins (for 375 MHz versions)"
DVDD18 (I/O supply)	F14,G6,G10,G11,G12,J13,K5,L6,P13,R13	PWR			"1.8V I/O supply voltage pins. DVDD18 must be powered even if all of the DVDD3318_x supplies are operated at 3.3V."
DVDD3318_A (I/O supply)	F5,F15,G5,G14,G15,H5	PWR			1.8V or 3.3-V dual-voltage LVCMOS I/O supply voltage pins, Group A
DVDD3318_B (I/O supply)	E14,F6,F7,F8,F10,F11,F12,F13,G9,J14,K15	PWR			1.8V or 3.3-V dual-voltage LVCMOS I/O supply voltage pins, Group B
DVDD3318_C (I/O supply)	J5,K13,L4,L13,M13,N13,P5,P6,P12,R4	PWR			1.8V or 3.3-V dual-voltage LVCMOS I/O supply voltage pins, Group C
VSS (Ground)	A19,H8,H9,H15,J7,J8,J9,J10,J11,K7,K8,K9,K10,K11,L5,L7,L8,L9,L10,L11,M4,M5,M6,M7,M10,M11,N5,N11,N12,P11	GND			Ground pins.
USB_CVDD	M12	PWR			USB0 core logic 1.2-V supply input
SATA_VDD	M2,N4,P1,P2	PWR			SATA PHY 1.2V logic supply
SATA_VSS	H1,H2,K1,K2,L3,M1	GND			SATA PHY ground reference
DDR_DVDD18	N6,N9,N10,P7,P8,P9,P10,R7,R8,R9	PWR			DDR PHY 1.8V power supply pins

LAN8720A-CP-TR (MAIN : U8206)

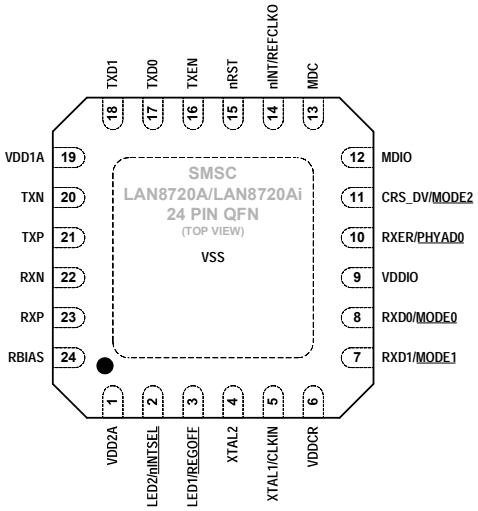

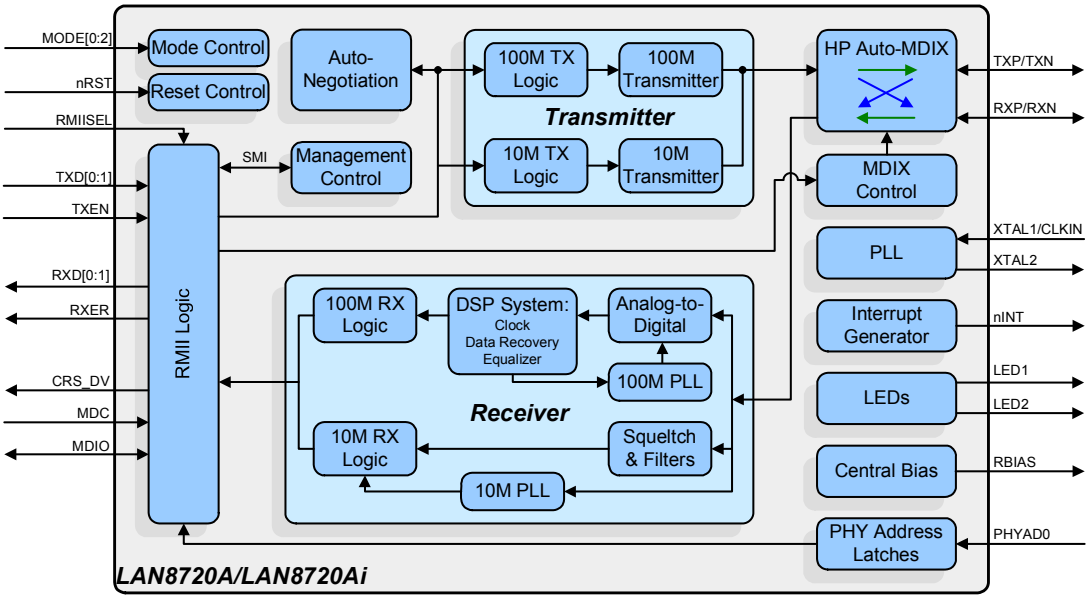

Pin Function

PIN NUM	PIN NAME	PIN NUM	PIN NAME
1	VDD2A	13	MDC
2	LED2/nINTSEL	14	nINT/REFCLKO
3	LED1/REGOFF	15	nRST
4	XTAL2	16	TXEN
5	XTAL1/CLKIN	17	TXD0
6	VDDCR	18	TXD1
7	RXD1/MODE1	19	VDD1A
8	RXD0/MODE0	20	TXN
9	VDDIO	21	TXP
10	RXER/PHYAD0	22	RXN
11	CRS_DV/MODE2	23	RXP
12	MDIO	24	RBIAS

R5F101JCA205 (REMOTE : IC3003)

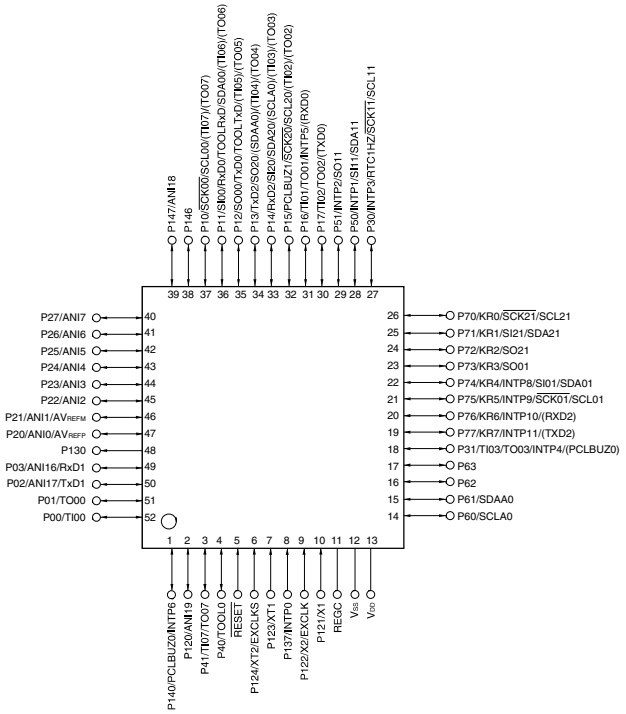

R5F101JCA205 Pin function

No	Port	Function	Connect
1	P140	IR Remote port	IR Remote
2	P120	NC	PU
3	P41	Stby Controll port	STBY sig
4	P40	TOOL signal	MAIN CPU
5	RESET	Reset	MAIN CPU
6	P124	XIN	Xtal
7	P123	XOUT	Xtal
8	P137	5V stby	5V stby
9	P122	Prallel remote Port	OPEN
10	P121	Prallel remote Port	GND
11	REGC	REG Port	Capacitor
12	VSS	GND	DGND
13	VDD	5V VDD	+5Vstby
14	P60	Prallel remote Port	Parallel remote
15	P61	Prallel remote Port	Parallel remote
16	P62	Prallel remote Port	Parallel remote
17	P63	Prallel remote Port	Parallel remote
18	P31	KEYSENS port	Keysens
19	P77	Paralell remote port	Parallel remote
20	P76	Paralell remote port	Parallel remote
21	P75	Paralell remote port	Parallel remote
22	P74	Paralell remote port	Parallel remote
23	P73	Paralell remote port	Parallel remote
24	P72	Paralell remote port	Parallel remote
25	P71	Paralell remote port	Parallel remote
26	P70	Paralell remote port	Parallel remote
27	P30	KEYSENS port	Dirve TR (PANEL1)
28	P50	JOG A port	Encoder Volume
29	P51	JOG B port	Encoder Volume
30	P17	TARRY Signal	Parallel remote
31	P16	TARRY Signal	Parallel remote
32	P15	TARRY Signal	Parallel remote
33	P140	TARRY Signal	Parallel remote
34	P137	TARRY Signal	Parallel remote
35	P12	Serial UART RXD	Main CPU
36	P11	Serial UART TxD	Main CPU
37	P10	LED controll port	LED Circuit
38	P146	KEYSENS port	LED Circuit
39	P147	HP VOL	
40	P27	KEY Matrix port	LED Circuit

No	Port	Function	Connect
41	P26	KEY Matrix port	LED Circuit
42	P25	KEY Matrix port	LED Circuit
43	P24	LED controll port	LED Circuit
44	P23	LED controll port	LED Circuit
45	P22	LED controll port	LED Circuit
46	P21	LED controll port	LED Circuit
47	P20	LED controll port	LED Circuit
48	P130	NC	OPEN
49	P03	RS232 Serial I/F Uart RXD	Serial I/F
50	P02	RS232 Serial I/F Uart TXD	Serial I/F
51	P01	Paralell remote port	Parallel remote
52	P00	Paralell remote port	Parallel remote

2. DISPLAY

OLED MX4035A (EXPLODED)

端子番号 Pin No.	端子名 Pin Name	入出力 IO	機能 Functions
1	VSS	P	グランド GND
2	VCC	P	ドライバー系陽極電源 Power supply for Anode Driver
3	VCOMH	O	ドライバー系陰極電源 Power supply for Cathode Driver
4	VLSS	P	アナロググランド Analog system ground
5	CLS	I	VDDIO に接続 Connected to VDDIO
6	D7	I	データバス Data Bus
7	D6	I	データバス Data Bus
8	D5	I	データバス Data Bus
9	D4	I	データバス Data Bus
10	D3	I	データバス Data Bus
11	D2	I	データバス Data Bus
12	D1 (SDIN)	I	データバス、またはシリアルデータ入力 Data Bus or Serial Date Input
13	D0 (SCLK)	I	データバス、またはシリアルクロック入力 Data Bus or Serial Clock Input
14	E, RD#	I	読み出し（シリアルインターフェース時、内部で″L″固定になる） Read (This pin stays "L"(low) in Serial Interface Mode)
15	R/W#, WR#	I	書き込み（シリアルインターフェース時、内部で″L″固定になる） Write (This pin stays "L"(low) in Serial Interface Mode)
16	BS0	I	インターフェース選択子 Select MCU bus interface setting ・BS0=0, BS1=0 : 4 line SPI ・BS0=0, BS1=1 : 8bit 8080 Parallel ・BS0=1, BS1=0 : 3 line SPI ・BS0=1, BS1=1 : 8bit 6800 Parallel
17	BS1	I	
18	D/C#	I	データ/コマンド切替制御 ″H″:データ, ″L″:コマンド Data/Command Control. "H":Data, "L":Command
19	CS#	I	チップセレクト ″L″でI/F通信可能 Chip Select, Active "L"
20	RES#	I	リセット ″L″でリセット Reset, Active "L"
21	VSS	P	グランド GND
22	CL	I	VSSに接続してください。 Connected to VSS
23	IREF	O	陽極出力基準電流設定端子 Reference current setting
24	NC	-	
25	VDDIO	P	インターフェイス系電源 Power supply for Interface logic level
26	VDD	O	内部ロジック系電源 Power supply for Core logic operation
27	VCI	P	外部ロジック系電源 Low voltage power supply
28	VSL	P	陽極基準電位 Segment Reference voltage
29	VLSS	P	アナロググランド Analog system ground
30	VCC	P	ドライバー系陽極電源 Power supply for Anode Driver

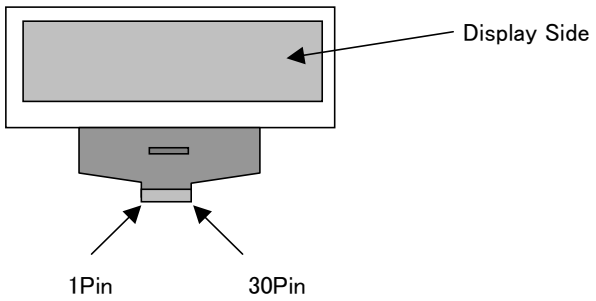

MAIN PCB ASS'Y

NOTE:The symbols in the column Remarks indicate the following destinations.
E3 : U.S.A. & Canada model E2 : Europe model E1C : China model E1 : Asia model JP : Japan model
BK : Black model SP : Premium Silver model

	REF No.	Part No.	Part Name	Remarks		Q'ty	New	Ver
	SEMICONDUCTORS GROUP							
	D8001	00D2760751901	D,RECTIFIER CHIP 1SR154-400 TE25(SMD)		K0451540000000S	1		
	D8004	00D2760750902	D,SCHOTTKY CHIP RB521S-30 HIGH SPEED SWITCHING-1608REEL		K125521300010S	1		
	D8006-8008	00D2760751901	D,RECTIFIER CHIP 1SR154-400 TE25(SMD)		K0451540000000S	3		
	D8009	00MHI10101210	LED,THICK SML-311UT (ROHM) RED		K5200311200010S	1		
	D8010,8011	2513100045075	D,ESD CHIP CG0603MLC-12LE ESD PROTECTOR-1608REEL		K067060305500S	2		
	D8014-8017	2513100045075	D,ESD CHIP CG0603MLC-12LE ESD PROTECTOR-1608REEL		K067060305500S	4		
	D8018	9632020034905	D,ZENER CHIP 0.2W 6.2V UDZ S SERIES (UMD2 TYPE)		K06606R24P400S	1		
	Q8001	00D2690238905	SEMI,CHIP TR/PNP 2SA DTA123EKAT146 0.2W/SMT3-REEL		J5200123E0210S	1		
	Q8004-8006	2124500045095	SEMI,CHIP TR/PNP 2SB 2SB1689 SOT-323		J5211689000010S	3		
	Q8007	00D2690192902	SEMI,CHIP TR/NPN 2SC KRC102S (NB) 0.2W/SOT-23 REEL		J5220102002105	1		
	Q8008	00D2730464901	SEMI,CHIP TR/NPN 2SC KTC3875G(ALG) 0.15W/SMT-REEL		J5223875G0210S	1		
	Q8009,8010	00D2690192902	SEMI,CHIP TR/NPN 2SC KRC102S (NB) 0.2W/SOT-23 REEL		J5220102002105	2		
	Q8012	2124500045095	SEMI,CHIP TR/PNP 2SB 2SB1689 SOT-323		J5211689000010S	1		
	Q8013	00D2690192902	SEMI,CHIP TR/NPN 2SC KRC102S (NB) 0.2W/SOT-23 REEL		J5220102002105	1		
	Q8014	00D2690184907	SEMI,CHIP TR/PNP 2SA KRA102S(PB) 0.2W/SOT-23 REEL		J5200102002105	1		
	Q8015	00D2690192902	SEMI,CHIP TR/NPN 2SC KRC102S (NB) 0.2W/SOT-23 REEL		J5220102002105	1		
	U8001	23981005760AS	IC,MEMORY-RAM K4T1G164QF-BCE7		J0014T1016471S	1		
	U8002	9632391011905	IC,LINEAR-RESET RNA51957BFP SOP8P SYSTEM RESETTING IC		J1255195700105	1	*	
	U8003	00D2622977946	IC,LINEAR-REGULATOR BA33BC0FP TO252-3 3.3V 1A(LOW DROP)		J12603R300040S	1		
	U8004	nsp	IC,LOGIC-D/D CONVER EX3AV 3A VOL DC-DC CONVERTER QFN38		J0480300300105	1		
	U8005	9632451004605P	IC,ANALOG OMAP-L138 C6-INTEGRA DSP+ARM PROCESOSR PBGA361		J0801380000105	1	*	
	U8006	9632321003505P	IC,LINEAR-REGULATOR NJM2845DL1-18 1.8V TO-252-3 LOW-DROP VOL REGULATOR		J1262845180105	1		
	U8007	9632351006105P	IC,LOGIC APL3510CBI USB POWER DISTRIBUTION SWITCH		J0403510000105	1		
	U8008	9632371001505P	IC,LOGIC TS3USB221RSER TSOOP10P		J0403221010105	1		
	U8010	00D2622977946	IC,LINEAR-REGULATOR BA33BC0FP TO252-3 3.3V 1A(LOW DROP)		J12603R300040S	1		
	U8011	00D2622557900	IC,LOGIC SN74LV14APWR HEX SCHMITT-TRIGGER INVERTERS TSOP14		J0407414001805	1		
	U8201	00D2622518907	IC,LOGIC SN74LV74APW-EL2 TSSOP14		J0407474016105	1		
	U8202	9632350004905	IC,LOGIC SN74LV08APW-EL2 2-INPUT AND GATE TSOP14		J0407408002305	1		
	U8203	9632481024305P	8952700000053 MX29LV320EBTI-70G DN500R		8952700000053	1	*	
	U8204	00D2622516909	IC,LOGIC SN74LV32APW-EL2 TSSOP16		J0407432016105	1		
	U8205	9632341002405P	IC,LOGIC SN74LV245APW-EL2 TSSOP20		J0407424516105	1		
	U8210	9632361014905P	IC,LINEAR PLL1707DBQR SSOP20 DUAL PLL MULTICLOCK GENERATOR		J1201707000105	1		
	U8212	23681014050AS	IC,LOGIC-INTERFACE PCM9211 TRANSCEIVER LQFP48		J0469211000105	1		
	U8214	00D2622557900	IC,LOGIC SN74LV14APWR HEX SCHMITT-TRIGGER INVERTERS TSOP14		J0407414001805	1		
	RESISTOR GROUP							
	R8000	nsp	R,CHIP THICK 0-J,1/16W-1005REEL		C20000006M101S	1		
	R8001	nsp	R,CHIP THICK 15K-J,1/16W-1005REEL		C20001536M101S	1		
	R8002	nsp	R,CHIP THICK 6.2K-D,1/16W-1608REEL		C20006221M160S	1		
	R8004	nsp	R,CHIP THICK 2.2K-J,1/16W-1005REEL		C20002226M101S	1		
	R8005	nsp	R,CHIP THICK 0-J,1/16W-1005REEL		C20000006M101S	1		
	R8011	nsp	R,CHIP THICK 22-J,1/16W-1005REEL		C20002206M101S	1		
	R8012	nsp	R,CHIP THICK 1K-D,1/16W-1608REEL		C20001021M160S	1		
	R8013-8030	nsp	R,CHIP THICK 22-J,1/16W-1005REEL		C20002206M101S	18		
	R8031	nsp	R,CHIP THICK 100K-J,1/16W-1005REEL		C20001046M101S	1		
	R8032	nsp	R,CHIP THICK 1K-D,1/16W-1608REEL		C20001021M160S	1		
	R8033,8034	nsp	R,CHIP THICK 150K-D,1/16W-1608REEL		C20001541M161S	2		
	R8036,8037	nsp	R,CHIP THICK 100-J,1/16W-1005REEL		C20001016M101S	2		
	R8038-8063	nsp	R,CHIP THICK 22-J,1/16W-1005REEL		C20002206M101S	26		
	R8064-8068	nsp	R,CHIP THICK 10K-J,1/16W-1005REEL		C20001036M111S	5		
	R8069	nsp	R,CHIP THICK 1K-J,1/16W-1005REEL		C20001026M101S	1		
	R8070	nsp	R,CHIP THICK 100-J,1/16W-1005REEL		C20001016M101S	1		
	R8071-8079	nsp	R,CHIP THICK 22-J,1/16W-1005REEL		C20002206M101S	9		
	R8087	nsp	R,CHIP THICK 22-J,1/16W-1005REEL		C20002206M101S	1		
	R8089	nsp	R,CHIP THICK 22-J,1/16W-1005REEL		C20002206M101S	1		
	R8091	nsp	R,CHIP THICK 22-J,1/16W-1005REEL		C20002206M101S	1		
	R8093	nsp	R,CHIP THICK 22-J,1/16W-1005REEL		C20002206M101S	1		
	R8094	nsp	R,CHIP THICK 2.2K-J,1/16W-1005REEL		C20002226M101S	1		
	R8095-8099	nsp	R,CHIP THICK 22-J,1/16W-1005REEL		C20002206M101S	5		
	R8100	nsp	R,CHIP THICK 0-J,1/16W-1005REEL		C20000006M101S	1		
	R8101-8105	nsp	R,CHIP THICK 22-J,1/16W-1005REEL		C20002206M101S	5		
	R8106-8109	nsp	R,CHIP THICK 2.2K-J,1/16W-1005REEL		C20002226M101S	4		
	R8110	nsp	R,CHIP THICK 1M-J,1/16W-1005REEL		C20001056M101S	1		
	R8113	nsp	R,CHIP THICK 10K-J,1/16W-1005REEL		C20001036M111S	1		
	R8114	nsp	R,CHIP THICK 2.2K-J,1/16W-1005REEL		C20002226M101S	1		
	R8116-8122	nsp	R,CHIP THICK 22-J,1/16W-1005REEL		C20002206M101S	7		
	R8123-8125	nsp	R,CHIP THICK 68-J,1/16W-1005REEL		C20006806M101S	3		
	R8126	nsp	R,CHIP THICK 1K-J,1/16W-1005REEL		C20001026M101S	1		
	R8127	nsp	R,CHIP THICK 10K-J,1/16W-1005REEL		C20001036M111S	1		
	R8128	nsp	R,CHIP THICK 22-J,1/16W-1005REEL		C20002206M101S	1		
	R8131,8132	nsp	R,CHIP THICK 68-J,1/16W-1005REEL		C20006806M101S	2		
	R8135	nsp	R,CHIP THICK 10K-J,1/16W-1005REEL		C20001036M111S	1		
	R8141	nsp	R,CHIP THICK 10K-J,1/16W-1005REEL		C20001036M111S	1		
	R8142	nsp	R,CHIP THICK 22-J,1/16W-1005REEL		C20002206M101S	1		
	R8143	nsp	R,CHIP THICK 1.8K-J,1/16W-1608REEL		C20001826M160S	1		
	R8144,8145	nsp	R,CHIP THICK 2.2K-J,1/16W-1005REEL		C20002226M101S	2		
	R8150-8159	nsp	R,CHIP THICK 10K-J,1/16W-1005REEL		C20001036M111S	10		
	R8161-8164	nsp	R,CHIP THICK 10K-J,1/16W-1005REEL		C20001036M111S	4		
	R8165-8167	nsp	R,CHIP THICK 75-J,1/16W-1005REEL		C20007506M101S	3		
	R8168	nsp	R,CHIP THICK 22-J,1/16W-1005REEL		C20002206M101S	1		
	R8169,8170	nsp	R,CHIP THICK 75-J,1/16W-1005REEL		C20007506M101S	2		
	R8171,8172	nsp	R,CHIP THICK 22-J,1/16W-1005REEL		C20002206M101S	2		
	R8181,8182	nsp	R,CHIP THICK 10K-J,1/16W-1005REEL		C20001036M111S	2		
	R8184	nsp	R,NETWORK A-TYPE 68-J*4 1/16W SMD(1005)		C1806800405005	1		
	R8186,8187	nsp	R,NETWORK A-TYPE 68-J*4 1/16W SMD(1005)		C1806800405005	2		
	R8188-8193	nsp	R,NETWORK A-TYPE 22-J*4 1/16W SMD(1005) 8P MNR04M0APJ220		C1802200803505	6		
	R8201	nsp	R,CHIP THICK 10K-J,1/16W-1005REEL		C20001036M111S	1		
	R8202,8203	nsp	R,CHIP THICK 0-J,1/16W-1005REEL		C20000006M101S	2		
	R8206	nsp	R,CHIP THICK 22-J,1/16W-1005REEL		C20002206M101S	1		
	R8207,8208	nsp	R,NETWORK A-TYPE 22-J*4 1/16W SMD(1005) 8P MNR04M0APJ220		C1802200803505	2		
	R8209	nsp	R,CHIP THICK 10K-J,1/16W-1005REEL		C20001036M111S	1		
	R8212-8215	nsp	R,CHIP THICK 10K-J,1/16W-1005REEL		C20001036M111S	4		
	R8216-8231	nsp	R,CHIP THICK 22-J,1/16W-1005REEL		C20002206M101S	16		
	R8232	nsp	R,CHIP THICK 47-J,1/16W-1005REEL		C20004706M101S	1		
	R8239-8244	nsp	R,CHIP THICK 47-J,1/16W-1005REEL		C20004706M101S	6		
	R8245	nsp	R,CHIP THICK 82-J,1/16W-1005REEL		C20008206M101S	1		
	R8247	nsp	R,CHIP THICK 1K-J,1/16W-1005REEL		C20001026M101S	1		
	R8248,8249	nsp	R,CHIP THICK 10K-J,1/16W-1005REEL		C20001036M111S	2		
	R8250	nsp	R,CHIP THICK 82-J,1/16W-1005REEL		C20008206M101S	1		
	R8251	nsp	R,CHIP THICK 1.5K-J,1/16W-1005REEL		C20001526M101S	1		
	R8252	nsp	R,CHIP THICK 10-J,1/16W-1005REEL		C20001006M101S	1		
	R8253	nsp	R,CHIP THICK 33-J,1/16W-1005REEL		C20003306M101S	1		
	R8254	nsp	R,CHIP THICK 0-J,1/16W-1005REEL		C20000006M101S	1		
	R8258	nsp	R,CHIP THICK 470-J,1/16W-1005REEL		C20004716M101S	1		
	R8259	nsp	R,CHIP THICK 180-J,1/16W-1005REEL		C20001816M101S	1		

	REF No.	Part No.	Part Name	Remarks		Q'ty	New	Ver
	R8262	nsp	R,CHIP THICK 0-J,1/16W-1005REEL		C20000006M101S	1		
	R8263	nsp	R,CHIP THICK 680-J,1/16W-1608REEL		C20006816M160S	1		
	R8269-8271	nsp	R,CHIP THICK 22-J,1/16W-1005REEL		C20002206M101S	3		
	R8273	nsp	R,CHIP THICK 22-J,1/16W-1005REEL		C20002206M101S	1		
	R8274	nsp	R,CHIP THICK 33-J,1/16W-1005REEL		C20003306M101S	1		
	R8276	nsp	R,CHIP THICK 22-J,1/16W-1005REEL		C20002206M101S	1		
	R8278	nsp	R,CHIP THICK 22-J,1/16W-1005REEL		C20002206M101S	1		
	R8280	nsp	R,CHIP THICK 22-J,1/16W-1005REEL		C20002206M101S	1		
	R8282	nsp	R,CHIP THICK 22-J,1/16W-1005REEL		C20002206M101S	1		
	R8291-8294	nsp	R,NETWORK A-TYPE 47*4 1/16W SMD(1005)		C1804700405005	4		
	R8296	nsp	R,CHIP THICK 100-J,1/16W-1005REEL		C20001016M101S	1		
	R8297-8301	nsp	R,CHIP THICK 22-J,1/16W-1005REEL		C20002206M101S	5		
	R8307,8308	nsp	R,CHIP THICK 22-J,1/16W-1005REEL		C20002206M101S	2		
	R8309	nsp	R,CHIP THICK 33-J,1/16W-1005REEL		C20003306M101S	1		
	R8310-8315	nsp	R,CHIP THICK 22-J,1/16W-1005REEL		C20002206M101S	6		
	R8316,8317	nsp	R,NETWORK A-TYPE 47*4 1/16W SMD(1005)		C1804700405005	2		
	R8319	nsp	R,CHIP THICK 22-J,1/16W-1005REEL		C20002206M101S	1		
	R8321	nsp	R,CHIP THICK 0-J,1/16W-1005REEL		C20000006M101S	1		
	R8322,8323	nsp	R,CHIP THICK 22-J,1/16W-1005REEL		C20002206M101S	2		
	R8324	nsp	R,CHIP THICK 0-J,1/16W-1005REEL		C20000006M101S	1		
	R8325	nsp	R,CHIP THICK 47K-J,1/16W-1005REEL		C20004736M100S	1		
	R8326-8328	nsp	R,CHIP THICK 1K-J,1/16W-1005REEL		C20001026M101S	3		
	R8329	nsp	R,CHIP THICK 470-J,1/16W-1005REEL		C20004716M101S	1		
	R8332	nsp	R,CHIP THICK 0-J,1/16W-1005REEL		C20000006M101S	1		
	R8335	nsp	R,CHIP THICK 10K-J,1/16W-1005REEL		C20001036M111S	1		
	R8336-8340	nsp	R,CHIP THICK 68-J,1/16W-1005REEL		C20006806M101S	5		
	R8341,8342	nsp	R,CHIP THICK 22-J,1/16W-1005REEL		C20002206M101S	2		
	R8343,8344	nsp	R,CHIP THICK 10K-J,1/16W-1005REEL		C20001036M111S	2		
	R8347	nsp	R,CHIP THICK 22K-J,1/16W-1608REEL		C20002236M160S	1		
	R8348	nsp	R,CHIP THICK 33-J,1/16W-1005REEL		C20003306M101S	1		
	R8349,8350	nsp	R,CHIP THICK 22-J,1/16W-1005REEL		C20002206M101S	2		
	R8351	nsp	R,CHIP THICK 100K-J,1/16W-1005REEL		C20001046M101S	1		
	R8352	nsp	R,CHIP THICK 3.3K-J,1/16W-1608REEL		C20003326M160S	1		
	R8353	nsp	R,CHIP THICK 5.6K-F,1/16W-1608REEL		C20005624M161S	1		
	R8354	nsp	R,CHIP THICK 2.7K-F,1/16W-1608REEL		C20002724M161S	1		
	R8359-8364	nsp	R,CHIP THICK 0-J,1/16W-1608REEL		C20000006M160S	6		
	R8365	nsp	R,CHIP THICK 0-J,1/16W-1005REEL		C20000006M101S	1		
	R8367,8368	nsp	R,CHIP THICK 0-J,1/16W-1005REEL		C20000006M101S	2		
	R8369-8382	nsp	R,CHIP THICK 0-J,1/16W-1608REEL		C20000006M160S	14		
	CAPACIITORS GROUP							
	C8001	nsp	C,CERAMIC CHIP HIK Y5V 0.47UF-K/10V-1608REEL		D011474572160S	1		
	C8004,8005	nsp	C,CERAMIC CHIP HIK X7R)0.1UF-K/10V-1005REEL		D011104172101S	2		
	C8006	00D2572019909	C,TANTALUM CHIP(TC) 47UF-M/6.3V-3.5*2.8 REEL(SMD) NOJB476M006RWJ		D070470081351S	1		
	C8007	nsp	C,CERAMIC CHIP HIK X7R)0.01UF-K/25V-1005REEL		D011103174101S	1		
	C8008	nsp	C,CERAMIC CHIP HIK X5R)10UF-K/16V-2012REEL GRM21BR61C106KE15L		D011106573200S	1		
	C8010	nsp	C,CERAMIC CHIP HIK Y5V0.1UF-Z/50V-1608REEL		D011104597160S	1		
	C8011	nsp	C,CERAMIC CHIP HIK X7R)0.1UF-K/10V-1005REEL		D011104172101S	1		
	C8012	nsp	C,CERAMIC CHIP HIK CK73B1A106KT +2125 MURATA		D011106070010S	1		
	C8014	nsp	C,CERAMIC CHIP HIK X7R)0.1UF-K/10V-1005REEL		D011104172101S	1		
	C8015	nsp	C,CERAMIC CHIP HIK Y5V0.1UF-Z/50V-1608REEL		D011104597160S	1		
	C8016	nsp	C,CERAMIC CHIP HIK X5R)10UF-K/16V-2012REEL GRM21BR61C106KE15L		D011106573200S	1		
	C8017-8020	nsp	C,CERAMIC CHIP HIK X7R)0.1UF-K/10V-1005REEL		D011104172101S	4		
	C8021	nsp	C,CERAMIC CHIP HIK X5R)10UF-K/16V-2012REEL GRM21BR61C106KE15L		D011106573200S	1		
	C8022-8025	nsp	C,CERAMIC CHIP HIK X7R)0.1UF-K/10V-1005REEL		D011104172101S	4		
	C8026	nsp	C,CERAMIC CHIP HIK X7R)0.01UF-K/25V-1005REEL		D011103174101S	1		
	C8027-8029	nsp	C,CERAMIC CHIP HIK X7R)0.1UF-K/10V-1005REEL		D011104172101S	3		
	C8030,8031	nsp	C,CERAMIC CHIP HIK X5R)10UF-K/16V-2012REEL GRM21BR61C106KE15L		D011106573200S	2		
	C8032	nsp	C,CERAMIC CHIP HIK X7R)0.1UF-K/10V-1005REEL		D011104172101S	1		
	C8033	nsp	C,CERAMIC CHIP HIK X7R)0.01UF-K/25V-1005REEL		D011103174101S	1		
	C8034	nsp	C,CERAMIC CHIP HIK X7R)0.1UF-K/10V-1005REEL		D011104172101S	1		
	C8035	nsp	C,CERAMIC CHIP HIK X7R)0.01UF-K/25V-1005REEL		D011103174101S	1		
	C8036	nsp	C,CERAMIC CHIP HIK X7R)0.1UF-K/10V-1005REEL		D011104172101S	1		
	C8037	00D2572019909	C,TANTALUM CHIP(TC) 47UF-M/6.3V-3.5*2.8 REEL(SMD) NOJB476M006RWJ		D070470081351S	1		
	C8038,8039	nsp	C,CERAMIC CHIP HIK X7R)0.1UF-K/10V-1005REEL		D011104172101S	2		
	C8040	nsp	C,CERAMIC CHIP HIK COG)10PF-D/50V-1005REEL		D011100117101S	1		
	C8041	nsp	C,CERAMIC CHIP HIK X7R)0.22UF-K/25V-1608REEL TDK		D011224774162S	1		
	C8042	nsp	C,CERAMIC CHIP HIK X7R)0.1UF-K/10V-1005REEL		D011104172101S	1		
	C8044,8045	nsp	C,CERAMIC CHIP HIK X7R)0.1UF-K/10V-1005REEL		D011104172101S	2		
	C8046	nsp	C,CERAMIC CHIP HIK X5R)10UF-K/16V-2012REEL GRM21BR61C106KE15L		D011106573200S	1		
	C8047-8061	nsp	C,CERAMIC CHIP HIK X7R)0.1UF-K/10V-1005REEL		D011104172101S	15		
	C8063	nsp	C,CERAMIC CHIP HIK X7R)0.1UF-K/10V-1005REEL		D011104172101S	1		
	C8065	nsp	C,CERAMIC CHIP HIK X7R)0.1UF-K/10V-1005REEL		D011104172101S	1		
	C8067	nsp	C,CERAMIC CHIP HIK X7R)0.1UF-K/10V-1005REEL		D011104172101S	1		
	C8069	nsp	C,CERAMIC CHIP HIK X7R)0.1UF-K/10V-1005REEL		D011104172101S	1		
	C8071,8072	nsp	C,CERAMIC CHIP HIK X7R)0.1UF-K/10V-1005REEL		D011104172101S	2		
	C8074-8080	nsp	C,CERAMIC CHIP HIK X7R)0.1UF-K/10V-1005REEL		D011104172101S	7		
	C8081	nsp	C,CERAMIC CHIP HIK X5R)10UF-K/16V-2012REEL GRM21BR61C106KE15L		D011106573200S	1		
	C8082	nsp	C,CERAMIC CHIP HIK X7R)0.1UF-K/10V-1005REEL		D011104172101S	1		
	C8083	nsp	C,CERAMIC CHIP HIK X5R)4.7UF-M/6.3V-1005REEL		D011475581101S	1		
	C8084	nsp	C,CERAMIC CHIP HIK X5R)10UF-K/16V-2012REEL GRM21BR61C106KE15L		D011106573200S	1		
	C8085-8097	nsp	C,CERAMIC CHIP HIK X7R)0.1UF-K/10V-1005REEL		D011104172101S	13		
	C8098,8099	nsp	C,CERAMIC CHIP T.C COG12PF-J/50V-1608REEL		D010120167160S	2		
	C8100	nsp	C,CERAMIC CHIP HIK X7R)0.01UF-K/25V-1005REEL		D011103174101S	1		
	C8101	nsp	C,CERAMIC CHIP HIK X5R)10UF-K/16V-2012REEL GRM21BR61C106KE15L		D011106573200S	1		
	C8104	nsp	C,CERAMIC CHIP HIK X7R)1UF-K/10V-1608REEL		D011105772161S	1		
	C8105	nsp	C,CERAMIC CHIP HIK X7R)0.1UF-K/10V-1005REEL		D011104172101S	1		
	C8115	nsp	C,CERAMIC CHIP HIK X5R)10UF-K/16V-2012REEL GRM21BR61C106KE15L		D011106573200S	1		
	C8116,8117	nsp	C,CERAMIC CHIP HIK Y5V0.1UF-Z/50V-1608REEL		D011104597160S	2		
	C8118	nsp	C,CERAMIC CHIP HIK X5R)10UF-K/16V-2012REEL GRM21BR61C106KE15L		D011106573200S	1		
	C8119	nsp	C,CERAMIC CHIP HIK X7R)0.1UF-K/10V-1005REEL		D011104172101S	1		
	C8122	nsp	C,CERAMIC CHIP HIK X5R)10UF-K/16V-2012REEL GRM21BR61C106KE15L		D011106573200S	1		
	C8127,8128	nsp	C,CERAMIC CHIP HIK X7R)0.1UF-K/10V-1005REEL		D011104172101S	2		
	C8129,8130	963132500580S	C,CERAMIC CHIP HIK X5R)100UF-M/6.3V-3225REEL C3225X5R0J107M		D011107581312S	2		
	C8201,8202	nsp	C,CERAMIC CHIP HIK X7R)0.1UF-K/10V-1005REEL		D011104172101S	2		
	C8203	nsp	C,CERAMIC CHIP T.C COG47PF-J/50V-1608REEL		D010470167160S	1		
	C8204-8207	nsp	C,CERAMIC CHIP HIK X7R)0.1UF-K/10V-1005REEL		D011104172101S	4		
	C8208	nsp	C,CERAMIC CHIP HIK X7R)0.01UF-K/25V-1005REEL		D011103174101S	1		
	C8209-8219	nsp	C,CERAMIC CHIP T.C COG10PF-D/50V-1608REEL		D010100117160S	11		
	C8220,8221	nsp	C,CERAMIC CHIP HIK X7R)0.01UF-K/25V-1005REEL		D011103174101S	2		
	C8222-8225	nsp	C,CERAMIC CHIP T.C COG10PF-D/50V-1608REEL		D010100117160S	4		
	C8226	nsp	C,CERAMIC CHIP HIK X7R)0.01UF-K/25V-1005REEL		D011103174101S	1		
	C8233	nsp	C,CERAMIC CHIP HIK X7R)0.1UF-K/10V-1005REEL		D011104172101S	1		
	C8234	nsp	C,CERAMIC CHIP HIK COG)100PF-J/50V-1005REEL		D011101167101S	1		
	C8235	nsp	C,CERAMIC CHIP HIK X5R)10UF-K/16V-2012REEL GRM21BR61C106KE15L		D011106573200S	1		
	C8237	nsp	C,CERAMIC CHIP HIK X7R)0.1UF-K/10V-1005REEL		D011104172101S	1		
	C8238	nsp	C,CERAMIC CHIP T.C COG8PF-D/50V-1608REEL		D010080117160S	1		
	C8240,8241	nsp	C,CERAMIC CHIP HIK X7R)0.1UF-K/10V-1005REEL		D011104172101S	2		
	C8242	nsp	C,CERAMIC CHIP T.C COG8PF-D/50V-1608REEL		D010080117160S	1		
	C8243,8244	nsp	C,CERAMIC CHIP HIK X7R)0.1UF-K/10V-1005REEL		D011104172101S	2		
	C8253	00D9630338606	C,ELECT CHIP(GE) 10UF-MVG/16V,3.3*3.7*5.2 REEL (Z8154) SY		D050100083470S	1		
	C8254	nsp	C,CERAMIC CHIP T.C X7R 0.068UF-K/50V-1608REEL		D010683777160S	1		
	C8255	nsp	C,CERAMIC CHIP HIK X7R)0.1UF-K/10V-1005REEL		D011104172101S	1		

	REF No.	Part No.	Part Name	Remarks		Q'ty	New	Ver
	C8256	nsp	C,CERAMIC CHIP HIK X7R4700PF-K/50V-1608REEL		D011472777160S	1		
	C8257	00D2572019909	C,TANTALUM CHIP(TC) 47UF-M/6.3V-3.5*2.8 REEL(SMD) NOJB476M006RWJ		D070470081351S	1		
	C8258,8259	nsp	C,CERAMIC CHIP HIK X7R)0.1UF-K/10V-1005REEL		D011104172101S	2		
	C8261	nsp	C,CERAMIC CHIP HIK X7R)0.1UF-K/10V-1005REEL		D011104172101S	1		
	C8265	nsp	C,CERAMIC CHIP HIK X7R)0.1UF-K/10V-1005REEL		D011104172101S	1		
	C8270	nsp	C,CERAMIC CHIP HIK X7R)0.1UF-K/10V-1005REEL		D011104172101S	1		
	C8274-8285	nsp	C,CERAMIC CHIP T.C COG10PF-D/50V-1608REEL		D010100117160S	12		
	C8286,8287	nsp	C,CERAMIC CHIP HIK X7R)0.01UF-K/25V-1005REEL		D011103174101S	2		
	C8289-8295	nsp	C,CERAMIC CHIP T.C COG10PF-D/50V-1608REEL		D010100117160S	7		
	C8297	nsp	C,CERAMIC CHIP HIK X7R)0.01UF-K/25V-1005REEL		D011103174101S	1		
	C8298	nsp	C,CERAMIC CHIP HIK X5R)0.47UF-K/6.3V-1005REEL		D011474571100S	1		
	C8299	nsp	C,CERAMIC CHIP HIK X7R)0.022UF-K/25V-1005REEL		D011223174101S	1		
	C8301	nsp	C,CERAMIC CHIP HIK X7R)0.1UF-K/10V-1005REEL		D011104172101S	1		
	C8302-8306	nsp	C,CERAMIC CHIP HIK X5R)10UF-K/16V-2012REEL GRM21BR61C106KE15L		D011106573200S	5		
	C8307	nsp	C,CERAMIC CHIP HIK X7R)0.1UF-K/10V-1005REEL		D011104172101S	1		
	C8314	nsp	C,CERAMIC CHIP HIK X7R)0.01UF-K/25V-1005REEL		D011103174101S	1		
	C8315	nsp	C,CERAMIC CHIP HIK X7R)0.1UF-K/10V-1005REEL		D011104172101S	1		
	C8316-8319	nsp	C,CERAMIC CHIP HIK X7R)1000PF-K/50V-1005REEL		D011102177101S	4		
	C8322	nsp	C,CERAMIC CHIP HIK X7R)0.1UF-K/10V-1005REEL		D011104172101S	1		
	C8328	nsp	C,CERAMIC CHIP HIK X5R)0.47UF-K/6.3V-1005REEL		D011474571100S	1		
	OTHER PARTS GROUP							
	B8001-8004	nsp	TERMINAL MET37-0002/TAPIG EARTH FITTING		37900408860005	4		
	L8001	nsp	COIL,BEAD BLM21PG221SN1 220ohm 2A SMD2012 TYPE		D340201212210S	1		
	L8002-8005	nsp	COIL,BEAD BLM18PG121SN1D 120ohm SMD1608		D340160831210S	4		
	L8007	nsp	COIL,BEAD BLM21PG221SN1 220ohm 2A SMD2012 TYPE		D340201212210S	1		
	L8008-8010	nsp	COIL,BEAD BLM18PG121SN1D 120ohm SMD1608		D340160831210S	3		
	L8012	nsp	COIL,BEAD BLM18PG121SN1D 120ohm SMD1608		D340160831210S	1		
	L8014	nsp	COIL,CHIP DLP11SN121SL2L 120ohm CHIP COMMON MODE CHOKE COIL		D311121011210S	1		
	L8016	nsp	COIL,CHIP DLP11SN121SL2L 120ohm CHIP COMMON MODE CHOKE COIL		D311121011210S	1		
	L8202	nsp	R,CHIP THICK 0-J,1/16W-1608REEL		C20000006M160S	1		
	L8203	nsp	COIL,BEAD BLM18PG121SN1D 120ohm SMD1608		D340160831210S	1		
	N8001	963644101860S	CN.WAFER 2.0MM 20022WR-10S 10P RA SMT		L101200221020S	1	*	
	N8002	nsp	CN,WIRE BM14B-SRSS-TB J.S.T. Mfg		L000000000010S	1		
	N8003	nsp	CN.FPC 1.0MM 1.0-15S-12PWB 12P HOR SMT TOP		L130100151240S	1		
	N8005	nsp	CN.FPC 1.0MM 1.0-15S-6PWB 6P HOR SMT TOP		L130100150640S	1		
	N8006	644810076505S	CN,SOCKET CONTACT SDK-9BNS-K13-GN(LF)(SN) SD CARD SOCKET		G4820991300105	1		
	N8010	nsp	CN,PLUG CONTACT UAR27-4K5C00		G4800000155205	1		
	N8201	nsp	CN.FPC 1.0MM 1.0-16-4PB-2 4P ST SMT (JSY)		L130100160430S	1		
	N8202	nsp	CN.FPC 1.0MM 1.0-15S-19PWB 19P HOR SMT TOP		L130100151940S	1		
	N8203	nsp	CN.FPC 1.0MM 1.0-15S-21PWB 21P HOR SMT TOP		L130100152140S	1		
	N8207	nsp	CN.FPC 1.0MM 1.0-15S-20PWB 20P HOR SMT TOP		L130100152040S	1		
	S8001	00MSP01014720	SW,PUSH PUSH-SW_SPVP110100		G000110105050S	1		
	X8001	141810049509S	CRYSTAL CHIP FCX-04(24MHz) CL=8PF SMD3225 RIVER		E80524R000080S	1		
	X8201	141810045507S	CRYSTAL CHIP FCX-04(27MHz) CL=7PF SMD3225 RIVER		E80527R000080S	1		

PANEL PCB ASS'Y

NOTE:The symbols in the column Remarks indicate the following destinations.
E3 : U.S.A. & Canada model E2 : Europe model E1C : China model E1 : Asia model JP : Japan model
BK : Black model SP : Premium Silver model

	REF No.	Part No.	Part Name	Remarks		Q'ty	New	Ver
	SEMICONDUCTORS GROUP							
	D501-510	00D2760560901	D,SWITCHING CHIP DAN202KT146 SOT-346		K005020201460S	10		
	IC501	963234100250P	IC,LOGIC SN74HCT138PWR TSSOP16		J040741381610S	1		
	LD503	963263100910P	LED,THICK WEJT61OC-81 AMBER SMD-1608REEL		K5206100310 10S	1		
	LD514	963263100910P	LED,THICK WEJT61OC-81 AMBER SMD-1608REEL		K5206100310 10S	1		
	LD516-519	963263100910P	LED,THICK WEJT61OC-81 AMBER SMD-1608REEL		K5206100310 10S	4		
	LD520,521	963263100920S	LED,THICK SJ-S-1608B-UR RED SMD-REEL		K5201608200 10S	2	*	
	LD522,523	963263100910P	LED,THICK WEJT61OC-81 AMBER SMD-1608REEL		K5206100310 10S	2		
	LD525-527	963263100910P	LED,THICK WEJT61OC-81 AMBER SMD-1608REEL		K5206100310 10S	3		
	LD536	963263100910P	LED,THICK WEJT61OC-81 AMBER SMD-1608REEL		K5206100310 10S	1		
	Q501-507	963211500190P	SEMI,CHIP TR/PNP 2SA KTA1532U USM KEC		J5201532002 10S	7		
	Q508-510	963216500210P	SEMI,CHIP TR/NPN 2SC DTC143EKAT146 0.2W/SMT3-REEL		J5220143E0210S	3		
	ZD103	963202500260S	D,ZENER CHIP 0.2W 2.7V UDZV SERIES (UMD2 TYPE)		K06602R76P400S	1		
	RESISTOR GROUP							
	R501-508	nsp	R,CHIP THICK 100-J,1/16W-1608REEL		C20001016M160S	8		
	R509	nsp	R,CHIP THICK 0-J,1/16W-1608REEL		C20000006M160S	1		
	R510	nsp	R,CHIP THICK 1M-J,1/16W-1608REEL		C20001056M160S	1		
	R511	nsp	R,CHIP THICK 10K-J,1/16W-1608REEL		C20001036M160S	1		
	R512-514	nsp	R,CHIP THICK 100-J,1/16W-1608REEL		C20001016M160S	3		
	R515	nsp	R,CHIP THICK 1K-J,1/16W-1608REEL		C20001026M160S	1		
	R516	nsp	R,CHIP THICK 100K-J,1/16W-1608REEL		C20001046M160S	1		
	R517	nsp	R,CHIP THICK 560-J,1/16W-1608REEL		C20005616M160S	1		
	R518	nsp	R,CHIP THICK 100K-J,1/16W-1608REEL		C20001046M160S	1		
	R519	nsp	R,CHIP THICK 1K-J,1/16W-1608REEL		C20001026M160S	1		
	R520	nsp	R,CHIP THICK 560-J,1/16W-1608REEL		C20005616M160S	1		
	R521	nsp	R,CHIP THICK 100K-J,1/16W-1608REEL		C20001046M160S	1		
	R522	nsp	R,CHIP THICK 1K-J,1/16W-1608REEL		C20001026M160S	1		
	R523	nsp	R,CHIP THICK 560-J,1/16W-1608REEL		C20005616M160S	1		
	R524	nsp	R,CHIP THICK 100K-J,1/16W-1608REEL		C20001046M160S	1		
	R525	nsp	R,CHIP THICK 1K-J,1/16W-1608REEL		C20001026M160S	1		
	R526	nsp	R,CHIP THICK 560-J,1/16W-1608REEL		C20005616M160S	1		
	R527	nsp	R,CHIP THICK 100K-J,1/16W-1608REEL		C20001046M160S	1		
	R528	nsp	R,CHIP THICK 1K-J,1/16W-1608REEL		C20001026M160S	1		
	R529	nsp	R,CHIP THICK 560-J,1/16W-1608REEL		C20005616M160S	1		
	R530	nsp	R,CHIP THICK 100K-J,1/16W-1608REEL		C20001046M160S	1		
	R531	nsp	R,CHIP THICK 1K-J,1/16W-1608REEL		C20001026M160S	1		
	R532	nsp	R,CHIP THICK 560-J,1/16W-1608REEL		C20005616M160S	1		
	R533	nsp	R,CHIP THICK 100K-J,1/16W-1608REEL		C20001046M160S	1		
	R534	nsp	R,CHIP THICK 1K-J,1/16W-1608REEL		C20001026M160S	1		
	R535	nsp	R,CHIP THICK 560-J,1/16W-1608REEL		C20005616M160S	1		
	R538,539	nsp	R,CHIP THICK 56-J,1/16W-1608REEL		C20005606M160S	2		
	R548-550	nsp	R,CHIP THICK 100-J,1/16W-1608REEL		C20001016M160S	3		
	R552,553	nsp	R,CHIP THICK 100-J,1/16W-1608REEL		C20001016M160S	2		
	R554	nsp	R,CHIP THICK 56-J,1/16W-1608REEL		C20005606M160S	1		
	R555	nsp	R,CHIP THICK 100-J,1/16W-1608REEL		C20001016M160S	1		
	R557,558	nsp	R,CHIP THICK 100-J,1/16W-1608REEL		C20001016M160S	2		
	R559	nsp	R,CHIP THICK 56-J,1/16W-1608REEL		C20005606M160S	1		
	R563,564	nsp	R,CHIP THICK 100-J,1/16W-1608REEL		C20001016M160S	2		
	R569	nsp	R,CHIP THICK 100-J,1/16W-1608REEL		C20001016M160S	1		
	R572,573	nsp	R,CHIP THICK 10K-J,1/16W-1608REEL		C20001036M160S	2		
	R574,575	nsp	R,CHIP THICK 22K-J,1/16W-1608REEL		C20002236M160S	2		
	R576-578	nsp	R,CHIP THICK 10K-J,1/16W-1608REEL		C20001036M160S	3		
	R586,587	nsp	R,CHIP THICK 0-J,1/16W-1608REEL		C20000006M160S	2		
	CAPACIITORS GROUP							
	C254	963134502340P	C,ELECT CHIP(GE) 100UF-M/10V,6.3*5.3 MVG 10VC100 SY		D050101082471S	1		
	C255	nsp	C,CERAMIC CHIP HIK X7R0.1UF-K/50V-1608REEL		D011104577160S	1		
	C256	nsp	C,CERAMIC CHIP HIK Y5V1UF-Z/50V-1608REEL		D011105597160S	1		
	C257	nsp	C,CERAMIC CHIP HIK X7R0.1UF-K/50V-1608REEL		D011104577160S	1		
	C258	nsp	C,CERAMIC CHIP T.C X7R 0.01UF-K/50V-1608REEL		D010103777160S	1		
	C259,260	nsp	C,CERAMIC CHIP HIK X5R)4.7UF-K/25V-2012REEL GRM21BR61E475KA12L MURATA		D011475774200S	2		
	C261	nsp	C,CERAMIC CHIP HIK Y5V1UF-Z/50V-1608REEL		D011105597160S	1		
	C262	nsp	C,CERAMIC CHIP T.C COG)1000PF-J/50V-1608REEL GRM1885C1H102JA01D		D010102167163S	1		
	C263,264	nsp	C,CERAMIC CHIP HIK Y5V1UF-Z/50V-1608REEL		D011105597160S	2		
	C266,267	nsp	C,CERAMIC CHIP HIK X7R0.1UF-K/50V-1608REEL		D011104577160S	2		
	C269	963134502340P	C,ELECT CHIP(GE) 100UF-M/10V,6.3*5.3 MVG 10VC100 SY		D050101082471S	1		
	C270	nsp	C,CERAMIC CHIP HIK X7R0.1UF-K/50V-1608REEL		D011104577160S	1		
	C274	nsp	C,CERAMIC CHIP HIK X7R0.1UF-K/50V-1608REEL		D011104577160S	1		
	C275	00D2544743986	C,ELECT CHIP(GE) 10UF-MVG/50V,5.3*5.9*5.3 REEL (Z8156) SY		D050100087200S	1		
	C281	963134502340P	C,ELECT CHIP(GE) 100UF-M/10V,6.3*5.3 MVG 10VC100 SY		D050101082471S	1		
	C501-511	nsp	C,CERAMIC CHIP T.C COG100PF-J/50V-1608REEL		D010101167160S	11		
	C513-515	nsp	C,CERAMIC CHIP HIK X7R0.1UF-K/50V-1608REEL		D011104577160S	3		
	OTHER PARTS GROUP							
	★	963179100040S	DISPLAY,LED MXS4035A OLED		K5310403500 10S	1		
	CP502	nsp	CN.FPC 1.0MM 10031HR-30 30P RA SMT ZIF BOTTOM CONTACT		L1301003103 00S	1		
	CP503	nsp	CN.FPC 1.0MM 1.0-16-22PB-2 22P ST SMT (JSY)		L1301001622 30S	1		
	CP504	nsp	CN.FPC 1.0MM 1.0-16-10PB-2 10P ST SMT (JSY)		L1301001611 30S	1		
	CP505	nsp	CN.FPC 1.0MM 1.0-16-19PB-2 19P ST SMT (JSY)		L1301001619 30S	1		
	L501	nsp	COIL,BEAD BLM21PG121SN1D 120ohm SMD2012		D3402012355 11S	1		
	L502	nsp	COIL,BEAD BLM18AG121SN1D 120ohm SMD1608		D3401608312 11S	1		
	S501-511	963662100190P	SW,TACT 1157ASND-2		G1800115700 20S	11		
	S513-518	963662100190P	SW,TACT 1157ASND-2		G1800115700 20S	6		
	S519	963667100140P	SW,ENCODER DC11B2021489 11MM ROTATIONAL		G1211120210 10S	1		

AUDIO PCB ASS'Y

NOTE:The symbols in the column Remarks indicate the following destinations.
E3 : U.S.A. & Canada model E2 : Europe model E1C : China model E1 : Asia model JP : Japan model
BK : Black model SP : Premium Silver model

	REF No.	Part No.	Part Name	Remarks		Q'ty	New	Ver
	SEMICONDUCTORS GROUP							
	D101,102	00D9600197000	D,SWITCHING CHIP KDS160(UF) /USC		K005016000010S	2		
	D104	00D2760560901	D,SWITCHING CHIP DAN202KT146 SOT-346		K005020201460S	1		
	D105	00D2760559909	D,SWITCHING CHIP DAP202KT146 SOT-346		K005020211460S	1		
	D106	00D2760560901	D,SWITCHING CHIP DAN202KT146 SOT-346		K005020201460S	1		
	D107,108	00D2760559909	D,SWITCHING CHIP DAP202KT146 SOT-346		K005020211460S	2		
	D109,110	00D2760560901	D,SWITCHING CHIP DAN202KT146 SOT-346		K005020201460S	2		
	IC101	00D2623332904	IC,LOGIC-D/A CONVER PCM1791ADBR 24BIT,192K SAMPLING CONVERTER SSOP28		J042179105510S	1		
	IC102,103	963232100390S	IC,LINEAR OP NJM8080G SOP8 DUAL OP AMP		J121808000010S	2		
	IC104,105	00D2623555901	IC,LINEAR OP SA5532ADR SOIC8P		J121553200050S	2		
	IC106	00D2630896909	IC,LINEAR OP NJM2068MD-SOP8P		J121206800030S	1		
	IC107	00D2621953903	IC,LOGIC SN74LVC3GU04DCTR SSOP8P REEL TRIPLE INVERTER GATE		J040740400320S	1		
	IC109	00D2623555901	IC,LINEAR OP SA5532ADR SOIC8P		J121553200050S	1		
	IC110	00D2623332904	IC,LOGIC-D/A CONVER PCM1791ADBR 24BIT,192K SAMPLING CONVERTER SSOP28		J042179105510S	1		
	IC111	963235100620P	IC,LINEAR OP NJM4556AL		J121455600030S	1		
	IC113	963233100070P	IC,LOGIC UA9638C DUAL DIFFERENTIAL LINE DRIVER SOP8P		J040963800010S	1		
	IC114	00D2621953903	IC,LOGIC SN74LVC3GU04DCTR SSOP8P REEL TRIPLE INVERTER GATE		J040740400320S	1		
	Q103,104	90M-BA0016500	SEMI,CHIP TR/NPN 2SC KRC105S (NE) 0.2W/SOT-23 REEL		J522010500210S	2		
	Q105,106	00D2730460905	SEMI,CHIP TR/NPN 2SC KTC2875B(MB) 0.15W/LOW-ON-RES SOT23(RTK)-REEL		J5222875B0010S	2		
	Q107,108	00D2690192902	SEMI,CHIP TR/NPN 2SC KRC102S (NB) 0.2W/SOT-23 REEL		J522010200210S	2		
	Q109,110	00D2690184907	SEMI,CHIP TR/PNP 2SA KRA102S(PB) 0.2W/SOT-23 REEL		J520010200210S	2		
	Q111	00D2730460905	SEMI,CHIP TR/NPN 2SC KTC2875B(MB) 0.15W/LOW-ON-RES SOT23(RTK)-REEL		J5222875B0010S	1		
	Q112	00D9630148508	SEMI,CHIP TR/PNP 2SA KTA1504S-Y 0.15W SOT-23 REEL		J520015040150S	1		
	Q113	963215500160P	SEMI,TR/GE NPN 2SD KTD863 TO-92L		J503086300010S	1		
	Q114,115	00D2730460905	SEMI,CHIP TR/NPN 2SC KTC2875B(MB) 0.15W/LOW-ON-RES SOT23(RTK)-REEL		J5222875B0010S	2		
	Q116	00D9630066606	SEMI,CHIP TR/NPN 2SC KTC3875Y(ALY) 0.15W/SMT-REEL		J5223875Y0210S	1		
	Q512,513	963216500210P	SEMI,CHIP TR/NPN 2SC DTC143EKAT146 0.2W/SMT3-REEL		J5220143E0210S	2		
	ZD101	202450007501S	D,ZENER CHIP 0.2W 3.3V RD3.3S-T1-A(B2) SC-76		K06603R34P450S	1		
	ZD102	963202500710P	D,ZENER CHIP 0.2W 5.6V UDZ S SERIES (UMD2 TYPE)		K06605R64P400S	1		
	RESISTOR GROUP							
	R101,102	nsp	R,CHIP THICK 22-J,1/16W-1608REEL		C20002206M160S	2		
	R103-105	nsp	R,CHIP THICK 3.3K-J,1/16W-1608REEL		C20003326M160S	3		
	R106-109	nsp	R,CHIP THICK 0-J,1/16W-1608REEL		C20000006M160S	4		
	R110	nsp	R,CHIP THICK 1.8K-J,1/16W-1608REEL		C20001826M160S	1		
	R111	nsp	R,CHIP THICK 1.2K-J,1/16W-1608REEL		C20001226M160S	1		
	R112	nsp	R,CHIP THICK 1.8K-J,1/16W-1608REEL		C20001826M160S	1		
	R113	nsp	R,CHIP THICK 1.2K-J,1/16W-1608REEL		C20001226M160S	1		
	R114	nsp	R,CHIP THICK 4.7K-J,1/16W-1608REEL		C20004726M160S	1		
	R115,116	nsp	R,CHIP THICK 1.8K-J,1/16W-1608REEL		C20001826M160S	2		
	R117,118	nsp	R,CHIP THICK 1.2K-J,1/16W-1608REEL		C20001226M160S	2		
	R119-121	nsp	R,CHIP THICK 4.7K-J,1/16W-1608REEL		C20004726M160S	3		
	R122,123	nsp	R,CHIP THICK 1.8K-D,1/16W-1608REEL		C20001821M160S	2		
	R130,131	nsp	R,CHIP THICK 2.2K-J,1/16W-1608REEL		C20002226M160S	2		
	R132,133	nsp	R,CHIP THICK 4.3K-J,1/16W-1608REEL		C20004326M160S	2		
	R136,137	nsp	R,CHIP THICK 10K-D,1/16W-1608REEL		C20001031M161S	2		
	R138	nsp	R,CHIP THICK 19.1K-D,1/16W-1608REEL		C20019121M161S	1		
	R139	nsp	R,CHIP THICK 20K-D,1/16W-1608REEL		C20002031M161S	1		
	R140,141	nsp	R,CHIP THICK 10K-D,1/16W-1608REEL		C20001031M161S	2		
	R142,143	nsp	R,CHIP THICK 75-D,1/16W-1608REEL		C20007501M160S	2		
	R144,145	nsp	R,CHIP THICK 21K-D,1/16W-1608REEL		C20002131M161S	2		
	R146-148	nsp	R,CHIP THICK 47K-J,1/16W-1608REEL		C20004736M160S	3		
	R149	nsp	R,CHIP THICK 10K-D,1/16W-1608REEL		C20001031M161S	1		
	R150	nsp	R,CHIP THICK 21K-D,1/16W-1608REEL		C20002131M161S	1		
	R151	nsp	R,CHIP THICK 75-D,1/16W-1608REEL		C20007501M160S	1		
	R152	nsp	R,CHIP THICK 19.1K-D,1/16W-1608REEL		C20019121M161S	1		
	R153	nsp	R,CHIP THICK 10K-D,1/16W-1608REEL		C20001031M161S	1		
	R154	nsp	R,CHIP THICK 21K-D,1/16W-1608REEL		C20002131M161S	1		
	R155	nsp	R,CHIP THICK 10K-D,1/16W-1608REEL		C20001031M161S	1		
	R156	nsp	R,CHIP THICK 47K-J,1/16W-1608REEL		C20004736M160S	1		
	R157	nsp	R,CHIP THICK 75-D,1/16W-1608REEL		C20007501M160S	1		
	R158	nsp	R,CHIP THICK 10K-D,1/16W-1608REEL		C20001031M161S	1		
	R159	nsp	R,CHIP THICK 20K-D,1/16W-1608REEL		C20002031M161S	1		
	R160-163	nsp	R,CHIP THICK 1.2K-J,1/16W-1608REEL		C20001226M160S	4		
	R164-167	nsp	R,CHIP THICK 47K-J,1/16W-1608REEL		C20004736M160S	4		
	R168,169	nsp	R,CHIP THICK 2.2K-J,1/16W-1608REEL		C20002226M160S	2		
	R171,172	nsp	R,CHIP THICK 2.2K-J,1/16W-1608REEL		C20002226M160S	2		
	R174	nsp	R,CHIP THICK 2.7K-J,1/16W-1608REEL		C20002726M160S	1		
	R175,176	nsp	R,CHIP THICK 5.6K-J,1/16W-1608REEL		C20005626M160S	2		
	R177	nsp	R,CHIP THICK 2.7K-J,1/16W-1608REEL		C20002726M160S	1		
	R178,179	nsp	R,CHIP THICK 47K-J,1/16W-1608REEL		C20004736M160S	2		
	R180-183	nsp	R,CHIP THICK 150-J,1/16W-1608REEL		C20001516M160S	4		
	R184,185	nsp	R,CHIP THICK 10K-J,1/16W-1608REEL		C20001036M160S	2		
	R186	nsp	R,CHIP THICK 100K-J,1/16W-1608REEL		C20001046M160S	1		
	R187,188	nsp	R,CHIP THICK 22-J,1/16W-1608REEL		C20002206M160S	2		
	R189,190	nsp	R,CHIP THICK 100K-J,1/16W-1608REEL		C20001046M160S	2		
	R191	nsp	R,CHIP THICK 100-J,1/16W-1608REEL		C20001016M160S	1		
	R192-194	nsp	R,CHIP THICK 100K-J,1/16W-1608REEL		C20001046M160S	3		
	R197	nsp	R,CHIP THICK 100K-J,1/16W-1608REEL		C20001046M160S	1		
	R198	nsp	R,CHIP THICK 100-J,1/16W-1608REEL		C20001016M160S	1		
	R200	nsp	R,CHIP THICK 47-J,1/16W-1608REEL		C20004706M160S	1		
	R201	nsp	R,CHIP THICK 100-J,1/16W-1608REEL		C20001016M160S	1		
	R202,203	nsp	R,CHIP THICK 220-J,1/16W-1608REEL		C20002216M160S	2		
	R204-207	nsp	R,CHIP THICK 100-J,1/16W-1608REEL		C20001016M160S	4		
	R208	nsp	R,CHIP THICK 4.7K-J,1/16W-1608REEL		C20004726M160S	1		
	R209	nsp	R,CHIP THICK 1K-J,1/16W-1608REEL		C20001026M160S	1		
	R210	nsp	R,CHIP THICK 100K-J,1/16W-1608REEL		C20001046M160S	1		
	R211	nsp	R,CHIP THICK 22K-J,1/16W-1608REEL		C20002236M160S	1		
	R212	nsp	R,CHIP THICK 820-J,1/16W-1608REEL		C20008216M160S	1		
	R213	nsp	R,CHIP THICK 0-J,1/16W-1608REEL		C20000006M160S	1		
	R214	nsp	R,CHIP THICK 2.2K-J,1/4W-3216REEL		C2000222633015	1		
	R215	nsp	R,CHIP THICK 0-J,1/16W-1608REEL		C20000006M160S	1		
	R216	nsp	R,CHIP THICK 22-J,1/16W-1608REEL		C20002206M160S	1		
	R217,218	nsp	R,CHIP THICK 3.3K-J,1/16W-1608REEL		C20003326M160S	2		
	R219-221	nsp	R,CHIP THICK 1.8K-J,1/16W-1608REEL		C20001826M160S	3		
	R222	nsp	R,CHIP THICK 47K-J,1/16W-1608REEL		C20004736M160S	1		
	R223	nsp	R,CHIP THICK 4.7K-J,1/16W-1608REEL		C20004726M160S	1		
	R224	nsp	R,CHIP THICK 22-J,1/16W-1608REEL		C20002206M160S	1		
	R225-227	nsp	R,CHIP THICK 0-J,1/16W-1608REEL		C20000006M160S	3		
	R228	nsp	R,CHIP THICK 1.8K-J,1/16W-1608REEL		C20001826M160S	1		
	R229	nsp	R,CHIP THICK 4.7K-J,1/16W-1608REEL		C20004726M160S	1		
	R230,231	nsp	R,CHIP THICK 4.7K-D,1/16W-1608REEL		C20004721M161S	2		
	R232	nsp	R,CHIP THICK 47K-J,1/16W-1608REEL		C20004736M160S	1		
	R233	nsp	R,CHIP THICK 3.3K-J,1/16W-1608REEL		C20003326M160S	1		
	R234-237	nsp	R,CHIP THICK 1.2K-J,1/16W-1608REEL		C20001226M160S	4		
	R238	nsp	R,CHIP THICK 3.3K-J,1/16W-1608REEL		C20003326M160S	1		
	R239	nsp	R,CHIP THICK 2.7K-J,1/16W-1608REEL		C20002726M160S	1		
	R240,241	nsp	R,CHIP THICK 9.1K-J,1/16W-1608REEL		C20009126M160S	2		
	R242,243	nsp	R,CHIP THICK 10K-J,1/16W-1608REEL		C20001036M160S	2		
	R244	nsp	R,CHIP THICK 1M-J,1/16W-1608REEL		C20001056M160S	1		

	REF No.	Part No.	Part Name	Remarks		Q'ty	New	Ver
	R245,246	nsp	R,CHIP THICK 10K-J,1/16W-1608REEL		C20001036M160S	2		
	R247	nsp	R,CHIP THICK 2.7K-J,1/16W-1608REEL		C20002726M160S	1		
	R248	nsp	R,CHIP THICK 10K-J,1/16W-1608REEL		C20001036M160S	1		
	R249,250	nsp	R,CHIP THICK 22-J,1/16W-1608REEL		C20002206M160S	2		
	R251,252	nsp	R,CHIP THICK 33-J,1/16W-1608REEL		C20003306M160S	2		
	R253,254	nsp	R,CHIP THICK 10K-J,1/16W-1608REEL		C20001036M160S	2		
	R255,256	nsp	R,METAL FILM 100PPM 330-J,1W-R.REEL		C060033165050S	2		
	R257	nsp	R,CHIP THICK 0-J,1/16W-1608REEL		C20000006M160S	1		
	R258-261	nsp	R,CHIP THICK 2.2K-J,1/4W-3216REEL		C2000222633O1S	4		
	R262	nsp	R,CHIP THICK 100-J,1/16W-1608REEL		C20001016M160S	1		
	R263	nsp	R,CHIP THICK 1.8K-J,1/16W-1608REEL		C20001826M160S	1		
	R264	nsp	R,CHIP THICK 2.2K-J,1/16W-1608REEL		C20002226M160S	1		
	R265	nsp	R,CHIP THICK 68-J,1/16W-1608REEL		C20006806M160S	1		
	R266	nsp	R,CHIP THICK 220-J,1/16W-1608REEL		C20002216M160S	1		
	R267	nsp	R,CHIP THICK 56-J,1/16W-1608REEL		C20005606M160S	1		
	R268	nsp	R,CHIP THICK 100K-J,1/16W-1608REEL		C20001046M160S	1		
	R269	nsp	R,CHIP THICK 3.9K-J,1/16W-1608REEL		C20003926M160S	1		
	R270,271	nsp	R,CHIP THICK 10K-J,1/16W-1608REEL		C20001036M160S	2		
	R272	nsp	R,CHIP THICK 2.2K-J,1/4W-3216REEL		C2000222633O1S	1		
	R288,289	nsp	R,CHIP THICK 0-J,1/16W-1608REEL		C20000006M160S	2		
	R291	nsp	R,CHIP THICK 0-J,1/8W-3216REEL		C2000000613O0S	1		
	R584	nsp	R,CHIP THICK 270-J,1/16W-1608REEL		C20002716M160S	1		
	R585	nsp	R,CHIP THICK 1K-J,1/16W-1608REEL		C20001026M160S	1		
	RV1	963671100480P	VR,ROTARY RD901PF-20B6-30F-B10K		C45090100206OS	1		
	CAPACIITORS GROUP							
	C101	963134002740S	C,ELECT GE 85C 10UF-M/16V,5*11-5RE.SHL SY		D0401000831O0S	1		
	C102	nsp	C,CERAMIC CHIP HIK X7R0.1UF-K/50V-1608REEL		D0111045771605	1		
	C103	nsp	C,CERAMIC CHIP T.C X7R 0.01UF-K/50V-1608REEL		D0101037771605	1		
	C104	963134501900S	C,ELECT GE 85C 100UF-M/25V,6.3*11-5RE RA3-25V101MF3#8P-T2		D0401010842105	1		
	C106	00D2544574919	C,ELECT GE 85C 47UF-M/50V,6.3*11 RA3-50V470MF3#8P-T2 ELNA		D0404700873305	1		
	C107-110	nsp	C,CERAMIC CHIP HIK X7R0.1UF-K/50V-1608REEL		D0111045771605	4		
	C111	133050076506S	C,FILM COMBI PDFA182J250 1800PF-J/250V TAPPING REEL S&A		D02618206H050S	1		
	C112	nsp	C,CERAMIC CHIP T.C COG470PF-J/50V-1608REEL		D0104711671605	1		
	C114	133050076506S	C,FILM COMBI PDFA182J250 1800PF-J/250V TAPPING REEL S&A		D02618206H050S	1		
	C116-118	nsp	C,CERAMIC CHIP T.C COG470PF-J/50V-1608REEL		D0104711671605	3		
	C119	963134501900S	C,ELECT GE 85C 100UF-M/25V,6.3*11-5RE RA3-25V101MF3#8P-T2		D0401010842105	1		
	C120	nsp	C,CERAMIC CHIP HIK X7R0.1UF-K/50V-1608REEL		D0111045771605	1		
	C121	963134501900S	C,ELECT GE 85C 100UF-M/25V,6.3*11-5RE RA3-25V101MF3#8P-T2		D0401010842105	1		
	C122	nsp	C,CERAMIC CHIP HIK X7R0.1UF-K/50V-1608REEL		D0111045771605	1		
	C123,124	00D2544574919	C,ELECT GE 85C 47UF-M/50V,6.3*11 RA3-50V470MF3#8P-T2 ELNA		D0404700873305	2		
	C127,128	nsp	C,CERAMIC CHIP T.C COG22PF-J/50V-1608REEL		D0102201671605	2		
	C129	nsp	C,CERAMIC CHIP HIK X7R0.1UF-K/50V-1608REEL		D0111045771605	1		
	C130,131	963134501900S	C,ELECT GE 85C 100UF-M/25V,6.3*11-5RE RA3-25V101MF3#8P-T2		D0401010842105	2		
	C132	nsp	C,CERAMIC CHIP HIK X7R0.1UF-K/50V-1608REEL		D0111045771605	1		
	C133	00D2544574919	C,ELECT GE 85C 47UF-M/50V,6.3*11 RA3-50V470MF3#8P-T2 ELNA		D0404700873305	1		
	C134,135	nsp	C,CERAMIC CHIP T.C COG22PF-J/50V-1608REEL		D0102201671605	2		
	C136	00D2544569937	C,ELECT GE 85C 220UF-M/25V,8*11.5 RA3-25V221MG3#8P-T2 ELNA		D0402210843305	1		
	C137,138	nsp	C,CERAMIC CHIP HIK X7R0.1UF-K/50V-1608REEL		D0111045771605	2		
	C139	00D2544569937	C,ELECT GE 85C 220UF-M/25V,8*11.5 RA3-25V221MG3#8P-T2 ELNA		D0402210843305	1		
	C140	nsp	C,CERAMIC CHIP HIK X7R0.1UF-K/50V-1608REEL		D0111045771605	1		
	C141	00D2544569937	C,ELECT GE 85C 220UF-M/25V,8*11.5 RA3-25V221MG3#8P-T2 ELNA		D0402210843305	1		
	C142	00D2544574919	C,ELECT GE 85C 47UF-M/50V,6.3*11 RA3-50V470MF3#8P-T2 ELNA		D0404700873305	1		
	C143,144	nsp	C,CERAMIC CHIP T.C COG22PF-J/50V-1608REEL		D0102201671605	2		
	C145	nsp	C,CERAMIC CHIP HIK X7R0.1UF-K/50V-1608REEL		D0111045771605	1		
	C146-150	00D2544569937	C,ELECT GE 85C 220UF-M/25V,8*11.5 RA3-25V221MG3#8P-T2 ELNA		D0402210843305	5		
	C151-154	963134502400S	C,FILM POLYESTER MI-0.1UF-J/50V-5RE		D020104167050S	4		
	C155,156	nsp	C,CERAMIC CHIP HIK X7R0.1UF-K/50V-1608REEL		D0111045771605	2		
	C157	nsp	C,CERAMIC CHIP T.C COG330PF-J/50V-1608REEL		D0103311671605	1		
	C158	nsp	C,CERAMIC CHIP HIK X7R0.1UF-K/50V-1608REEL		D0111045771605	1		
	C159	nsp	C,CERAMIC CHIP T.C COG330PF-J/50V-1608REEL		D0103311671605	1		
	C160,161	nsp	C,CERAMIC CHIP HIK X7R0.1UF-K/50V-1608REEL		D0111045771605	2		
	C162	nsp	C,CERAMIC CHIP T.C COG330PF-J/50V-1608REEL		D0103311671605	1		
	C163	nsp	C,CERAMIC CHIP HIK X7R0.1UF-K/50V-1608REEL		D0111045771605	1		
	C164	nsp	C,CERAMIC CHIP T.C COG330PF-J/50V-1608REEL		D0103311671605	1		
	C165	nsp	C,CERAMIC CHIP T.C COG22PF-J/50V-1608REEL		D0102201671605	1		
	C166	00D2544574919	C,ELECT GE 85C 47UF-M/50V,6.3*11 RA3-50V470MF3#8P-T2 ELNA		D0404700873305	1		
	C167	nsp	C,CERAMIC CHIP HIK X7R0.1UF-K/50V-1608REEL		D0111045771605	1		
	C169	nsp	C,CERAMIC CHIP T.C COG22PF-J/50V-1608REEL		D0102201671605	1		
	C170	nsp	C,CERAMIC CHIP HIK X7R0.1UF-K/50V-1608REEL		D0111045771605	1		
	C172	00D2544574919	C,ELECT GE 85C 47UF-M/50V,6.3*11 RA3-50V470MF3#8P-T2 ELNA		D0404700873305	1		
	C173,174	nsp	C,CERAMIC CHIP T.C COG330PF-J/50V-1608REEL		D0103311671605	2		
	C175,176	nsp	C,CERAMIC CHIP HIK X7R0.1UF-K/50V-1608REEL		D0111045771605	2		
	C177-181	nsp	C,CERAMIC CHIP T.C COG47PF-J/50V-1608REEL		D0104701671605	5		
	C182,183	nsp	C,CERAMIC CHIP HIK X7R0.1UF-K/50V-1608REEL		D0111045771605	2		
	C184	00D9639005804	C,ELECT GE 85C 100UF-M/25V,6.3*11-5RE.SMS SY		D0401010840605	1		
	C185	nsp	C,CERAMIC CHIP T.C X7R 0.01UF-K/50V-1608REEL		D0101037771605	1		
	C186	00D2544577932	C,ELECT GE 85C 47UF-M/16V,5*11 RA3-16V470ME3#8P-T2 ELNA		D0404700833305	1		
	C187	963134501900S	C,ELECT GE 85C 100UF-M/25V,6.3*11-5RE RA3-25V101MF3#8P-T2		D0401010842105	1		
	C188	nsp	C,CERAMIC CHIP HIK X7R0.1UF-K/50V-1608REEL		D0111045771605	1		
	C189,190	963134502780P	C,ELECT GE 105C 470UF-M/35V,10*16 REEL LZ SAMWHA		D0414710850405	2	*	
	C191	nsp	C,CERAMIC CHIP HIK X7R0.1UF-K/50V-1608REEL		D0111045771605	1		
	C192	nsp	C,CERAMIC CHIP T.C X7R 0.01UF-K/50V-1608REEL		D0101037771605	1		
	C193	963134501900S	C,ELECT GE 85C 100UF-M/25V,6.3*11-5RE RA3-25V101MF3#8P-T2		D0401010842105	1		
	C194	nsp	C,CERAMIC CHIP HIK X7R0.1UF-K/50V-1608REEL		D0111045771605	1		
	C195	nsp	C,CERAMIC CHIP T.C COG470PF-J/50V-1608REEL		D0104711671605	1		
	C196	963134501900S	C,ELECT GE 85C 100UF-M/25V,6.3*11-5RE RA3-25V101MF3#8P-T2		D0401010842105	1		
	C197,198	nsp	C,CERAMIC CHIP HIK X7R0.1UF-K/50V-1608REEL		D0111045771605	2		
	C199,200	133050076506S	C,FILM COMBI PDFA182J250 1800PF-J/250V TAPPING REEL S&A		D02618206H050S	2		
	C201	nsp	C,CERAMIC CHIP T.C COG82PF-J/50V-1608REEL		D0108201671605	1		
	C202	nsp	C,CERAMIC CHIP T.C COG470PF-J/50V-1608REEL		D0104711671605	1		
	C203	963134501900S	C,ELECT GE 85C 100UF-M/25V,6.3*11-5RE RA3-25V101MF3#8P-T2		D0401010842105	1		
	C204	nsp	C,CERAMIC CHIP HIK X7R0.1UF-K/50V-1608REEL		D0111045771605	1		
	C205	963134002740S	C,ELECT GE 85C 10UF-M/16V,5*11-5RE.SHL SY		D0401000831O0S	1		
	C206,207	nsp	C,CERAMIC CHIP HIK X7R0.1UF-K/50V-1608REEL		D0111045771605	2		
	C208	nsp	C,CERAMIC CHIP T.C COG470PF-J/50V-1608REEL		D0104711671605	1		
	C210	963134501900S	C,ELECT GE 85C 100UF-M/25V,6.3*11-5RE RA3-25V101MF3#8P-T2		D0401010842105	1		
	C211	nsp	C,CERAMIC CHIP T.C COG470PF-J/50V-1608REEL		D0104711671605	1		
	C213	nsp	C,CERAMIC CHIP HIK X7R0.1UF-K/50V-1608REEL		D0111045771605	1		
	C215	00D9609009924	C,ELECT GE 85C 100UF-M/16V,6.3*11-5RE,SMS SY		D0401010830705	1		
	C216,217	00D2544574919	C,ELECT GE 85C 47UF-M/50V,6.3*11-5RE.SMS SY (Pb Free)		D0404700870705	2		
	C218,219	963134502770P	C,ELECT GE 105C 220UF-M/50V,10*16 5MM NXH SY		D0412210870205	2		
	C220	nsp	C,CERAMIC CHIP HIK X7R0.1UF-K/50V-1608REEL		D0111045771605	1		
	C221	963134501750S	C,ELECT GE 85C 220UF-M/25V,6*11(SHL TYPE) SY		D0402210846005	1		
	C222	nsp	C,CERAMIC CHIP HIK X7R0.1UF-K/50V-1608REEL		D0111045771605	1		
	C223	963134501750S	C,ELECT GE 85C 220UF-M/25V,6*11(SHL TYPE) SY		D0402210846005	1		
	C224	nsp	C,CERAMIC CHIP T.C COG82PF-J/50V-1608REEL		D0108201671605	1		
	C225,226	nsp	C,CERAMIC CHIP T.C COG)1000PF-J/50V-1608REEL GRM1885C1H102JA01D		D0101021671635	2		
	C227,228	963134502400S	C,FILM POLYESTER MI-0.1UF-J/50V-5RE		D020104167050S	2		
	C229,230	nsp	C,CERAMIC CHIP T.C COG)1000PF-J/50V-1608REEL GRM1885C1H102JA01D		D0101021671635	2		
	C231	nsp	C,CERAMIC CHIP HIK Y5V1UF-Z/50V-2012REEL		D0111055972005	1		
	C232	963134010980S	C,ELECT GE 85C 47UF-M/16V,5*7-5RE SRA SY		D0404700830605	1		
	C233	nsp	C,CERAMIC CHIP T.C COG)1000PF-J/50V-1608REEL GRM1885C1H102JA01D		D0101021671635	1		
	C234	00D9630293709	C,ELECT GE 85C 100UF-M/10V,5*11-5RE.SMS SY		D0401010820705	1		
	C235	nsp	C,CERAMIC CHIP HIK X7R0.1UF-K/50V-1608REEL		D0111045771605	1		
	C236	nsp	C,CERAMIC CHIP T.C X7R 0.01UF-K/50V-1608REEL		D0101037771605	1		
	C237	nsp	C,CERAMIC CHIP HIK X7R0.1UF-K/50V-1608REEL		D0111045771605	1		

	REF No.	Part No.	Part Name	Remarks		Q'ty	New	Ver
	C238	nsp	C,CERAMIC CHIP T.C X7R 0.01UF-K/50V-1608REEL		D010103777160S	1		
	C239	nsp	C,CERAMIC CHIP T.C COG)1000PF-J/50V-1608REEL GRM1885C1H102JA01D		D010102167163S	1		
	C240	00D2544573981	C,ELECT GE 85C 10UF-M/50V,5*11-5RE.SMS SY		D040100087070S	1		
	C241,242	nsp	C,CERAMIC CHIP T.C COG330PF-J/50V-1608REEL		D010331167160S	2		
	C245	nsp	C,CERAMIC CHIP T.C COG)1000PF-J/50V-1608REEL GRM1885C1H102JA01D		D010102167163S	1		
	C246	nsp	C,CERAMIC CHIP T.C X7R 0.01UF-K/50V-1608REEL		D010103777160S	1		
	C247-250	nsp	C,CERAMIC CHIP HIK X7R0.1UF-K/50V-1608REEL		D011104577160S	4		
	C251	nsp	C,CERAMIC CHIP T.C X7R 0.01UF-K/50V-1608REEL		D010103777160S	1		
	C252	nsp	C,CERAMIC CHIP T.C COG)1000PF-J/50V-1608REEL GRM1885C1H102JA01D		D010102167163S	1		
	C253	nsp	C,CERAMIC CHIP HIK X7R0.1UF-K/50V-1608REEL		D011104577160S	1		
	C254	nsp	C,CERAMIC CHIP HIK X7R0.01UF-K/50V-1608REEL		D011103777160S	1		
	C255	nsp	C,CERAMIC CHIP HIK X7R0.1UF-K/50V-1608REEL		D011104577160S	1		
	C256	nsp	C,CERAMIC CHIP T.C X7R 0.01UF-K/50V-1608REEL		D010103777160S	1		
	C271	nsp	C,CERAMIC CHIP HIK X7R0.1UF-K/50V-1608REEL		D011104577160S	1		
	C282-284	nsp	C,CERAMIC CHIP HIK X7R0.1UF-K/50V-1608REEL		D011104577160S	3		
	OTHER PARTS GROUP							
	★	nsp	TAPE DN700RCOPPER TAPE 15*7*T0.05/AUDIO		1220211649000S	3		
	BK101	nsp	BRACKET AVR133(HARMAN) BURRING HOLE SPTE 0.8t/SCREW		4010210196100S	1		
	CP101	nsp	CN.FPC 1.0MM 1.0-11-21P ST DIP		L130100112110S	1		
	CP104	nsp	CN.WAFER 2.0MM 20010WS-04A00 DIP4P STRAIGHT		L101200100410S	1		
	CP505	nsp	CN.FPC 1.0MM 1.0-16-10PB-2 10P ST SMT (JSY)		L130100161030S	1		
	CP506	nsp	CN.FPC 1.0MM 1.0-15S-7PWB 7P HOR SMT TOP		L130100150740S	1		
	CP507	nsp	CN.FPC 1.0MM 1.0-16-7PB-2 7P ST SMT (JSY)		L130100160730S	1		
	G104,105	nsp	TERMINAL MET37-0002/TAPIG EARTH FITTING		3790040886000S	2		
	JACK1	90M-YT004970R	JACK,D6.5 PHONE (YUQIU) D6.5 3P GOLD PJ-619AG		G402PJ619AG0YS	1		
	JK101FR JK101FR1 JK102FL	963643102340P	JACK,XLR XLR OUT (JY-5032A) JYE TAI PRECISION INDUSTRIAL		G411503201110S	3		
	JK102	90M-YT004640R	TER,RCA 2PIN RCA-207AE-02 NI(WH,RD)		G601207AE020YS	1		
	JK103	00D9630225706	TER,RCA 1PIN RCA-107A0(ORANGE)		G600107A0001YS	1		
	L101-105	nsp	COIL,BEAD BLM18AG121SN1D 120ohm SMD1608		D340160831211S	5		
	L106,107	nsp	R,CHIP THICK 0-J,1/10W-2012REEL		C200000060200S	2		
	LD501	963263100820P	LED,ROUND WEJ3290W-R1H0-BA 3PI RED/YELLOW GREEN BI-COLOR		K500032451110S	1		
	RL101	963682100390P	RELAY NA-5W-K 5V 2POLES-1 TO 2A FOR SIGNAL SWITCHING		G680500000010S	1		
	RL103	963682100390P	RELAY NA-5W-K 5V 2POLES-1 TO 2A FOR SIGNAL SWITCHING		G680500000010S	1		
	S520	00D9630045708	SW,TACT SKHV10920A,5MM/260G-REEL		G180000270010S	1		

REMOTE PCB ASS'Y

NOTE:The symbols in the column Remarks indicate the following destinations.
E3 : U.S.A. & Canada model E2 : Europe model E1C : China model E1 : Asia model JP : Japan model
BK : Black model SP : Premium Silver model

	REF No.	Part No.	Part Name	Remarks		Q'ty	New	Ver
	SEMICONDUCTORS GROUP							
	D3017	963204500320S	D,SCHOTTKY CHIP RB530VM-30 SOD-323 REEL SCHOTTKY BARRIER DIODE		K1255303055l0S	1	*	
	D3018	00D2760751901	D,RECTIFIER CHIP 1SR154-400 TE25(SMD)		K045154000000S	1		
	IC3001 IC3002	963234100240P	IC,LOGIC SN74LV245APW-EL2 TSSOP20		J040742451610S	2		
	IC3003	963243101920P	8952700000072 R5F101JCAFA DN700R&500R		8952700000072	1	*	
	IC3004	00MHC012137K0	IC,LOGIC SN74AHCT125PWR TSSOP14 TUBE QUADRUPLE BUS BUFFER		J040741250180S	1		
	IC3005	236810090504S	IC,LOGIC-INTERFACE ILX3232D 3V3 RS232 INTERFACE TRANSCEIVER SOP16		J046323200020S	1		
	Q3002-3007	00D2690192902	SEMI,CHIP TR/NPN 2SC KRC102S (NB) 0.2W/SOT-23 REEL		J522010200210S	6		
	U3001	963233100080S	IC,LOGIC SN74LVC1G06DBVR SOT23 SINGLE INVERTER		J040741060010S	1	*	
	RESISTOR GROUP							
	R3001-3011	nsp	R,CHIP THICK 22-J,1/16W-1608REEL		C20002206M160S	11		
	R3012-3027	nsp	R,CHIP THICK 1K-J,1/16W-1608REEL		C20001026M160S	16		
	R3028-3043	nsp	R,CHIP THICK 2.2K-J,1/16W-1608REEL		C20002226M160S	16		
	R3044-3048	nsp	R,CHIP THICK 22-J,1/16W-1608REEL		C20002206M160S	5		
	R3066,3067	nsp	R,CHIP THICK 0-J,1/16W-1608REEL		C20000006M160S	2		
	R3069,3070	nsp	R,CHIP THICK 0-J,1/16W-1608REEL		C20000006M160S	2		
	R3072	nsp	R,CHIP THICK 10K-J,1/16W-1608REEL		C20001036M160S	1		
	R3073,3074	nsp	R,CHIP THICK 0-J,1/16W-1608REEL		C20000006M160S	2		
	R3077-3085	nsp	R,CHIP THICK 10K-J,1/16W-1608REEL		C20001036M160S	9		
	R3086,3087	nsp	R,CHIP THICK 0-J,1/16W-1608REEL		C20000006M160S	2		
	R3088	nsp	R,CHIP THICK 47K-J,1/16W-1608REEL		C20004736M160S	1		
	R3089	nsp	R,CHIP THICK 10K-J,1/16W-1608REEL		C20001036M160S	1		
	R3096-3098	nsp	R,CHIP THICK 0-J,1/16W-1608REEL		C20000006M160S	3		
	R3099	nsp	R,CHIP THICK 47K-J,1/16W-1608REEL		C20004736M160S	1		
	R3102	nsp	R,CHIP THICK 10K-J,1/16W-1608REEL		C20001036M160S	1		
	R3103	nsp	R,CHIP THICK 0-J,1/16W-1608REEL		C20000006M160S	1		
	R3106,3107	nsp	R,CHIP THICK 47-J,1/16W-1608REEL		C20004706M160S	2		
	R3108	nsp	R,CHIP THICK 10K-J,1/16W-1608REEL		C20001036M160S	1		
	R3109	nsp	R,CHIP THICK 47-J,1/16W-1608REEL		C20004706M160S	1		
	R3110	nsp	R,CHIP THICK 22K-J,1/16W-1608REEL		C20002236M160S	1		
	R3119,3120	nsp	R,CHIP THICK 0-J,1/16W-1608REEL		C20000006M160S	2		
	R3124,3125	nsp	R,CHIP THICK 10K-J,1/16W-1608REEL		C20001036M160S	2		
	R3130	nsp	R,CHIP THICK 0-J,1/16W-1608REEL		C20000006M160S	1		
	R3131,3132	nsp	R,CHIP THICK 10K-J,1/16W-1608REEL		C20001036M160S	2		
	R3134	nsp	R,CHIP THICK 22K-J,1/16W-1608REEL		C20002236M160S	1		
	R3137	nsp	R,CHIP THICK 1K-J,1/16W-1608REEL		C20001026M160S	1		
	R3200-3203	nsp	R,CHIP THICK 1K-J,1/16W-1608REEL		C20001026M160S	4		
	R3204,3205	nsp	R,CHIP THICK 22-J,1/16W-1608REEL		C20002206M160S	2		
	R3207	nsp	R,CHIP THICK 1M-J,1/16W-1608REEL		C20001056M160S	1		
	CAPACIITORS GROUP							
	C1000	nsp	C,CERAMIC CHIP HIK Y5V0.01UF-Z/50V-1608REEL		D011103597160S	1		
	C3001-3016	nsp	C,CERAMIC CHIP T.C X7R 1000PF-K/50V-1608REEL		D010102777160S	16		
	C3018	963139500100P	C,DOUBLE LAYER(70) 0.47F-Z/5.5V,14.5*18,FG0H474ZF P=5MM NEC/TOKIN		D090474090050S	1	*	
	C3019,3020	nsp	C,CERAMIC CHIP T.C COG12PF-J/50V-1608REEL		D010120167160S	2		
	C3021	nsp	C,CERAMIC CHIP HIK Y5V 0.47uF-Z/10V-1608REEL		D011474792160S	1		
	C3022	nsp	C,CERAMIC CHIP HIK X7R0.1UF-K/50V-1608REEL		D011104577160S	1		
	C3023	nsp	C,CERAMIC CHIP HIK Y5V0.01UF-Z/50V-1608REEL		D011103597160S	1		
	C3024,3025	nsp	C,CERAMIC CHIP HIK X7R0.1UF-K/50V-1608REEL		D011104577160S	2		
	C3027	963134502340P	C,ELECT CHIP(GE) 100UF-M/10V,6.3*5.3 MVG 10VC100 SY		D050101082471S	1		
	C3028	nsp	C,CERAMIC CHIP HIK X7R0.1UF-K/50V-1608REEL		D011104577160S	1		
	C3029	963134502340P	C,ELECT CHIP(GE) 100UF-M/10V,6.3*5.3 MVG 10VC100 SY		D050101082471S	1		
	C3030	nsp	C,CERAMIC CHIP HIK X7R0.1UF-K/50V-1608REEL		D011104577160S	1		
	C3031	nsp	C,CERAMIC CHIP T.C X7R 1000PF-K/50V-1608REEL		D010102777160S	1		
	C3032	nsp	C,CERAMIC CHIP T.C COG100PF-J/50V-1608REEL		D010101167160S	1		
	C3033	nsp	C,CERAMIC CHIP HIK X7R0.1UF-K/50V-1608REEL		D011104577160S	1		
	C3034	nsp	C,CERAMIC CHIP HIK Y5V0.01UF-Z/50V-1608REEL		D011103597160S	1		
	C3035	nsp	C,CERAMIC CHIP T.C X7R 1000PF-K/50V-1608REEL		D010102777160S	1		
	C3036	963134502340P	C,ELECT CHIP(GE) 100UF-M/10V,6.3*5.3 MVG 10VC100 SY		D050101082471S	1		
	C3038	963134502340P	C,ELECT CHIP(GE) 100UF-M/10V,6.3*5.3 MVG 10VC100 SY		D050101082471S	1		
	C3039-3041	nsp	C,CERAMIC CHIP HIK X7R0.1UF-K/50V-1608REEL		D011104577160S	3		
	C3056,3057	nsp	C,CERAMIC CHIP T.C COG33PF-J/50V-1608REEL		D010330167160S	2		
	C3060	nsp	C,CERAMIC CHIP HIK Y5V0.01UF-Z/50V-1608REEL		D011103597160S	1		
	C3061	nsp	C,CERAMIC CHIP T.C X7R 1000PF-K/50V-1608REEL		D010102777160S	1		
	C3113	nsp	C,CERAMIC CHIP HIK X7R0.1UF-K/50V-1608REEL		D011104577160S	1		
	C3114	nsp	C,CERAMIC CHIP HIK Y5V0.01UF-Z/50V-1608REEL		D011103597160S	1		
	C3115	nsp	C,CERAMIC CHIP HIK X7R0.1UF-K/50V-1608REEL		D011104577160S	1		
	C3116	nsp	C,CERAMIC CHIP HIK Y5V0.01UF-Z/50V-1608REEL		D011103597160S	1		
	C3117	nsp	C,CERAMIC CHIP HIK X7R0.1UF-K/50V-1608REEL		D011104577160S	1		
	C3200	nsp	C,CERAMIC CHIP HIK X7R)0.047UF-K/25V-1608REEL		D011473774161S	1		
	C3201,3202	nsp	C,CERAMIC CHIP HIK Y5V0.33UF-Z/50V-2012REEL		D011334597200S	2		
	C3204	nsp	C,CERAMIC CHIP HIK Y5V0.33UF-Z/50V-2012REEL		D011334597200S	1		
	C3205	nsp	C,CERAMIC CHIP HIK X7R0.1UF-K/50V-1608REEL		D011104577160S	1		
	C3206	00D9630324801	C,ELECT CHIP(GE) 10UF-MVG/25V,4.3*5.1*5.3 REEL (Z8155) SY		D050100084200S	1		
	C3207-3212	nsp	C,CERAMIC CHIP T.C COG100PF-J/50V-1608REEL		D010101167160S	6		
	C3213	nsp	C,CERAMIC CHIP HIK X7R0.1UF-K/50V-1608REEL		D011104577160S	1		
	OTHER PARTS GROUP							
	CN1	nsp	CN.WAFER INTERFACE 25P D-SUB FEMALE DR25S 52.9*12.5 HWASUNG		L103250000020S	1		
	CP3001	nsp	CN.FPC 1.0MM 1.0-11-22P ST DIP		L130100112210S	1		
	CP3002	nsp	CN.FPC 1.0MM 1.0-11-12P ST DIP		L130100111210S	1		
	CP3004	nsp	CN.WAFER 2.0MM 20022WS-05C 5P STRAIGHT SMT		L101200220510S	1		
	JACK2	00D2051305008	CN.WAFER INTERFACE 9P FEMALE D-SUB DS03-09 ADD SCREW(4.8*11.8)BLACK		L103090090030S	1		
	L3001-3023	nsp	R,CHIP THICK 0-J,1/16W-1608REEL		C20000006M160S	23		
	X3001	963141101050S	CRYSTAL CHIP TFX-03(32.768KHZ) CL=7.0PF 2012REEL RIVER	new	E80532R768220S	1	*	
	Z3001	2598100015O7S	D,THERMISTOR NANOSMD-C075F-02 6V 100A 3216REEL THERMISTOR TYCO		K1300750200l0S	1		

INPUT PCB ASS'Y

NOTE:The symbols in the column Remarks indicate the following destinations.
E3 : U.S.A. & Canada model E2 : Europe model E1C : China model E1 : Asia model JP : Japan model
BK : Black model SP : Premium Silver model

	REF No.	Part No.	Part Name	Remarks		Q'ty	New	Ver
	SEMICONDUCTORS GROUP							
	D2001,2002	00D2760559909	D,SWITCHING CHIP DAP202KT146 SOT-346		K005020211460S	2		
	D2003,2004	00D2760560901	D,SWITCHING CHIP DAN202KT146 SOT-346		K005020201460S	2		
	D2007,2008	00M-HD201320R	D,SWITCHING CHIP 1SS355TE-17 (ROHM)		K0050355000020S	2		
	D2010	202450007501S	D,ZENER CHIP 0.2W 3.3V RD3.3S-T1-A(B2) SC-76		K06603R34P450S	1		
	D2011	963202500710P	D,ZENER CHIP 0.2W 5.6V UDZ S SERIES (UMD2 TYPE)		K06605R64P400S	1		
	D2012	00D2760560901	D,SWITCHING CHIP DAN202KT146 SOT-346		K005020201460S	1		
	D2013	00D2760559909	D,SWITCHING CHIP DAP202KT146 SOT-346		K005020211460S	1		
	D2014,2015	00M-HD201320R	D,SWITCHING CHIP 1SS355TE-17 (ROHM)		K0050355000020S	2		
	D2018	00D2760559909	D,SWITCHING CHIP DAP202KT146 SOT-346		K005020211460S	1		
	D2019	00D2760560901	D,SWITCHING CHIP DAN202KT146 SOT-346		K005020201460S	1		
	D7001,7002	2513100045075	D,ESD CHIP CG0603MLC-12LE ESD PROTECTOR-1608REEL		K067060305500S	2		
	D7003	9632020034905	D,ZENER CHIP 0.2W 6.2V UDZ S SERIES (UMD2 TYPE)		K06606R24P400S	1		
	D7004,7005	2513100045075	D,ESD CHIP CG0603MLC-12LE ESD PROTECTOR-1608REEL		K067060305500S	2		
	Q2007-2010	00MHX113121B0	SEMI,TR/GE PNP 2SA 2SA1312 SOT-23 AUDIO FREQUENCY LOW NOISE		J5001312000105	4		
	Q2027	90M-BA001650R	SEMI,CHIP TR/NPN 2SC KRC105S (NE) 0.2W/SOT-23 REEL		J5220105002105	1		
	Q2030	00D2690192902	SEMI,CHIP TR/NPN 2SC KRC102S (NB) 0.2W/SOT-23 REEL		J5220102002105	1		
	Q2031	00D2690184907	SEMI,CHIP TR/PNP 2SA KRA102S(PB) 0.2W/SOT-23 REEL		J5200102002105	1		
	Q2032	00D2690192902	SEMI,CHIP TR/NPN 2SC KRC102S (NB) 0.2W/SOT-23 REEL		J5220102002105	1		
	Q2033	963215500160P	SEMI,TR/GE NPN 2SD KTD863 TO-92L		J5030863000105	1		
	Q2034	00D2690184907	SEMI,CHIP TR/PNP 2SA KRA102S(PB) 0.2W/SOT-23 REEL		J5200102002105	1		
	Q2038,2039	00D2690192902	SEMI,CHIP TR/NPN 2SC KRC102S (NB) 0.2W/SOT-23 REEL		J5220102002105	2		
	U2009	00D2623069905	IC,ANALOG PCM1804DB 24BIT,192KHZ STREO A/D CONVERTER TSOP28		J0801804000105	1		
	U2012,2013	00D2630896909	IC,LINEAR OP NJM2068MD-SOP8P		J1212068000305	2		
	U2016	963232100390S	IC,LINEAR OP NJM8080G SOP8 DUAL OP AMP		J1218080000105	1		
	U2017,2018	00D2623555901	IC,LINEAR OP SA5532ADR SOIC8P		J1215532000505	2		
	U2022	00D2621953903	IC,LOGIC SN74LVC3GU04DCTR SSOP8P REEL TRIPLE INVERTER GATE		J0407404003205	1		
	U2023	963239101180P	IC,LOGIC UA9637ACD SOIC8 DUAL DIFFERENTIAL LINE RECEIVER		J0409637000105	1	*	
	U2024	963232100390S	IC,LINEAR OP NJM8080G SOP8 DUAL OP AMP		J1218080000105	1		
	U2025	00D2621953903	IC,LOGIC SN74LVC3GU04DCTR SSOP8P REEL TRIPLE INVERTER GATE		J0407404003205	1		
	RESISTOR GROUP							
	R2005	nsp	R,CHIP THICK 180-J,1/16W-1608REEL		C20001816M160S	1		
	R2006,2007	nsp	R,CHIP THICK 33-J,1/16W-1608REEL		C20003306M160S	2		
	R2008	nsp	R,CHIP THICK 0-J,1/10W-2012REEL		C2000000602005	1		
	R2017,2018	nsp	R,CHIP THICK 0-J,1/10W-2012REEL		C2000000602005	2		
	R2020	nsp	R,CHIP THICK 270K-J,1/16W-1608REEL		C20002746M160S	1		
	R2022	nsp	R,CHIP THICK 270K-J,1/16W-1608REEL		C20002746M160S	1		
	R2024	nsp	R,CHIP THICK 270K-J,1/16W-1608REEL		C20002746M160S	1		
	R2026	nsp	R,CHIP THICK 270K-J,1/16W-1608REEL		C20002746M160S	1		
	R2027,2028	nsp	R,CHIP THICK 0-J,1/16W-1608REEL		C20000006M160S	2		
	R2031,2032	nsp	R,CHIP THICK 10K-D,1/16W-1608REEL		C20001031M161S	2		
	R2042,2043	nsp	R,CHIP THICK 10-D,1/16W-1608REEL KAMAYA		C20001001M162S	2		
	R2045,2046	nsp	R,CHIP THICK 10-D,1/16W-1608REEL KAMAYA		C20001001M162S	2		
	R2049,2050	nsp	R,CHIP THICK 2.7K-D,1/16W-1608REEL		C20002721M161S	2		
	R2051,2052	nsp	R,CHIP THICK 3.3K-D,1/16W-1608REEL		C20003321M161S	2		
	R2059-2062	nsp	R,CHIP THICK 22K-D,1/16W-1608REEL		C20002231M161S	4		
	R2069,2070	nsp	R,CHIP THICK 4.7K-D,1/16W-1608REEL		C20004721M161S	2		
	R2071	nsp	R,CHIP THICK 2.2K-D,1/16W-1608REEL (00D2472035957)		C20002221M164S	1		
	R2072	nsp	R,CHIP THICK 8.2K-D,1/16W-1608REEL		C20008221M160S	1		
	R2075,2076	nsp	R,CHIP THICK 47K-D,1/16W-1608REEL		C20004731M161S	2		
	R2079,2080	nsp	R,CHIP THICK 47K-D,1/16W-1608REEL		C20004731M161S	2		
	R2087	nsp	R,CHIP THICK 100-D,1/16W-1608REEL		C20001011M161S	1		
	R2088	nsp	R,CHIP THICK 10K-D,1/16W-1608REEL		C20001031M161S	1		
	R2089	nsp	R,CHIP THICK 100-D,1/16W-1608REEL		C20001011M161S	1		
	R2090	nsp	R,CHIP THICK 10K-D,1/16W-1608REEL		C20001031M161S	1		
	R2091-2094	nsp	R,CHIP THICK 22K-D,1/16W-1608REEL		C20002231M161S	4		
	R2099,2100	nsp	R,CHIP THICK 10K-D,1/16W-1608REEL		C20001031M161S	2		
	R2101-2104	nsp	R,CHIP THICK 4.7K-D,1/16W-1608REEL		C20004721M161S	4		
	R2111-2114	nsp	R,CHIP THICK 3.3K-D,1/16W-1608REEL		C20003321M161S	4		
	R2118	nsp	R,CHIP THICK 3.3K-D,1/16W-1608REEL		C20003321M161S	1		
	R2120	nsp	R,CHIP THICK 3.3K-D,1/16W-1608REEL		C20003321M161S	1		
	R2122	nsp	R,CHIP THICK 3.3K-D,1/16W-1608REEL		C20003321M161S	1		
	R2124	nsp	R,CHIP THICK 3.3K-D,1/16W-1608REEL		C20003321M161S	1		
	R2139,2140	nsp	R,CHIP THICK 0-J,1/16W-1608REEL		C20000006M160S	2		
	R2144	nsp	R,CHIP THICK 47K-D,1/16W-1608REEL		C20004731M161S	1		
	R2146	nsp	R,CHIP THICK 47K-D,1/16W-1608REEL		C20004731M161S	1		
	R2148	nsp	R,CHIP THICK 3.3K-D,1/16W-1608REEL		C20003321M161S	1		
	R2150	nsp	R,CHIP THICK 3.3K-D,1/16W-1608REEL		C20003321M161S	1		
	R2152,2153	nsp	R,CHIP THICK 3.3K-D,1/16W-1608REEL		C20003321M161S	2		
	R2156,2157	nsp	R,CHIP THICK 3.3K-D,1/16W-1608REEL		C20003321M161S	2		
	R2160	nsp	R,CHIP THICK 0-J,1/16W-1608REEL		C20000006M160S	1		
	R2161	nsp	R,CHIP THICK 680-D,1/16W-1608REEL		C20006811M160S	1		
	R2163	nsp	R,CHIP THICK 47K-D,1/16W-1608REEL		C20004731M161S	1		
	R2165	nsp	R,CHIP THICK 3.3K-D,1/16W-1608REEL		C20003321M161S	1		
	R2167	nsp	R,CHIP THICK 0-J,1/16W-1608REEL		C20000006M160S	1		
	R2168	nsp	R,CHIP THICK 3.3K-D,1/16W-1608REEL		C20003321M161S	1		
	R2170	nsp	R,CHIP THICK 2.2K-D,1/16W-1608REEL (00D2472035957)		C20002221M164S	1		
	R2172	nsp	R,CHIP THICK 8.2K-D,1/16W-1608REEL		C20008221M160S	1		
	R2173	nsp	R,CHIP THICK 680-D,1/16W-1608REEL		C20006811M160S	1		
	R2175	nsp	R,CHIP THICK 680-D,1/16W-1608REEL		C20006811M160S	1		
	R2177	nsp	R,CHIP THICK 680-D,1/16W-1608REEL		C20006811M160S	1		
	R2180	00D2472032976	R,CHIP THICK 150-D,1/16W-1608REEL		C20001511M160S	1		
	R2183	00D2472032976	R,CHIP THICK 150-D,1/16W-1608REEL		C20001511M160S	1		
	R2185	nsp	R,CHIP THICK 47K-D,1/16W-1608REEL		C20004731M161S	1		
	R2188	nsp	R,CHIP THICK 100K-J,1/16W-1608REEL		C20001046M160S	1		
	R2190	nsp	R,CHIP THICK 0-J,1/16W-1608REEL		C20000006M160S	1		
	R2193	nsp	R,CHIP THICK 0-J,1/16W-1608REEL		C20000006M160S	1		
	R2194	nsp	R,CHIP THICK 22-J,1/16W-1608REEL		C20002206M160S	1		
	R2198	nsp	R,CHIP THICK 0-J,1/16W-1608REEL		C20000006M160S	1		
	R2199-2202	nsp	R,CHIP THICK 100-J,1/16W-1608REEL		C20001016M160S	4		
	R2203,2204	nsp	R,CHIP THICK 0-J,1/16W-1608REEL		C20000006M160S	2		
	R2205	nsp	R,CHIP THICK 10K-J,1/16W-1608REEL		C20001036M160S	1		
	R2206	nsp	R,CHIP THICK 100K-J,1/16W-1608REEL		C20001046M160S	1		
	R2207	nsp	R,CHIP THICK 1K-J,1/16W-1608REEL		C20001026M160S	1		
	R2208,2209	nsp	R,CHIP THICK 220-J,1/16W-1608REEL		C20002216M160S	2		
	R2210-2212	nsp	R,CHIP THICK 100K-J,1/16W-1608REEL		C20001046M160S	3		
	R2213	nsp	R,CHIP THICK 0-J,1/16W-1608REEL		C20000006M160S	1		
	R2214	nsp	R,CHIP THICK 2.2K-J,1/4W-3216REEL		C200022263301S	1		
	R2215	nsp	R,CHIP THICK 100K-J,1/16W-1608REEL		C20001046M160S	1		
	R2222	nsp	R,METAL FILM 100PPM 470-J,1W-R.REEL		C060047165050S	1		
	R2224	nsp	R,CHIP THICK 100-J,1/16W-1608REEL		C20001016M160S	1		
	R2225	nsp	R,CHIP THICK 100K-J,1/16W-1608REEL		C20001046M160S	1		
	R2227,2228	nsp	R,CHIP THICK 100K-J,1/16W-1608REEL		C20001046M160S	2		
	R2230-2233	nsp	R,CHIP THICK 47K-D,1/16W-1608REEL		C20004731M161S	4		
	R2243	nsp	R,CHIP THICK 15K-J,1/16W-1608REEL		C20001536M160S	1		

	REF No.	Part No.	Part Name	Remarks		Q'ty	New	Ver
	R2244,2245	nsp	R,CHIP THICK 1.5K-D,1/16W-1608REEL		C20001521M161S	2		
	R2252,2253	nsp	R,CHIP THICK 0-J,1/16W-1608REEL		C20000006M160S	2		
	R2254	nsp	R,CHIP THICK 75-J,1/16W-1608REEL		C20007506M160S	1		
	R2255	nsp	R,CHIP THICK 1M-J,1/16W-1608REEL		C20001056M160S	1		
	R2256,2257	nsp	R,CHIP THICK 220-J,1/16W-1608REEL		C20002216M160S	2		
	R2258	nsp	R,CHIP THICK 100-J,1/16W-1608REEL		C20001016M160S	1		
	R2259	nsp	R,CHIP THICK 2.2K-J,1/16W-1608REEL		C20002226M160S	1		
	R2260	nsp	R,CHIP THICK 220-J,1/16W-1608REEL		C20002216M160S	1		
	R6009	nsp	R,CHIP THICK 0-J,1/10W-2012REEL		C2000000060200S	1		
	CAPACIITORS GROUP							
	C2002	nsp	C,CERAMIC CHIP HIK Y5V0.1UF-Z/50V-1608REEL		D011104597160S	1		
	C2004	nsp	C,CERAMIC CHIP HIK Y5V0.1UF-Z/50V-1608REEL		D011104597160S	1		
	C2009,2010	nsp	C,CERAMIC CHIP T.C COG330PF-J/50V-1608REEL		D010331167160S	2		
	C2013,2014	9631345027905	C,ELECT GE 85C 47UF-M/100V,10*12.5		D04047008C130S	2	*	
	C2015	nsp	C,CERAMIC CHIP HIK Y5V0.1UF-Z/50V-1608REEL		D011104597160S	1		
	C2016,2017	9631345027905	C,ELECT GE 85C 47UF-M/100V,10*12.5		D04047008C130S	2	*	
	C2018	nsp	C,CERAMIC CHIP HIK Y5V0.1UF-Z/50V-1608REEL		D011104597160S	1		
	C2019,2020	nsp	C,CERAMIC CHIP T.C COG22PF-J/50V-1608REEL		D010220167160S	2		
	C2021,2022	nsp	C,CERAMIC CHIP HIK X7R)0.1UF-K/25V-1608REEL		D011104774161S	2		
	C2023,2024	00D2544574919	C,ELECT GE 85C 47UF-M/50V,6.3*11 RA3-50V470MF3#8P-T2 ELNA		D040470087330S	2		
	C2025-2028	nsp	C,CERAMIC CHIP HIK X7R1000PF-K/50V-1608REEL		D011102777160S	4		
	C2029,2030	9631345024005	C,FILM POLYESTER MI-0.1UF-J/50V-5RE		D020104167050S	2		
	C2031,2032	9631345028005	C,ELECT GE 85C 1000UF-M/6.3V,10*12.5S-5RE,SMS SY		D040102081050S	2	*	
	C2033,2034	nsp	C,CERAMIC CHIP HIK X5R)10UF-K/16V-2012REEL GRM21BR61C106KE15L		D011106573200S	2		
	C2035	nsp	C,CERAMIC CHIP HIK X7R)0.1UF-K/25V-1608REEL		D011104774161S	1		
	C2036	nsp	C,CERAMIC CHIP HIK X5R)10UF-K/16V-2012REEL GRM21BR61C106KE15L		D011106573200S	1		
	C2037	nsp	C,CERAMIC CHIP HIK X7R)0.1UF-K/25V-1608REEL		D011104774161S	1		
	C2038	nsp	C,CERAMIC CHIP HIK X5R)10UF-K/16V-2012REEL GRM21BR61C106KE15L		D011106573200S	1		
	C2041-2044	nsp	C,CERAMIC CHIP T.C COG22PF-J/50V-1608REEL		D010220167160S	4		
	C2045-2048	nsp	C,CERAMIC CHIP HIK X7R)0.1UF-K/25V-1608REEL		D011104774161S	4		
	C2051-2054	00D2544574919	C,ELECT GE 85C 47UF-M/50V,6.3*11 RA3-50V470MF3#8P-T2 ELNA		D040470087330S	4		
	C2055,2056	nsp	C,CERAMIC CHIP HIK X7R)0.1UF-K/25V-1608REEL		D011104774161S	2		
	C2057,2058	nsp	C,CERAMIC CHIP T.C COG22PF-J/50V-1608REEL		D010220167160S	2		
	C2064	00D2544574919	C,ELECT GE 85C 47UF-M/50V,6.3*11 RA3-50V470MF3#8P-T2 ELNA		D040470087330S	1		
	C2066	00D2544574919	C,ELECT GE 85C 47UF-M/50V,6.3*11 RA3-50V470MF3#8P-T2 ELNA		D040470087330S	1		
	C2068,2069	nsp	C,CERAMIC CHIP HIK X7R)0.1UF-K/25V-1608REEL		D011104774161S	2		
	C2074,2075	nsp	C,CERAMIC CHIP HIK X7R1000PF-K/50V-1608REEL		D011102777160S	2		
	C2076	nsp	C,CERAMIC CHIP HIK Y5V0.1UF-Z/50V-1608REEL		D011104597160S	1		
	C2077	nsp	C,CERAMIC CHIP T.C COG22PF-J/50V-1608REEL		D010220167160S	1		
	C2079	nsp	C,CERAMIC CHIP HIK Y5V0.1UF-Z/50V-1608REEL		D011104597160S	1		
	C2080	nsp	C,CERAMIC CHIP T.C COG22PF-J/50V-1608REEL		D010220167160S	1		
	C2082	00D2544569937	C,ELECT GE 85C 220UF-M/25V,8*11.5 RA3-25V221MG3#8P-T2 ELNA		D040221084330S	1		
	C2084	nsp	C,CERAMIC CHIP HIK X7R)0.1UF-K/25V-1608REEL		D011104774161S	1		
	C2087	nsp	C,CERAMIC CHIP T.C COG22PF-J/50V-1608REEL		D010220167160S	1		
	C2089	nsp	C,CERAMIC CHIP T.C COG22PF-J/50V-1608REEL		D010220167160S	1		
	C2091	nsp	C,CERAMIC CHIP HIK X7R1000PF-K/50V-1608REEL		D011102777160S	1		
	C2093	nsp	C,CERAMIC CHIP HIK X7R1000PF-K/50V-1608REEL		D011102777160S	1		
	C2095	00D2544569937	C,ELECT GE 85C 220UF-M/25V,8*11.5 RA3-25V221MG3#8P-T2 ELNA		D040221084330S	1		
	C2096	nsp	C,CERAMIC CHIP HIK X7R)0.1UF-K/25V-1608REEL		D011104774161S	1		
	C2100,2101	nsp	C,CERAMIC CHIP HIK X7R)0.1UF-K/25V-1608REEL		D011104774161S	2		
	C2105,2106	00D2544574919	C,ELECT GE 85C 47UF-M/50V,6.3*11 RA3-50V470MF3#8P-T2 ELNA		D040470087330S	2		
	C2109	nsp	C,CERAMIC CHIP HIK X7R)0.1UF-K/25V-1608REEL		D011104774161S	1		
	C2111	00D2544574919	C,ELECT GE 85C 47UF-M/50V,6.3*11 RA3-50V470MF3#8P-T2 ELNA		D040470087330S	1		
	C2113	nsp	C,CERAMIC CHIP HIK X7R)0.1UF-K/25V-1608REEL		D011104774161S	1		
	C2116	9631345023705	C,ELECT GE 85C 47UF-M/16V,5*11-5RE.SMS SY		D040470083080S	1		
	C2117,2118	nsp	C,CERAMIC CHIP T.C COG47PF-J/50V-1608REEL		D010470167160S	2		
	C2119	nsp	C,CERAMIC CHIP HIK X7R0.01UF-K/50V-1608REEL		D011103777160S	1		
	C2120	nsp	C,CERAMIC CHIP T.C COG47PF-J/50V-1608REEL		D010470167160S	1		
	C2121	00D2544577932	C,ELECT GE 85C 47UF-M/25V,5*11 RA3-25V470ME3#8P-T2 ELNA		D040470084330S	1		
	C2122	nsp	C,CERAMIC CHIP HIK X7R0.01UF-K/50V-1608REEL		D011103777160S	1		
	C2124	9631345023705	C,ELECT GE 85C 47UF-M/16V,5*11-5RE.SMS SY		D040470083080S	1		
	C2125	nsp	C,CERAMIC CHIP HIK X7R)0.1UF-K/25V-1608REEL		D011104774161S	1		
	C2126	nsp	C,CERAMIC CHIP T.C COG47PF-J/50V-1608REEL		D010470167160S	1		
	C2128	nsp	C,CERAMIC CHIP HIK X7R1000PF-K/50V-1608REEL		D011102777160S	1		
	C2129	nsp	C,CERAMIC CHIP HIK X7R0.01UF-K/50V-1608REEL		D011103777160S	1		
	C2130	nsp	C,CERAMIC CHIP HIK X7R1000PF-K/50V-1608REEL		D011102777160S	1		
	C2131	nsp	C,CERAMIC CHIP HIK X7R0.01UF-K/50V-1608REEL		D011103777160S	1		
	C2133,2134	nsp	C,CERAMIC CHIP HIK X7R)0.1UF-K/25V-1608REEL		D011104774161S	2		
	C2135,2136	9631345027805	C,ELECT GE 105C 470UF-M/35V,10*16 REEL LZ SAMWHA		D041471085040S	2	*	
	C2138,2139	nsp	C,CERAMIC CHIP HIK X7R)0.1UF-K/25V-1608REEL		D011104774161S	2		
	C2143,2144	00D2544569937	C,ELECT GE 85C 220UF-M/25V,8*11.5 RA3-25V221MG3#8P-T2 ELNA		D040221084330S	2		
	C2145,2146	nsp	C,CERAMIC CHIP T.C COG22PF-J/50V-1608REEL		D010220167160S	2		
	C2147,2148	00D2544574919	C,ELECT GE 85C 47UF-M/50V,6.3*11 RA3-50V470MF3#8P-T2 ELNA		D040470087330S	2		
	C2152	nsp	C,CERAMIC CHIP T.C COG47PF-J/50V-1608REEL		D010470167160S	1		
	C2153	nsp	C,CERAMIC CHIP HIK Y5V0.1UF-Z/50V-1608REEL		D011104597160S	1		
	C2154	nsp	C,CERAMIC CHIP T.C COG47PF-J/50V-1608REEL		D010470167160S	1		
	C2155	nsp	C,CERAMIC CHIP HIK Y5V0.1UF-Z/50V-1608REEL		D011104597160S	1		
	C2157	9631345023605	C,ELECT GE 85C 47UF-M/63V,8*11.5-5RE,SMS-SY		D040470088060S	1		
	C2158	nsp	C,CERAMIC CHIP HIK X7R)0.1UF-K/25V-1608REEL		D011104774161S	1		
	C2169	nsp	C,CERAMIC CHIP HIK X7R1000PF-K/50V-1608REEL		D011102777160S	1		
	C2170	nsp	C,CERAMIC CHIP HIK X7R0.01UF-K/50V-1608REEL		D011103777160S	1		
	C2171,2172	nsp	C,CERAMIC CHIP HIK X7R)0.1UF-K/25V-1608REEL		D011104774161S	2		
	C2175	nsp	C,CERAMIC CHIP HIK X7R0.01UF-K/50V-1608REEL		D011103777160S	1		
	C2177	nsp	C,CERAMIC CHIP HIK X7R0.01UF-K/50V-1608REEL		D011103777160S	1		
	C2178	nsp	C,CERAMIC CHIP HIK X7R1000PF-K/50V-1608REEL		D011102777160S	1		
	C2560,2561	nsp	C,CERAMIC CHIP HIK Y5V0.1UF-Z/50V-1608REEL		D011104597160S	2		
	OTHER PARTS GROUP							
	B2001	nsp	BRACKET AVR133(HARMAN) BURRING HOLE SPTE 0.8t/SCREW		4010210196100S	1		
	B2002,2003	nsp	TERMINAL MET37-0002/TAPIG EARTH FITTING		3790040886000S	2		
	K2001	963643102710S	JACK,XLR JY-5033U*030		G411JY5033U0JS	1	*	
	K2002	90M-YT004640R	TER,RCA 2PIN RCA-207AE-02 NI(WH,RD)		G601207AE020YS	1		
	K2003,2004	963643102710S	JACK,XLR JY-5033U*030		G411JY5033U0JS	2	*	
	K2005	00D9630225706	TER,RCA 1PIN RCA-107A0(ORANGE)		G600107A0001YS	1		
	L2001	nsp	COIL,BEAD BLM18AG121SN1D 120ohm SMD1608		D3401608312115	1		
	N2001	nsp	CN.FPC 1.0MM 1.0-11-20P ST DIP		L13010011201OS	1		
	N2002	nsp	CN.WAFER 2.0MM 20010WS-04A00 DIP4P STRAIGHT		L101200100410S	1		
	N7001	nsp	CN.FPC 1.0MM 1.0-9-9PW 6P AN DIP TOP CONTACT		L13010009065OS	1		
	N7002	963644101850P	CN,PLUG CONTACT USB DIP U25F0FD004S117BY YUQIU		G4802500455105	1	*	
	S2003	963682100390P	RELAY NA-5W-K 5V 2POLES-1 TO 2A FOR SIGNAL SWITCHING		G6805000000105	1		

EXPLODED

NOTE:The symbols in the column Remarks indicate the following destinations.
E3 : U.S.A. & Canada model E2 : Europe model E1C : China model E1 : Asia model JP : Japan model
BK : Black model SP : Premium Silver model

	REF No.	Part No.	Part Name	Remarks		Q'ty	New	Ver
	P1	963633101470P	7025HU1302010(DN500R MAIN PCB ASSY)		7025HU1302010	1	*	
	P2	963632101530P	7025HU1302011(DN500R PANEL PCB ASSY)		7025HU1302011	1	*	2
	★	963632101550P	7025HU1302012(DN500R AUDIO PCB ASSY)		7025HU1302012	1	*	
	P3	—	AUDIO		7028072841030	1		
	P4	—	HP		7028072844030	1		
	P5	—	PWR_KEY		7028072845030	1		
	P6	963632101510P	7025HU1302013(DN700R/500R RMT PCB ASSY)		7025HU1302013	1	*	2
	★	963632101540P	7025HU1302014(DN500R INPUT PCB ASSY)		7025HU1302014	1	*	
	P7	—	INPUT		7028073521020	1		
	P9	—	USB		7028073523020	1		
!	P10	963694100120P	8208001020020S POWER TRANS ASSY MRX205A		8208001020020S	1	*	
	1	963416101160P	WINDOW STANDBY		5077213563010S	1		
	2	nsp	BRACKET SIDE		4010215946000S	1		
	3	963402104200P	PANEL FRONT		3067216061000S	1	*	
	4	963411101730P	BUTTON STANDBY		5090214901000S	1		
	5-1	963411102940P	BUTTON 12KEY-5K		5098215251D10	1		
	5-2		BUTTON 12KEY-7K			1	*	
	6	nsp	SHEET BUTTON L		1210212209000S	1		
	7	963415100420P	DOOR SD		5040210751000S	1	*	
	8	nsp	RIVET		1560210051000S	1		
	9-1	nsp	SHAFT DOOR		2400210086000S	1	*	
	9-2	nsp	SHAFT DOOR2		2400210106000S	1	*	
	10	963411102930P	BUTTON 5KEY		5097215261110S	1	*	
	11	nsp	SHEET BUTTON S		1210212219000S	1		
	12	963412101030P	KNOB JOG		5087212311100S	1		
	13	963416101190P	WINDOW OLED		5077213592010S	1	*	
	14	963423100330P	LENS RING		3710211313000S	1		
	15	963412100700P	KNOB HP VOL		5080212601000S	1		
	16	nsp	BRACKET HP VOL		4010215756000S	1		
	17	nsp	GUIDE PIN		4350210511000S	1	*	
	18	nsp	NUT HP		1520210386000S	1		
	19	nsp	SHEET OLED		1210212179000S	1		
	20	nsp	SHIELD OLED		3070210666000S	1		
	21	nsp	HOLDER OLED		4320211121000S	1		
	22	nsp	WASHER		1530210382000S	4		
	23	nsp	DOUBLE TAPE		A710000510000S	0.15		
	24	nsp	DOUBLE TAPE		A710000250010S	0.05		
	25	nsp	CHASSIS MAIN		3207214726100S	1	*	
	26	00D9600240805	FOOT		4000210131000S	4		
	27	90M01CW056010	CUSHION FOOT		4050210615300S	4		
	28	nsp	BRACKET TOP COVER		4010215936000S	1		
	29	nsp	CUSHION SIDE		4050214905000S	1	*	
	30	nsp	SHEET SMPS		1210212442000S	1	*	
!	31	90MYT004530R	AC INLET		G430040560010S	1	*	
	32	nsp	WASHER		B300043106P00S	1		
	33	nsp	SPACER CARD		4300210062000S	2		
	34	nsp	CLAMP MTG		4330000310000S	3		
	35	nsp	ACETATE TAPE(15*60)		1220210059010S	6		
	36	nsp	SHEET EMI		1210212359000S	1		
	38	nsp	PLATE HP VOL		4470212776000S	1		
	39	nsp	ACETATE TAPE(25*60)		1220211549000S	1		
	40	nsp	ACETATE TAPE(25*110)		1220211599000S	1		
	41	963403100820P	CABINET TOP		3007212016100S	1		
	42	963444103220P	BRACKET RACK		4017215876010S	2		
	43	nsp	ACETATE TAPE(10*60)		1220211469000S	1		
	SCREW							
	A	nsp	SCREW(+2S 3X8 BK/BH)		B020030083B10S	25		
	B	nsp	SCREW(+2S 3X10 BK/PH)		B010230103P10S	24		
	C	nsp	SCREW(+2S 3X10 DOT BK/BH)		B020030103B11S	22		
	D	nsp	SCREW(+2S 3X8 BK/FH)		B020030083F10S	7		
	E	nsp	SCREW(4PI SPRING-WASHER)		B028940101B10S	1		
	F	nsp	SCREW(+2S P-TITE 2X8 BK/BH)		B020820083B10S	6		
	LABEL							
	L1	nsp	LABEL GROUND		5527042410240S	1		
	L2	nsp	LABEL SAFETY		5507000014060S	1	*	
	L3	nsp	LABEL VER		5527000000310S	1		
	FFC							
	F1	963606501860P	FFC 7P		N7110712124805	1		
	F2	963606501870P	FFC 10P		N7111028124805	1		
	F3	963606502300P	FFC 6P		N7110613124805	1		
	F4	963606502310P	FFC 19P		N7131916124905	1		
	F5	963606502320P	FFC 21P		N7112124224905	1		
	F6	963606502330P	FFC 20P		N7112031124905	1		
	F7	963606502340P	FFC 22P		N7112245124905	1		
	F8	963606502350P	FFC 12P		N7111224124905	1		
	WIRE							
!	W2	nsp	RING TER WIRE		8410600010130S	1		
!	W3	nsp	WIRE 2P		L000900020140S	1	*	
	W4	nsp	WIRE 4P		L002181040140S	1		
	W5	nsp	WIRE 5P		L002181050060S	1		
	W6	nsp	WIRE 4P		L002341040030S	1		
	W7	nsp	RING TER WIRE		8410131010070S	1		

PACKING

NOTE:The symbols in the column Remarks indicate the following destinations.
E3 : U.S.A. & Canada model E2 : Europe model E1C : China model E1 : Asia model JP : Japan model
BK : Black model SP : Premium Silver model

	REF No.	Part No.	Part Name	Remarks		Q'ty	New	Ver
	1	-	DN500REM			1		
	2	nsp	PE SHEET		6327040059000S	1		
	3	nsp	POLY BAG	EM	6337000240010S	2		
	3	nsp	POLY BAG	JP	6337000240010S	1		
	4	nsp	PAD		6240215020000S	1		
	5	963531104060P	BOX GIFT		6007212450010S	1	*	
	7	963533101650P	CUSHION SNOW		6230213354000S	1		
!	8	963611500490S	CORD ASSY(E3)	EM	L068125101820S	1		
!	9	963611500500S	CORD ASSY(E2)	EM	L068250161820S	1		
!	10	963611500740P	CORD ASSY(JP)	JP	L068125127000S	1		
!	12	00MYP04000830	CN WAFER / KPR-24 3P-IN 2P-OUT POWER ADAPTOR FOR JP	JP	L109240000010S	1		
	13	nsp	LABEL CONTROL(SHIPPING)		5507000014070S	1		
	13	nsp	LABEL CONTROL(SHIPPING)	JP	5507000014080S	1		
	15	54111112000AP	GETTING STARTED (EM) MANUAL		5707000008630S	1	*	
	16	35201027200AP	INST. MANUAL(CD-ROM. EM) DISC CD-ROM		6517000001590S	1	*	
	20	nsp	POLABAG JP CODE	JP	6330210532000S	1		
	21	nsp	POLABAG ACCESSORY		6330210532000S	1		
	22	nsp	SCREW		B000030103B10S	2		