DENON

Hi Fi Component

SERVICE MANUAL

SERVO-CONTROLLED DIRECT DRIVE TURNTABLE

MODEL DP-75

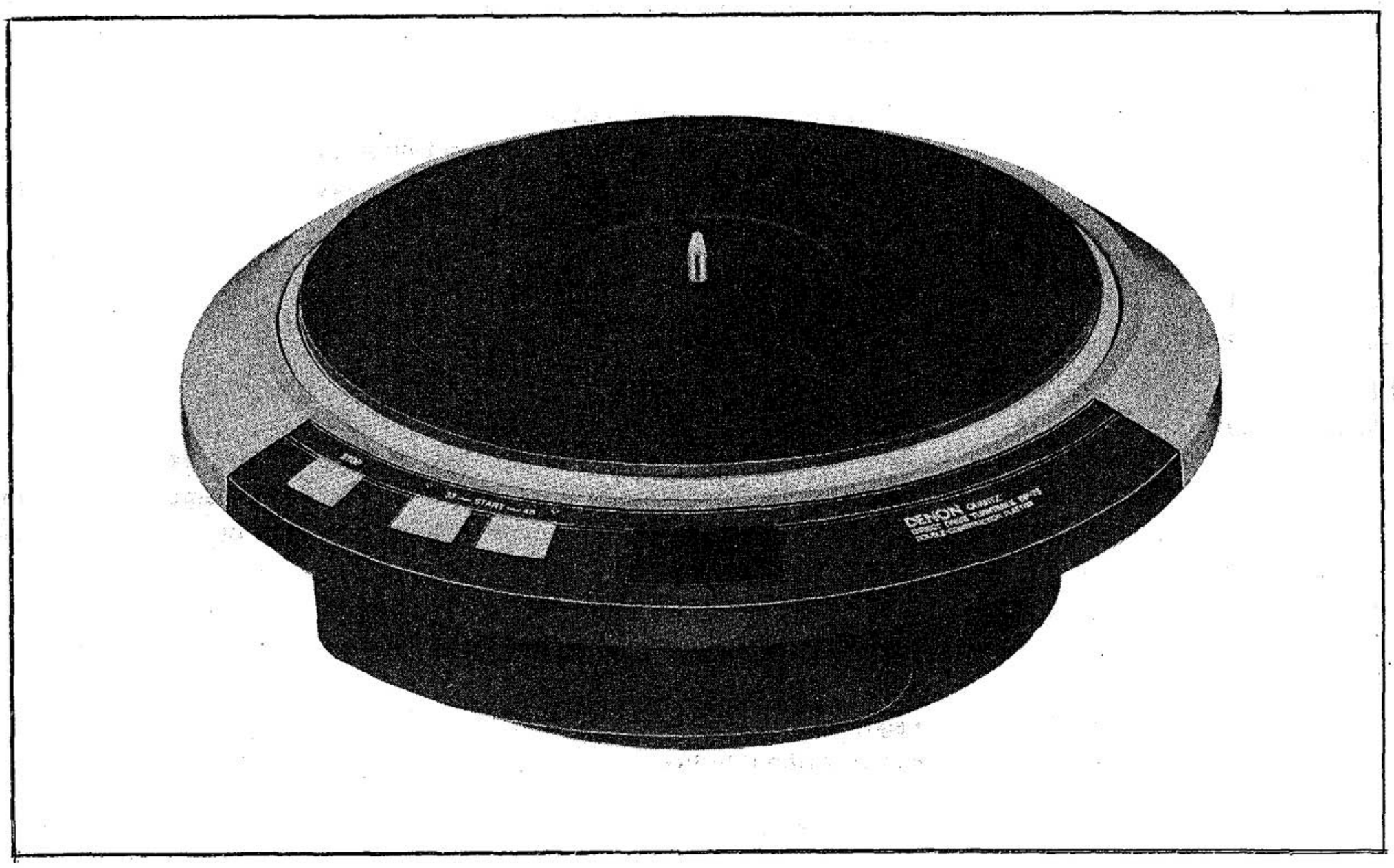

Model DP-75

NIPPON COLUMBIA CO., LTD.

TABLE OF CONTENTS

SPECIFICATIONS 1
SAFETY PRECAUTIONS 1
THEORY OF OPERATION 2
SERVICE HINTS 3
CAUTION 3
PARTS LIST OF KU-350 E SERVO CONTROL UNIT 4
PARTS LIST OF KU-351 QUARTZ SERVO UNIT 4
PARTS LIST OF PS-147 POWER SUPPLY UNIT 5
PARTS LIST OF EXPLODED VIEW 5
EXPLODED VIEW OF MAIN PARTS 6
CIRCUIT DIAGRAM 7
PRINTED CIRCUIT BOARD 8

SPECIFICATIONS

PHONO MOTOR

Drive system:	Direct drive by AC servo motor
Speeds:	33-1/3 rpm and 45 rpm
Wow/flutter:	Less than 0.015% Wrms*
S/N ratio:	More than 80 dB (DIN-B)
Starting time:	Less than 1.6 sec. to reach 33-1/3 rpm.
Turntable platter:	Casted aluminum alloy, 308 mm diam. Weight: 3.1 kg Moment of inertia: 370 kg-cm^2 (including turntable mat)
Motor:	AC out-rotor type servo motor
Speed control system:	Speed servo control by frequency detection system combined with phase control system with reference to the quartz crystal oscillator, (Speed servo control only at variable speed mode)
Load influence:	0% (At out-most groove with stylus force of 150g)
Brake system:	Electronic brake
Speed deviation:	Less than 0.002%

GENERAL

Power supply:	AC 50Hz/60Hz Voltage is indicated on the rating label. Multiple voltages are indicated if the equipment is provided with the user operated voltage selector. If single voltage is indicated, the equipment has only fixed voltage or the voltage selector is blinded by the shield plate.
Power consumption:	9W (At out-most groove with stylus force of 2.5g)
Dimensions:	376 diam. x 140(H)(mm)
Weight:	9.3Kg

* Measured by DENON's method using magnetic pulse wheel.
** Above specifications are subject to alteration without notice.

SAFETY PRECAUTIONS

Replace always with correct parts having correct rating, shape and material, etc. Especially the component with shading and/or ⚠ mark must be replaced only by the specified component for safety reasons.

NOTE

The Model DP-75 can be divided into two groups, the multiple voltage version with voltage selector, and the fixed voltage version with exclusive transformer.

THEORY OF OPERATION

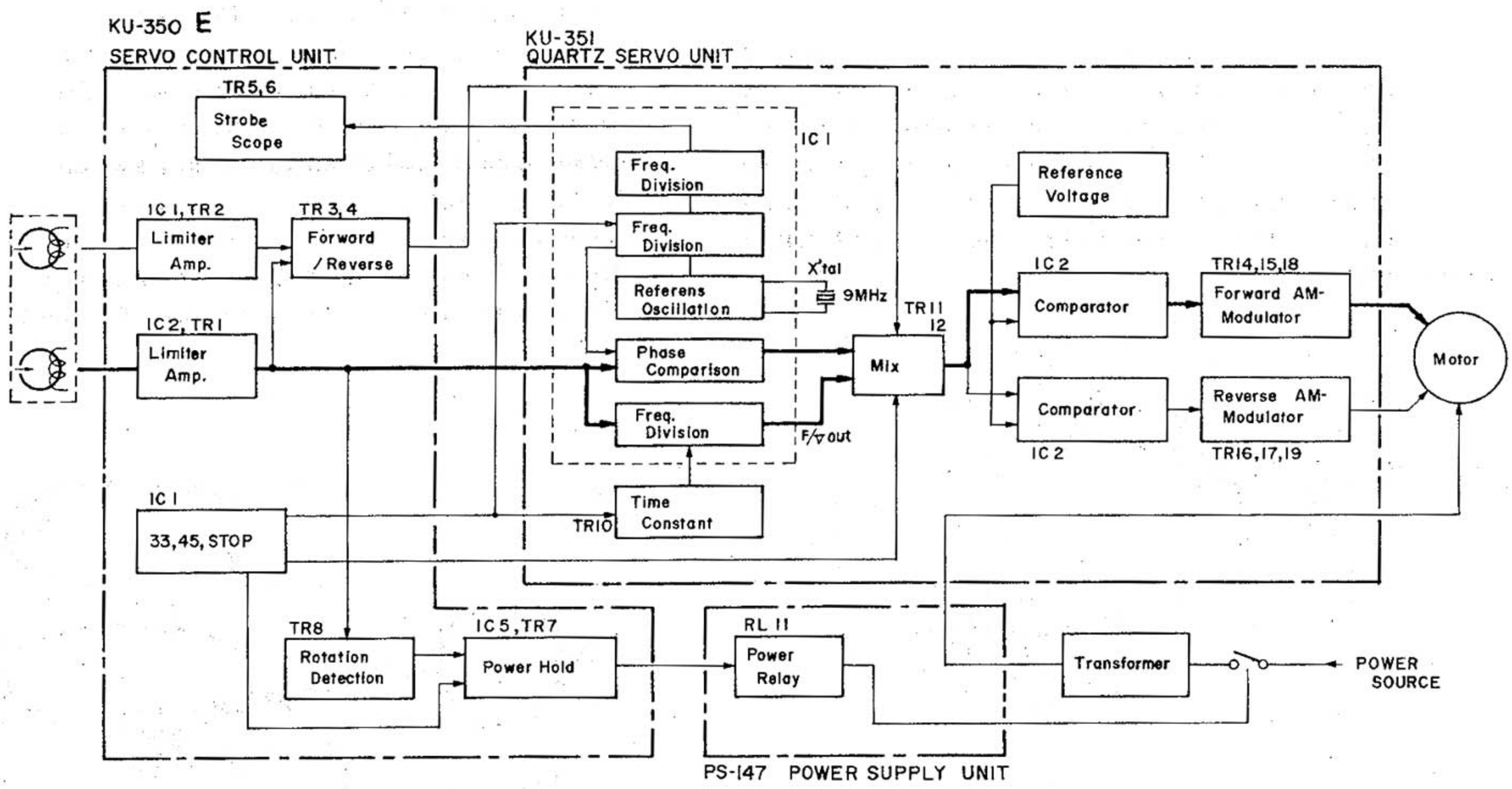

Fig. 1 Block Diagram of DP-75

Block diagram of the phono motor servo circuit is shown in Fig. 1.

The speed detection magnetic head encapsulates two sets of detection windings with a phase difference of 90 degrees. This head detects direction of platter rotation as well as its speed.

The output waveform detected by the magnetic head is shaped into rectangular waves by the limiter circuits (IC 2 and IC 3 on KU-350). The phase difference of these rectangular waves gives signal if the direction of platter is forward or reverse.

At the same time, the output frequency (555.5Hz at 33 rpm, 750Hz at 45 rpm) of one of the limiter circuit (IC 2, TR 1 on KU-350) is fed to the servo control IC (IC 1 on KU-351).

On one branch inside the IC 1 (on KU-351), the frequency signal is converted into a voltage inversely proportional to the speed (frequency) by the F/V converter.

On the other branch, the input frequency is divided therein to the same frequency as the reference frequency (138.9 Hz at 33 rpm, 187.5Hz at 45 rpm) which is also divided from the 9MHz quartz crystal oscillator so that the phase relation can be compared. The phase difference appears at the output in terms of voltage difference.

The output voltages of the F/V converter and the phase comparator are mixed and then compared with a reference voltage to modulate the amplitude of the motor drive circuits of either forward or reverse direction.

The change-over of the speed is performed by changing the dividing denominator of the reference frequency and simultaneously changing the proportion of the F/V converter.

The strobe scope is flashed by 1/2 the frequency of that of the comparison reference.

The limiter output (IC 2, TR 1 on KU-350) further detects if the platter is rotating or not, feeding the signal into the rotation detection circuit (TR 8, IC 5 on KU-350). Combined with this rotation detection circuit, when the start button, 33 or 45 is pressed, the power memory circuit (IC 5 flip-flop, TR 7 on KU-350) holds the power relay RL 11 on PS-147) until the rotation becomes almost still after the stop button is pressed.

SERVICE HINTS

1. When the magnetic head is serviced:

Make sure that the terminal connection is as shown in the Fig. 2. Otherwise, the platter may turn reversely.
Adjust the space between the magnetic head and magnetically coated surface of the platter to 0.2mm by inserting a piece of paper and secure it. Take note that variation of this space causes variation of stopping condition of the platter, or the decay time of the rotation detection circuit. Normal condition while the turntable mat being removed is that there remains a slight forward glinding of platter when stopping. Never allow reverse movement of platter when stopping.

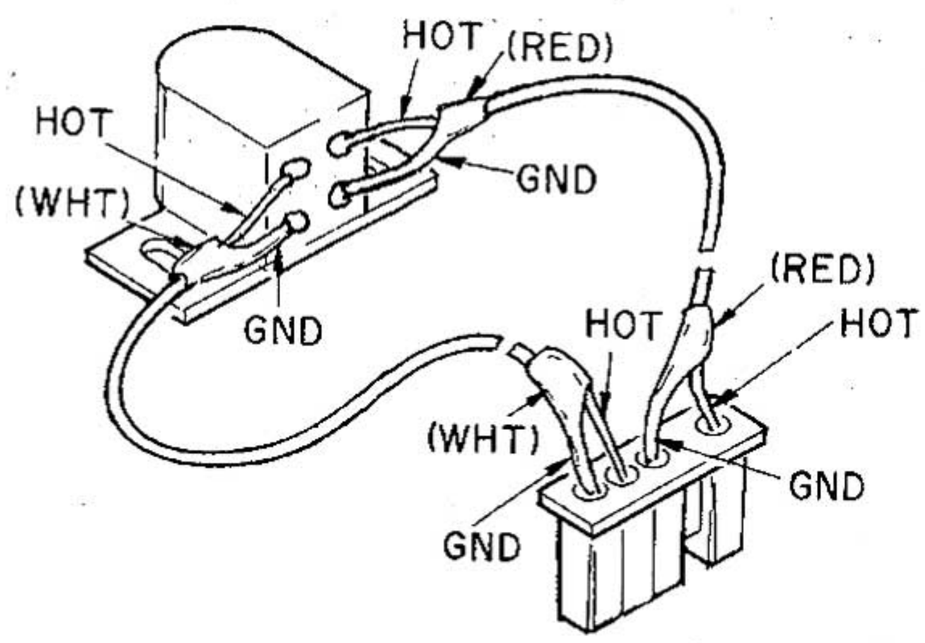

Fig.2 Head connection

2. Confirming regulator voltage:

An IC is employed for regulation voltage, allowing no fine adjustment. Confirm this voltage is 5V.

3. Adjustment of speed (KU-351)

(1) Connect a dual trace oscilloscope to TP-1 on KU-351 P. W. board.

(2) Start 45 rpm rotation first.
Adjust VR 2 so that the sampling pulse comes at 60% position from starting edge of the saw tooth waveform. (See Fig. 3.)

(3) Change over to 33 rpm and adjust VR 1 to bring the pulse to 60% position in the same manner.

NOTE

If a single trace oscilloscope is used for adjustment, connect the ground terminal of the oscilloscope to the sampling waveform output of TP-1 instead of connecting to ground terminal thereof. Duplexed waveform can be observed.

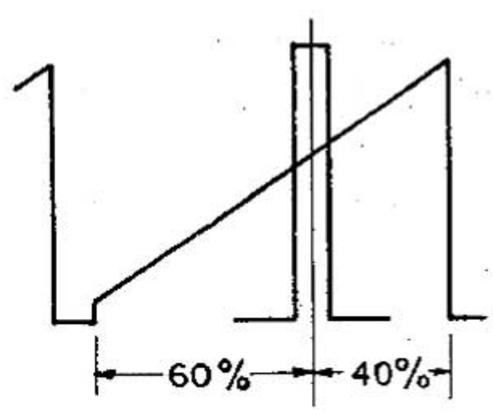

Fig.3 Speed adjustment

CAUTION!
(Models with the voltage selector)

This equipment has been preset for a line voltage of 220V. Before inserting the power plug, please check if this voltage corresponds with the line voltage in your area. If it does not, be sure to adjust the voltage selector switch to the proper setting before operating this equipment. The voltage selector switch is located on the base surface below the turntable platter. Simply insert a screw driver into the voltage selector switch and turn it in either direction so that the desired voltage marked on the switch is positioned at the drilled mark of the base. See the figures below.
Damage of equipment because of missetting of voltage selector is not within the limit of DENON liability.

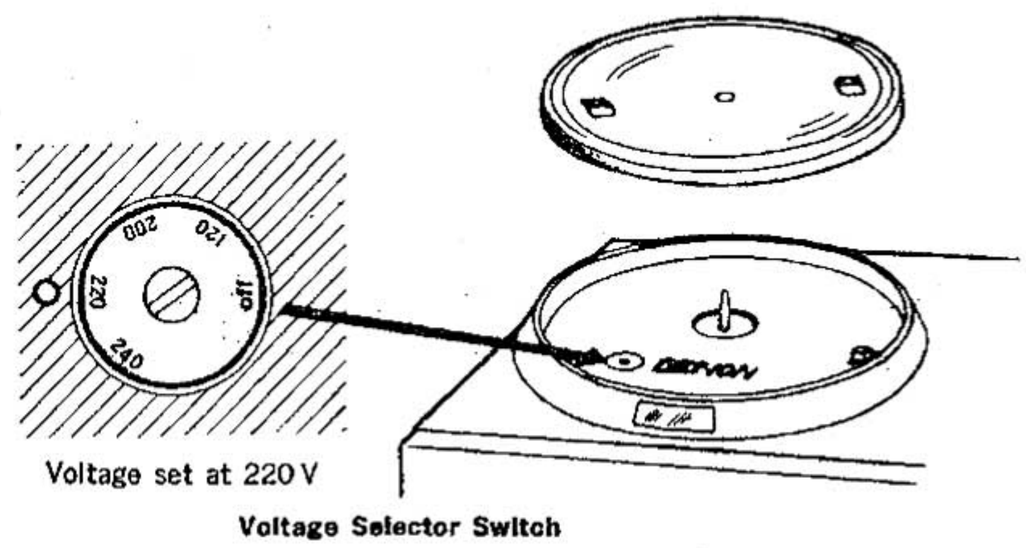

Fig. 4 Voltage Selector Switch

Set the voltage selector in accordance with the nominal power supply voltage as shown in the table.

ACTUAL (nominal) VOLTAGE (volt)	VOLTAGE SETTING
110 115 120	120
200	200
210 220	220
230 240	240

Table 1. Voltage Setting

PARTS LIST

KU-350 E SERVO CONTROL UNIT

Ref. No.	Part No.	Part Name	Remarks
SEMI CONDUCTOR GROUP			
IC4	2680009005	FS7805M	
IC1, 5	2620078009	HD7438	
IC2, 3	2630094028	TA7122BP (C)	
TR1~5, 7, 8	2730204019	2SC2320 (F)	
TR6, 9	2740036002	2SD468 (C)	
D13	2760215007	MI152	
D14	2760215010	MI152R	
D1, 3, 5~12, 18, 19	2760049008	IS2076	
D22	2760236002	HZ5B	
D23	2760098004	02Z8, 2A	
D16, 17, 20 21	2760216019	KB265	
RESISTOR GROUP			
			Carbon film
R1, 2, 5	2412082009	RD14B2E391J	390ΩJ ¼W
R10, 19	2412086005	RD14B2E561J	560ΩJ ¼W
R29, 36~39 41, 46, 47	2412092002	RD14B2E102J	1KΩJ ¼W
R6, 15	2412100004	RD14B2E222J	2.2KΩJ ¼W
R13, 22, 24 27, 30	2412108006	RD14B2E472J	4.7KΩJ ¼W
R12, 21, 40 42, 45	2412116001	RD14B2E103J	10KΩJ ¼W
R14, 23, 28	2412124006	RD14B2E223J	22KΩJ ¼W
R7, 16	2412132001	RD14B2E473J	47KΩJ ¼W
R8, 11, 17, 20, 25, 26, 43, 45	2412140006	RD14B2E104J	100KΩJ ¼W
R9, 18	2412156003	RD14B2E474J	470KΩJ ¼W
CAPACITOR GROUP			
			Electrolitic
C7, 14, 24	2544009002	CE04W1A470 =	47μF 10V
C9, 10, 16 17	2544015009	CE04W1C100 =	10μF 16V
C3	2544016008	CE04W1C330 =	33μF 16V
C19, 23	2544018006	CE04W1C101 =	100μF 16V
C21	2544032008	CE04W1E102 =	1000μF 25V
C6, 13, 26	2544043000	CE04W1HR47 =	0.47μF 50V
			Film
C11, 18	2551060005	CQ93M1H102K	0.001μF 50V
C27	2551064001	CQ93M1H222K	0.0022μF 50V
C5, 12	2551076002	CQ93M1H223K	0.022μF 50V
C22	2551084007	CQ93M1H104K	0.1μF 50V
C25	2551087004	CQ93M1H184K	0.18μF 50V
C1, 2, 4, 20, 28~30	2531004007	CK45B1H102K	0.001μF 50V
C8, 15	2533619005	CC45SL1H470J	47pF 50V
OTHER PARTS GROUP			
	2228085300	P. CIRCUIT BOARD (A)	
	4178021205	HEAT SINK STAY	IC5 FS7805
	4713303016	3x6 CBS	
	FEP12801	2P MINI CONNE PIN ASS	POWER TRANS
	FEP12802	3P MINI CONNE PIN ASS	STROBO
	FEP12803	4P MINI CONNE PIN ASS	HEAD
	2055622079	7P MINI CONNE PIN	LED SW
	2035622637	8P MINI CONNE PIN	
	2035633003	3P EI RIBBON WIRE PLUG	
J1~12 R3, 4	2090008117	JUMPER	
	2058007008	BOARD IN TERMINAL	

KU-351 QUARTZ SERVO UNIT

Ref. No.	Part No.	Part Name	Remarks
SEMI CONDUCTOR GROUP			
IC1	2620186001	SC3120A	
IC2	2630075005	HA17902P	
⚠TR14, 15, 17	2710100010	2SA879 (C)-R	
TR10, 12, 16	2710113007	2SA999 (F)	
TR20	2730108005	2SC1162 (C)	
⚠TR18, 19	2730196004	2SC2023 Z	
TR11, 13	2730204019	2SC2320 (F)	
D1, 9~11	2760049008	1S2076	
D12, 13	2760057029	V06E	
⚠D14, 15	2760280003	RB154	
RESISTOR GROUP			
			Carbon film
R22, 23	2412044005	RD14B2E100J	10Ω ¼W
R24, 31	2412064001	RD14B2E680J	68Ω ¼W
R21, 34	2412068007	RD14B2E101J	100Ω ¼W
R2, 3, 27, 47	2412092002	RD14B2E102J	1KΩ ¼W
R18, 19 32, 33	2412100004	RD14B2E222J	2.2KΩ ¼W
R8, 25, 26	2412014000	RD14B2E332J	3.3KΩ ¼W
R4	2412106008	RD14B2E392J	3.9KΩ ¼W
R6, 38, 39	2412110007	RD14B2E562J	5.6KΩ ¼W
R9, 20, 30	2412116001	RD14B2E103J	10KΩ ¼W
R12	2412120000	RD14B2E153J	15KΩ ¼W
R44	2412124006	RD14B2E223J	22KΩ ¼W
R11	2412126004	RD14B2E273J	27KΩ ¼W
R45, 46, 48	2412132001	RD14B2E473J	47KΩ ¼W
R5	2412158001	RD14B2E564J	560KΩ ¼W
R16	2412160002	RD14B2E684J	680KΩ ¼W
R17	2412164008	RD14B2E105J	1MΩ ¼W
R29	2410757006	RD14B2H225J	2.2MΩ ½W
R14	2462004008	RK14=2E122F	1.2KΩ ¼W
R1, 7	2462004011	RK14=2E332F	3.3KΩ ¼W
R36	2462004024	RK14=2E472F	4.7KΩ ¼W
R43	2462004037	RK14=2E223F	22KΩ ¼W
R15	2462004040	RK14=2E393F	39KΩ ¼W
R13	2462004053	RK14=2E683F	68KΩ ¼W
			Metal film
R28, 35	2440005029	RS14B3A010JNBF	1Ω 1W
VR1, 2	EP-546213	SOLID VOLUME	10KΩ
CAPACITOR GROUP			
			Electrolitic
C15	2544003008	CE04W0J101 =	100μF 6.3V
C9	2544015009	CE04W1C100 =	10μF 16V
C2	2544016008	CE04W1C330 =	33μF 16V
C13, 14	2544044009	CE04W1H010 =	1μF 50V
			Film
C10	2551062003	CQ93M1H152K	0.0015μF 50V
C6	2551070008	CQ93M1H682K	0.0068μF 50V
C7, 11, 12	2551072006	CQ93M1H103K	0.01μF 50V
C8	2551073005	CQ93M1H123K	0.012μF 50V
C5	2551122011	CQ93M1H563J	0.056μF 50V
C3, 4	2533619005	CC45SL1H470J	47pF 50V
C1	2531004007	CK45B1H102K	0.001μF 50V
OTHER PARTS GROUP			
	2228243003	P. CIRCUIT BOARD (B)	
	4178055103	HEAT SINK STAY	
	4713303016	3x6 CBS	
	2618007008	CRYSTAL	9MHz
	2328008106	INDUCTOR	
	2035605009	3P MINI CONNE SOCKET	T.P
	FEP12803	4P MINI CONNE PIN ASS	TO PS-145
	2045333015	8P EI RIBBON WIRE PLUG	TO KU-350

PARTS LIST

PS-147 POWER SUPPLY UNIT

Ref. No.	Part No.	Part Name	Remarks
SEMI CONDUCTOR GROUP			
D11	2760237001	RV06	
D2~5	3939041001	LED	
RESISTOR GROUP			
			Carbon film
R2, 3	2412062003	RD14B2E560J	56Ω ¼W
R1	2412164008	RD14B2E105J	1MΩ ¼W
R4	2410163001	RD14B2H121J	120Ω ½W
CAPACITOR GROUP			
C1~6	2538009005	CK45B2GAC471K	
			Film
C7	2568007093	CF99=2EAC704J	AC250V
C8	2568007022	CF99=2EAC305J	AC250V
			Oil
C9, 10	2518001052	CP05C=AC333M	
OTHER PARTS GROUP			
SK2	FEP0429K	SPARK KILLER	
	2228244002	P. CIRCUIT BOARD (C)	
	2061031016	FUSE	0.8A/250V
	FEP1287	FUSE HOLDER	
	2148051003	POWER RELAY	
CH1, 2	2398001007	LINE FILTER COIL	
S1	2129015000	PUSH SWITCH	
S2, 3	2129077006	MICRO SWITCH	
	EE-1656	BASE TERMINAL	
	2058009006	TERMINAL	
	FEP1280 1	2P MINI CONNE PIN ASS	
	FEP1280 2	3P MINI CONNE PIN ASS	
	2035622008	3P MINI CONNE PIN	
	2033634043	2P MINI CON. WIRE	
	2033653008	3P MINI CON. WIRE	
	2035649007	4P MINI CON. WIRE	

PARTS LIST OF EXPLODED VIEW

Ref. No.	Part No.	Part Name	Remarks
1	4468070005	MOTOR BOARD	
2	4498036006	COVER ASS'Y	
3	4713403013	4x6 CBS	
4	4218149209	TURNTABLE ASS'Y	
5	4450020005	BUSHING	
⚠ 6	2062002031	AC CORD	
7	FEP1206	EARTH WIRE	
8	4713303016	3x6 CBS	
9	4713301018	3x4 CBS	
⚠ 10	2339035003	POWER TRANS	
11	1298004008	CUSHION RUBBER	
12	4438060003	SPACER	
13	4713311011	3x25 CBS	
14	4418204203	CB STAY (B)	
15	1468052204	MIRROR CASE ASS'Y	
⚠ 16	2178039202	SERVO MOTOR	
17	4713404012	4x8 CBS	
18	3918425004	MAGNETIC HEAD ASS'Y	
19	4148090101	MOTOR COVER	
20	4700007019	3x6 CPSW	
21	WA-01074	WASHER	
22	2098005015	EARTH LEAD	
23	1468051001	STROBO WINDOW	
24	4148022001	BLIND	
25	3939087007	SEL303G	
26	4538001108	LED SOCKET	
27	4418161003	SOCKET SUPPORT	
28	4218094040	RUBBER SHEET	
29	4148023314	SHIELD PLATE	
30	FE-25131	BUSH PLATE	
31	4418052206	C.B. STAY	
32	1468037009	ACRYL COVER	
33	4148036000	SHUTTER	
34	4712303017	3x6 CFS	
35	1138042201	KNOB	
36	4418282005	ACTUATOR	
37	1138043200	KNOB SUPPORT	
38	4438131107	HINGE SHAFT	
39	4418164408	SPRING PLATE (A)	
40	4498015108	SWITCH COVER	
41	4713403013	4x6 CBS	
42	4418162109	HINGE	
43	4418278006	SW PLATE	
44	2129052012	LEAF SWITCH	
45	4418223103	SPRING PLATE (B)	
46	4770010106	SPECIAL SCREW	
47	KU-350E	SERVO CONTROL UNIT	
48	KU-351	QUARTZ SERVO UNIT	
⚠ 49	PS-147	POWER SUPPLY UNIT	
⚠ 50	PS-147-44C	POWER SW S3	
51	PS-147-44B	STOP SW S2	
52	4733800010	3x8 CBTS	
53	4713304015	3x8 CBS	
54	4418278019	SWITCH PLATE	
⚠ 55	2123315010	VOLTAGE SELECTOR	
56	4713203019	2.6x6 CBS	
57	2033902005	PLUG ADAPTOR	

EXPLODED VIEW

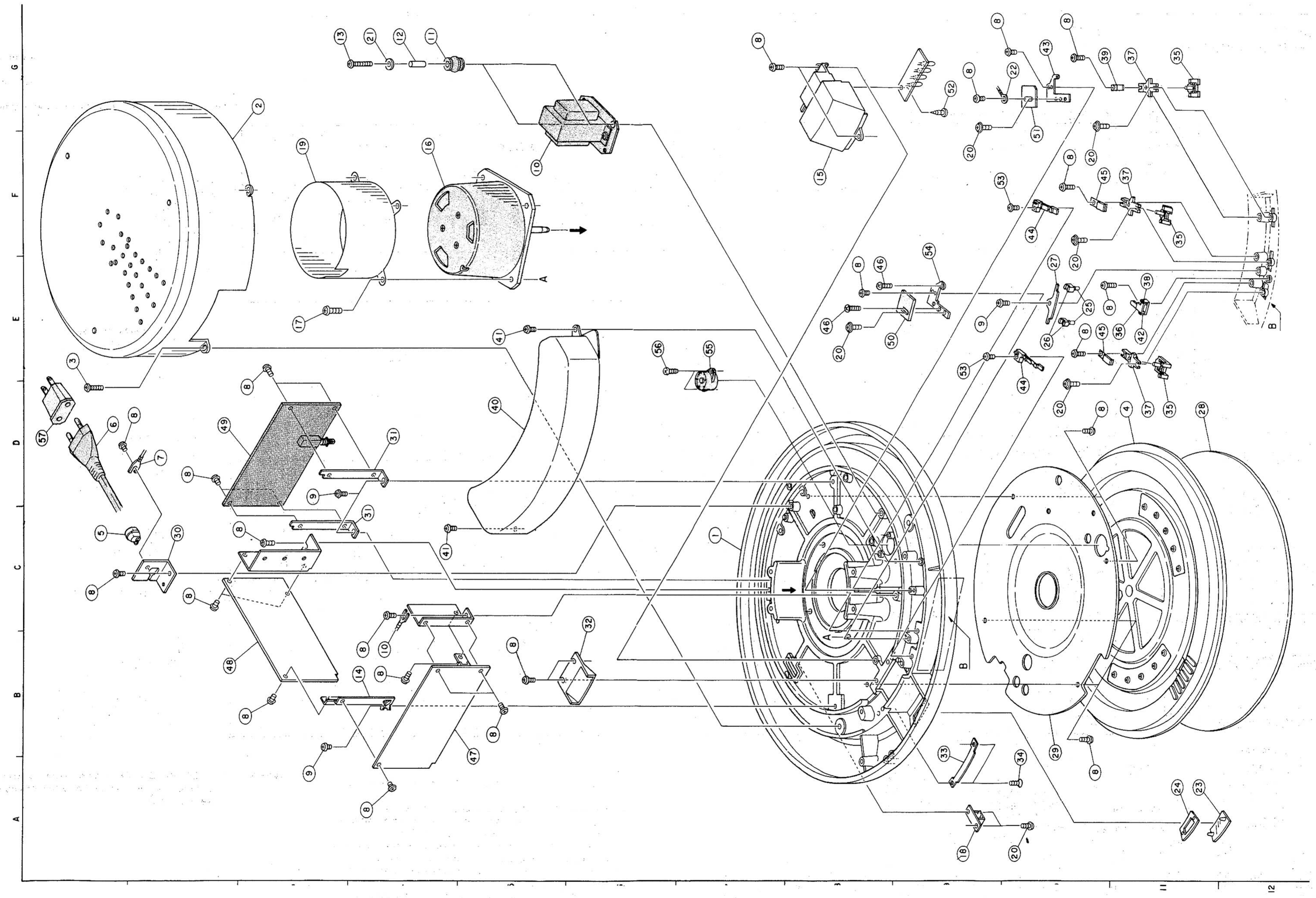

DP-75
WIRING DIAGRAM

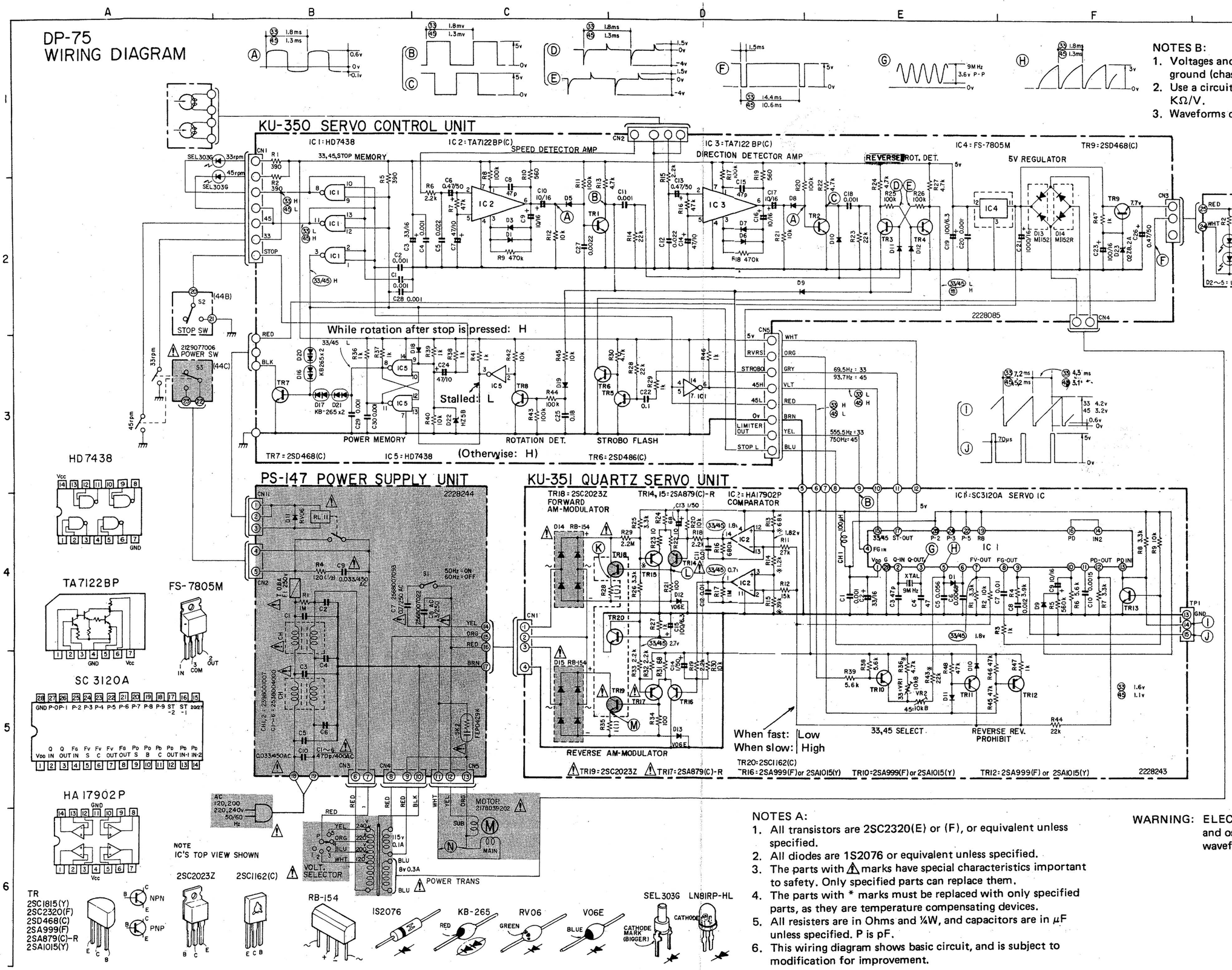

NOTES B:

1. Voltages and waveforms, except (N) are measured against ground (chassis).
2. Use a circuit tester with input impedance of more than 100 KΩ/V.
3. Waveforms combined by brackets have same time axis.

NOTES A:

1. All transistors are 2SC2320(E) or (F), or equivalent unless specified.
2. All diodes are 1S2076 or equivalent unless specified.
3. The parts with ⚠ marks have special characteristics important to safety. Only specified parts can replace them.
4. The parts with * marks must be replaced with only specified parts, as they are temperature compensating devices.
5. All resisters are in Ohms and ¼W, and capacitors are in μF unless specified. P is pF.
6. This wiring diagram shows basic circuit, and is subject to modification for improvement.

WARNING: ELECTRIC SHOCK! Do not touch turntable chassis and oscilloscope at same time while observing waveform (N).

PRINTED CIRCUIT BOARD

KU-350E SERVO CONTROL UNIT

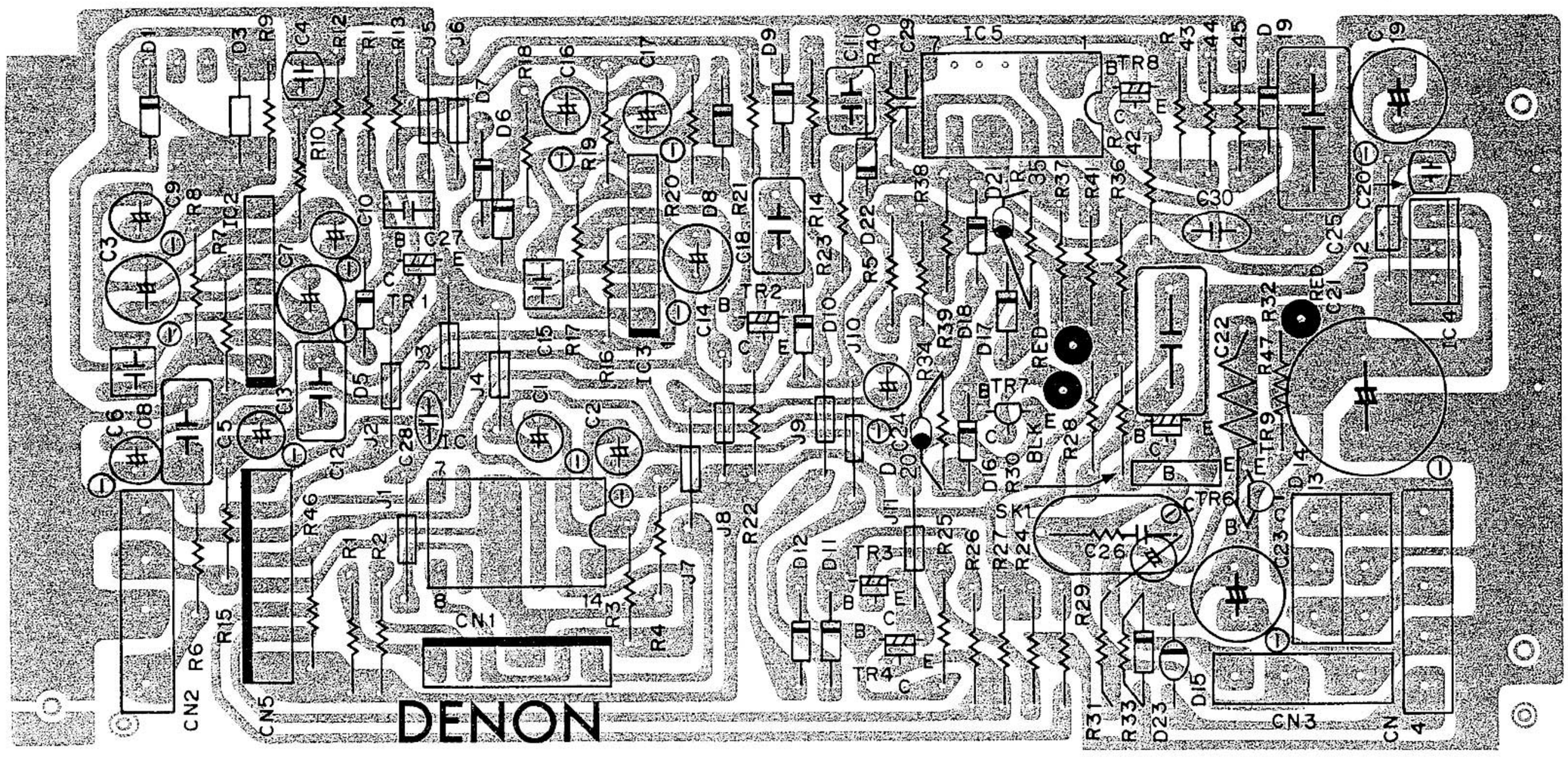

KU-351 QUARTZ SERVO UNIT

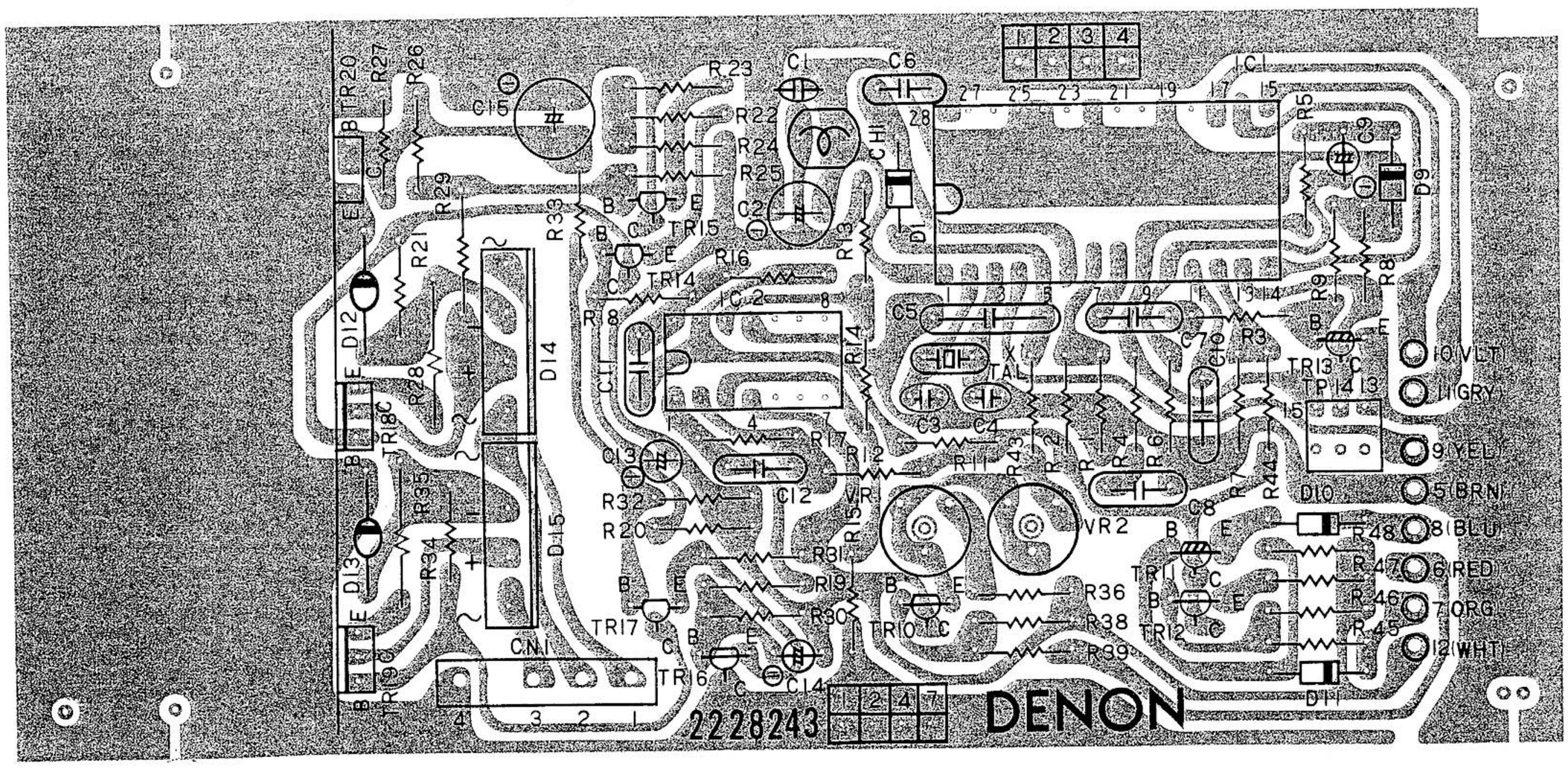
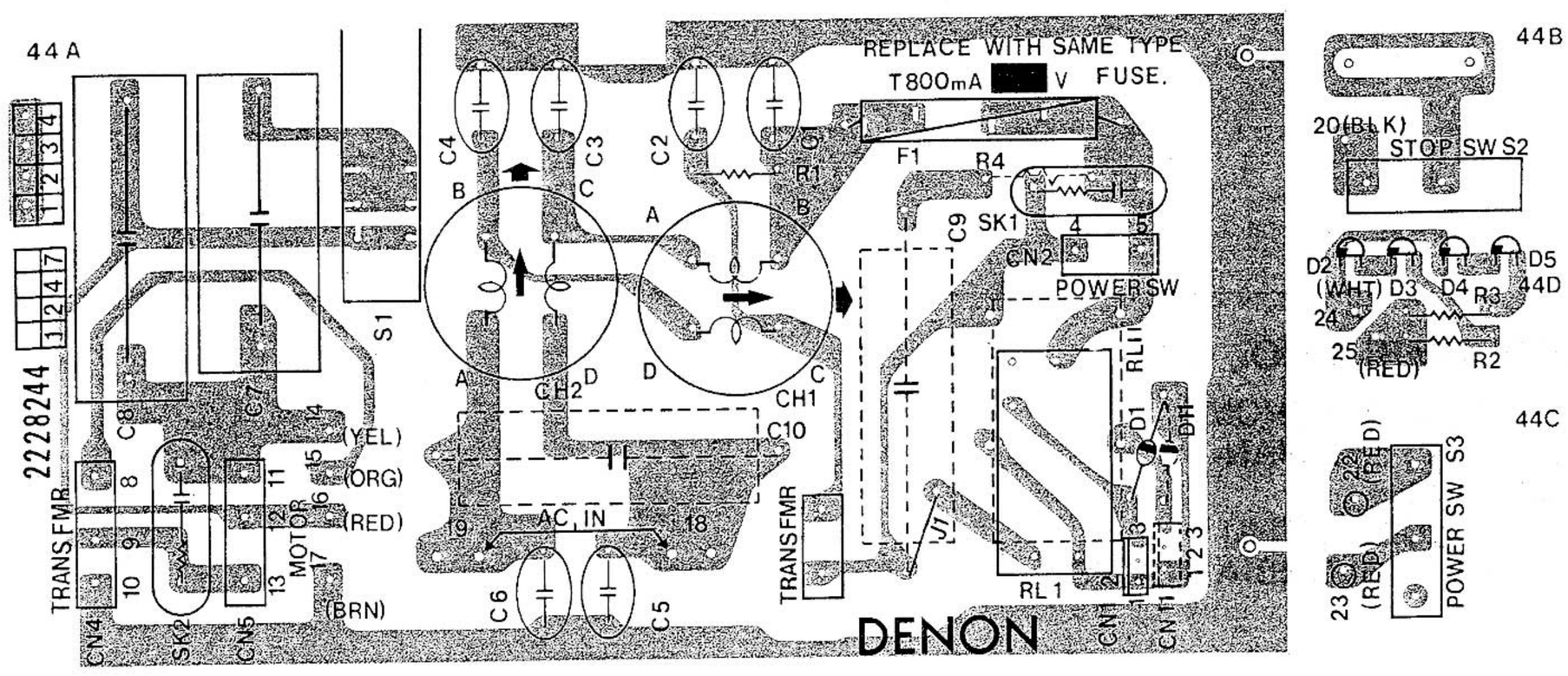
PS-147 POWER SUPPLY UNIT