DENON

For U.S.A., Canada, Europe & Japan model

Ver. 2

# SERVICE MANUAL

# MODEL DVD-2900

## DVD AUDIO-VIDEO / SUPER AUDIO CD PLAYER

**注　意**

サービスをおこなう前に、このサービスマニュアルを必ずお読みください。本機は、火災、感電、けがなどに対する安全性を確保するために、さまざまな配慮をおこなっており、また法的には「電気用品安全法」にもとづき、所定の許可を得て製造されております。従ってサービスをおこなう際は、これらの安全性が維持されるよう、このサービスマニュアルに記載されている注意事項を必ずお守りください。

- For purposes of improvement, specifications and design are subject to change without notice.
- Please use this service manual with referring to the operating instructions without fail.
- Some illustrations using in this service manual are slightly different from the actual set.

- 本機の仕様は性能改良のため、予告なく変更することがあります。
- 補修用性能部品の保有期間は、製造打切後 8年です。
- 修理の際は､必ず取扱説明書を参照の上、作業を行ってください。
- 本文中に使用しているイラストは、説明の都合上現物と多少異なる場合があります。

DENON, Ltd.

16-11, YUSHIMA 3-CHOME, BUNKYOU-KU, TOKYO 113-0034 JAPAN
Telephone: 03 (3837) 5321

X0168V.02 DE/CDM 0304

## SAFETY PRECAUTIONS

The following check should be performed for the continued protection of the customer and service technician.

## LEAKAGE CURRENT CHECK

Before returning the unit to the customer, make sure you make either (1) a leakage current check or (2) a line to chassis resistance check. If the leakage current exceeds 0.5 milliamps, or if the resistance from chassis to either side of the power cord is less than 460 kohms, the unit is defective.

## LASER RADIATION

Do not stare into beam or view directly with optical instruments, class 3A laser product.

**注　意**　サービス、点検時には次のことにご注意願います。

◉注意事項をお守りください！
サービスのとき特に注意を必要とする個所については、キャビネット、部品、シャーシなどにラベルや捺印で、注意事項を表示しています。これらの注意書きおよび取扱説明書などの注意事項を必ずお守りください。

◉感電に注意！
(1) このセットは、交流電圧が印加されていますので、通電時に内部金属部に触れると感電することがあります。従って通電サービス時には、絶縁トランスの使用や手袋の着用、部品交換には、電源プラグを抜くなどして、感電にご注意ください。
(2) 内部には、高電圧の部分がありますので、通電時の取扱には、十分ご注意ください。

◉指定部品の使用！
セットの部品は難燃性や耐電圧など安全上の特性を持ったものとなっています。従って交換部品は、使用されていたものと同じ特性の部品を使用してください。特に配線図、部品表に⚠印で指定されている安全上重要な部品は必ず指定のものをご使用ください。

◉部品の取付けや配線の引きまわしは、元どおりに！
安全上、テープやチューブなどの絶縁材料を使用したり、プリント基板から浮かして取付けた部品があります。また内部配線は引きまわしやクランパーによって発熱部品や高圧部品に接近しないように配慮されていますので、これらは必ず元どおりにしてください。

◉サービス後は安全点検を！
サービスのために取り外したねじ、部品、配線などが元どおりになっているか、またサービスした個所の周辺を劣化させてしまったところがないかなどを点検し、外部金属端子部と、電源プラグの刃の間の絶縁チェックをおこなうなど、安全性が確保されていることを確認してください。

（絶縁チェックの方法）
電源コンセントから電源プラグを抜き、アンテナや、プラグなどを外し、電源スイッチを入れます。500V絶縁抵抗計を用いて、電源プラグのそれぞれの端子と、外部露出金属部〔アンテナ端子、ヘッドホン端子、マイク端子、入力端子など〕との間で、絶縁抵抗値が1MΩ以上であること、この値以下のときは、セットの点検修理が必要です。

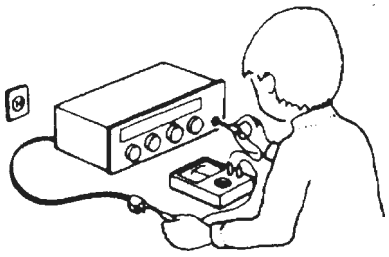

**注　意**　安全上重要な部品について

本機に使用している多くの電気部品、および機構部品は安全上、特別な特性を持っています。この特性はほとんどの場合、外観では判別つきにくく、また、もとの部品より高い定格（定格電力、耐圧）を持ったものを使用しても安全性が維持されるとは、限りません。安全上の特性を持った部品は、このサービスマニュアルの配線図、部品表につぎのように表示していますので、必ず指定されている部品番号のものを使用願います。

(1)配線図… ⚠マークで表示しています。

(2)部品表… ⚠マークで表示しています。
指定された部品と異なるものを使用した場合には、感電、火災などの危険を生じる恐れがあります。

# DISASSEMBLY

(Follow the procedure below in reverse order when reassembling.)

## 1. Top Cover

(1) Remove 10 screws on the top and both sides, and 2 screws on the rear.
(2) Widen the Top Cover a little laterally, then detach it with sliding in the arrow direction.

# 各部のはずしかた

（組み立てるときは、逆の順序で行ってください。）

## 1. トップカバーのはずしかた

(1) 側面及び上面からねじ 10 本、後ろからねじ 2 本をはずします。
(2) 左右に少し広げ、矢印の方向にずらしながら、はずします。

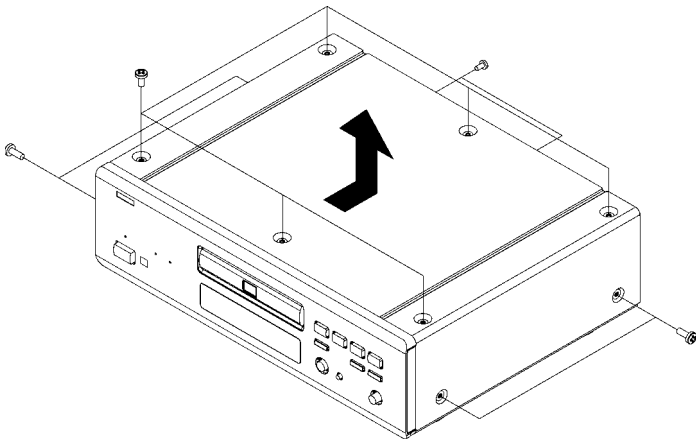

## 2. Loader Panel, Front Panel

### 2.1. When the Disc Tray can be ejected electrically

(1) After removing the Top Cover, proceed as follows.
(2) Plug the power cord to the wall outlet, switch on the power, and press the “OPEN/CLOSE” button to open the Disc Tray.
(3) Detach the Loader Panel by lifting it in the arrow direction.
(4) Press the “OPEN/CLOSE” button to close the Disc Tray, then unplug the power cord.
(5) Disconnect the wire (CX025, CX061) connecting the Front Panel’s P.W.B. and the power PWB in the Chassis.
(6) Remove 4 top screws and 4 bottom screws, then detach the Front Panel to the arrow direction.
(7) Disconnect the FFC (CX171) connecting the Front Panel’s P.W.B. and the main P.W.B. in the Chassis.

## 2. フロントパネル、ローダーパネルのはずしかた

### 2.1. ディスクトレイが電動でオープンできる場合

(1) トップカバーをはずした状態で作業します。
(2) 電源コードを電源コンセントに差し込み、電源スイッチを押し、「OPEN/CLOSE」ボタンを押して、ディスクトレイをオープンします。
(3) ローダーパネルを矢印の方向に持ち上げ、はずします。
(4) 「OPEN/CLOSE」ボタンを押し、ディスクトレイをクローズして、電源コンセントから電源コードを抜きます。
(5) フロントパネル内の基板と本体側電源基板を接続シテイルワイヤー (CX025,CX061) をはずします。
(6) 上からねじ４本、下からねじ４本をはずし、フロントパネルを矢印の方向にはずします。
(7) フロントパネル内の基板と本体側メイン基板を接続している FFC（CX171）をはずします。

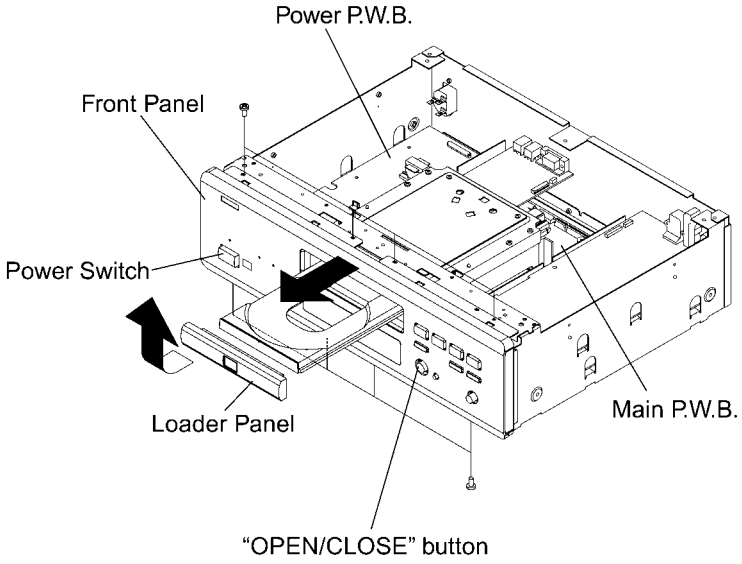

### 2.2. When the Disc Tray cannot be ejected electrically

(1) After removing the Top Cover, proceed as follows.
(2) Insert a screwdriver(-) into the left hole of the Mecha. Fix Bracket, and push the Plate Gear of the DVD Mecha. slowly to open the Disc Tray.
(3) Remove the Loader Panel, and close the Disc Tray.
(4) Detach the Front Panel following the same steps described on the previous page 1.2.1. (5) - (7).

### 2.2. ディスクトレイが電動でオープンできない場合

(1) トップカバーをはずした状態で作業します。
(2) メカフィクスブラケットの左側の穴に（－）ドライバーをいれ、プレートギアをゆっくり押してディスクトレイを開きます。
(3) ローダーパネルをはずし、ディスクトレイを閉じます。
(4) 前項 1.2.1. の（5）～（7）と同様に、フロントパネルをはずします。

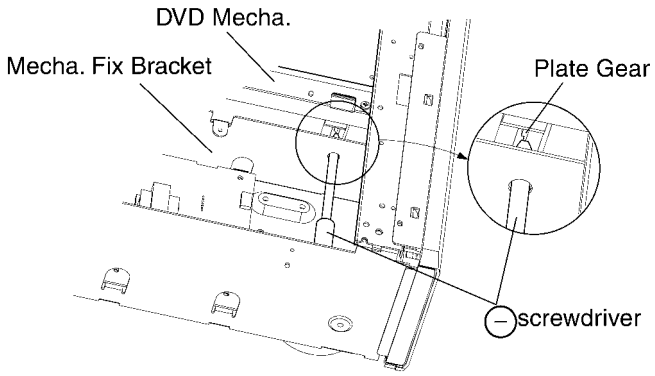


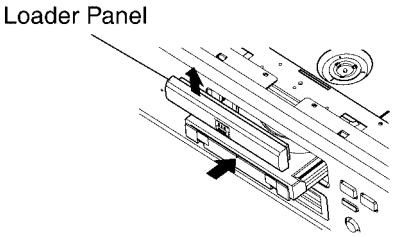


## 3. Video P.W.B.

(1) Disconnect 33P FFC (CY331) and 5P connector (CY053).
(2) Remove 2 screws on the Video P.W.B.
(3) Remove 2 screws from the rear.
(4) Detach the Video P.W.B. to the arrow direction.

## 3. ビデオ基板のはずしかた

(1) 33P FFC（CY331) と 5P コネクター（CY053) をはずします。
(2) 基板からねじ 2 本をはずします。
(3) リア側からねじ 4 本をはずします。
(4) ビデオ基板を矢印の方向へはずします。

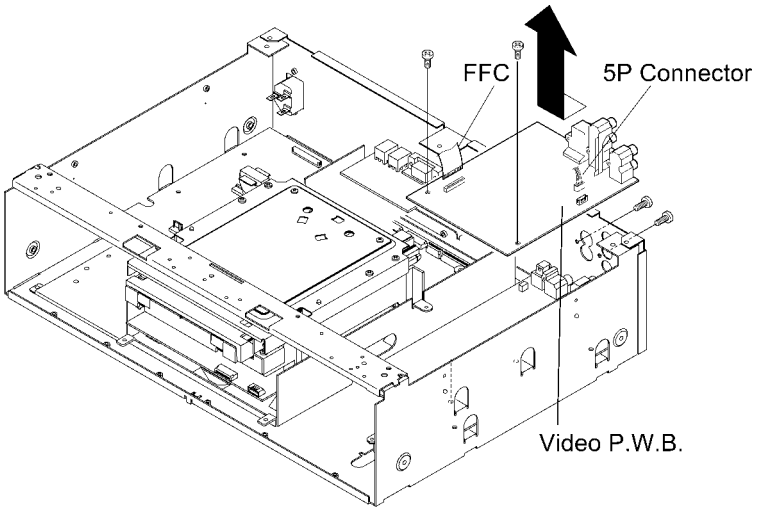

## 4. DVD Mecha.

(1) Disconnect 27P FFC (CY271) and 13P FFC (CY131) from the Main P.W.B..
(2) Disconnect 12P connector (CY121) from Power P.W.B..
(3) Remove 4 screws on the DVD Mecha and 2 screws on the Main P.W.B., then take it off in the arrow direction.

## 4. DVD メカのはずしかた

(1) メイン基板からの 13P FFC（CY131) をはずします。
(2) パワー基板からの 12P コネクター（CY121) をはずします。
(3) DVD メカからねじ 4 本、メイン基板からねじ 2 本をはずし、矢印の方向へ DVD メカをはずします。

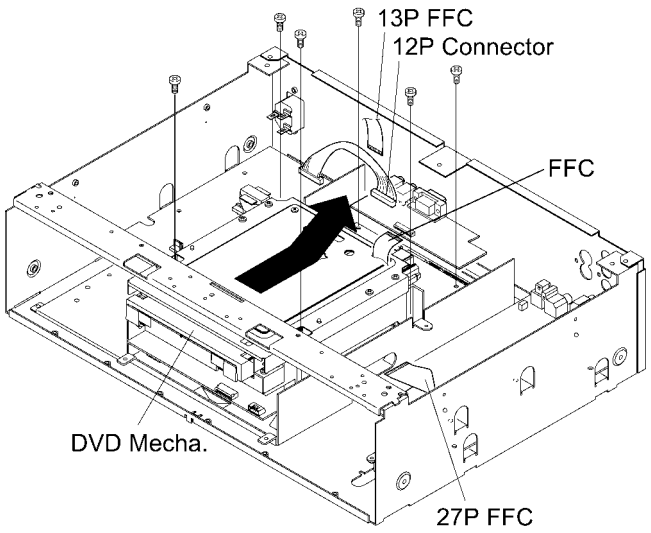


## 5. Audio P.W.B./Power P.W.B.

### 5.1. Audio P.W.B.

(1) Disconnect 4P connector (CY041).
(2) Remove 5 screws on the Audio P.W.B., 4 screws from the rear.

### 5.2. Power P.W.B.

(1) Remove 5 screws on the Power P.W.B..
(2) Disconnect 2P connector (CX024)

## 5. オーディオ基板 / パワー基板のはずしかた

### 5.1. オーディオ基板

(1) 4P コネクター（CY041) をはずします。
(2) オーディオ基板からねじ 5 本とリア側からねじ 4 本をはずします。

### 5.2. パワー基板

(1) パワー基板からねじ 5 本をはずします。
(2) コネクター（CX024）をはずします。

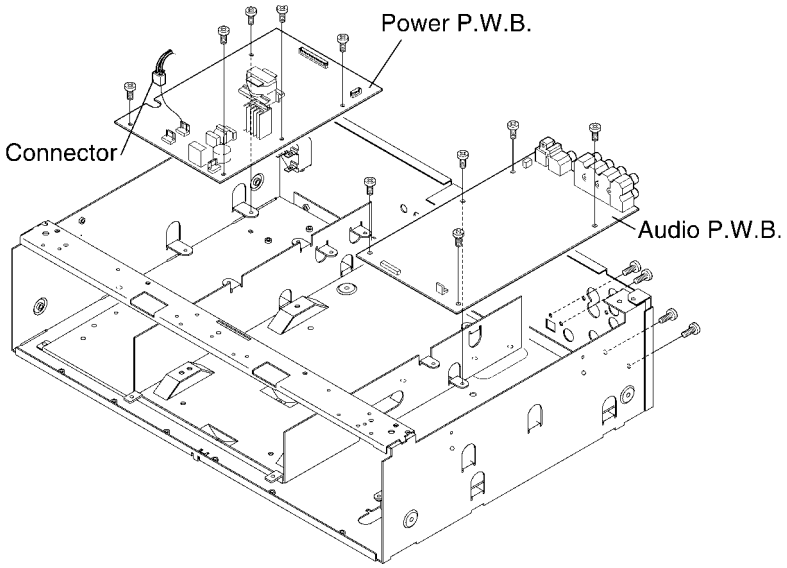

## 6. Mecha.Unit

(1) Remove 2 screws on the top of the Mecha. Unit, and detach the Guide Clamp Bracket with sliding in the arrow direction.
(2) Solder the short-circuit on the Traverse Unit. (Refer to “Traverse Unit Disassembly” on the page 7.
(3) Disconnect the wires (CX151, CX241, CX031, CX051) connecting with the Main PWB.
(4) Turn over the Mecha. Unit/Main PWB assembly, and remove 3 screws.

## 6. メカユニットのはずしかた

(1) メカの上からねじ 2 本をはずし、ガイドクランプブラケットを矢印方向にずらしながらはずします。
(2) ドライバーメカのショートサーキットを半田付けします。（トラバースユニットのはずしかた 7 ページ参照）
(3) メイン基板と接続しているワイヤー（CX151, CX241, CX031, CX051）をはずします。
(4) 一体のメカユニット / メイン基板を裏返し、ねじ 2 本をはずします。

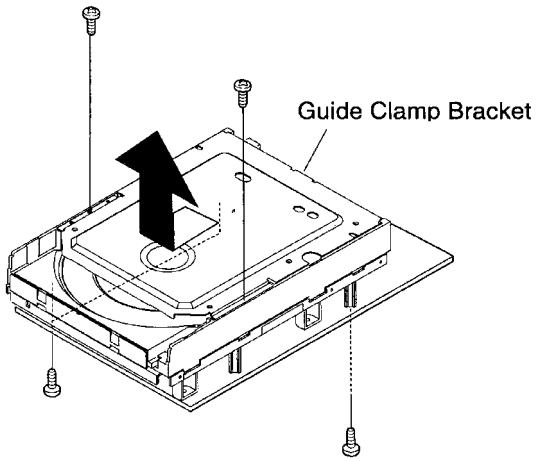


## 7. Traverse Unit Disassembly

**Caution: The optical pickup can be damaged easily by static electricity charged on human body. Take necessary anti-static measures when repairing around the optical pickup.**

### 7.1. Guide Clamp Bracket disassembly

(1) Remove 2 screws.
(2) Remove Guide Clamp Bracket to arrow direction.

## 7. トラバースユニットのはずしかた

**注意：光ピックアップは、人体に帯電した静電気等で静電破壊することがあります。光ピックアップ周辺を修理する際は、必要な静電対策を行ってください。**

### 7.1. ガイドクランプブラケットのはずしかた

(1) ねじ 2 本をはずします。
(2) ガイドクランプブラケットを矢印方向にとりはずします。

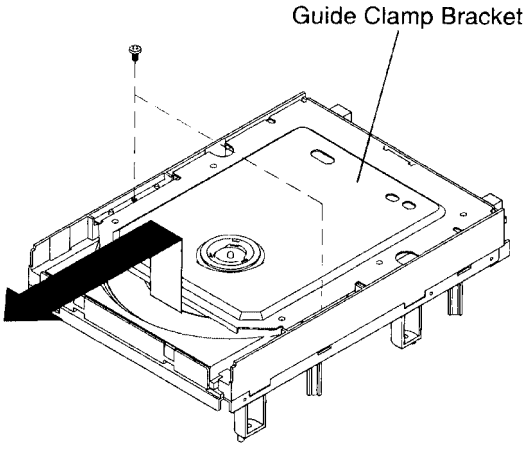

### 7.2. Tray disassembly
(1) Remove to arrow direction.
(2) Solder the short-circuit (see in the frame).

### 7.2. トレイのはずしかた
(1) 矢印方向にとりはずします。
(2) 半田付けショートを行います。(枠内図参照 )

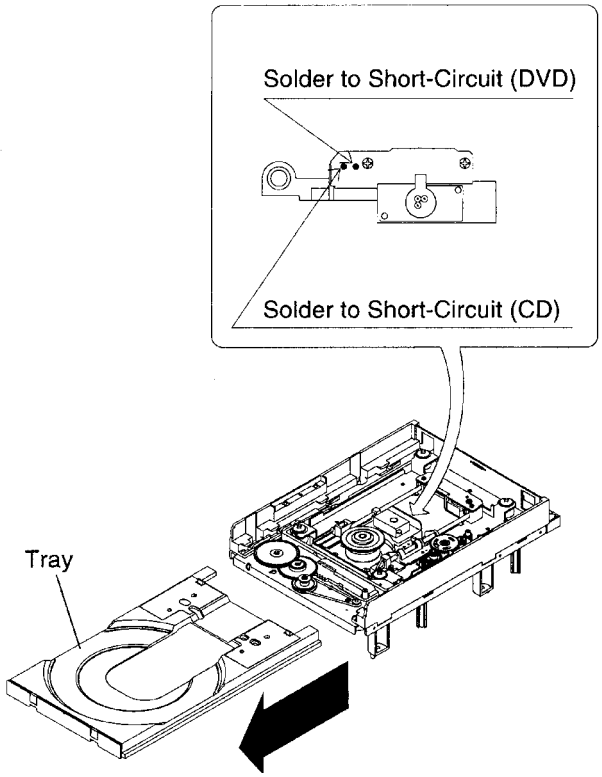


### 7.3. Traverse Unit disassembly
(1) Remove 24P FFC (CX241), 15P FFC (CX151), 5P PH WIRE (CX051) and 3P PH WIRE (CX031) connecting with from the Main P.W.B..
(2) Remove 4 screws fixing Damper.
(3) Remove Traverse Unit to arrow direction.

### 7.3. トラバースユニットのはずしかた
(1) メイン基板に接続している 24P FFC（CX241)、15P FFC (CX151),5P PH ワイヤ（CX051)、3P PH ワイヤ (CX031) をはずします。
(2) ダンパーを固定しているねじ 4 本をはずします。
(3) トラバースユニットを矢印方向にとりはずします。

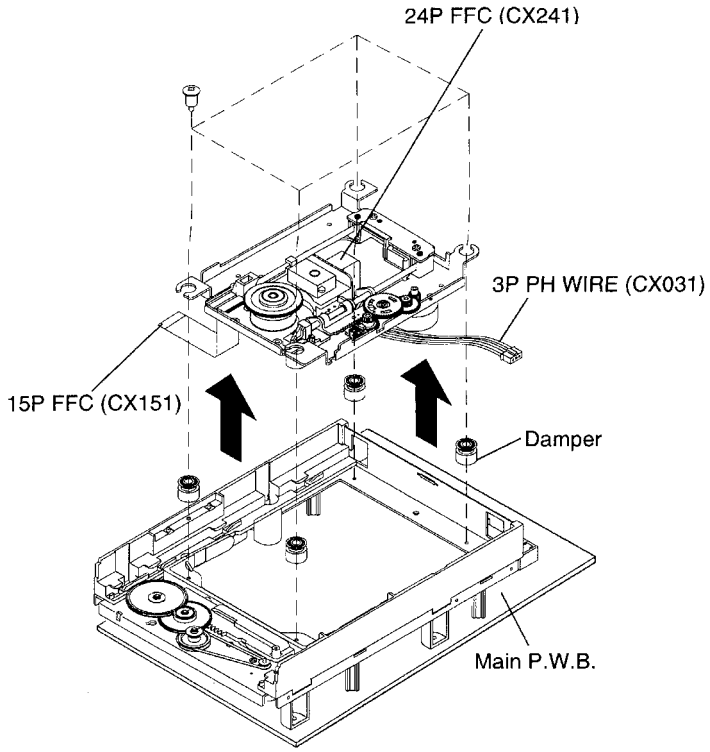

## Note for disassembly Traverse Unit

(1) When assembling, reverse the order of the above.
(2) When inserting Tray, confirm boss on Slide Cam set to ditch of the Tray (Compare with below drawing).

## トラバースユニット分解の注意

(1) 組み立てるときは、上記の逆の順序で行ってください。
(2) トレイ組込み時、スライドカムのボスがトレイの溝に合っているか確認してください。（下図参照）

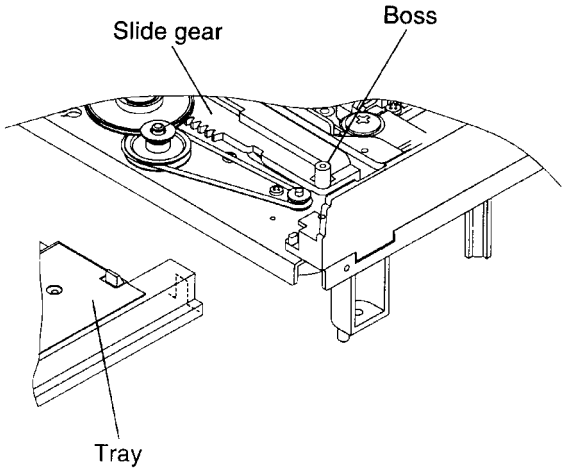

# DIAGNOSTICS OF OPTICAL PICKUP AND REPLACING TRAVERSE UNIT

Make failure diagnostics of the Optical Pickup as follows.
If the laser drive current becomes more than 1.5 times of the initial value, the Optical Pickup should be replaced.
The laser drive current is registered on the seal attached to the rear of the Mecha.Unit.
In case of replacing the Pickup, change the whole part of the Traverse Unit.
No mechanical adjustment is necessary after the replacement.

# 光ピックアップの故障診断とトラバースユニットの交換

次の順序で故障診断を行ってください。
レーザー駆動電流が初期値の 1.5 倍以上になっている場合は光ピックアップ交換の目安となります。
レーザーの電流初期値は、メカの後部のシール上に記入されています。
ピックアップ交換の場合は、トラバースユニット単位での交換となります。メカの調整は不要です。

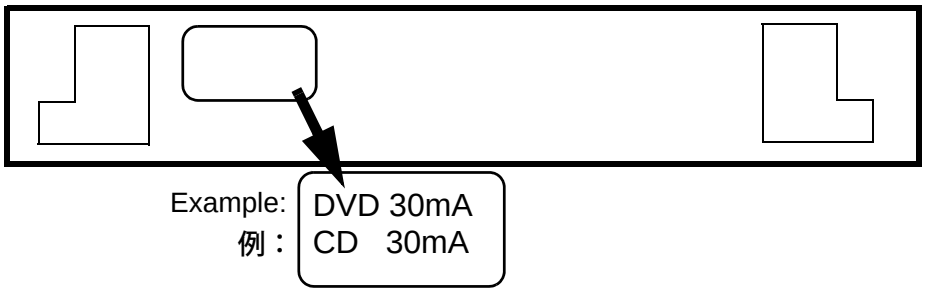


Disc no read,unsteady playback, etc.

↓

Laser drive current check
HF wave form check
(Refer to page 109)

↓

Present value exceeds the initial value by 1.5 times

↓

Traverse Unit replacing
(See page 7 for details)

↓

Laser current registering after replacement.

Step: Disc playback
Write the measured value on the seal attached to the Mecha. Unit
*As to the measuring method, refer to page 10,11.

ディスクを読み込まない
スムーズに再生しない、等

↓

レーザー駆動電流の確認
ＨＦ 波形の確認
（109 ページ参照）

↓

現在値が初期値の
1.5 倍になっている

↓

トラバースユニット交換
（詳細は 7 ページ）

↓

交換後のレーザー電流記入

手順　：ディスクを再生
その時の Iop 値をメカ後方のシールの上に重ねて貼る等で更新する。
*Iop の測定方法は、10,11 ページ参照。

## 1. Label Indication of DVD Mechanism.

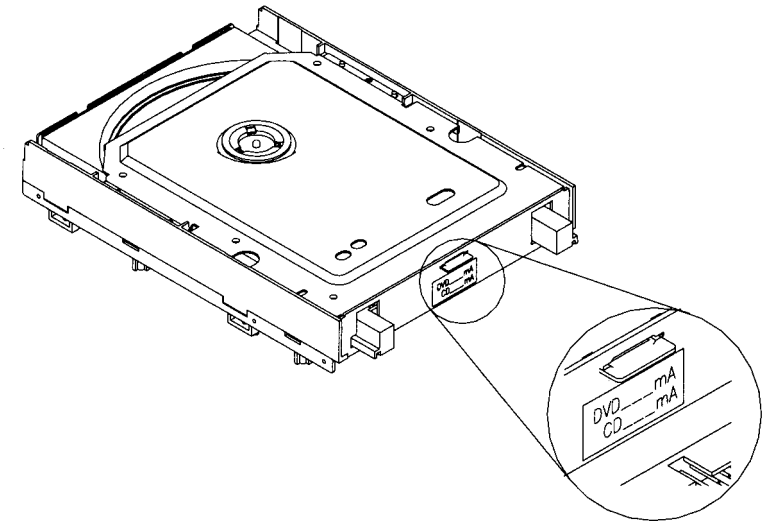


Laser current consumption value

ex) DVD ＊＊＊ mA, CD ＊＊＊ mA

## 1.DVD メカのラベル表示

レーザー駆動電流値

例）DVD ＊＊＊ mA, CD ＊＊＊ mA

## 2. Note for Handling the Laser Pick-Up

the protection for the damage of laser diode.

If you want to change the optical device unit from any other units, you must keep the following.

(1) It should be done at the desk already took measures the static electricity in care of removing the OPU's (Optical device unit) connector cable.
(2) Workers should be put on the "Earth Band".
(3) It should be done to add the solder to the short land to prevent the broken Laser diode before removing the 24P FFC cable.
(4) Don't touch OPU's connector parts carelessly.

## 2.レーザーピックアップの取扱注意

レーザーダイオードの破壊防止。

光素子ユニットを交換するときは、以下を遵守してください。

(1) 光素子ユニットの接続ケーブルをはずすときは、静電対策を行ったデスク上で作業してください。
(2) 作業者は、リストストラップを使用してください。
(3) レーザーダイオードの破壊防止のため、24P FFC ケーブルをはずす前にランドを半田付けショートしてください。
(4) 光素子ユニットのコネクタ部に触れないでください。

## 3. Replacement of the Laser Pick-up (Traverse Unit)

Check the Iop(Laser drive current)

If the present Iop (current) value exceeds.+50% of the initial value, replace the Traverse unit(Laser Pick-up) with a new one.

## 3.レーザーピックアップ ( トラバースユニット ) の交換

Iop( レーザー駆動電流）をチェックします。

現在の Iop 値が初期値の 50%を越えている場合、トラバースユニット（レーザーピックアップ）を交換してください。

## 4. Iop Measurement Method

When measuring Laser drive current (Iop), playback the discs (CD,DVD) described below, measure Iop for CD Laser and DVD Laser by the test point (+5V-A2 -- LD(CD),LD(DVD))on the Main P.W.B.

Test Disc :DVD/DVDT-S01 or commercially available discs.
:CD/TCD-784 (manufactured by ALMEDIO INC) or commercially available discs.

## 4.Iop の測定方法

レーザー駆動電流を測定する場合、下記のディスク (CD,DVD) を再生します。

Main基板上のテストポイント(+5V-A2～LD(CD),LD(DVD)) にて、CD レーザーと DVD レーザーの Iop を測定してください。

テストディスク：DVD/DVDT-S01 または市販同等ディスク
：CD/TCD-784（ALMEDIO 社製）または市販同等ディスク

## 4.1. DVD Laser current measurement

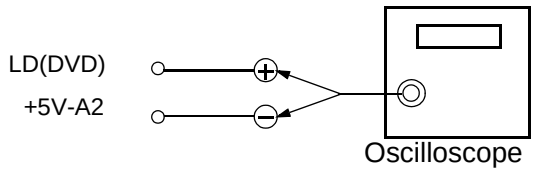


(1) Connect the oscilloscope to +5V-A2 of test point for GND side and LD(DVD) of test point for signal side.
(2) Playback the title 1 / chapter 1 of the DVD Test Disc.
(3) Measure the voltage between +5V-A2 and LD(DVD), calculate Iop by the formula as shown below.

$$Iop = \frac{\text{Measurement Voltage Value}}{14 \text{ (Resistance value)}}$$

## 4.1. DVD レーザー電流測定

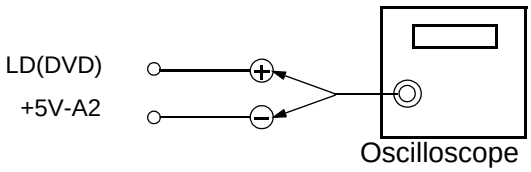


(1) オシロスコープをテストポイント +5V-A2(GND) と LD(DVD)( 信号 ) へ接続します。
(2) DVD テストディスクのタイトル 1・チャプター 1 を再生します。
(3) +5V-A2 と LD(DVD) 間の電圧を測定し、次式により Iop を算出します。

$$Iop = \frac{\text{測定電圧値}}{14\text{(抵抗値)}}$$

## 4.2. CD Laser current measurement

(1) Connect the oscilloscope to +5V-A2 of test point for GND side and LD(CD) of test point for signal side.
(2) Playback the track 1 of the CD Test Disc.
(3) Measure the voltage between +5V-A2 and LD(CD), calculate Iop by the formula as shown below.

$$Iop = \frac{\text{Measurement Voltage Value}}{11.75 \text{ (Resistance value)}}$$

## 4.2. CD レーザー電流測定

(1) オシロスコープをテストポイント +5V-A2(GND) と LD(CD)( 信号 ) へ接続します。
(2) CD テストディスクのトラック 1 を再生します。
(3) +5V-A2 と LD(CD) 間の電圧を測定し、次式より Iop を算出します。

$$Iop = \frac{\text{測定電圧値}}{11.75\text{(抵抗値)}}$$

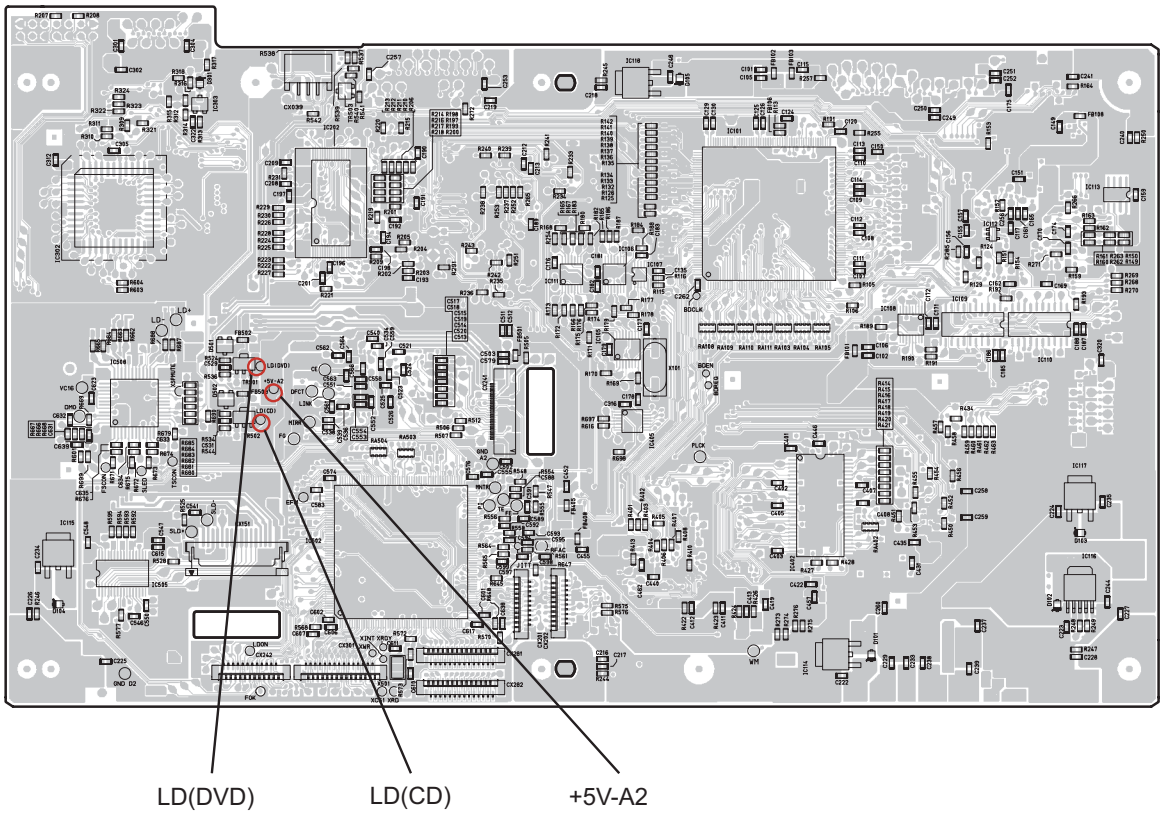


Main Unit foil side

## 5. Optical Pick-up Diagnostics and Replacement

When repairing, carry out failure diagnostics by following the procedure described below.
If the present value of the laser drive current is 50% up to initial value, it is the point of the pickup replacement.
In case of the pickup replacement, replace the Traverse Unit with no adjustment.
The initial value is indicated on the label on back side of Mecha.

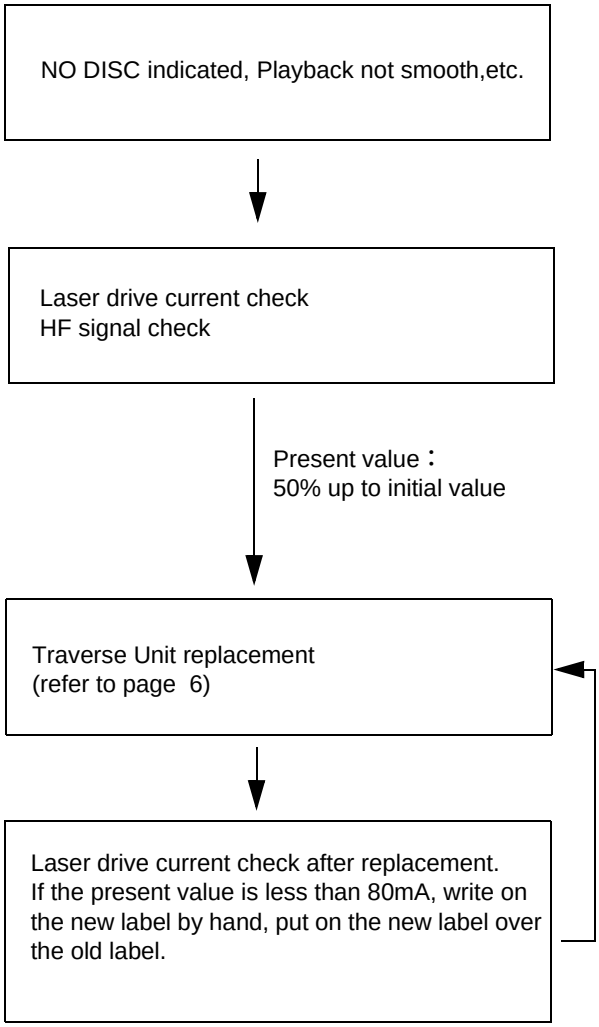


If the present value exceeds 80mA, replace the Traverse Unit a new one.
Cause: Damaged electrostatically when replaced.

## 5.光ピックアップ診断と交換

交換時､以下の手順で故障診断を行ってください。
レーザー駆動電流の現在値が初期値の 50%以上なら、ピックアップを交換すべきです。
ピックアップ交換の場合はトラバースユニットを交換し、調整は不要です。
初期値は、メカ後部のラベルに表示されています。

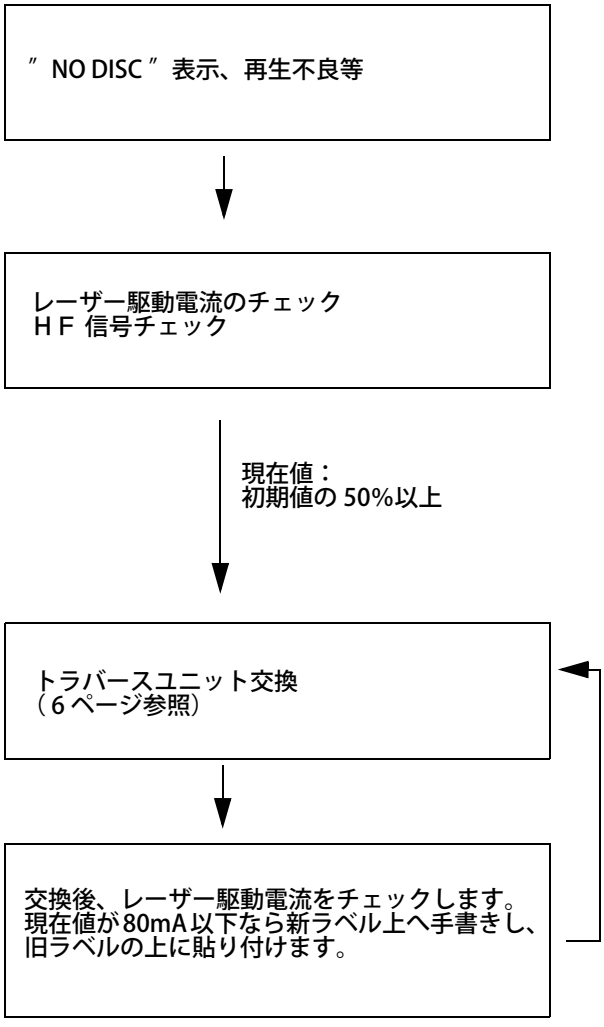


現在値が 80mA 以上なら、再度トラバースユニットを交換してください。
原因　：交換時、静電破壊された。

# SERVICE MODE

## 1. Aging Mode

### (1) preparation

(a) Equipment used: Any one of DVD Karaoke Disc (containing more than 10 titles).

(b) Unit setting : No spec other than the following procedure (Aging mode).
At the tray open status, press the “POWER” button to turn on the power while pressing the “PLAY” and “OPEN/CLOSE” buttons for DVD operation simultaneously. ▶▮▮ mark on the FL lights, and the unit is set to the heat run mode.

### (2) procedure

(a) According the above, set to the aging mode.

(b) Set a DVD Karaoke disc to the tray and press the “PLAY” button twice. ▮▮ mark on the FL blinks, and aging operation(after playback title-1 and title-10 of the disc, the tray open/close is made automatically, then playback the title-1 again) starts. This aging operation continues automatically until it is stopped or it stops caused by an error.In case of some error in DVD, the following error messages are displayed on the FL.

| No | Error contents | FL display |
|---|---|---|
| 1 | Bad Disc | ERROR 02 |
| 2 | Focus Error | ERROR 02 |
| 3 | Read Error | ERROR 02 |
| 4 | Tracking Error | ERROR 04 |
| 5 | Tray Error | ERROR 05 |
| 6 | Navigation Pack Read Error | ERROR 06 |

# サービスモードについて

## 1.エージングモード

### (1) 準備

(a) 使用機器：DVD カラオケディスク（10 タイトル以上の物）。

(b) 本体設定：下記設定以外規定無。
（エージングモード）
トレイを開けた状態で DVD ユニットの「再生ボタン」+「開 / 閉ボタン」を同時に押しながら「電源ボタン」を押してセットの電源を入れると、FL 管の ▶▮▮ マークが点灯し、ヒートランモードに設定される。

### (2) 手順

(a) 上記手順でエージングモードに設定する。

(b) トレイに DVD カラオケディスクを入れ、「再生ボタン」を 2 回押して、FL 管の ▮▮ マークが点滅になると、「ディスクのタイトル 1 とタイトル 10 を再生した後、トレイを自動で開 / 閉し、再度タイトル 1 の再生を行う。」エージング動作になります。停止させるか、エラーにて停止するまでこの動作を自動で繰り返します。DVD 部にエラーが発生した場合は、FL 管に下表のエラーが表示されます。

| No. | エラー内容 | FL 管表示 |
|---|---|---|
| 1 | 不良ディスク | ERROR 02 |
| 2 | フォーカスエラー | ERROR 02 |
| 3 | リードエラー | ERROR 02 |
| 4 | トラッキングエラー | ERROR 04 |
| 5 | トレイエラー | ERROR 05 |
| 6 | ナビゲーションパックエラー | ERROR 06 |

## 2. Initial Setting Mode

### (1) Preparation

(a) Equipment used: None

(b) Unit setting: No spec other than the following procedure

### (2) Procedure

(a) Initialize the DVD player when μcom, peripheral parts of μcom, or Main P.W.B. has been replaced in servicing.

(b) Carry out the following to restore factory setting mode. At the player stop condition, press 3 buttons for DVD operation(“PLAY”,”OPEN/CLOSE”, and “ ▶▶▮ SKIP”) until “INITIALIZE” appears and disappears in the FL.
(“Initialized” appears and disappears on the TV screen.)

(c) All user setting will be lost and its factory setting will be restored when this initialization is made. Be sure to memorize your setting for restoring again after the initialization.

## 2.初期設定モード

### (1) 準備

(a) 使用機器：無

(b) 本体設定：下記手順以外規定無。

### (2) 手順

(a) サービスにて、マイコンやマイコン周辺部分やメイン基板を交換した場合は、ＤＶＤ プレーヤーの初期化を行ってください。

(b) セットの初期化を下記の手順で行い、工場出荷モードに設定する。
セットが停止状態にて、ＤＶＤ 操作部の「再生ボタン」+「開 / 閉ボタン」+「 ▶▶▮ ( スキップ）ボタン」の 3 重押しを ＦＬ 管に "INITIALIZE" が表示され消えるまで押します。（ＴＶ 画面には”初期化しました”が表示され消えます。）

(c) 初期化を行うとお客様が設定した内容が工場出荷状態に戻りますので、あらかじめ設定内容を控えておき初期化後に再設定してください。

## 3. μ-Com Firm Check Mode

### (1) Preparation

(a) Equipment used: None

(b) Unit setting: No spec other than the following procedure.

### (2) Procedure

(a) Press the “POWER” button to turn on the power while pressing the “PLAY” and “OPEN/CLOSE” buttons for DVD operation simultaneously.

(b) FL all light mode.
This mode is for detecting FL defects. Press “STILL/PAUSE ▮▮ ” on the remote control unit once to light all FL segments.

(c) DVD μcom and main unit μcom firm check mode. This mode is for displaying the status of each μcom employed.

- DVD μcom firm: Press the “MENU” button or ◀◀ , ▶▶ button.
- Each time the “MENU” button or ◀◀ , ▶▶ button on the remote control unit is pressed, μcom firm is displayed one after another.

Ex.: [DRV 030307, B/E 6237,PANEL 6236]

| | Set Serial No. (lower 5 digits) | Drive μcom | B/E μcom | Panel μcom |
|---|---|---|---|---|
| 1 | 00001- | Ver.030307 (Display) 030307 | Ver.6237 (Display) 6237 | Ver.6236 (Display) 6236 |
| 2 | | | | |
| 3 | | | | |
| 4 | | | | |

## 3.マイコンファームチェックモード

### (1) 準備

(a) 使用機器：無

(b) 本体設定：下記手順以外規定無。

### (2) 手順

(a) ＤＶＤ 操作部の「再生ボタン」と「開 / 閉ボタン」を押しながらセットの「電源ボタン」を押し電源を入れます。

(b) ＦＬ 管全点灯モード。
ＦＬ 管の故障判別用のモードで、リモコンの「スティル / ポーズ ▮▮ ボタン」を押すと ＦＬ 管が全点灯します。

(c) ＤＶＤ マイコン及び本体マイコンのファーム確認モード
搭載されている各マイコンのファーム状態を表示します。

・ ＤＶＤ マイコンのファーム：リモコンの「メニューボタン」または ◀◀ 、▶▶ ボタンを押します。

・ リモコンのメニューボタンまたは ◀◀ 、▶▶ ボタンを押すたびにマイコンファームを次々と表示します。
表示例：〔DRV 030307 、B/E 6237 、PANEL 6236〕

| | セットのシリアル番号 ( 下 5 桁 ) | ドライブマイコン | B/Eマイコン | パネルマイコン |
|---|---|---|---|---|
| 1 | 00001 ～ | Ver.030307 ( 表示 )030307 | Ver.6237 ( 表示 )6237 | Ver.6236 ( 表示 )6236 |
| 2 | | | | |
| 3 | | | | |
| 4 | | | | |

## 4. Setting up the test mode

### (1) Setting up

• In order to set up the test mode, you press STOP button and REV button simultaneously in the heat-run mode.Fundamentaly, you can set up the test mode at the stop state after disc loading. (Heat-run mode is set up by pressing PLAY button,holding OPEN/CLOSE button. If it becomes heat run mode, PLAY indicator and PAUSE indicator will light up.)

LOADING display
↓

| FL display (The display part of 13 digits) | | | | | | | | | | | | |
|---|---|---|---|---|---|---|---|---|---|---|---|---|
| 1 | 2 | 3 | 4 | 5 | 6 | 7 | 8 | 9 | 10 | 11 | 12 | 13 |
| T | | | | | | | | | | | | |

### (2) Mode Select

• There are two, servo adjustment value display mode and trace mode (error rate display), in the mode.

(a) If the REV button or the FWD button is pushed in the test mode, it will become servo adjustment value display mode.

| FL display (The display part of 13 digits) | | | | | | | | | | | | |
|---|---|---|---|---|---|---|---|---|---|---|---|---|
| 1 | 2 | 3 | 4 | 5 | 6 | 7 | 8 | 9 | 10 | 11 | 12 | 13 |
| T | 3 | | | | | | | | | | | |

(b) If the REV button or the FWD button is pushed again, it will become the trace mode (error rate display).

| FL display (The display part of 13 digits) | | | | | | | | | | | | |
|---|---|---|---|---|---|---|---|---|---|---|---|---|
| 1 | 2 | 3 | 4 | 5 | 6 | 7 | 8 | 9 | 10 | 11 | 12 | 13 |
| T | 7 | | | | | | | | | | | |

### (3) Mode decision

• The mode will be decided if the PLAY button is pushed in the state where the mode is chosen.

(a) In the case of servo adjustment value display mode, a focus offset adjustment value is displayed.

| FL display (The display part of 13 digits) | | | | | | | | | | | | |
|---|---|---|---|---|---|---|---|---|---|---|---|---|
| 1 | 2 | 3 | 4 | 5 | 6 | 7 | 8 | 9 | 10 | 11 | 12 | 13 |
| T | 3 | 1 | n | n | n | n | n | n | n | n | n | n |

(n:adjustment value)

(b) In the case of trace mode (error rate display), trace of the circumference in one layer is chosen.

| FL display (The display part of 13 digits) | | | | | | | | | | | | |
|---|---|---|---|---|---|---|---|---|---|---|---|---|
| 1 | 2 | 3 | 4 | 5 | 6 | 7 | 8 | 9 | 10 | 11 | 12 | 13 |
| T | 7 | 1 | F | F | F | F | F | F | F | F | F | F |

(F: An address and an error rate display F at the time of undecided.)

### (4) Change within the mode

• If the REV button or the FWD button is pushed in the state where the mode is decided, a change within the mode will be made.

(a) In the case of servo adjustment value display mode (refer to table 1 servo adjustment value display mode details)

| FL display (The display part of 13 digits) | | | | | | | | | | | | |
|---|---|---|---|---|---|---|---|---|---|---|---|---|
| 1 | 2 | 3 | 4 | 5 | 6 | 7 | 8 | 9 | 10 | 11 | 12 | 13 |
| T | X | X | n | n | n | n | n | n | n | n | n | n |

(XX:selection mode [31--62] n:adjustment value)

## 4. テストモード

### (1) テストモードへの投入

・ テストモードへの投入はヒートランモード時に STOP キーと REV キーを 2 重押しすることで行う。基本的にディスクローディング後の停止状態でテストモードに投入する。( ヒートランモードへの投入は OPEN/CLOSE キーと PLAY キーを 2 重押しすることで行う。ヒートランモードになると PLAY インジケータと PAUSE インジケータが点灯する。)

LOADING 表示
↓

| FL 管の表示 (13 桁の表示部 ) | | | | | | | | | | | | |
|---|---|---|---|---|---|---|---|---|---|---|---|---|
| 1 | 2 | 3 | 4 | 5 | 6 | 7 | 8 | 9 | 10 | 11 | 12 | 13 |
| T | | | | | | | | | | | | |

### (2) モードの選択

・ モードには、サーボ調整値表示モードとトレースモード ( エラーレート表示 ) の 2 つがある。

(a) テストモード投入後に REV キー又は FWD キーを押すと、サーボ調整値表示モードになる。

| FL 管の表示 (13 桁の表示部 ) | | | | | | | | | | | | |
|---|---|---|---|---|---|---|---|---|---|---|---|---|
| 1 | 2 | 3 | 4 | 5 | 6 | 7 | 8 | 9 | 10 | 11 | 12 | 13 |
| T | 3 | | | | | | | | | | | |

(b) 再度 REV キー又は FWD キーを押すとトレースモード ( エラーレート表示 ) になる。

| FL 管の表示 (13 桁の表示部 ) | | | | | | | | | | | | |
|---|---|---|---|---|---|---|---|---|---|---|---|---|
| 1 | 2 | 3 | 4 | 5 | 6 | 7 | 8 | 9 | 10 | 11 | 12 | 13 |
| T | 7 | | | | | | | | | | | |

### (3) モードの確定

・ モードを選択してある状態で PLAY キーを押すとモードを確定する。

(a) サーボ調整値表示モードの場合は、フォーカスオフセット調整値を表示する。

| FL 管の表示 (13 桁の表示部 ) | | | | | | | | | | | | |
|---|---|---|---|---|---|---|---|---|---|---|---|---|
| 1 | 2 | 3 | 4 | 5 | 6 | 7 | 8 | 9 | 10 | 11 | 12 | 13 |
| T | 3 | 1 | n | n | n | n | n | n | n | n | n | n |

(n: 調整値 )

(b) トレースモード ( エラーレート表示 ) の場合は、 1 層内周のトレースを選択する。

| FL 管の表示 (13 桁の表示部 ) | | | | | | | | | | | | |
|---|---|---|---|---|---|---|---|---|---|---|---|---|
| 1 | 2 | 3 | 4 | 5 | 6 | 7 | 8 | 9 | 10 | 11 | 12 | 13 |
| T | 7 | 1 | F | F | F | F | F | F | F | F | F | F |

(F : アドレス及びエラーレートは未確定時、F を表示する。)

### (4) モード内での変更

・ モードを確定してある状態で REV キー又は FWD キーを押すとモード内での変更を行う。

(a) サーボ調整値表示モードの場合 ( 表 1 サーボ調整値表示モード詳細 参照)

| FL 管の表示 (13 桁の表示部 ) | | | | | | | | | | | | |
|---|---|---|---|---|---|---|---|---|---|---|---|---|
| 1 | 2 | 3 | 4 | 5 | 6 | 7 | 8 | 9 | 10 | 11 | 12 | 13 |
| T | X | X | n | n | n | n | n | n | n | n | n | n |

(X X : 選択モード [31 ～ 62]、n: 調整値 )

(b) In the case of trace mode (error rate display) (refer to table 2 trace mode details)

| FL display (The display part of 13 digits) | | | | | | | | | | | | |
|---|---|---|---|---|---|---|---|---|---|---|---|---|
| 1 | 2 | 3 | 4 | 5 | 6 | 7 | 8 | 9 | 10 | 11 | 12 | 13 |
| T | Y | Y | F | F | F | F | F | F | F | F | F | F |

(YY: select mode [71--94] ,F: address and an error rate display F at the time of undecided)

(5) Execution of trace mode (error rate display) (refer to table 2 trace mode details)

• Trace will be performed if the PLAY button is pushed after choosing operation.

| FL display (The display part of 13 digits) | | | | | | | | | | | | |
|---|---|---|---|---|---|---|---|---|---|---|---|---|
| 1 | 2 | 3 | 4 | 5 | 6 | 7 | 8 | 9 | 10 | 11 | 12 | 13 |
| T | Y | Y | m | m | m | m | m | m | l | l | l | l |

(YY:select mode[71--94],m:address[PBA][HEX],
l:error rate[COUNT/SEC][HEX])

(Note) Renewal of data is carried out for every CD:300 frame and DVD:85ECC block.

• The mode chosen when selection mode was changed into the trace execution and the PLAY button was pushed is performed from the beginning.When the PLAY button is pushed without changing selection mode, the mode under selection is performed from the beginning.(If the PLAY button is pushed, the address corresponding to the chosen mode will be searched again.)

(6) Other operation

(a) If the STOP button is pushed into servo adjustment value display mode and trace mode (error rate display), it will return to the state at the time of a test mode injection.

| FL display (The display part of 13 digits) | | | | | | | | | | | | |
|---|---|---|---|---|---|---|---|---|---|---|---|---|
| 1 | 2 | 3 | 4 | 5 | 6 | 7 | 8 | 9 | 10 | 11 | 12 | 13 |
| T | | | | | | | | | | | | |

(b) Push the OPEN/CLOSE button twice and carry out servo readjustment in OPEN operation ->CLOSE operation.

(It readjusts with test mode.)

OPEN display

↓

CLOSE display

↓

LOADING display

↓

| FL display (The display part of 13 digits) | | | | | | | | | | | | |
|---|---|---|---|---|---|---|---|---|---|---|---|---|
| 1 | 2 | 3 | 4 | 5 | 6 | 7 | 8 | 9 | 10 | 11 | 12 | 13 |
| T | | | | | | | | | | | | |

(c) By pressing STOP button and REV button simultaneously in the test mode, it returns to heat-run mode.

(b) トレースモード ( エラーレート表示 ) の場合（ 表 2 トレースモード詳細 参照）

| FL 管の表示 (13 桁の表示部 ) | | | | | | | | | | | | |
|---|---|---|---|---|---|---|---|---|---|---|---|---|
| 1 | 2 | 3 | 4 | 5 | 6 | 7 | 8 | 9 | 10 | 11 | 12 | 13 |
| T | Y | Y | F | F | F | F | F | F | F | F | F | F |

（ＹＹ: 選択モード [71 ～ 94]、Ｆ: アドレス及びエラーレートは未確定時、Ｆ を表示する。）

(5) トレースモード ( エラーレート表示 ) の実行（ 表 2 トレースモード詳細 参照）

・ 動作を選択した後、PLAY キーを押すとトレースを実行する。

| FL 管の表示 (13 桁の表示部 ) | | | | | | | | | | | | |
|---|---|---|---|---|---|---|---|---|---|---|---|---|
| 1 | 2 | 3 | 4 | 5 | 6 | 7 | 8 | 9 | 10 | 11 | 12 | 13 |
| T | Y | Y | m | m | m | m | m | m | l | l | l | l |

（ＹＹ: 選択モード [71 ～ 94]、m: アドレス [PBA][HEX]、
l : エラーレート [COUNT/SEC][HEX]）
( 注 )CD:300 フレーム ,DVD:85ECC ブロック毎にデータ更新する。

・ トレース実行中に選択モードを変更し、PLAY キーを押すと選択したモードを最初から実行する。選択モードを変更せずに PLAY キーを押した場合も、選択中のモードを最初から実行する。
（PLAY キーを押したら、選択しているモードに対応したアドレスを再度サーチする。）

(6) その他の動作

(a) サーボ調整値表示モード、トレースモード ( エラーレート表示 ) 中に STOP キーを押すとテストモード投入時の状態に戻る。

| FL 管の表示 (13 桁の表示部 ) | | | | | | | | | | | | |
|---|---|---|---|---|---|---|---|---|---|---|---|---|
| 1 | 2 | 3 | 4 | 5 | 6 | 7 | 8 | 9 | 10 | 11 | 12 | 13 |
| T | | | | | | | | | | | | |

(b) OPEN/CLOSE キーを 2 回押して、OPEN 動作→ CLOSE 動作で、サーボ再調整する。
( テストモードのまま再調整する。)

OPEN 表示

↓

CLOSE 表示

↓

LOADING 表示

↓

| FL 管の表示 (13 桁の表示部 ) | | | | | | | | | | | | |
|---|---|---|---|---|---|---|---|---|---|---|---|---|
| 1 | 2 | 3 | 4 | 5 | 6 | 7 | 8 | 9 | 10 | 11 | 12 | 13 |
| T | | | | | | | | | | | | |

(c) テストモード中に STOP キーと REV キーの 2 重押し ( 投入時と同じキー ) で、ヒートランモードに戻る。

## (7) Test mode detailed table

Table 1: servo adjustment value display mode details

| X X | Contents | Contents supplement | Contents explanation |
|---|---|---|---|
| 31 | RFP FE Offset | layer 0 | PI of CXD1881AR An offset value and FE An offset value is displayed.<br>Pi offset is shown in higher rank 1Byte.<br>FE offset is shown in low rank 1Byte. |
| 32 | RFP TE Bal Gain | layer 0 | TE balance gain value of CXD1881AR is displayed. |
| 33 | RFP TE Output Gain | layer 0 | TE output gain value of CXD1881AR is displayed. |
| 34 | RFP TE Offset | layer 0 | TE offset value of CXD1881AR is displayed. |
| 35 | DSP TE Offset | layer 0 | TE offset value inside CXD1885Q is displayed. |
| 36 | Fcs Bias | layer 0 | The focus bias value inside CXD1885Q is displayed. |
| 37 | Fcs AGC | layer 0 | The inside focus gain (setting 0x2000 to 1) value of CXD1885Q is displayed.。<br>Therefore, 0x1FF2 and in the case of 0x2012, it is as follows.<br>0x1FF2(8178) / 0x2000(8192) = 0.998291015625(fold)<br>0x2012(8210) / 0x2000(8192) = 1.002197265625(fold)<br>Notes: The inside of ( ) is a decimal system equivalent. |
| 38 | Trk AGC | layer 0 | The inside tracking gain (setting 0x2000 to 1) value of CXD1885Q is displayed.。<br>Therefore, 0x1FF2 and in the case of 0x2012, it is as follows.<br>0x1FF2(8178) / 0x2000(8192) = 0.998291015625(fold)<br>0x2012(8210) / 0x2000(8192) = 1.002197265625(fold)<br>Notes: The inside of ( ) is a decimal system equivalent |
| 39 | Pi Offset | layer 0 | It is the parameter calculated inside CXD1885Q.<br>The value displayed on a set serves as the number of complement of 2 of 2Bytes(es) doubled 256.<br>A voltage value is 6.25mV per bit. |
| 40 | FE Offset | layer 0 | It is the parameter calculated inside CXD1885Q.<br>The value displayed on a set serves as the number of complement of 2 of 2Bytes(es) doubled 256.<br>A voltage value is 6.25mV per bit. |
| 41 | SE Offset | layer 0 | It is the parameter calculated inside CXD1885Q.<br>The value displayed on a set serves as the number of complement of 2 of 2Bytes(es) doubled 256.<br>A voltage value is 6.25mV per bit. |
| 42 | RFP FE Offset | layer 1 | PI of CXD1881AR An offset value and FE An offset value is displayed.<br>Pi offset is shown in higher rank 1Byte.<br>FE offset is shown in low rank 1Byte. |
| 43 | RFP TE Bal Gain | layer 1 | TE balance gain value of CXD1881AR is displayed. |
| 44 | RFP TE Output Gain | layer 1 | TE output gain value of CXD1881AR is displayed. |
| 45 | RFP TE Offset | layer 1 | TE offset value of CXD1881AR is displayed. |
| 46 | DSP TE Offset | layer 1 | It is the parameter calculated inside CXD1885Q.<br>The value displayed on a set serves as the number of complement of 2 of 2Bytes(es) doubled 256.<br>A voltage value is 6.25mV per bit. |
| 47 | Fcs Bias | layer 1 | It is the parameter calculated inside CXD1885Q.<br>The value displayed on a set serves as the number of complement of 2 of 2Bytes(es) doubled 256.<br>A voltage value is 6.25mV per bit. |

## (7) テストモード詳細一覧表

表 1 サーボ調整値表示モード詳細

| X X | 内容 | 内容補足 | 内容説明 |
|---|---|---|---|
| 31 | RFP FE Offset | レイヤ 0 | CXD1881AR の PI オフセット値と FE オフセット値を表示。<br>上位 1Byte に Pi オフセットを示す。<br>下位 1Byte に FE オフセットを示す。 |
| 32 | RFP TE Bal Gain | レイヤ 0 | CXD1881ARのTE バランスゲイン値を表示す。 |
| 33 | RFP TE Output Gain | レイヤ 0 | CXD1881ARのTE 出力ゲイン値を表示す。 |
| 34 | RFP TE Offset | レイヤ 0 | CXD1881AR の TE オフセット値を表示。 |
| 35 | DSP TE Offset | レイヤ 0 | CXD1885Q 内部の TE オフセット値を表示。 |
| 36 | Fcs Bias | レイヤ 0 | CXD1885Q 内部のフォーカスバイアス値を表示。 |
| 37 | Fcs AGC | レイヤ 0 | CXD1885Q 内部フォーカスゲイン (0x2000 を 1 として ) 値を表示。<br>0x1FF2 や 0x2012 の場合、以下のようになる。<br>0x1FF2(8178) / 0x2000(8192) = 0.998291015625( 倍 )<br>0x2012(8210) / 0x2000(8192) = 1.002197265625( 倍 )<br>注 :( ) 内は 10 進換算値 |
| 38 | Trk AGC | レイヤ 0 | CXD1885Q内部トラッキングゲイン(0x2000 を 1 として ) 値を表示。<br>0x1FF2 や 0x2012 の場合、以下のようになる。<br>0x1FF2(8178) / 0x2000(8192) = 0.998291015625( 倍 )<br>0x2012(8210) / 0x2000(8192) = 1.002197265625( 倍 )<br>注 :( ) 内は 10 進換算値 |
| 39 | Pi Offset | レイヤ 0 | CXD1885Q 内部で計算されるパラメータ。<br>セットに表示される値は、256 倍された 2Bytes の 2 の補数となる。<br>電圧値は 1bit あたり 6.25mV。 |
| 40 | FE Offset | レイヤ 0 | CXD1885Q 内部で計算されるパラメータ。<br>セットに表示される値は、256 倍された 2Bytes の 2 の補数となる。<br>電圧値は 1bit あたり 6.25mV。 |
| 41 | SE Offset | レイヤ 0 | CXD1885Q 内部で計算されるパラメータ。<br>セットに表示される値は、256 倍された 2Bytes の 2 の補数となる。<br>電圧値は 1bit あたり 6.25mV。 |
| 42 | RFP FE Offset | レイヤ 1 | CXD1881AR の PI オフセット値と FE オフセット値を表示。<br>上位 1Byte に Pi オフセットを示す。<br>下位 1Byte に FE オフセットを示す。 |
| 43 | RFP TE Bal Gain | レイヤ 1 | CXD1881ARのTE バランスゲイン値を表示。 |
| 44 | RFP TE Output Gain | レイヤ 1 | CXD1881AR の TE 出力ゲイン値を表示。 |
| 45 | RFP TE Offset | レイヤ 1 | CXD1881AR の TE オフセット値を表示。 |
| 46 | DSP TE Offset | レイヤ 1 | CXD1885Q 内部で計算されるパラメータ。<br>セットに表示される値は、256 倍された 2Bytes の 2 の補数となる。<br>電圧値は 1bit あたり 6.25mV。 |
| 47 | Fcs Bias | レイヤ 1 | CXD1885Q 内部で計算されるパラメータ。<br>セットに表示される値は、256 倍された 2Bytes の 2 の補数となる。<br>電圧値は 1bit あたり 6.25mV。 |

| | | | |
|---|---|---|---|
| 48 | Fcs AGC | layer 1 | The inside focus gain (setting 0x2000 to 1) value of CXD1885Q is displayed.<br>Therefore, 0x1FF2 and in the case of 0x2012, it is as follows.<br>0x1FF2(8178) / 0x2000(8192) = 0.998291015625(fold)<br>0x2012(8210) / 0x2000(8192) = 1.002197265625(fold)<br>Notes: The inside of ( ) is a decimal system equivalent. |
| 49 | Trk AGC | layer 1 | The inside tracking gain (setting 0x2000 to 1) value of CXD1885Q is displayed.<br>Therefore, 0x1FF2 and in the case of 0x2012, it is as follows.<br>0x1FF2(8178) / 0x2000(8192) = 0.998291015625(fold)<br>0x2012(8210) / 0x2000(8192) = 1.002197265625(fold)<br>Notes: The inside of ( ) is a decimal system equivalent |
| 50 | Pi Offset | layer 1 | It is the parameter calculated inside CXD1885Q.<br>The value displayed on a set serves as the number of complement of 2 of 2Bytes(es) doubled 256.<br>A voltage value is 6.25mV per bit. |
| 51 | FE Offset | layer 1 | It is the parameter calculated inside CXD1885Q.<br>The value displayed on a set serves as the number of complement of 2 of 2Bytes(es) doubled 256.<br>A voltage value is 6.25mV per bit. |
| 52 | SE Offset | layer 1 | It is the parameter calculated inside CXD1885Q.<br>The value displayed on a set serves as the number of complement of 2 of 2Bytes(es) doubled 256.<br>A voltage value is 6.25mV per bit. |
| 53 | PO error detection number | Error rate | It is invalid at the time of CD operation. |
| 54 | PO uncorrect-able error number | Error Rate | It is invalid at the time of CD operation. |
| 55 | PI error detec-tion number | Error Rate | CD : C1 error detection number |
| 56 | PI uncorrect-able error number | Error Rate | CD : C2 uncorrectable error number |
| 57 | Mirr Count | Disc dis-criminant | They are the contents at the time of disk distinction.<br>Please refer to "Table 3 Disc distinction information" about the contents of a value. |
| 58 | Mirr Width | Disc dis-criminant | They are the contents at the time of disk distinction.<br>Please refer to "Table 3 Disc distinction information" about the contents of a value. |
| 59 | FZC Count | Disc dis-criminant | They are the contents at the time of disk distinction.<br>Please refer to "Table 3 Disc distinction information" about the contents of a value. |
| 60 | Pi Level | Disc dis-criminant | They are the contents at the time of disk distinction.<br>Please refer to "Table 3 Disc distinction information" about the contents of a value. |
| 61 | Disc Type | Disc Type | They are the contents at the time of disk type.<br>Please refer to "Table 4 Disc classification information" about the contents of a value. |
| 62 | PO error detection number and address | Error rate | PO error detection number is invalid at the time of CD operation. |

| | | | |
|---|---|---|---|
| 48 | Fcs AGC | レイヤ 1 | CXD1885Q 内部フォーカスゲイン (0x2000 を 1 として ) 値を表示。<br>0x1FF2 や 0x2012 の場合、以下のようになる。<br>0x1FF2(8178) / 0x2000(8192) = 0.998291015625( 倍 )<br>0x2012(8210) / 0x2000(8192) = 1.002197265625( 倍 )<br>注 :( ) 内は 10 進換算値 |
| 49 | Trk AGC | レイヤ 1 | CXD1885Q 内部トラッキングゲイン (0x2000 を 1 として ) 値を表示。<br>0x1FF2 や 0x2012 の場合、以下のようになる。<br>0x1FF2(8178) / 0x2000(8192) = 0.998291015625( 倍 )<br>0x2012(8210) / 0x2000(8192) = 1.002197265625( 倍 )<br>注 :( ) 内は 10 進換算値 |
| 50 | Pi Offset | レイヤ 1 | CXD1885Q 内部で計算されるパラメータ。<br>セットに表示される値は、256 倍された 2Bytes の 2 の補数となる。<br>電圧値は 1bit あたり 6.25mV。 |
| 51 | FE Offset | レイヤ 1 | CXD1885Q 内部で計算されるパラメータ。<br>セットに表示される値は、256 倍された 2Bytes の 2 の補数となる。<br>電圧値は 1bit あたり 6.25mV。 |
| 52 | SE Offset | レイヤ 1 | CXD1885Q 内部で計算されるパラメータ。<br>セットに表示される値は、256 倍された 2Bytes の 2 の補数となる。<br>電圧値は 1bit あたり 6.25mV。 |
| 53 | PO 誤り検出数 | エラーレート | CD 時は無効。 |
| 54 | PO 訂正不可数 | エラーレート | CD 時は無効。 |
| 55 | PI 誤り検出数 | エラーレート | CD 時は C1 誤り検出数。 |
| 56 | PI 訂正不可数 | エラーレート | CD 時は C2 訂正不可数。 |
| 57 | Mirr Count | ディスク判別 | ディスク判別時の内容。<br>値の内容は「表 3 ディスク判別情報」を参照。 |
| 58 | Mirr Width | ディスク判別 | ディスク判別時の内容。<br>値の内容は「表 3 ディスク判別情報」参照。 |
| 59 | FZC Count | ディスク判別 | ディスク判別時の内容。<br>値の内容は「表 3 ディスク判別情報」参照。 |
| 60 | Pi Level | ディスク判別 | ディスク判別時の内容。<br>値の内容は「表 3 ディスク判別情報」参照。 |
| 61 | Disc Type | ディスク種別 | ディスク種別の内容。<br>値の内容は「表 4 ディスク種別情報」参照。 |
| 62 | PO 誤り検出数とアドレス | エラーレート | CD 時は PO 誤り検出数は無効。 |

Table 2: trace mode details

| YY | Contents | Contents supplement |
|---|---|---|
| 71 | A display of PO error detection number of the inner circumference of 1-layer and an address. | It is invalid at the time of CD operation. |
| 72 | A display of PO uncorrectable number of the inner circumference of 1-layer and an address. | It is invalid at the time of CD operation. |
| 73 | A display of PI error detection number of the inner circumference of 1-layer and an address. | CD : C1 error detection number |
| 74 | A display of PI uncorrectable number of the inner circumference of 1-layer and an address. | CD : C2 uncorrectable error number |
| 75 | A display of PO error detection number of the central circumference of 1-layer and an address. | It is invalid at the time of CD operation. |
| 76 | A display of PO uncorrectable number of the central circumference of 1-layer and an address. | It is invalid at the time of CD operation. |
| 77 | A display of PI error detection number of the central circumference of 1-layer and an address. | CD : C1 error detection number |
| 78 | A display of PI uncorrectable number of the central circumference of 1-layer and an address. | CD : C2 uncorrectable error number |
| 79 | A display of PO error detection number of the outer circumference of 1-layer and an address. | It is invalid at the time of CD operation. |
| 80 | A display of PO uncorrectable number of the outer circumference of 1-layer and an address. | It is invalid at the time of CD operation. |
| 81 | A display of PI error detection number of the outer circumference of 1-layer and an address. | CD : C1 error detection number |
| 82 | A display of PI uncorrectable number of the outer circumference of 1-layer and an address. | CD : C2 uncorrectable error number |
| 83 | A display of PO error detection number of the inner circumference of 2-layer and an address. | In the case of 1-layer disc, it is invalid. |
| 84 | A display of PO uncorrectable number of the inner circumference of 2-layer and an address. | In the case of 1-layer disc, it is invalid. |
| 85 | A display of PI error detection number of the inner circumference of 2-layer and an address. | In the case of 1-layer disc, it is invalid. |
| 86 | A display of PI uncorrectable number of the inner circumference of 2-layer and an address. | In the case of 1-layer disc, it is invalid. |
| 87 | A display of PO error detection number of the central circumference of 2-layer and an address. | In the case of 1-layer disc, it is invalid. |
| 88 | A display of PO uncorrectable number of the central circumference of 2-layer and an address. | In the case of 1-layer disc, it is invalid. |
| 89 | A display of PI error detection number of the central circumference of 2-layer and an address. | In the case of 1-layer disc, it is invalid. |
| 90 | A display of PI uncorrectable number of the central circumference of 2-layer and an address. | In the case of 1-layer disc, it is invalid. |
| 91 | A display of PO error detection number of the outer circumference of 2-layer and an address. | In the case of 1-layer disc, it is invalid. |
| 92 | A display of PO uncorrectable number of the outer circumference of 2-layer and an address. | In the case of 1-layer disc, it is invalid. |
| 93 | A display of PI error detection number of the outer circumference of 2-layer and an address. | In the case of 1-layer disc, it is invalid. |
| 94 | A display of PI uncorrectable number of the outer circumference of 2-layer and an address. | In the case of 1-layer disc, it is invalid. |

表 2 トレースモード詳細

| YY | 内容 | 補足説明 |
|---|---|---|
| 71 | 1 層内周の PO 誤り検出数とアドレスの表示 | CD 時は無効。 |
| 72 | 1 層内周の PO 訂正不可数とアドレスの表示 | CD 時は無効。 |
| 73 | 1層内周のPI誤り検出数とアドレスの表示 | CD 時は C1 誤り検出数。 |
| 74 | 1層内周のPI訂正不可数とアドレスの表示 | CD 時は C2 訂正不可数。 |
| 75 | 1 層中周の PO 誤り検出数とアドレスの表示 | CD 時は無効。 |
| 76 | 1 層中周の PO 訂正不可数とアドレスの表示 | CD 時は無効。 |
| 77 | 1層中周のPI誤り検出数とアドレスの表示 | CD 時は C1 誤り検出数。 |
| 78 | 1層中周のPI訂正不可数とアドレスの表示 | CD 時は C2 訂正不可数。 |
| 79 | 1 層外周の PO 誤り検出数とアドレスの表示 | CD 時は無効。 |
| 80 | 1 層外周の PO 訂正不可数とアドレスの表示 | CD 時は無効。 |
| 81 | 1層外周のPI誤り検出数とアドレスの表示 | CD 時は C1 誤り検出数。 |
| 82 | 1層外周のPI訂正不可数とアドレスの表示 | CD 時は C2 訂正不可数。 |
| 83 | 2 層内周の PO 誤り検出数とアドレスの表示 | 1 層ディスクの場合、無効。 |
| 84 | 2 層内周の PO 訂正不可数とアドレスの表示 | 1 層ディスクの場合、無効。 |
| 85 | 2層内周のPI誤り検出数とアドレスの表示 | 1 層ディスクの場合、無効。 |
| 86 | 2層内周のPI訂正不可数とアドレスの表示 | 1 層ディスクの場合、無効。 |
| 87 | 2 層中周の PO 誤り検出数とアドレスの表示 | 1 層ディスクの場合、無効。 |
| 88 | 2 層中周の PO 訂正不可数とアドレスの表示 | 1 層ディスクの場合、無効。 |
| 89 | 2層中周のPI誤り検出数とアドレスの表示 | 1 層ディスクの場合、無効。 |
| 90 | 2層中周のPI訂正不可数とアドレスの表示 | 1 層ディスクの場合、無効。 |
| 91 | 2 層外周の PO 誤り検出数とアドレスの表示 | 1 層ディスクの場合、無効。 |
| 92 | 2 層外周の PO 訂正不可数とアドレスの表示 | 1 層ディスクの場合、無効。 |
| 93 | 2層外周のPI誤り検出数とアドレスの表示 | 1 層ディスクの場合、無効。 |
| 94 | 2層外周のPI訂正不可数とアドレスの表示 | 1 層ディスクの場合、無効。 |

Table 3:Disc distinction information

| | Mirr Count | Mirr Width | FZC Count | PI Level |
|---|---|---|---|---|
| No Disc | Except 2 and 3 | - | - | - |
| CD High reflection | 2 | More than 0x8ED | - | More than 0x99 |
| CD Low reflection | 2 | More than 0x8ED | - | Less than 0x98 |
| DVD High reflection | 2 | Less than 0x8ED | 1 | More than 0x81 |
| DVDLow reflection | 2 | Less than 0x8ED | 1 | Less than 0x80 |
| DVD 2-layer | 2 | Less than 0x8ED | 2 | - |
| SACD Hybrid | 3 | - | - | - |

PI level Formula：PI level (V) = Measured value × 1.6 ÷ 256
"-" : Invalid

表 3 ディスク判別情報

| | Mirr Count | Mirr Width | FZC Count | PI Level |
|---|---|---|---|---|
| No Disc | 2 と 3 以外 | - | - | - |
| CD 高反射 | 2 | 0x8ED 以上 | - | 0x99 以上 |
| CD 低反射 | 2 | 0x8ED 以上 | - | 0x98 以下 |
| DVD 高反射 | 2 | 0x8ED 以下 | 1 | 0x81 以上 |
| DVD 低反射 | 2 | 0x8ED 以下 | 1 | 0x80 以下 |
| DVD 2 層 | 2 | 0x8ED 以下 | 2 | - |
| SACD Hybrid | 3 | - | - | - |

PI level 計算式：PI level (V) = 測定値× 1.6 ÷ 256
"-" は無効

Table 4: Disc classification information

| Disc Type | Media |
|---|---|
| 0x00 | No Disc |
| 0x01 | Unknown Disc |
| 0x04 | DVD Single Low reflection |
| 0x05 | DVD Dual Parallel Low reflection |
| 0x06 | DVD Dual Opposite Low reflection |
| 0x08 | CDDA Low reflection |
| 0x0A | VCD Low reflection |
| 0x44 | DVD Single High reflection |
| 0x48 | CDDA High reflection |
| 0x4A | VCD High reflection |
| 0x8F | SACD Hybrid Disc |

表 4 ディスク種別情報

| Disc Type | Media |
|---|---|
| 0x00 | No Disc |
| 0x01 | Unknown Disc |
| 0x04 | DVD Single 低反射 |
| 0x05 | DVD Dual Parallel 低反射 |
| 0x06 | DVD Dual Opposite 低反射 |
| 0x08 | CDDA 低反射 |
| 0x0A | VCD 低反射 |
| 0x44 | DVD Single 高反射 |
| 0x48 | CDDA 高反射 |
| 0x4A | VCD 高反射 |
| 0x8F | SACD Hybrid Disc |

# TROUBLE SHOOTING

## 1. GU-3494 MAIN PWB

### 1.1. FL TUBE doesn't light

(1) Check the Set-up process of Panel μ-COM

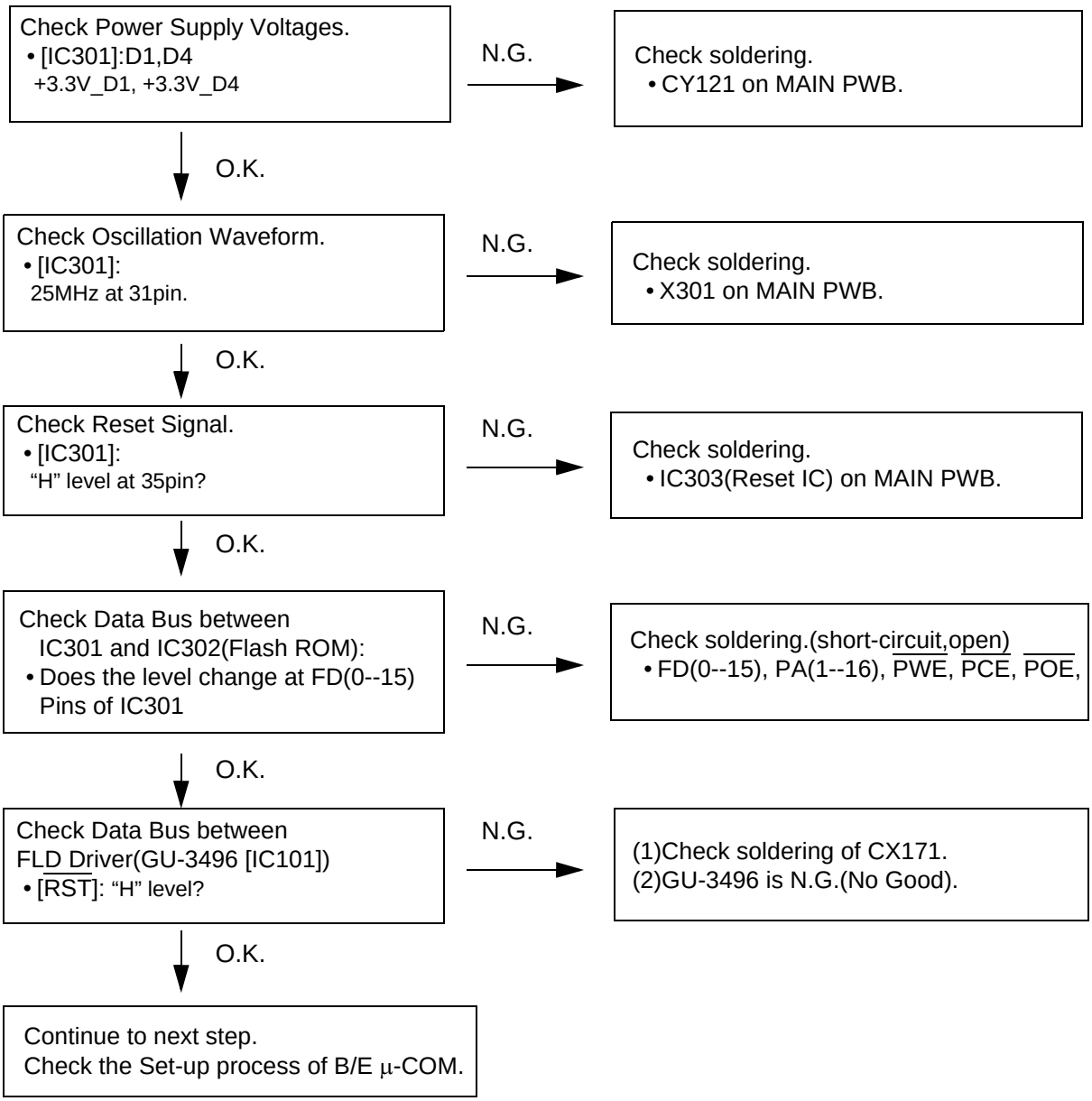

(2) Check the Set-up process of B/E μ-COM.

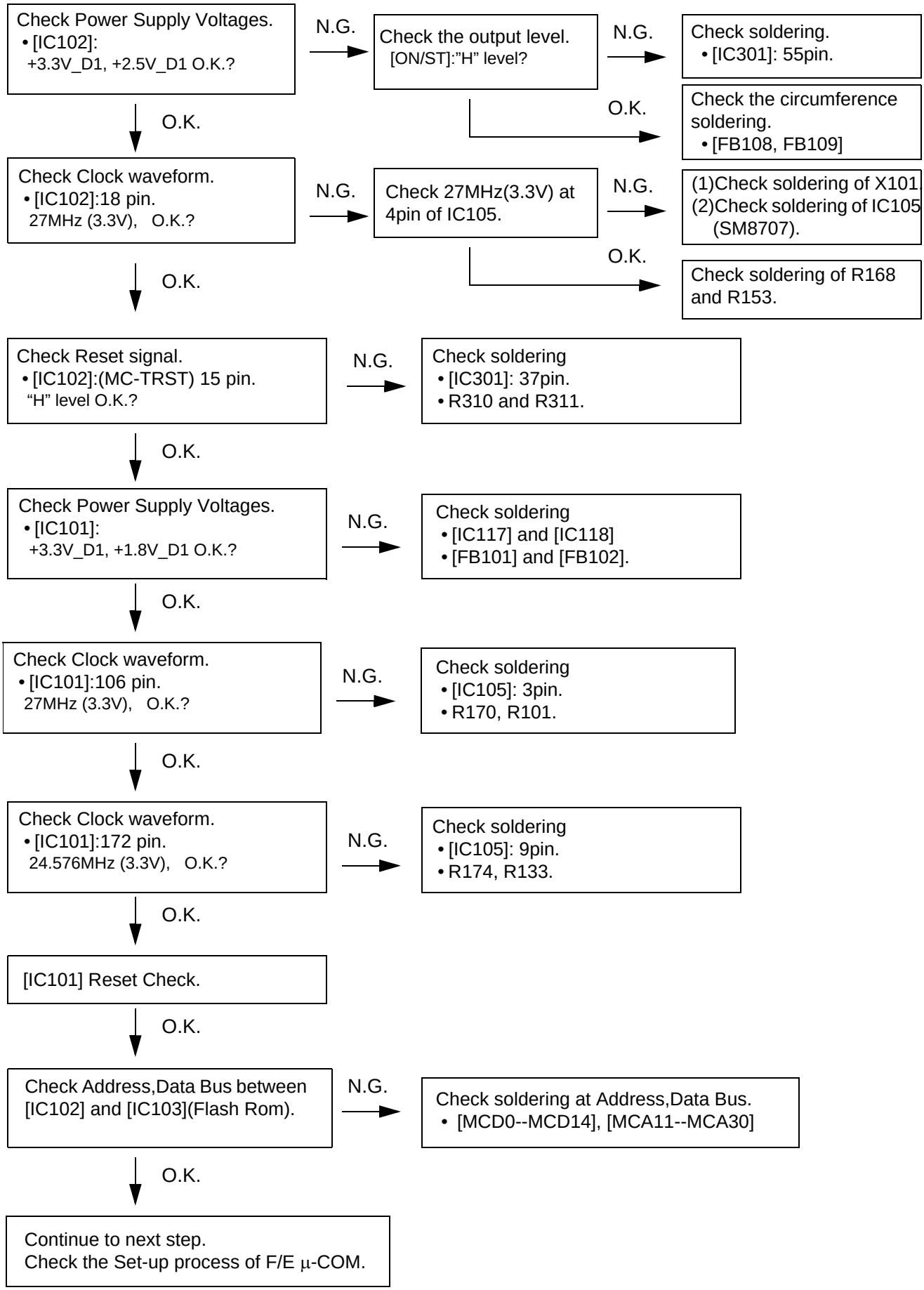

(3) Check the Set-up process of F/E μ-COM.

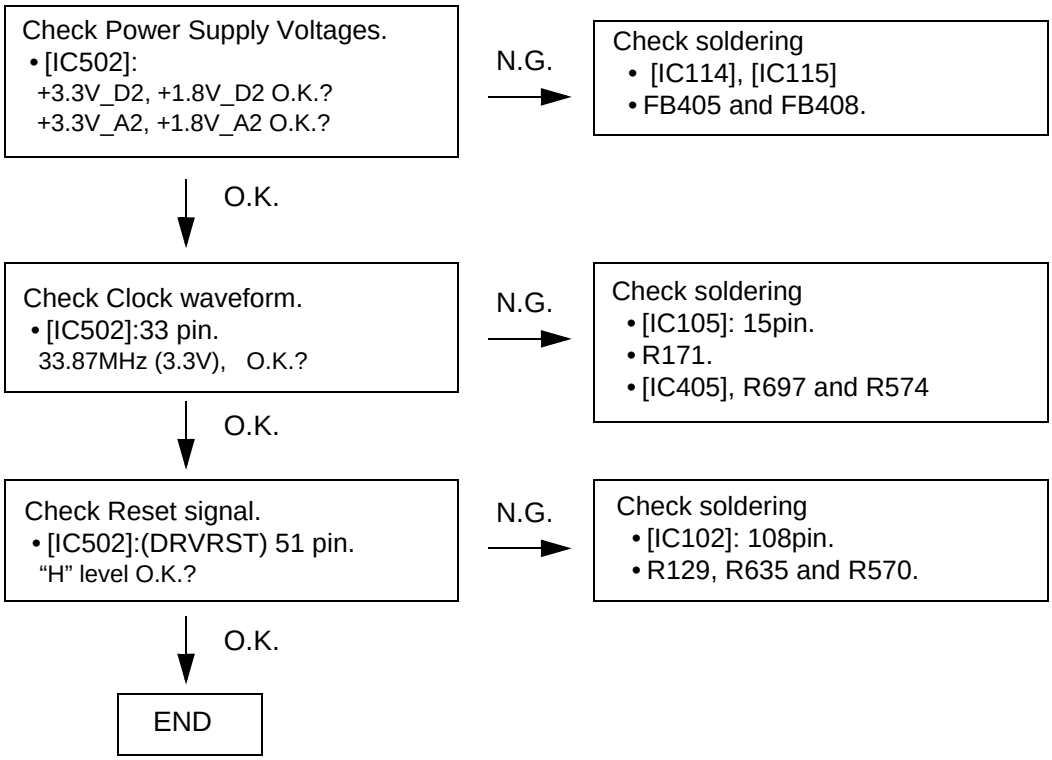


## 1.2. Image is not displayed. (Blue-back, DENON wallpaper)

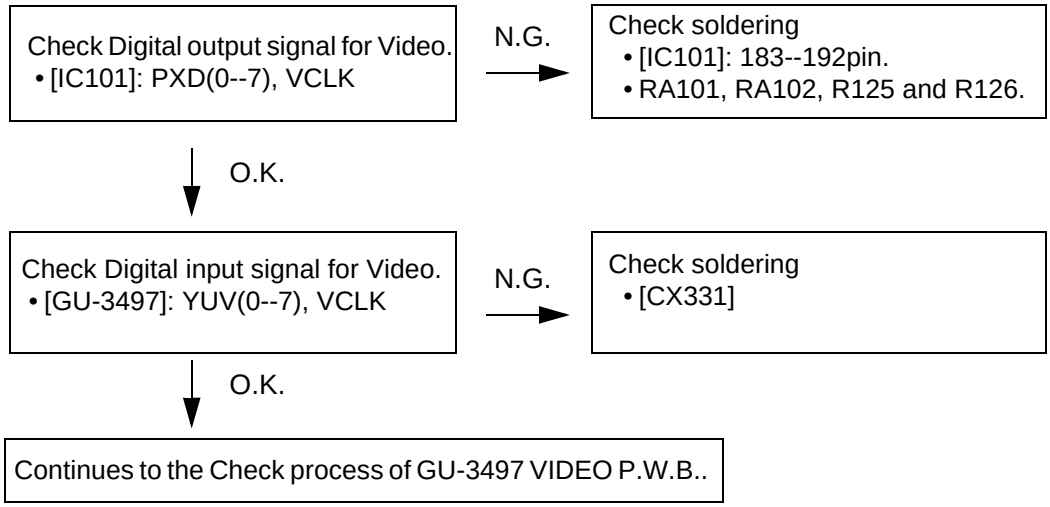

## 1.3. Does not Read Disc

**[No PLAY], [00 00] displayed etc.**

(1) Disc does not Rotate.

Check the Emission of Pick-up.
- Emission of PU laser O.K.?

* See attached sheet laser current check (Page 10,11)

N.G. →
(1)Check soldering of P.U.
- short-circuit?

(2)Check the circumference soldering of TR501 and TR502.

(3)Check connector insertion
- [P.U.] -- [GU3494] FFC(CX241)

(4)Check soldering.
- [IC501], CXD1881AR

(5)Check soldering.
- [IC508]: FAN8042

↓ O.K.

Check Spindle drive signal.
- [DMO]: "H" level?

N.G. →
Check soldering
- [IC502]: 111--113pin check.
- R599, R601, R666--R669
- [IC505]

↓ O.K.

END

(2) CD check process

Check the RF signal.
Check the voltage of Test-Point(TP)
- TP [RFAC]: about $1V_{p-p}$.

N.G. →
Check soldering
- [IC501]: circumference soldering check.
- [IC502]: 65--110pin check.

↓ O.K.

Check Connection.
- [IC502]--[IC503](16MDRAM)
  "L"--"H" alternate?

N.G. →
Check soldering
- [BD(0-15)], [BA(0-9)], [XLCOS], [XUCAS] [XMOE], [XRAS], [XMWR].
- [IC502], [IC503]

↓ O.K.

END

(3) DVD check process

Check VSTEM. (communication)
- VDT(0--7)_COR,
- XHAC_COR, VEFG_COR,
- XSHD_COR, DCK_COR

"L"--"H" alternate?

N.G. →
Check soldering
- [IC502]: 36--49pin
- R621--R633
- R401--411.

↓ O.K.

Check Request Signal
- Request From [B/E] to [F/E] [HDRQ_COR]: "L" level?

N.G. →
Check soldering
- [IC404]

↓ O.K.

END

(4) SACD check process

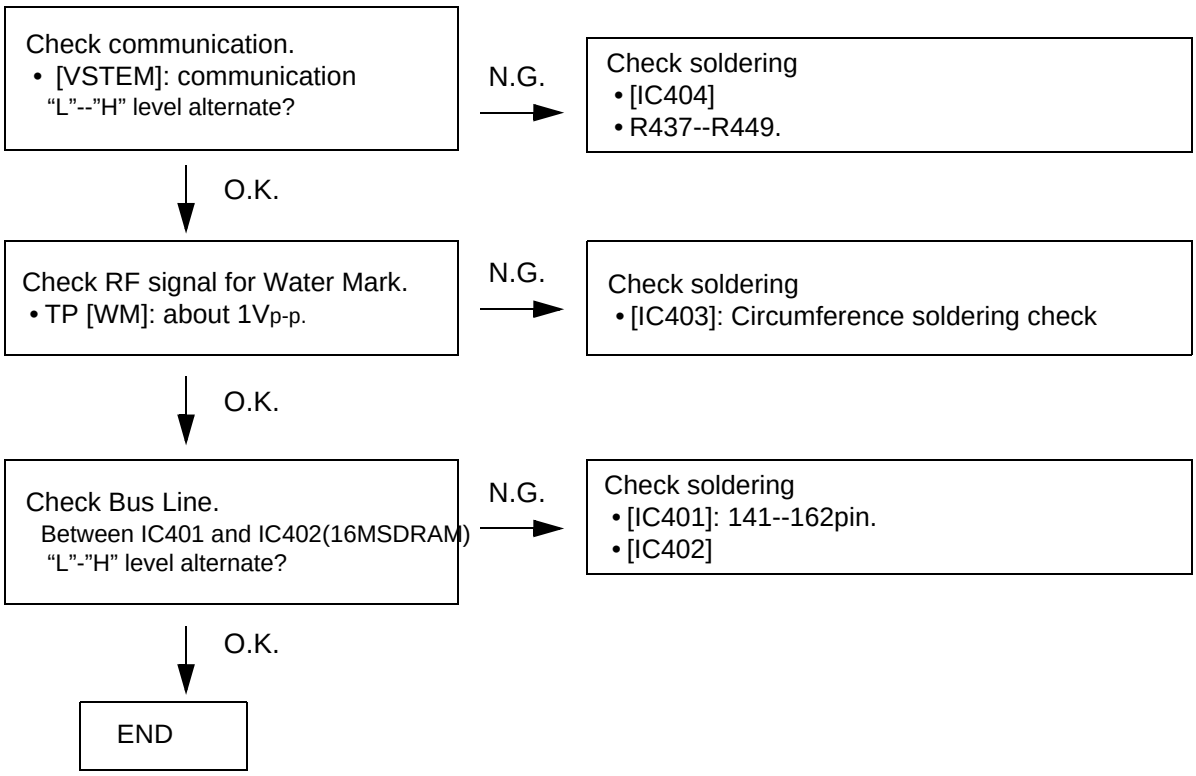

## 1.4. No sound, Noise generated

(1) CD

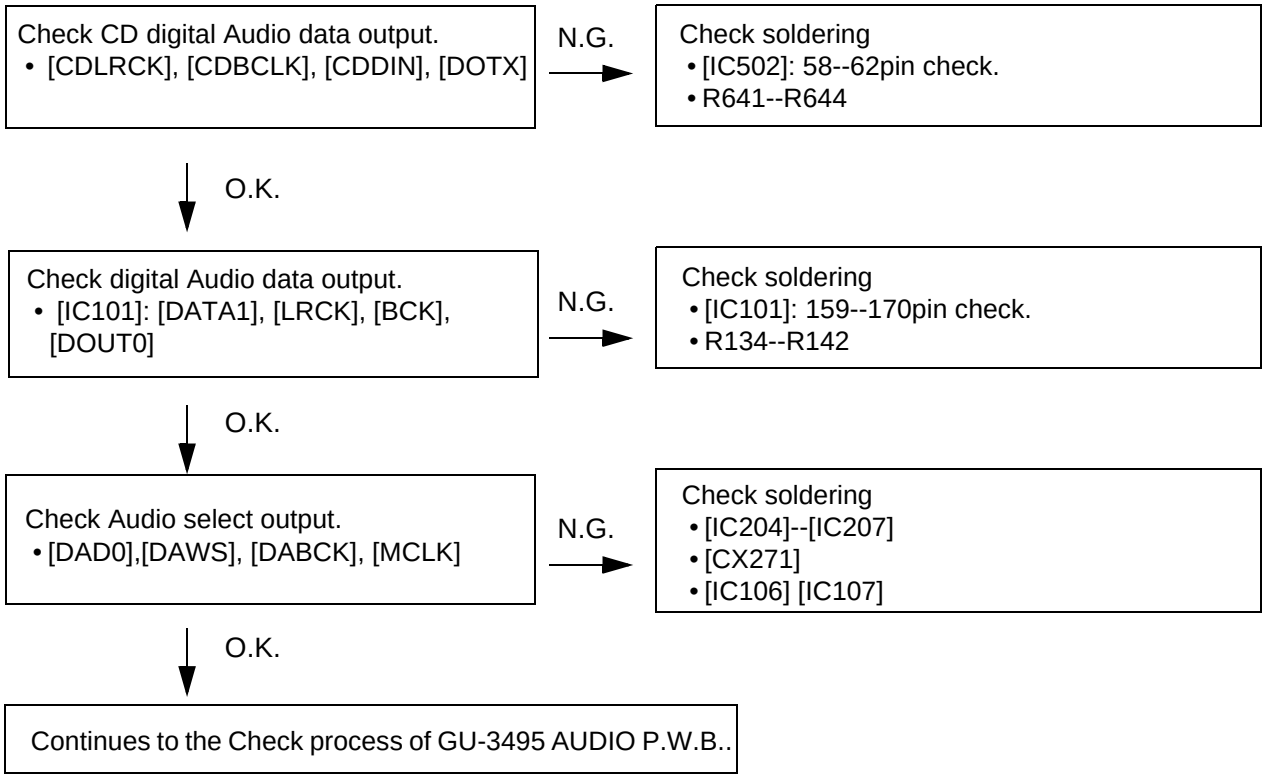


(2) SACD

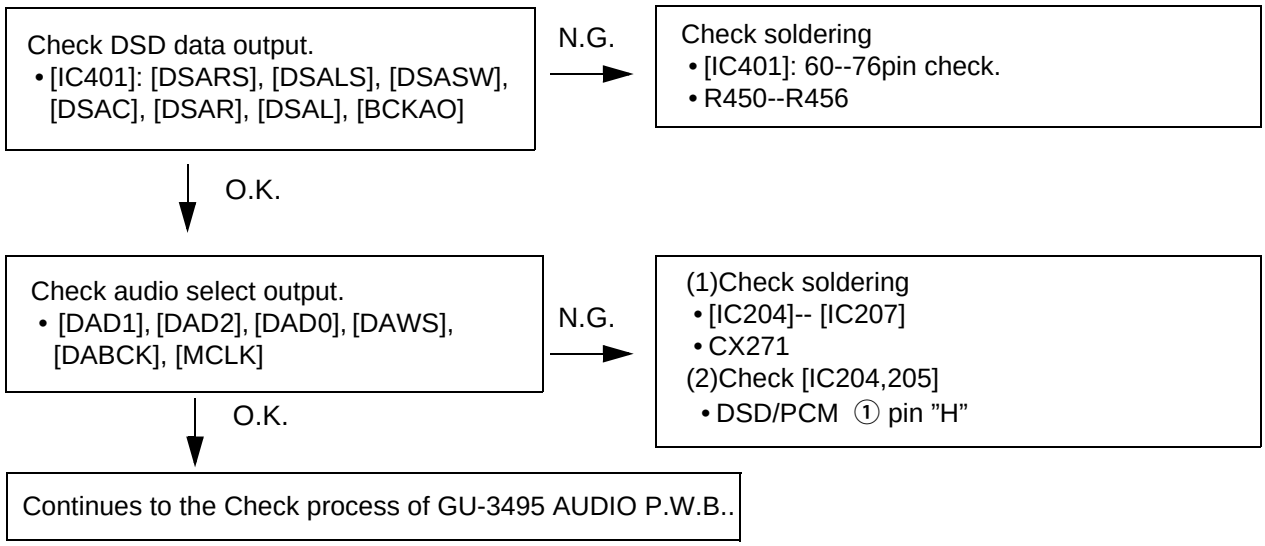

(3) DVD-VIDEO / AUDIO

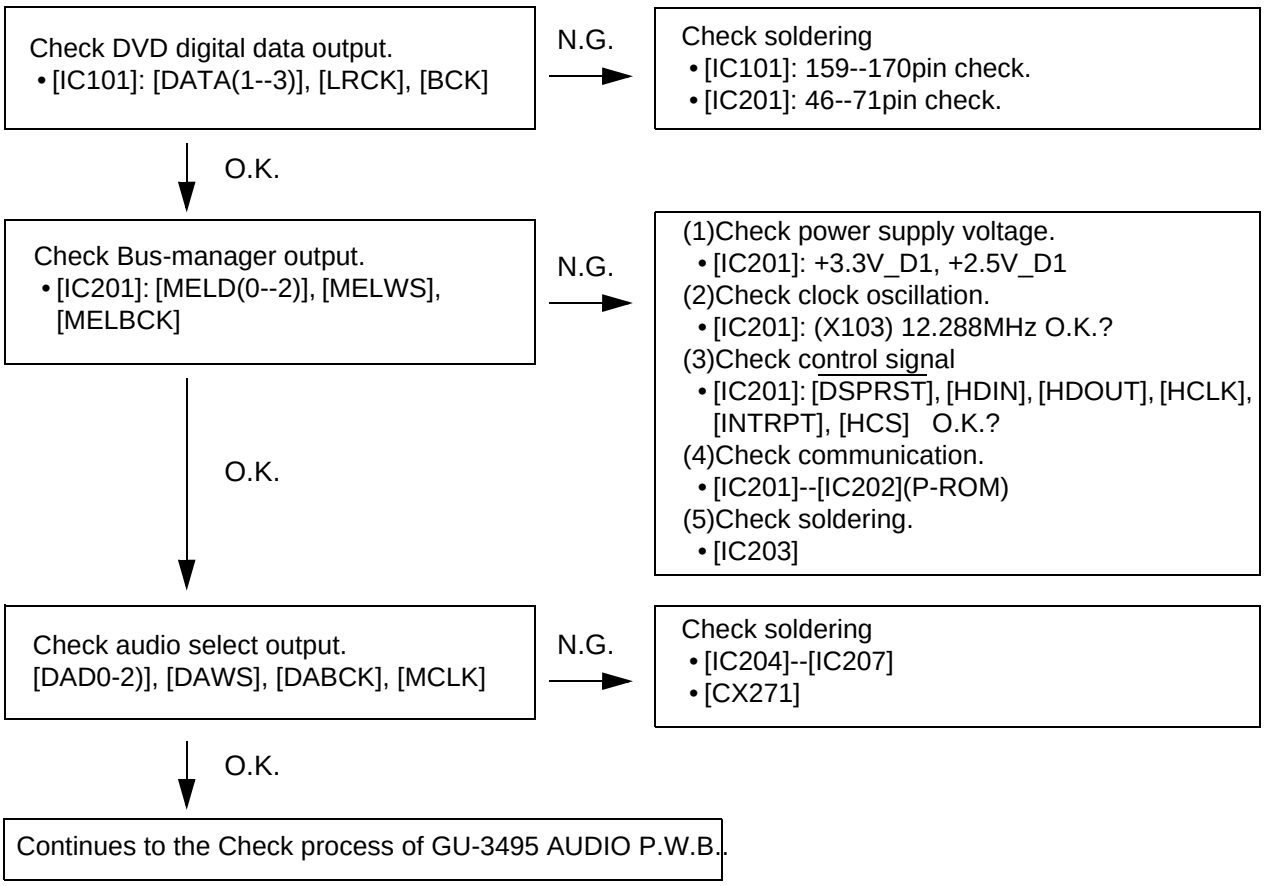


## 2. GU-3495 AUDIO P.W.B.

### 2.1. No sound or Noise generated at audio output terminal.

(1) Check Audio Output terminal, then Input pin of ICs.

- FL, FR → IC206 Audio input check
  CNT,SW → IC209 Audio input check
- SL, SR → IC212 Audio input check

See attached sheet waveform (Page 115 ①～④ )

(2) Check MUTE Circuit and Transistors.

- Check MUTE circuit → Check Transistors
  (TR217--TR220, TR211--TR226)

### 2.2. Does not output Digital output signal(DOUT).

Check belows
[IC201], [IC202]
[T201]

## 3. GU-3497 VIDEO PWB

(1) Progressive output does not outputed.

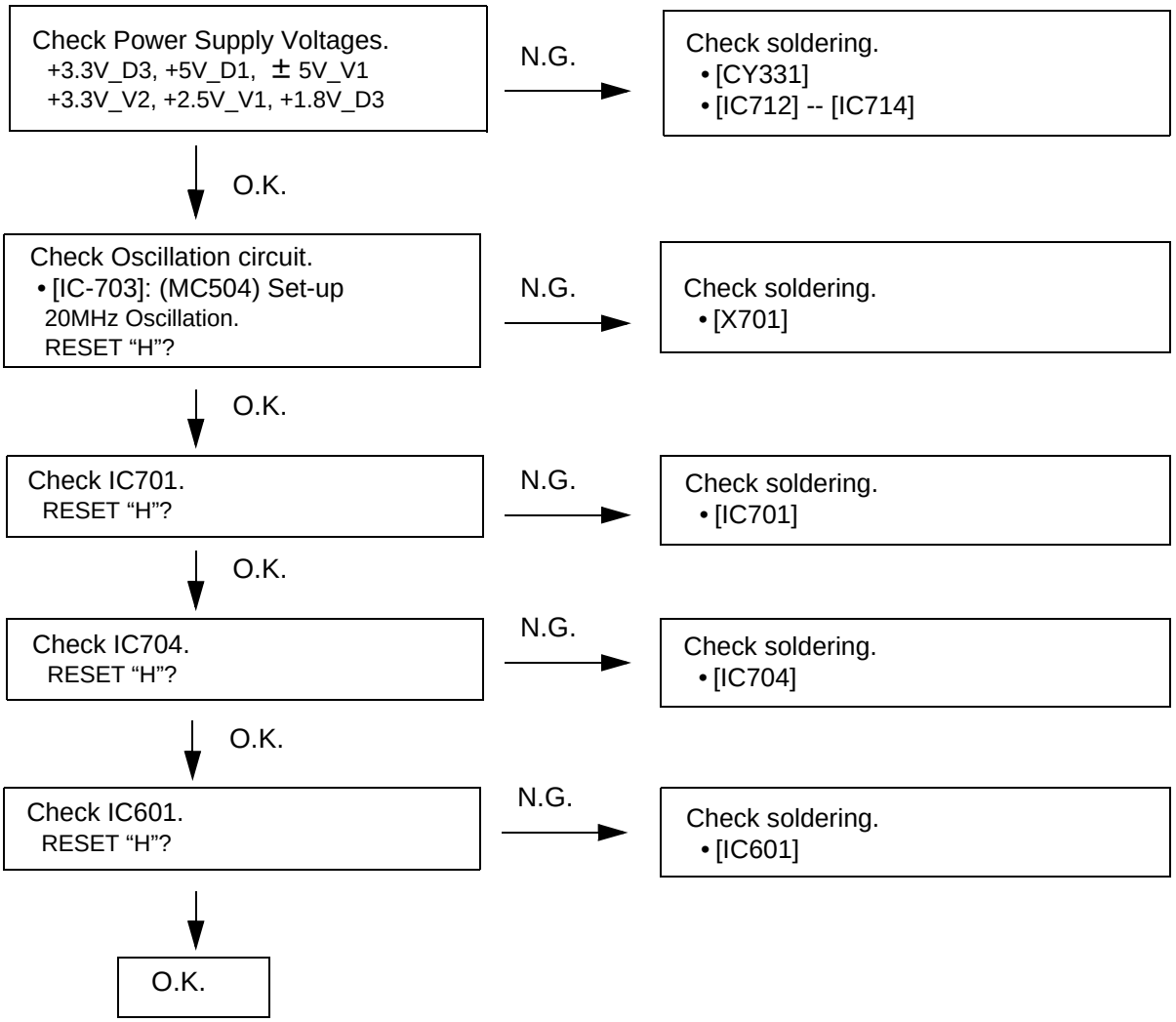


(2) Interlace output does not outputed.

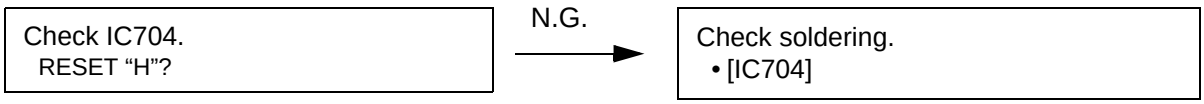

# ELECTRICAL ADJUSTMENT FOR VIDEO　ビデオ回路の調整

## 1. SETTING

(1) Connect the monitor TV to the video output terminal.
(2) Connect the oscilloscope to the Y-signal and C-signal of S-VIDEO output terminal and each terminate at 75 Ohms.
(3) Connect the oscilloscope to the Y-signal, $P_B$-signal and $P_R$-signal of Component video output terminal and each terminate at 75 Ohms.
※ **Use the 75 Ohms resistance must be 1%**
(4) DVD test disc : DVDT-S01

## 2. BEFORE ADJUSTMENT

### 2.1. Setting the Oscilloscope as below.

(1) $P_B/P_R$
(a) TIME/DIV : 2μS
(b) VOLT/DIV : 100mV
**(Use the probe : x10 )**
(2) Y/C
(a) TIME/DIV : 2μS
(b) VOLT/DIV : 50mV
**(Use the probe : x10 )**
Power on. Power Supply

| | | |
|---|---|---|
| USA & Canada | : | 120V |
| Europe | : | 230V |
| Japan | : | 100V |

### 2.2. Preparation

(1) power on.
(2) Set the [SOURCE] selector knob : DVD
(3) Push [OPEN/CLOSE] button, then open the Disc Tray.
(4) Set DVD test disc (DVDT-S01) on the Disc Tray, and then push [CLOSE] button.
(5) FL display appear “STOP”, push [PLAY] button to play-back DVD.
(6) Set the Video output to INTERLACED by remote control unit.
**(Push the [SETUP] button, set to the mode of VIDEO SETUP.)**
(7) Push the [DISPLAY] button of remote control unit and then appear the ON-Screen Display (GUI) on the monitor TV.
(8) Push the [12] button, select title 12 of DVD.
(9) Push the [ENTER] button, playback title 12. (color bar 75%)

## 1. セッティング手順

(1) セットの VIDEO OUT 端子にテレビモニターを接続する。
(2) セットの S2 VIDEO OUT 端子から Y 信号と C 信号をそれぞれオシロスコープ（終端抵抗：75Ω）に接続する。
(3) セットの COMPONENT VIDEO OUT の各端子（Y/$P_B$/$P_R$）をそれぞれオシロスコープ（終端抵抗：75Ω）に接続する。
※ 75Ω 抵抗は 1%品を使用する事。
(4) DVD テストディスク：DVDT-S01 を用意する。

## 2. 調整のまえに

### 2.1. オシロスコープを下記に設定する。

(1) $P_B/P_R$/
(a) TIME/DIV : 2μS
(b) VOLT/DIV : 100mV
（プローブ x10 使用）
(2) Y
(a) TIME/DIV : 2μS
(b) VOLT/DIV : 50mV
（プローブ x10 使用）
電源電圧 ：100V

### 2.2. 準備手順

(1) セットの AC コードをコンセントへ挿入し、セットの電源を ON する。
(2) セットの「OPEN/CLOSE」ボタンを押しトレイを開き、トレイ上に DVD テストディスク（DVDT-S1）をセット後、「CLOSE] ボタンを押す。
(3) セット表示管上に "STOP" が表示されてから、PLAY ボタンを押し、ディスクを再生する。
(4) リモコンで VIDEO 出力をインターレースモードに設定する。
(5) リモコンの DISPLAY ボタンを押しグラフィカル・ユーザー・インターフェイス (GUI) 画面を出す。
(6) 番号ボタンの「12」ボタンを押し、Title 12 を選択する。
(7) 「ENTER」ボタンを押し、Title 12 を再生する（75%カラーバー信号）。

## 2.3. Procedure

(1) Adjust the signal of S-VIDEO out by the wave of oscilloscope.

(a) Target, Y-signal

Point : VR704
Adjustment Value : 1000 ± 20mV
Waveform

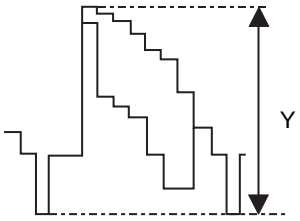


Y-signal of S-VIDEO out

(b) Target, C-signal

Point : VR705
Adjustment Value : 286 ± 5mV
Waveform

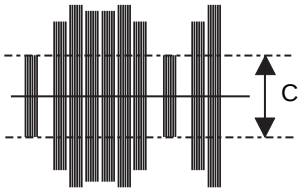


C-signal of S-VIDEO out

(2) Set the Video output to PROGRESSIVE by remote control unit. (Push the [SETUP] button, set to the mode of VIDEO SETUP.)

(a) Target, Y-signal

Point : VR701
Adjustment Value : 1000 ± 20mV
Waveform

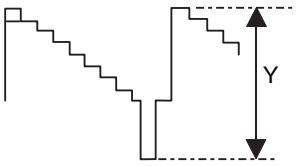


Y-signal

(b) Target, PB-signal

Point : VR702
Adjustment Value : *525 ± 10mV
Waveform

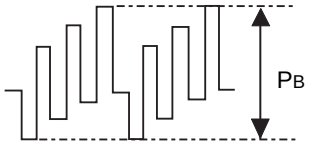


PB-signal

## 2.3. 手順

(1) セットの S2 VIDEO OUT の信号レベルをオシロスコープ上の波高値で調整する。

(a) Y 信号レベル

調整個所 ：VR704
調整値 ：1000 ± 20mV
波形

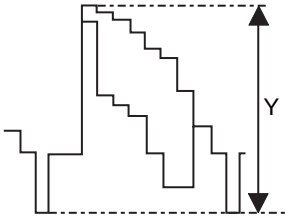


S2 VIDEO OUT の Y 信号レベル

(b) C 信号レベル

調整個所 ：VR705
調整値 ：286 ± 5mV
波形

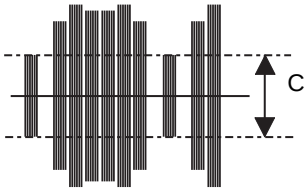


S2 VIDEO OUT の C 信号レベル

(2) リモコンで VIDEO 出力をプログレッシブモードに設定する。

(a) Y 信号レベル

調整個所 ：VR701
調整値 ：1000 ± 20mV
波形

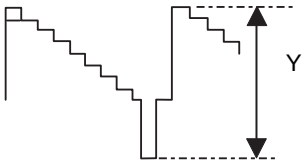


プログレッシブの Y 信号レベル

(b) PB 信号レベル

調整個所 ：VR702
調整値 ：525 ± 10mV
波形

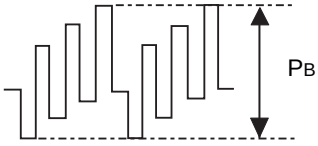


PB 信号レベル

(c) Target, PR-signal

Point : VR703
Adjustment Value : *525 ± 10mV
Waveform

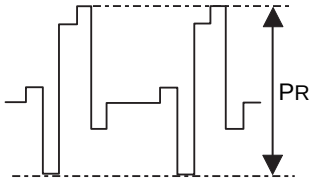


PR-signal

(c) PR 信号レベル

調整個所 ：VR703
調整値 ：525 ± 10mV
波形

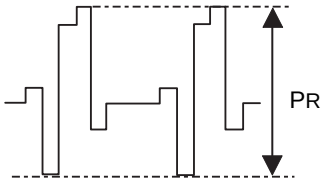


PR- 信号レベル

* : 486 ± 10mV for U.S.A. & Canada model

# BLOCK DIAGRAM

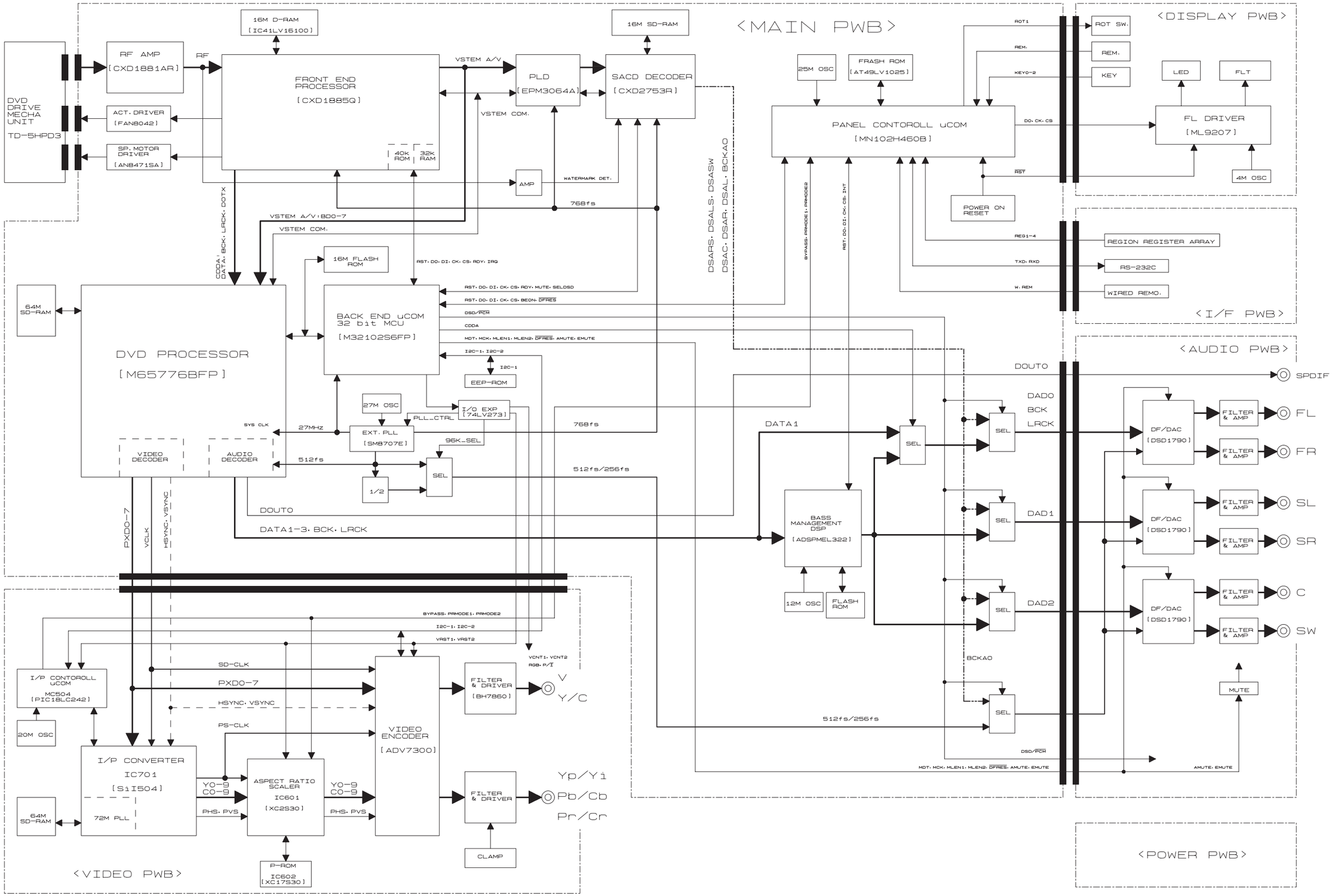

# SEMICONDUCTORS

Only major semiconductors are shown, general semiconductors etc. are omitted to list.
主な半導体を記載しています。汎用の半導体は記載を省略しています。

## 1. IC's

Note: Abbreviation ahead of IC No. indicates the name of P.W.B., etc.
注 ): IC No. の前の記号は、基板の名称を表します。
MA: Main P.W.B. AU: Audio P.W.B.
PD: Power/Display P.W.B. VI: Video P.W.B.
SC: Scart P.W.B. (for Europe model)

### CXD1885Q (MA: IC502)

**Top View**

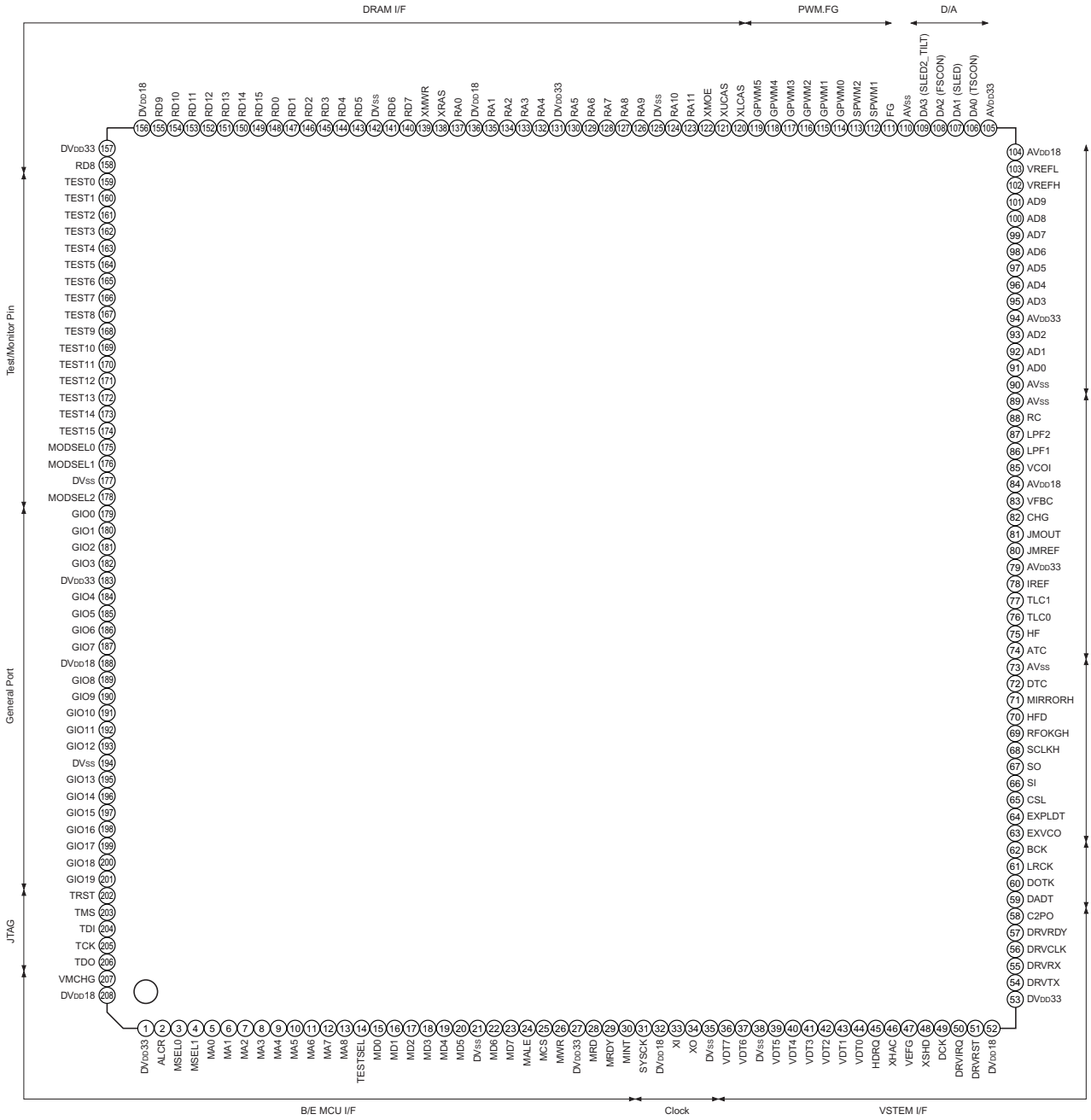

**Block Diagram**

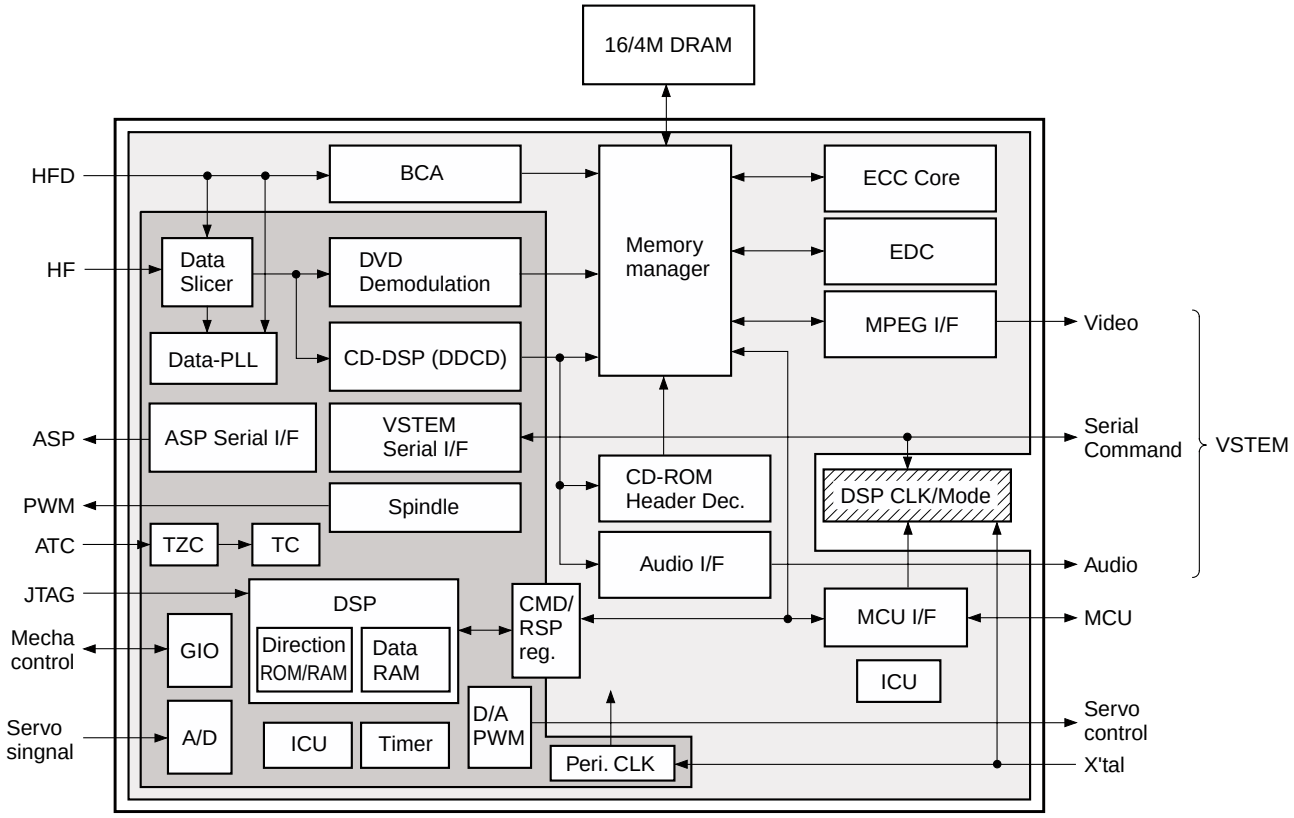


**Functions** **(A/D : Analog/Digital, PU : Pull-up, PD : Pull-down, SMT=Schumitt )**

| No. | Terminal Name | I/O | A/D | Classification | Function | PU | PD | SMT |
|---|---|---|---|---|---|---|---|---|
| 1 | DVDD33 | P | | VDD & GND | Digital 3.3V Power for I/O. | | | |
| 2 | ALCR | I | D | MCU I/F | Chip select input. (L: Reset) | * | | * |
| 3 | MSEL0 | I | D | MCU I/F | MCU I/F mode select 0. | | | * |
| 4 | MSEL1 | I | D | MCU I/F | MCU I/F mode select 1. | | | * |
| 5 | MA0 | I/O | D | MCU I/F | MCU Adress input 0 / data I/O 0 <LSB>. | | | * |
| 6 | MA1 | I/O | D | MCU I/F | MCU Adress input 1 / data I/O 1. | | | * |
| 7 | MA2 | I/O | D | MCU I/F | MCU Adress input 2 / data I/O 2. | | | * |
| 8 | MA3 | I/O | D | MCU I/F | MCU Adress input 3 / data I/O 3. | | | * |
| 9 | MA4 | I/O | D | MCU I/F | MCU Adress input 4 / data I/O 4. | | | * |
| 10 | MA5 | I/O | D | MCU I/F | MCU Adress input 5 / data I/O 5. | | | * |
| 11 | MA6 | I/O | D | MCU I/F | MCU Adress input 6 / data I/O 6. | | | * |
| 12 | MA7 | I/O | D | MCU I/F | MCU Adress input 7 / data I/O 7. | | | * |
| 13 | MA8 | I | D | MCU I/F | MCU Adress input 8 <MSB>. | | | * |
| 14 | TESTSEL | I | D | MCU I/F | TEST Select input. | | | * |
| 15 | MD0 | I/O | D | MCU I/F | MCU data I/O 0 <LSB>. | | | * |
| 16 | MD1 | I/O | D | MCU I/F | MCU data I/O 1. | | | * |
| 17 | MD2 | I/O | D | MCU I/F | MCU data I/O 2. | | | * |
| 18 | MD3 | I/O | D | MCU I/F | MCU data I/O 3. | | | * |
| 19 | MD4 | I/O | D | MCU I/F | MCU data I/O 4. | | | * |
| 20 | MD5 | I/O | D | MCU I/F | MCU data I/O 5. | | | * |
| 21 | DVSS | P | | VDD & GND | Digital Ground. | | | |
| 22 | MD6 | I/O | D | MCU I/F | MCU data I/O 6. | | | * |
| 23 | MD7 | I/O | D | MCU I/F | MCU data I/O 7 <MSB>. | | | * |
| 24 | MALE | I | D | MCU I/F | MCU Adress latch signal input. | | | * |
| 25 | MCS | I | D | MCU I/F | MCU Chip Select signal input. | | | * |
| 26 | MWR | I | D | MCU I/F | MCU Write strobe signal. | | | * |
| 27 | DVDD33 | P | | VDD & GND | digital 3.3V Power. (for I/O ) | | | |
| 28 | MRD | I | D | MCU I/F | MCU Read Strobe signal. | | | * |
| 29 | MRDY | O | D | MCU I/F | MCU Ready signal. (L: Wait) | | | |
| 30 | MINT | O | D | MCU I/F | MCU Interrupt signal. (L: Interrupt request) | | | |

| No. | Terminal Name | I/O | A/D | Classification | Function | PU | PD | SMT |
|---|---|---|---|---|---|---|---|---|
| 31 | SYSCK | O | D | Clock | Clock Monitor output. | | | |
| 32 | DVDD18 | P | | VDD & GND | Digital 1.8V Power. (Internal logic system power) | | | |
| 33 | XI | I | D | Clock | Crystal oscillation input. | | | |
| 34 | XO | O | D | Clock | Crystal oscillation output. | | | |
| 35 | DVSS | P | | VDD & GND | Digital Ground. | | | |
| 36 | VDT7 | O | D | VSTEM A/V | MPEG data output 7. | | | |
| 37 | VTD6 | O | D | VSTEM A/V | MPEG data output 6. | | | |
| 38 | DVSS | P | | VDD & GND | Digital Ground. | | | |
| 39 | VDT5 | O | D | VSTEM A/V | MPEG data output 5. | | | |
| 40 | VDT4 | O | D | VSTEM A/V | MPEG data output 4. | | | |
| 41 | VDT3 | O | D | VSTEM A/V | MPEG data output 3. | | | |
| 42 | VDT2 | O | D | VSTEM A/V | MPEG data output 2. | | | |
| 43 | VDT1 | O | D | VSTEM A/V | MPEG data output 1. | | | |
| 44 | VDT0 | O | D | VSTEM A/V | MPEG data output 0. | | | |
| 45 | HDRQ | I | D | VSTEM A/V | MPEG data Request input. | * | | |
| 46 | XHAC | O | D | VSTEM A/V | Data Valid output. | | | |
| 47 | VEFG | O | D | VSTEM A/V | ECC Error-sector Flag output. (L: error sector) | | | |
| 48 | XSHD | O | D | VSTEM A/V | DVD Sector Head Flag output. | | | |
| 49 | DCK | O | D | VSTEM A/V | Data Strobe output. | | | |
| 50 | DRVIRQ | O | D | VSTEM Command | Interrupt Request output for Host. (L: interruption is demanded) | | | |
| 51 | DRVRST | I | D | VSTEM Command | Drive H/W Reset input. (L: reset) | * | | * |
| 52 | DVDD18 | P | | VDD & GND | Digital 1.8V power for Internal logic system. | | | |
| 53 | DVDD33 | P | | VDD & GND | Digital 3.3V Power for I/O. | | | |
| 54 | DRVTX | O | D | VSTEM Command | Transmitting serial data output to Host. | | | |
| 55 | DRVRX | I | D | VSTEM Command | Reception serial data input from Host. | | | |
| 56 | DRVCLK | I | D | VSTEM Command | Clock input from Host. | | | * |
| 57 | DRVRDY | O | D | VSTEM Command | Drive Ready signal output. (L: ready) | | | |
| 58 | C2PO | O | D | Audio I/F | CD-DSP C2 Pointer output. | | | |
| 59 | DADT | O | D | Audio I/F | Audio serial data output. | | | |
| 60 | DOTX | O | D | Audio I/F | Digital audio output. | | | |
| 61 | LRCK | O | D | Audio I/F | L/R Clock output. | | | |
| 62 | BCK | O | D | Audio I/F | Audio Bit Clock output. | | | |
| 63 | EXVCO | I | D | TEST/Monitor | External Channel clock input. | | | |
| 64 | EXPLDT | I | D | TEST/Monitor | External RF data input. (Logic level) | | | |
| 65 | CSL | O | D | ASP I/F | SIO for RF signal processing LSI control. Latch signal output. | | | |
| 66 | SI | I | D | ASP I/F | SIO for RF signal processing LSI control. Serial data input. | | | |
| 67 | SO | O | D | ASP I/F | SIO for RF signal processing LSI control. Serial data output. | | | |
| 68 | SCLKH | O | D | ASP I/F | SIO for RF signal processing LSI control. Serial clock output. | | | |
| 69 | RFOKGH | I | D | ASP I/F | RF O.K. Signal input. | | | * |
| 70 | HFD | I | D | ASP I/F | RF lack Signal input. | | | * |
| 71 | MIRRORH | I | D | ASP I/F | Mirror detected signal input.(H: Mirror detected) | | | * |
| 72 | DTC | I | D | ASP I/F | Track cross signal input. (Logic level input) | | | * |
| 73 | AVSS | P | | VDD & GND | Analog Ground. | | | |
| 74 | ATC | I | A | Data PLL | Track Cross signal input. (Analog level input) | | | |
| 75 | HF | I | A | Data PLL | RF signal input. | | | |
| 76 | TLC0 | O | A | Data PLL | Asymmetry Charge-pump output 0. | | | |
| 77 | TLC1 | O | A | Data PLL | Asymmetry Charge-pump output 1 | | | |
| 78 | IREF | I | A | Data PLL | Reference current setting terminal for Asymmetry Circuit. | | | |
| 79 | AVDD33 | P | | VDD & GND | Analog 3.3V Power. | | | |
| 80 | JMREF | I | A | Data PLL | Reference current setting terminal for Jitter Monitor | | | |
| 81 | JMOUT | O | A | Data PLL | Jitter Monitor output. | | | |
| 82 | CHG | I | A | Data PLL | Reference current setting terminal for data PLL. | | | |
| 83 | VFBC | I | A | Data PLL | VCO offset frequency setting terminal for data PLL. | | | |
| 84 | AVDD18 | P | | VDD & GND | Analog 1.8V Power. | | | |
| 85 | VCOI | I | A | Data PLL | VCO Control voltage input terminal for data PLL. | | | |
| 86 | LPF1 | O | A | Data PLL | VCO Loop-filter connection terminal 1 for data PLL. | | | |
| 87 | LPF2 | O | A | Data PLL | VCO Loop-filter connection terminal 2 for data PLL | | | |
| 88 | RC | I | A | Data PLL | VCO gain setting terminal for data PLL. | | | |
| 89 | AVSS | P | | VDD & GND | Analog Ground. | | | |
| 90 | AVSS | P | | VDD & GND | Analog Ground. | | | |
| 91 | AD0 | I | A | ADC | AD0 Input. | | | |

| No. | Terminal Name | I/O | A/D | Classification | Function | PU | PD | SMT |
|---|---|---|---|---|---|---|---|---|
| 92 | AD1 | I | A | ADC | AD1 Input. | | | |
| 93 | AD2 | I | A | ADC | AD2 Input. | | | |
| 94 | AVDD33 | P | | VDD & GND | Analog 3.3V Power. | | | |
| 95 | AD3 | I | A | ADC | AD3 Input. | | | |
| 96 | AD4 | I | A | ADC | AD4 Input. | | | |
| 97 | AD5 | I | A | ADC | AD5 Input. | | | |
| 98 | AD6 | I | A | ADC | AD6 Input. | | | |
| 99 | AD7 | I | A | ADC | AD7 Input. | | | |
| 100 | AD8 | I | A | ADC | AD8 Input. | | | |
| 101 | AD9 | I | A | ADC | AD9 Input. | | | |
| 102 | VREFH | I/O | A | ADC | Max Reference Voltage input for ADC.<br>(Internal Reference Voltage mode, it will be an output state) | | | |
| 103 | VREFL | I/O | A | ADC | Min Reference Voltage input for ADC.<br>(Internal Reference Voltage mode, it will be an output state) | | | |
| 104 | AVDD18 | P | | VDD & GND | Analog 1.8V Power. | | | |
| 105 | AVDD33 | P | | VDD & GND | Analog 3.3V Power. | | | |
| 106 | DA0 (TSCON) | O | A | DAC | DA0 output. (Track Servo output) | | | |
| 107 | DA1 (SLED) | O | A | DAC | DA1 output. (Sled Servo output) | | | |
| 108 | DA2 (FSCON) | O | A | DAC | DA2 output. (Forcus Servo output) | | | |
| 109 | DA3 (SLED2_ TILT) | O | A | DAC | DA3 output. (Sled Servo / Tilt Servo output) | | | |
| 110 | AVSS | P | | VDD & GND | Analog Ground | | | |
| 111 | FG | I | D | SPM | FG signal input. | | | * |
| 112 | SPWM1 | O | D | SPM | Spindle motor PWM output 1. | | | |
| 113 | SPWM2 | O | D | SPM | Spindle motor PWM output 2. | | | |
| 114 | GPWM0 | O | D | General PWM | Multi-purpose PWM output 0. | | | |
| 115 | GPWM1 | O | D | General PWM | Multi-purpose PWM output 1. | | | |
| 116 | GPWM2 | O | D | General PWM | Multi-purpose PWM output 2. | | | |
| 117 | GPWM3 | O | D | General PWM | Multi-purpose PWM output 3. | | | |
| 118 | GPWM4 | O | D | General PWM | Multi-purpose PWM output 4. | | | |
| 119 | GPWM5 | O | D | General PWM | Multi-purpose PWM output 5. | | | |
| 120 | XLCAS | O | D | DRAM I/F | DRAM LCAS output. (Low-Byte row address strobe output) | | | |
| 121 | XUCAS | O | D | DRAM I/F | DRAM UCAS output. (Upper-Byte row address strobe output) | | | |
| 122 | XMOE | O | D | DRAM I/F | DRAM output enable. | | | |
| 123 | RA11 | O | D | DRAM I/F | DRAM address output terminal 11. | | | |
| 124 | RA10 | O | D | DRAM I/F | DRAM address output terminal 10. | | | |
| 125 | DVSS | P | | VDD & GND | Digital Ground. | | | |
| 126 | RA9 | O | D | DRAM I/F | DRAM address output terminal 9. | | | |
| 127 | RA8 | O | D | DRAM I/F | DRAM address output terminal 8. | | | |
| 128 | RA7 | O | D | DRAM I/F | DRAM address output terminal 7. | | | |
| 129 | RA6 | O | D | DRAM I/F | DRAM address output terminal 6. | | | |
| 130 | RA5 | O | D | DRAM I/F | DRAM address output terminal 5. | | | |
| 131 | DVDD33 | P | | VDD & GND | Digital 3.3V Power. (for I/O) | | | |
| 132 | RA4 | O | D | DRAM I/F | DRAM address output terminal 4. | | | |
| 133 | RA3 | O | D | DRAM I/F | DRAM address output terminal 3. | | | |
| 134 | RA2 | O | D | DRAM I/F | DRAM address output terminal 2. | | | |
| 135 | RA1 | O | D | DRAM I/F | DRAM address output terminal 1. | | | |
| 136 | DVDD18 | P | | VDD & GND | Digital 1.8V Power. (for Internal Logic power) | | | |
| 137 | RA0 | O | D | DRAM I/F | DRAM address output terminal 0. | | | |
| 138 | XRAS | O | D | DRAM I/F | DRAM RAS output. (Column address strobe output) | | | |
| 139 | XMWR | O | D | DRAM I/F | DRAM Write enable. | | | |
| 140 | RD7 | I/O | D | DRAM I/F | DRAM data input/output terminal 7. | * | | |
| 141 | RD6 | I/O | D | DRAM I/F | DRAM data input/output terminal 6. | * | | |
| 142 | DVSS | P | | VDD & GND | Digital Ground. | | | |
| 143 | RD5 | I/O | D | DRAM I/F | DRAM data input/output terminal 5. | * | | |
| 144 | RD4 | I/O | D | DRAM I/F | DRAM data input/output terminal 4. | * | | |
| 145 | RD3 | I/O | D | DRAM I/F | DRAM data input/output terminal 3. | * | | |
| 146 | RD2 | I/O | D | DRAM I/F | DRAM data input/output terminal 2. | * | | |
| 147 | RD1 | I/O | D | DRAM I/F | DRAM data input/output terminal 1. | * | | |
| 148 | RD0 | I/O | D | DRAM I/F | DRAM data input/output terminal 0. | * | | |
| 149 | RD15 | I/O | D | DRAM I/F | DRAM data input/output terminal 15. | * | | |

| No. | Terminal Name | I/O | A/D | Classification | Function | PU | PD | SMT |
|---|---|---|---|---|---|---|---|---|
| 150 | RD14 | I/O | D | DRAM I/F | DRAM data input/output terminal 14. | * | | |
| 151 | RD13 | I/O | D | DRAM I/F | DRAM data input/output terminal 13. | * | | |
| 152 | RD12 | I/O | D | DRAM I/F | DRAM data input/output terminal 12. | * | | |
| 153 | RD11 | I/O | D | DRAM I/F | DRAM data input/output terminal 11. | * | | |
| 154 | RD10 | I/O | D | DRAM I/F | DRAM data input/output terminal 10. | * | | |
| 155 | RD9 | I/O | D | DRAM I/F | DRAM data input/output terminal 9. | * | | |
| 156 | DVDD18 | P | | VDD & GND | Digital 1.8V Power. (for internal Logic system) | | | |
| 157 | DVDD33 | P | | VDD & GND | Digital 3.3V power for I/O. | | | |
| 158 | RD8 | I/O | D | DRAM I/F | DRAM data input/output terminal 8. | * | | |
| 159 | TEST0 | O | D | TEST/Monitor | TEST I/O 0. | | | |
| 160 | TEST1 | O | D | TEST/Monitor | TEST I/O 1. | | | |
| 161 | TEST2 | O | D | TEST/Monitor | TEST I/O 2. | | | |
| 162 | TEST3 | O | D | TEST/Monitor | TEST I/O 3. | | | |
| 163 | TEST4 | O | D | TEST/Monitor | TEST I/O 4. | | | |
| 164 | TEST5 | O | D | TEST/Monitor | TEST I/O 5. | | | |
| 165 | TEST6 | O | D | TEST/Monitor | TEST I/O 6. | | | |
| 166 | TEST7 | O | D | TEST/Monitor | TEST I/O 7. | | | |
| 167 | TEST8 | O | D | TEST/Monitor | TEST I/O 8. | | | |
| 168 | TEST9 | O | D | TEST/Monitor | TEST I/O 9. | | | |
| 169 | TEST10 | O | D | TEST/Monitor | TEST I/O 10. | | | |
| 170 | TEST11 | O | D | TEST/Monitor | TEST I/O 11. | | | |
| 171 | TEST12 | O | D | TEST/Monitor | TEST I/O 12. | | | |
| 172 | TEST13 | O | D | TEST/Monitor | TEST I/O 13. | | | |
| 173 | TEST14 | O | D | TEST/Monitor | TEST I/O 14. | | | |
| 174 | TEST15 | O | D | TEST/Monitor | TEST I/O 15. | | | |
| 175 | MODSEL0 | I | D | TEST/Monitor | TEST mode select 0. (GND, under normal conditions) | | | |
| 176 | MODSEL1 | I | D | TEST/Monitor | TEST mode select 1. (GND, under normal conditions) | | | |
| 177 | DVSS | P | | VDD & GND | Digital Ground. | | | |
| 178 | MODSEL2 | I | D | TEST/Monitor | TEST mode select 2. (GND, under normal conditions) | | | |
| 179 | GIO0 | I/O | D | Multi-purpose | Multi-purpose port 0. | | * | * |
| 180 | GIO1 | I/O | D | Multi-purpose | Multi-purpose port 1. | | * | * |
| 181 | GIO2 | I/O | D | Multi-purpose | Multi-purpose port 2. | | * | * |
| 182 | GIO3 | I/O | D | Multi-purpose | Multi-purpose port 3. | | * | * |
| 183 | DVDD33 | P | | VDD & GND | Digital 3.3V Power for I/O. | | | |
| 184 | GIO4 | I/O | D | General Port | Multi-purpose port 4. | | * | * |
| 185 | GIO5 | I/O | D | General Port | Multi-purpose port 5. | | * | * |
| 186 | GIO6 | I/O | D | General Port | Multi-purpose port 6. | | * | * |
| 187 | GIO7 | I/O | D | General Port | Multi-purpose port 7. | | * | * |
| 188 | DVDD18 | P | | VDD & GND | Digital 1.8V Power for I/O. (for internal Logic system) | | | |
| 189 | GIO8 | I/O | D | General Port | Multi-purpose port 8. | | * | * |
| 190 | GIO9 | I/O | D | General Port | Multi-purpose port 9. | * | * | * |
| 191 | GIO10 | I/O | D | General Port | Multi-purpose port 10. | | * | * |
| 192 | GIO11 | I/O | D | General Port | Multi-purpose port 11. | | * | * |
| 193 | GIO12 | I/O | D | General Port | Multi-purpose port 12. | * | * | * |
| 194 | DVSS | P | | VDD & GND | Digital Ground. | | | |
| 195 | GIO13 | I/O | D | Multi-purpose | Multi-purpose port 13. | * | * | * |
| 196 | GIO14 | I/O | D | General Port | Multi-purpose port 14. | * | * | * |
| 197 | GIO15 | I/O | D | General Port | Multi-purpose port 15. | * | * | * |
| 198 | GIO16 | I/O | D | General Port | Multi-purpose port 16. | | * | * |
| 199 | GIO17 | I/O | D | General Port | Multi-purpose port 17. | | * | * |
| 200 | GIO18 | I/O | D | General Port | Multi-purpose port 18. | | * | * |
| 201 | GIO19 | I/O | D | General Port | Multi-purpose port 19. | | * | * |
| 202 | TRST | I | D | JTAG I/F | JTAG Reset input. | | * | * |
| 203 | TMS | I | D | JTAG I/F | JTAG Mode Select input. | * | | * |
| 204 | TDI | I | D | JTAG I/F | JTAG Data Input. | * | | * |
| 205 | TCK | I | D | JTAG I/F | JTAG Clock input. | * | | |
| 206 | TDO | O | D | JTAG I/F | JTAG Data output. | | | |
| 207 | VMCHG | I | D | MCU I/F | VSTEM / external MCU access selection terminal of system setting register for DSP. (L: VSTEM, H: external MCU) | | | |
| 208 | DVDD18 | P | | VDD & GND | Digital 1.8V power for internal Logic system. | | | |

**M65776BFP (MA:IC101)**

**Top View**

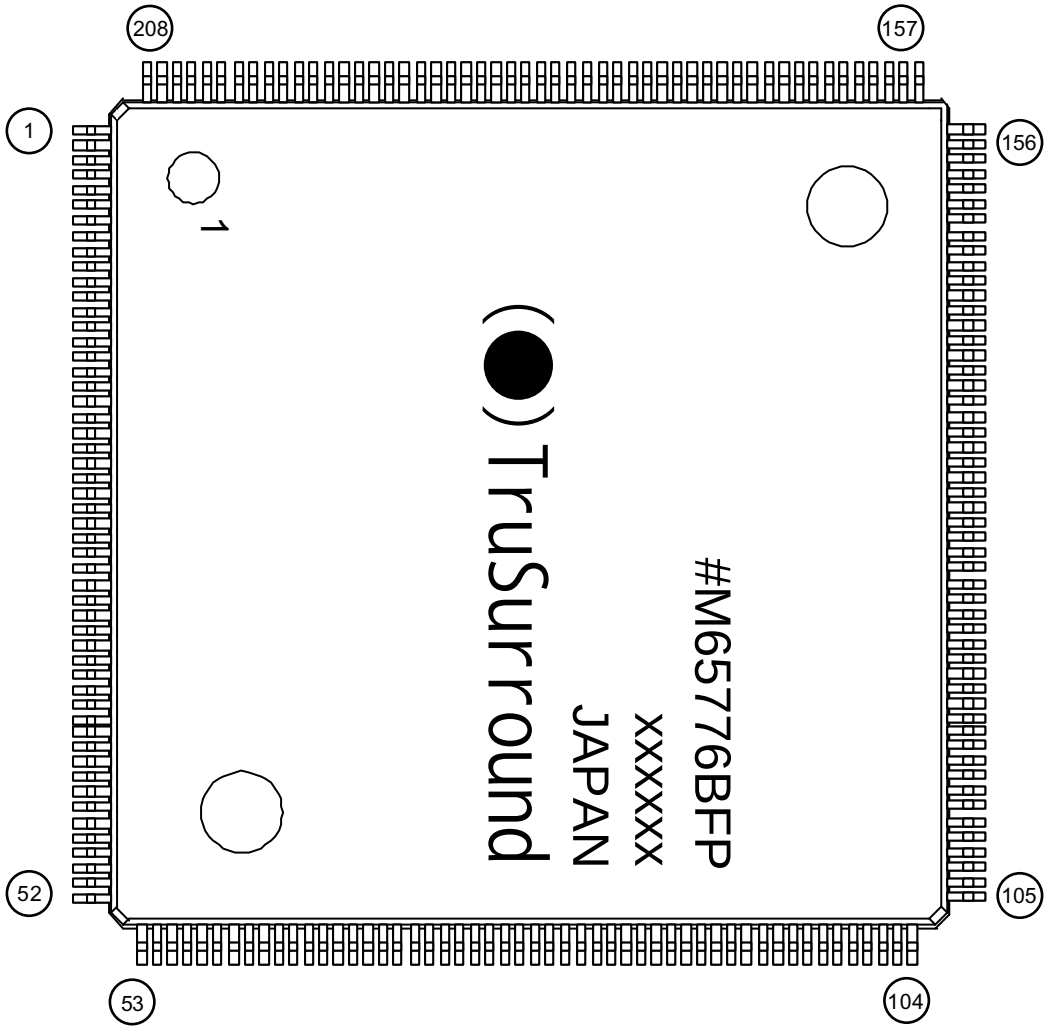

**Pin Assignment**

| No | Name | I/O | No | Name | I/O | No | Name | I/O | No | Name | I/O |
|---|---|---|---|---|---|---|---|---|---|---|---|
| 1 | GND | - | 53 | MA[3] | O | 105 | CLKO | O | 157 | PDR[8] | O |
| 2 | BCLK | I | 54 | MA[4] | O | 106 | CLKIN | I | 158 | PDR[9] | O |
| 3 | BDEN | I | 55 | MA[2] | O | 107 | AVDD18 | - | 159 | LRCLK | O |
| 4 | BDREQ | O | 56 | VDD18 | - | 108 | AGND18 | - | 160 | CDLRCK | I |
| 5 | BSECH | I | 57 | VDD33 | - | 109 | NCO | NC | 161 | CDBCK | I |
| 6 | HD[0] | I/O | 58 | MA[5] | O | 110 | NCO | NC | 162 | CDDATA | I |
| 7 | HD[1] | I/O | 59 | MA[1] | O | 111 | NCO | NC | 163 | CDDIN | I |
| 8 | HD[2] | I/O | 60 | MA[6] | O | 112 | GND | - | 164 | AO0 | O |
| 9 | HD[3] | I/O | 61 | MA[0] | O | 113 | AVDD33 | - | 165 | GND | - |
| 10 | HD[4] | I/O | 62 | MA[7] | O | 114 | DAOUTB | AO | 166 | AO1 | O |
| 11 | HD[5] | I/O | 63 | MA[10] | O | 115 | AVRI | AI | 167 | AO2 | O |
| 12 | VDD18 | - | 64 | GND | - | 116 | PAB | AO | 168 | AOD | O |
| 13 | VDD33 | - | 65 | MA[8] | O | 117 | IREF | AI | 169 | AAD | O |
| 14 | HD[6] | I/O | 66 | MBA[1] | O | 118 | BIAS2 | AI | 170 | DOUT0 | O |
| 15 | HD[7] | I/O | 67 | MA[9] | O | 119 | PAY | AO | 171 | DOUT1 | O |
| 16 | HD[8] | I/O | 68 | MBA[0] | O | 120 | BIAS1 | AI | 172 | ACLKI | I |
| 17 | HD[9] | I/O | 69 | MA[11] | O | 121 | AVDD33 | - | 173 | DACCLK | O |
| 18 | HD[10] | I/O | 70 | DCS | O | 122 | PAR | AO | 174 | VDD18 | - |
| 19 | HD[11] | I/O | 71 | VDD18 | - | 123 | AVDD33 | - | 175 | VDD33 | - |
| 20 | GND | - | 72 | VDD33 | - | 124 | AGND33 | - | 176 | DOCLK | O |
| 21 | HD[12] | I/O | 73 | DCS2 | O | 125 | GND | - | 177 | PWD | TO |
| 22 | HD[13] | I/O | 74 | DCS3 | O | 126 | NC0 | NC | 178 | CSYNC | I |
| 23 | HD[14] | I/O | 75 | DCS4 | O | 127 | NCO | NC | 179 | OSDKEY | O |
| 24 | HD[15] | I/O | 76 | DCS5 | O | 128 | NCO | NC | 180 | VSYNC | O |
| 25 | HA[0] | I | 77 | RAS | O | 129 | NCO | NC | 181 | HSYNC | O |
| 26 | HA[1] | I | 78 | CAS | O | 130 | NCO | NC | 182 | PXCLKP | O |
| 27 | VDD18 | - | 79 | MCLK | O | 131 | NCO | NC | 183 | PXCLK | O |
| 28 | VDD33 | - | 80 | DWE | O | 132 | NCO | NC | 184 | PD[0] | O |
| 29 | HA[2] | I | 81 | GND | - | 133 | NCO | NC | 185 | PD[1] | O |
| 30 | HA[3] | I | 82 | DQMU | O | 134 | VDD18 | - | 186 | PD[2] | O |
| 31 | HA[4] | I | 83 | DQML | O | 135 | VDD33 | - | 187 | GND | - |
| 32 | HA[5] | I | 84 | MD[7] | I/O | 136 | NCO | NC | 188 | PD[3] | O |
| 33 | HA[6] | I | 85 | MD[8] | I/O | 137 | NCO | NC | 189 | PD[4] | O |
| 34 | HA[7] | I | 86 | MD[6] | I/O | 138 | NCO | NC | 190 | PD[5] | O |
| 35 | GND | - | 87 | MD[9] | I/O | 139 | NCO | NC | 191 | PD[6] | O |
| 36 | HA[8] | I | 88 | VDD18 | - | 140 | NCO | NC | 192 | PD[7] | O |
| 37 | HA[9] | I | 89 | VDD33 | - | 141 | NCO | NC | 193 | RESET | I |
| 38 | HA[10] | I | 90 | MD[5] | I/O | 142 | NCO | NC | 194 | HMODE[0] | I |
| 39 | HA[11] | I | 91 | MD[10] | I/O | 143 | NCO | NC | 195 | HMODE[1] | I |
| 40 | CS | I | 92 | MD[4] | I/O | 144 | NCO | NC | 196 | TEST[0] | I |
| 41 | RE | I | 93 | MD[11] | I/O | 145 | GND | - | 197 | TEST[1] | I |
| 42 | VDD18 | - | 94 | MD[3] | I/O | 146 | NCO | NC | 198 | VDD18 | - |
| 43 | VDD33 | - | 95 | MD[12] | I/O | 147 | NCO | NC | 199 | VDD33 | - |
| 44 | WE | I | 96 | GND | - | 148 | NCO | NC | 200 | TEST[2] | I |
| 45 | BHE | I | 97 | MD[2] | I/O | 149 | NCO | NC | 201 | BD[0] | I |
| 46 | RDY | TO | 98 | MD[13] | I/O | 150 | NCO | NC | 202 | BD[1] | I |
| 47 | INT1 | O | 99 | MD[1] | I/O | 151 | NCO | NC | 203 | BD[2] | I |
| 48 | INT2 | O | 100 | MD[14] | I/O | 152 | NCO | NC | 204 | BD[3] | I |
| 49 | INT3 | O | 101 | MD[0] | I/O | 153 | NCO | NC | 205 | BD[4] | I |
| 50 | GND | - | 102 | MD[15] | I/O | 154 | NCO | NC | 206 | BD[5] | I |
| 51 | DREQ | O | 103 | VDD18 | - | 155 | VDD18 | - | 207 | BD[6] | I |
| 52 | DACK | I | 104 | VDD33 | - | 156 | VDD33 | - | 208 | BD[7] | I |

NC: NO Connection
TO: Tri-State Output
AO: Analog Output
AI: Analog Input

### Functions (Bit stream input interface / SDRAM interface)

| PIN Name | I/O | Functions |
|---|---|---|
| BD[7:0] | I | Bit Stream data input. |
| BCLK | I | Strobe Signal from BD. |
| BDEN | I | The validity of the data extracted from BD is checked. |
| BDREQ | O | Data Request signal. |
| BSECH | I | Directs whether the data of BD is the head byte of a selector. |
| MD[15:0] | I/O | Data bus line with SDRAM |
| MA[11:0] | O | SDRAM Address bus line |
| MBA[1:0] | O | SDRAM Bank select line. |
| DCS | O | SDRAM Chip select. |
| DCS2 | O | SDRAM Chip select. |
| DCS3 | O | SDRAM Chip select. |
| DCS4 | O | SDRAM Chip select. |
| DCS5 | O | SDRAM Chip select. |
| RAS | O | SDRAM RAS (Row Address Strobe) control. |
| CAS | O | SDRAM CAS (Column Address Strobe) control. |
| DQMU | O | SDRAM DQM control. |
| DQML | O | SDRAM DQM control. |
| DWE | O | SDRAM WE control. |
| MCLK | O | SDRAM operation clock. |

### Functions (Video output interface)

| PIN Name | I/O | Functions |
|---|---|---|
| PXCLK | O | Pixel Clock, 27 MHz. |
| PXCLKP | O | Pixel Clock, 54 MHz. |
| PD[7:0] | O | Digital Pixel Data. |
| CSYNC | I | Composite SYNC signal input. |
| OSDKEY | O | OSD Key flag output. |
| PWD | O | Phase detecter output for external synchronous operation. |
| HSYNC | O | Horizontal SYNC output. |
| VSYNC | O | Vertical SYNC output. |

### Functions (Audio output interface)

| PIN Name | I/O | Functions |
|---|---|---|
| A00 | O | Serial PCM data for DAC. |
| A01 | O | Serial PCM data for DAC. |
| A02 | O | Serial PCM data for DAC. |
| A0D | O | Serial PCM data for DAC. |
| AAD | O | Ancillary data output. |
| DOCLK | O | PCM bit Clock. |
| LRCLK | O | Channel Clock output for PCM audio data. |
| DACCLK | O | Over-sampling Clock for DAC. |
| CDBCK | I | PCM Bit Clock inputted from CDDSP. |
| CDLRCK | I | L/R Clock inputted from CDDSP. |
| CDDIN | I | PCM audio data inputted from CDDSP. |
| CDATA | I | Digital audio interface input. |
| DOUT0 | O | Digital audio interface output. |
| DOUT1 | O | Digital audio interface output |

### Functions (Host interface)

| Pin Name | I/O | Functions |
|---|---|---|
| HD[15:0] | I/O | Data I/O. |
| HA[11:0] | I | Address input. |
| BHE | I | Byte High Enable input. |
| RE | I | Read Enable input. |
| WE | I | Write Enable input. |
| CS | I | Chip Select input. |
| RDY | O | Acknowledge signal which shows that read-out or the writing of data was completed. |
| INTR<br>INT2<br>INT3 | O | Interruption request signal over external CPU from M65776AFP.<br>“L” is outputted at the time of interruption generating and “H” is outputted when other. |
| DREQ | O | DMA request signal for bit map transmission. |
| DACK | I | DMA acknowledge signal for bit map transmission. |
| HMODE[1:0] | I | Host interface operation mode setting. |
| HMODE[2] | I | It fixed to “L” potential.. |

### Video DAC

| Pin Name | I/O | Functions |
|---|---|---|
| IREF | I | Reference current input. |
| AVRI | I | Reference voltage input. |
| BIAS1 | I | Bias voltage for the source of current. |
| BIAS2 | I | Bias voltage for the source of current. |
| PAY | O | Analog current output.(for Y) |
| PAB | O | Analog current output.(for Pb) |
| PAC | O | Analog current output.(for Pr) |
| DAOUTB | O | It fixed to Analog Ground.. |
| AVDD33 | Power | +3.3V Analog Power supply. |
| AGND33 | Power | Analog Ground. |

### System service

| Pin Name | I/O | Functions |
|---|---|---|
| CLKIN | I | 27 MHz, system Clock input. |
| CLKO | O | 27 MHz, Clock output. |
| ACLKI | I | Audio Clock input. |
| RESET | I | Hardware Reset. |
| TEST[2:0] | I | It fixed to “L” potential. |
| VDD18 | Power | +1.8 V Power for internal. |
| VDD33 | Power | +3.3 V Power for external interface. |
| GND | Power | Ground. |
| AVDD18 | Power | +1.8 V Power for internal PLL. |
| AGND18 | Power | It fixed to Ground. Ground for internal PLL. |

## Sil504CM208 (VI: IC701)

### Top View

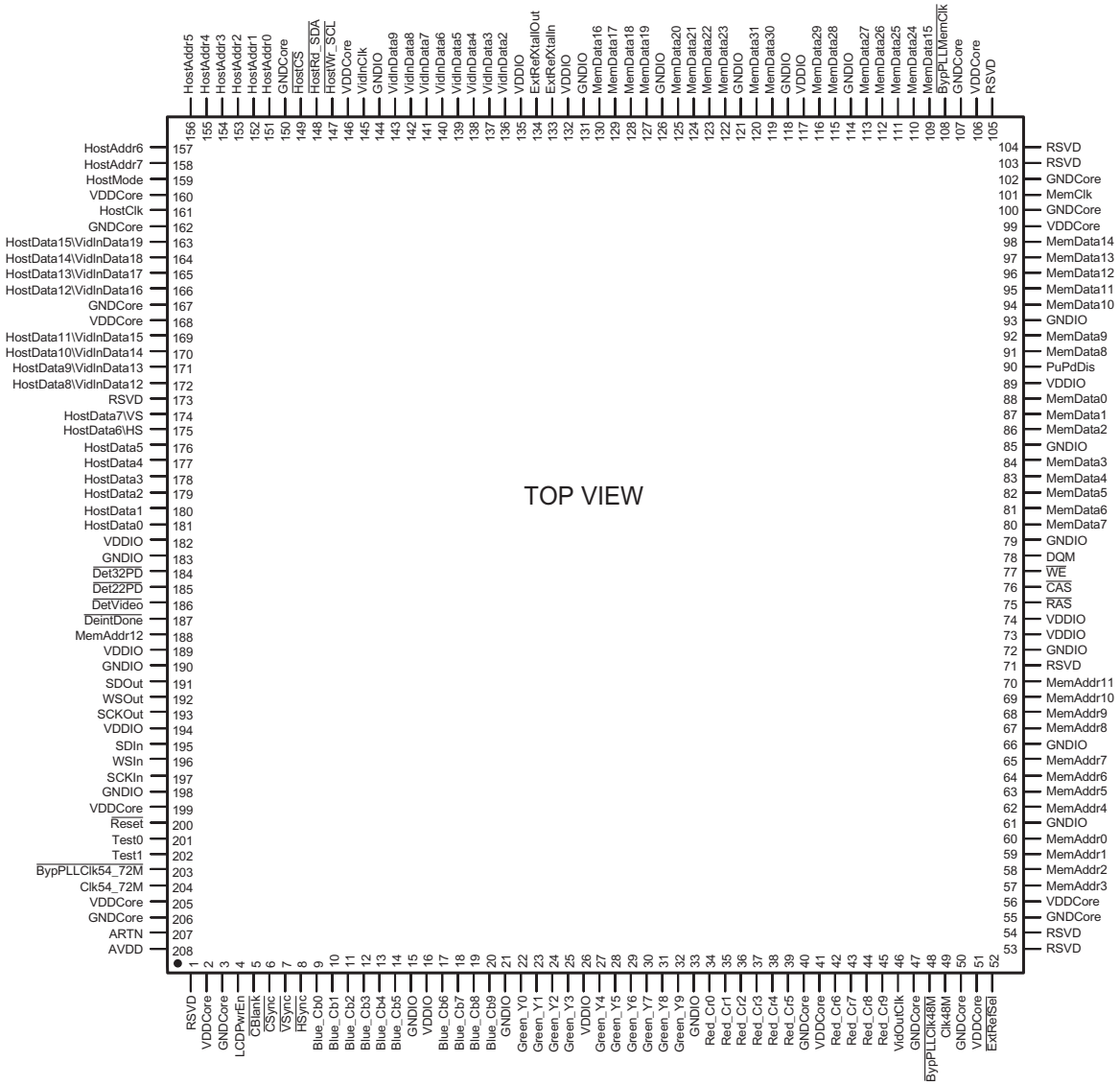


Sil504CM208 Terminal Function

| Pin No. | Pin Name | I/O | Function |
|---|---|---|---|
| 2, 41, 51, 56, 99, 106, 146, 160, 168, 199, 205 | VDDCore | Pwr | 1.8V Core Power. |
| 3, 40, 47, 50, 55, 100, 102, 107, 150, 162, 167, 206 | GNDCore | Pwr | Digital Ground for Core Power. |
| 4 | LCDPwrEn | Out | LCD Power Enable |
| 5 | $\overline{\text{CBlank}}$ | Out | Composite Blank |
| 6 | $\overline{\text{CSync}}$ | Out | Composite Sync |
| 7 | $\overline{\text{VSync}}$ | Out | Vertical Sync |
| 8 | $\overline{\text{HSync}}$ | Out | Horizontal Sync |
| 9~14, 17~20 | Blue_Cb[9:0] | Out | Blue Data (RGB output mode); Cb Data (YCrCb output mode) |
| 15, 21, 33, 61, 66, 72, 79, 85, 93, 114, 118, 121, 126, 131, 144, 183, 190, 198 | GNDIO | Pwr | Digital Ground for I/O Power. |

| Pin No. | Pin Name | I/O | Function |
|---|---|---|---|
| 16, 26, 73, 74, 89, 117, 132, 135, 182, 189, 194 | VDDIO | Pwr | 3.3V I/O Power. |
| 22~25, 27~32 | Green_Y[9:0] | Out | Green Data (RGB output mode); Y Data (YCrCb output mode) |
| 34~39, 42~45 | Red_Cr[9:0] | Out | Red Data (RGB output mode); Cr Data (YCrCb output mode) |
| 46 | VidOutClk | Out | Video Output Clock, 36, 27 or 24 MHZ |
| 48 | $\overline{\text{BypPLLClk48M}}$ | In | Bypass PLL for Clk48M. |
| 49 | Clk48M | InOut | 48 MHz Clock. |
| 52 | $\overline{\text{ExtRefSel}}$ | In | External APLL Reference Select. |
| 57~60, 62~65, 67~70, 188 | MemAddr[12:0] | InOut | SDRAM Address when an output. Configuration at reset when an input. |
| 75 | $\overline{\text{RAS}}$ | Out | SDRAM Row Address Strobe. |
| 76 | $\overline{\text{CAS}}$ | Out | SDRAM Column Address Strobe. |
| 77 | $\overline{\text{WE}}$ | Out | SDRAM Write Enable. |
| 78 | DQM | Out | SDRAM Data Mask. |
| 80~84, 86~88, 91, 92, 94~98, 109, 110~113, 115, 116, 119, 120, 122~125, 127~130 | MemData[31:0] | InOut | SDRAM Data. |
| 90 | PuPdDis | In | Internal pullup and pulldown disable test function. |
| 101 | MemClk | InOut | SDRAM Clock. |
| 108 | $\overline{\text{BypPLLMemClk}}$ | In | Bypass PLL for MemClk. |
| 133 | ExtRefXtalIn | In | External APLL Reference Crystal/oscillator Input. |
| 134 | ExtRefXtalOut | Out | External APLL Reference Crystal Output. |
| 136~143 | VidInData[9:2] | In | Multiplexed Video Input Data; Y Video Input Data. |
| 145 | VidInClk | In | Video Input Clock, 27.0 MHz |
| 147 | $\overline{\text{HostWr\_SCL}}$ | In | 186-Compatible Write when HostMode=0. Serial Clock when HostMode=1. |
| 148 | $\overline{\text{HostRd\_SDA}}$ | InOut | 186-Compatible Read when HostMode=0. Serial Data when HostMode=1. |
| 149 | $\overline{\text{HostCS}}$ | In | 186-Compatible Chip Select when HostMode=0.<br>When HostMode=1, must be tied to VDD or pulled up to VDD. |
| 151~158 | HostAddr[7:0] | In | 186-Compatible Address when HostMode=0. No connect when HostMode=1. |
| 159 | HostMode | In | Serial Host Interface when HostMode=1. 186-compatible host interface when HostMode=0. |
| 161 | HostClk | InOut | 186-Compatible Clock when HostMode=0. No connect when HostMode=1. |
| 163~166, 169~172 | HostData[15:8] (VidInData[19:2]) | InOut | 186-Compatible Data when HostMode=0. Chroma video input data when HostMode=1. |
| 174 | HostData[7](VS) | InOut | 186-Compatible Data when HostMode=0. Vertical sync input when HostMode=1. |
| 175 | HostData[6](HS) | InOut | 186-Compatible Data when HostMode=0. Horizontal sync input when HostMode=1. |
| 176~181 | HostData[5:0] | InOut | 186-Compatible Data when HostMode=0. No connect when HostMode=1. |
| 184 | $\overline{\text{Det32PD}}$ | Out | 3:2 Pulldown Sequence Detected. |
| 185 | $\overline{\text{Det22PD}}$ | Out | 2:2 Pulldown Sequence Detected. |
| 186 | $\overline{\text{DetVideo}}$ | Out | Interlaced Video Sequence Detected. |
| 187 | $\overline{\text{DeintDone}}$ | Out | Deinterlace processing complete for current field period. |
| 191 | SDOut | Out | Serial Digital Audio Output Data. |
| 192 | WSOut | Out | Serial Digital Audio Output Word Select. |
| 193 | SCKOut | Out | Serial Digital Audio Output Clock. |
| 195 | SDIn | In | Serial Digital Audio Input Data. |
| 196 | WSIn | In | Serial Digital Audio Input Word Select. |
| 197 | SCKIn | In | Serial Digital Audio Input Clock. |
| 200 | $\overline{\text{Reset}}$ | In | Hardware Reset. |
| 201, 202 | Test[1:0] | In | Production hardware test support. |
| 203 | $\overline{\text{BypPLLClk54\_72M}}$ | In | Bypass PLL for Clk54_72M. |
| 204 | Clk54_72M | InOut | 54 or 72 MHz Clock. |
| 207 | ARTN | Pwr | Analog Return for PLLs. |
| 208 | AVDD | Pwr | 1.8V Analog Power for PLL. |

## CXD-2753R (MA: IC401)

### Pin Assignment

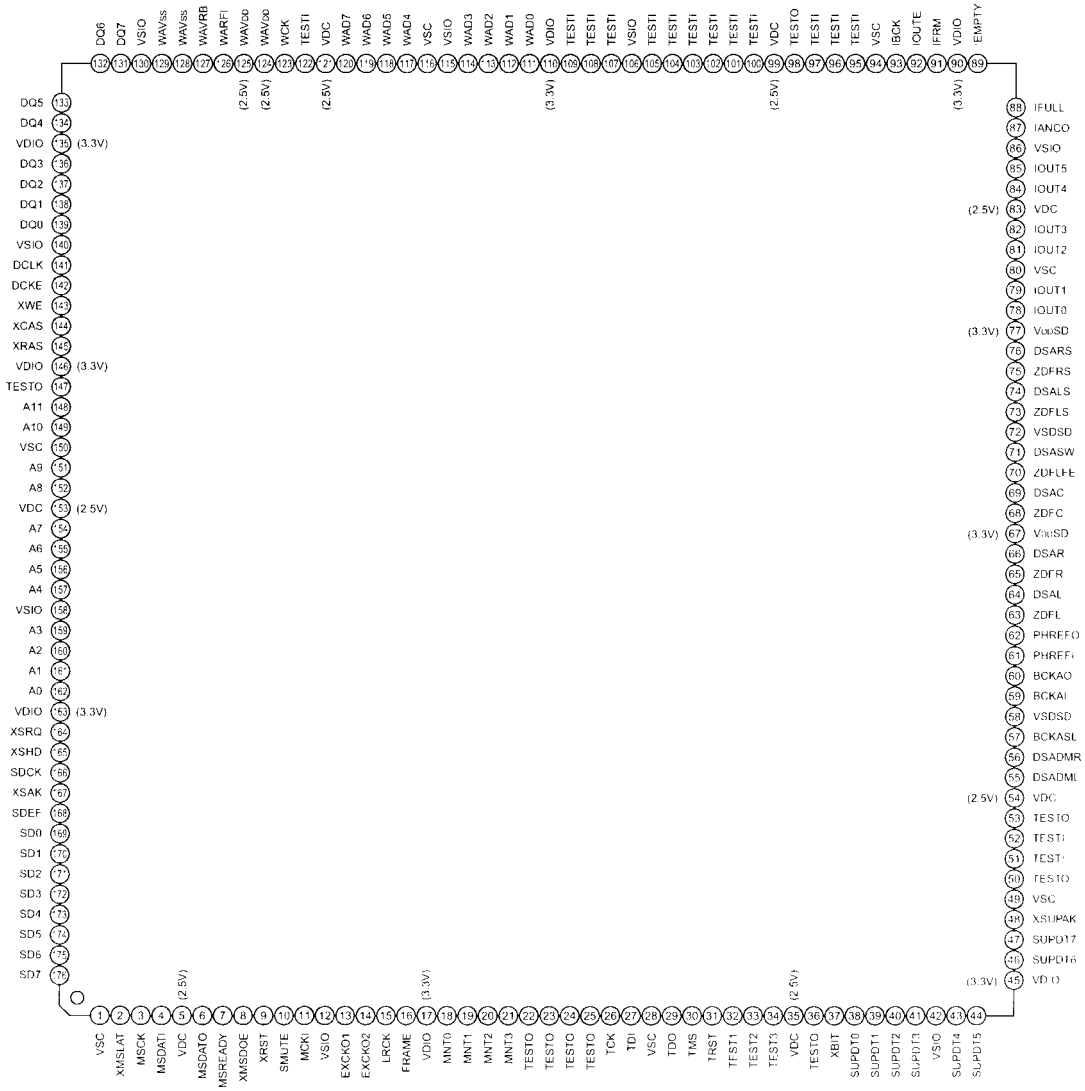


### Block Diagram

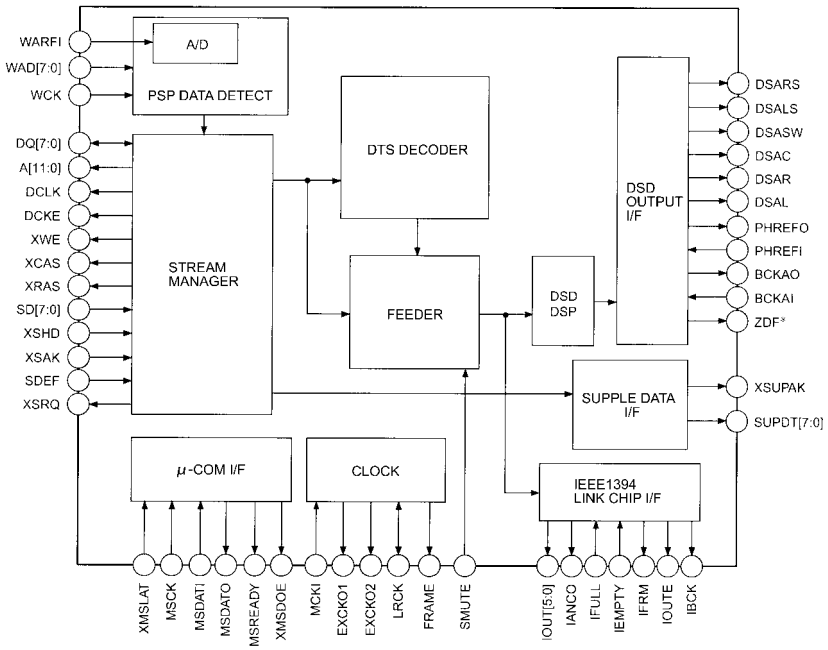

**Terminal Functions**

| | Pin Name | I/O | Functions |
|---|---|---|---|
| 1 | VSC | - | It fixed to ground.( for Core) |
| 2 | XMSLAT | I | Latch input for μCOM serial communication. |
| 3 | MSCK | I | Shift clock input for μCOM serial communication. |
| 4 | MSDATI | I | Data input for μCOM serial communication. |
| 5 | VDC | - | +2.5V Power for Core. |
| 6 | MSDATO | O | Data output for μCOM serial communication. “Hi-Z” potential except the output mode. |
| 7 | MSREADY | O | Completion flag of output preparation for μCOM serial communication. “L” is outputted at the time of completion. |
| 8 | XMSDOE | O | Output enable pin for μCOM serial communication. “L” is outputted at the time of MSDATO mode. |
| 9 | XRST | I | Reset pin. The whole IC is reset by at the time of “L” potential. |
| 10 | SMUTE | Ipd | Soft Mute. Soft mute of the audio output is carried out at the time of “H” potential. It releases at the time of “L” potential. |
| 11 | MCKI | I | Master Clock input. |
| 12 | VSIO | - | It fixed to Ground. Ground for I/O. |
| 13 | EXCKO1 | O | External output Clock 1. |
| 14 | EXCKO2 | O | External output Clock 2. |
| 15 | LRCK | O | 44.1kHz, 1Fs Clock output. |
| 16 | FRAME | O | Frame signal output. |
| 17 | VDIO | - | +3.3V Power for I/O. |
| 18 | MNT0 | O | Monitor output. |
| 19 | MNT1 | O | Monitor output. |
| 20 | MNT2 | O | Monitor output. |
| 21 | MNT3 | O | Monitor output. |
| 22 | TESTO | O | Output terminal for a Test. (open) |
| 23 | TESTO | O | Output terminal for a Test.(open) |
| 24 | TESTO | O | Output terminal for a Test.(open) |
| 25 | TESTO | O | Output terminal for a Test.(open) |
| 26 | TCK | I | Clock input for a Test. It fixed to “L” potential. |
| 27 | TDI | Ipu | Input pin(pull-up) for a Test.(open) |
| 28 | VSC | - | It fixed to Ground. Ground for CORE. |
| 29 | TDO | O | Output for a Test.(open). |
| 30 | TMS | Ipu | Input pin(pull-up) for a Test.(open) |
| 31 | TRST | Ipu | Reset pin(pull-up) for a Test. Input the Power-on reset signal or fixed to “L” potential. |
| 32 | TEST1 | I | Test input pin. It fixed to “L” potential. |
| 33 | TEST2 | I | Test input pin. It fixed to “L” potential. |
| 34 | TEST3 | I | Test input pin. It fixed to “L” potential. |
| 35 | VDC | - | +2.5V Power for CORE. |
| 36 | TESTO | O | Out put for TEST. It fixed to open. |
| 37 | XBIT | O | DST monitor. |
| 38 | SUPDT0 | O | Supplementary data output. (LSB) |
| 39 | SUPDT1 | O | Supplementary data output. |
| 40 | SUPDT2 | O | Supplementary data output. |
| 41 | SUPDT3 | O | Supplementary data output. |
| 42 | VSIO | - | Ground for I/O. |
| 43 | SUPDT4 | O | Supplementary data output. |
| 44 | SUPDT5 | O | Supplementary data output. |
| 45 | VDIO | - | +3.3V Power for I/O. |
| 46 | SUPDT6 | O | Supplementary data output. |
| 47 | SUPDT7 | O | Supplementary data output. (MSB) |
| 48 | XSUPAK | O | Supplementary data Acknowledge output terminal. |
| 49 | VSC | - | Ground for CORE. |

| | Pin Name | I/O | Functions |
|---|---|---|---|
| 50 | TESTO | O | Output for TEST. (open) |
| 51 | TESTI | I | Input for TEST. It fixed to “L” potential. |
| 52 | TESTI | I | Input for TEST. It fixed to “L” potential. |
| 53 | TESTO | O | Output for TEST. (open) |
| 54 | VDC | - | +2.5V Power for CORE. |
| 55 | DSADML | O | DSD Data output terminal for Lch Down Mix. |
| 56 | DSADMR | O | DSD Data output terminal for Rch Down Mix. |
| 57 | BCKASL | I | I/O selection terminal of the Bit clock for DSD data output. L=input (Slave), H=output (Master) |
| 58 | VSDSD | - | Ground terminal for DSD data output. |
| 59 | BCKAI | I | Bit clock input terminal for DSD data output.<br>Input a Bit clock into this terminal at the time of BCKASL=”L” potential. |
| 60 | BCKAO | O | Bit clock output terminal for DSD data output.<br>Bit clock output from this terminal at the time of BCKASL=”H” potential. |
| 61 | PHREFI | I | Reference phase signal input terminal for DSD output phase modulation. |
| 62 | PHREFO | O | Reference phase signal output terminal for DSD output phase modulation. |
| 63 | ZDFL | O | Lch zero-data detection flag (at the time of µcom setup).<br>It will be set to “H” if non-sound data continues 300 msecs. |
| 64 | DSAL | O | DSD data output terminal for Lch speaker. |
| 65 | ZDFR | O | Rch zero-data detection flag (at the time of µcom setup).<br>It will be set to “H” if non-sound data continues 300 msecs. |
| 66 | DSAR | O | DSD data output terminal for Rch speaker. |
| 67 | $V_{DD}$SD | - | +3.3V Power for DSD data output. |
| 68 | ZDFC | O | Cch zero-data detection flag (at the time of µcom setup).<br>It will be set to “H” if non-sound data continues 300 msecs. |
| 69 | DSAC | O | DSD data output terminal for Cch speaker. |
| 70 | ZDFLFE | O | LFEch zero-data detection flag (at the time of µcom setup).<br>It will be set to “H” if non-sound data continues 300 msecs. |
| 71 | DSASW | O | DSD data output terminal for SWch speaker. |
| 72 | VSDSD | - | Ground for DSD data output. |
| 73 | ZDFLS | O | LSch zero-data detection flag (at the time of µcom setup).<br>It will be set to “H” if non-sound data continues 300 msecs. |
| 74 | DSALS | O | DSD data output terminal for LSch speaker. |
| 75 | ZDFRS | O | RSch zero-data detection flag (at the time of µcom setup).<br>It will be set to “H” if non-sound data continues 300 msecs. |
| 76 | DSARS | O | DSD data output terminal for RSch speaker. |
| 77 | $V_{DD}$SD | O | +3.3V Power for DSD data output. |
| 78 | IOUT0 | O | Data output terminal 0 for IEEE1394 link chip I/F. |
| 79 | IOUT1 | O | Data output terminal 1 for IEEE1394 link chip I/F. |
| 80 | VSC | - | Ground for CORE. |
| 81 | IOUT2 | O | Data output terminal 2 for IEEE1394 link chip I/F. |
| 82 | IOUT3 | O | Data output terminal 3 for IEEE1394 link chip I/F. |
| 83 | VDC | - | +2.5V Power for CORE. |
| 84 | IOUT4 | O | Data output terminal 4 for IEEE1394 link chip I/F. |
| 85 | IOUT5 | O | Data output terminal 5 for IEEE1394 link chip I/F. |
| 86 | VSIO | - | Ground for I/O. |
| 87 | IANCO | O | Transmission information data output terminal for IEEE1394 link chip I/F. |
| 88 | IFULL | I | Data transmission hold request signal input terminal for IEEE1394 link chip I/F. |
| 89 | IEMPTY | I | High speed transmission request signal input terminal for IEEE1394 link chip I/F. |
| 90 | VDIO | - | +3.3V Power for I/O. |
| 91 | IFRM | O | Frame reference signal output terminal for IEEE1394 link chip I/F. |
| 92 | IOUTE | O | Enable signal output terminal for IEEE1394 link chip I/F. |
| 93 | IBCK | O | Data transmission clock output terminal for IEEE1394 link chip I/F. |
| 94 | VSC | - | Ground for CORE. |
| 95 | TESTI | I | TEST input terminal. It fixed to “H” potential. |

| | Pin Name | I/O | Functions |
|---|---|---|---|
| 96 | TESTI | I | TEST input terminal. It fixed to “L” potential. |
| 97 | TESTI | Ipu | TEST input terminal. It fixed to “H” potential. |
| 98 | TESTO | O | TEST output terminal. (open) |
| 99 | VDC | - | +2.5V Power for CORE. |
| 100 | TESTI | I | TEST input terminal. It fixed to “L” potential. |
| 101 | TESTI | I | TEST input terminal. It fixed to “L” potential. |
| 102 | TESTI | I | TEST input terminal. It fixed to “L” potential. |
| 103 | TESTI | I | TEST input terminal. It fixed to “L” potential. |
| 104 | TESTI | I | TEST input terminal. It fixed to “L” potential. |
| 105 | TESTI | I | TEST input terminal. It fixed to “L” potential. |
| 106 | VSIO | - | Ground for I/O. |
| 107 | TESTI | I | TEST input terminal. It fixed to “L” potential. |
| 108 | TESTI | I | TEST input terminal. It fixed to “L” potential. |
| 109 | TESTI | I | TEST input terminal. It fixed to “L” potential. |
| 110 | VDIO | - | +3.3V Power for I/O. |
| 111 | WAD0 | I | External A/D data input terminal(LSB) for PSP physical disc mark detection. |
| 112 | WAD1 | I | External A/D data input terminal for PSP physical disc mark detection. |
| 113 | WAD2 | I | External A/D data input terminal for PSP physical disc mark detection. |
| 114 | WAD3 | I | External A/D data input terminal for PSP physical disc mark detection. |
| 115 | VSIO | - | Ground for I/O. |
| 116 | VSC | - | Ground for CORE. |
| 117 | WAD4 | I | External A/D data input terminal for PSP physical disc mark detection. |
| 118 | WAD5 | I | External A/D data input terminal for PSP physical disc mark detection. |
| 119 | WAD6 | I | External A/D data input terminal for PSP physical disc mark detection. |
| 120 | WAD7 | I | External A/D data input terminal(MSB) for PSP physical disc mark detection. |
| 121 | VDC | - | +2.5V Powe for CORE. |
| 122 | TESTI | I | TEST input terminal. It fixed to “L” potential. |
| 123 | WCK | I | Operation clock for PSP physical disc mark detection. |
| 124 | $WAV_{DD}$ | - | +2.5V Power. A/D Power supply for PSP physical disc mark detection. |
| 125 | $WAV_{DD}$ | - | +2.5V Power. A/D Power supply for PSP physical disc mark detection. |
| 126 | WARFI | Ai | Analog RF signal input terminal for PSP physical disc mark detection. |
| 127 | WAVRB | Ai | A/D bottom reference terminal for PSP physical disc mark detection. |
| 128 | $WAV_{SS}$ | - | A/D Ground terminal for PSP physical disc mark detection. |
| 129 | $WAV_{SS}$ | - | A/D Ground terminal for PSP physical disc mark detection. |
| 130 | VSIO | - | Ground for I/O. |
| 131 | DQ7 | I/O | SDRAM data input/output terminal. (MSB) |
| 132 | DQ6 | I/O | SDRAM data input/output terminal. |
| 133 | DQ5 | I/O | SDRAM data input/output terminal. |
| 134 | DQ4 | I/O | SDRAM data input/output terminal. |
| 135 | VDIO | - | +3.3V Power for I/O. |
| 136 | DQ3 | I/O | SDRAM data input/output terminal. |
| 137 | DQ2 | I/O | SDRAM data input/output terminal. |
| 138 | DQ1 | I/O | SDRAM data input/output terminal. |
| 139 | DQ0 | I/O | SDRAM data input/output terminal. (LSB) |
| 140 | VSIO | - | Ground for I/O. |
| 141 | DCLK | O | Clock output terminal for SDRAM. |
| 142 | DCKE | O | Clock enable output terminal for SDRAM. |
| 143 | XWE | O | Write enable output terminal for SDRAM. |
| 144 | XCAS | O | Colomn address strobe output terminal for SDRAM. |
| 145 | XRAS | O | Row address strobe output terminal for SDRAM. |
| 146 | VDIO | - | +3.3V Power for I/O. |
| 147 | TESTO | O | Output terminal for TEST. (open) |

| | Pin Name | I/O | Functions |
|---|---|---|---|
| 148 | A11 | O | Address output terminal for SDRAM. (MSB) |
| 149 | A10 | O | Address output terminal for SDRAM. |
| 150 | VSC | - | Ground for CORE. |
| 151 | A9 | O | Address output terminal for SDRAM. |
| 152 | A8 | O | Address output terminal for SDRAM. |
| 153 | VDC | - | +2.5V Power for CORE. |
| 154 | A7 | O | Address output terminal for SDRAM. |
| 155 | A6 | O | Address output terminal for SDRAM. |
| 156 | A5 | O | Address output terminal for SDRAM. |
| 157 | A4 | O | Address output terminal for SDRAM. |
| 158 | VSIO | - | Ground for I/O. |
| 159 | A3 | O | Address output terminal for SDRAM. |
| 160 | A2 | O | Address output terminal for SDRAM. |
| 161 | A1 | O | Address output terminal for SDRAM. |
| 162 | A0 | O | Address output terminal for SDRAM. (LSB) |
| 163 | VDIO | - | +3.3V Power for I/O. |
| 164 | XSRQ | O | Output terminal of the Data Request signal inputted a front-end processor. |
| 165 | XSHD | I | Input terminal of the header Flag outputted from a front-end processor. |
| 166 | SDCK | I | Input terminal of the data conveyance Clock outputted from a front-end processor. |
| 167 | XASK | I | Input terminal of the data valid Flag outputted from a front-end processor. |
| 168 | SDEF | I | Input terminal of the error Flag outputted from a front-end processor. |
| 169 | SD0 | I | Input terminal of the stream Data outputted from a front-end processor. |
| 170 | SD1 | I | Input terminal of the stream Data outputted from a front-end processor. |
| 171 | SD2 | I | Input terminal of the stream Data outputted from a front-end processor. |
| 172 | SD3 | I | Input terminal of the stream Data outputted from a front-end processor. |
| 173 | SD4 | I | Input terminal of the stream Data outputted from a front-end processor. |
| 174 | SD5 | I | Input terminal of the stream Data outputted from a front-end processor. |
| 175 | SD6 | I | Input terminal of the stream Data outputted from a front-end processor. |
| 176 | SD7 | I | Input terminal of the stream Data outputted from a front-end processor. |

Ipu: Pull-up input  Ipd: Pull-down input  Ai: Analog input

**M32102S6FP (MA: IC102)**

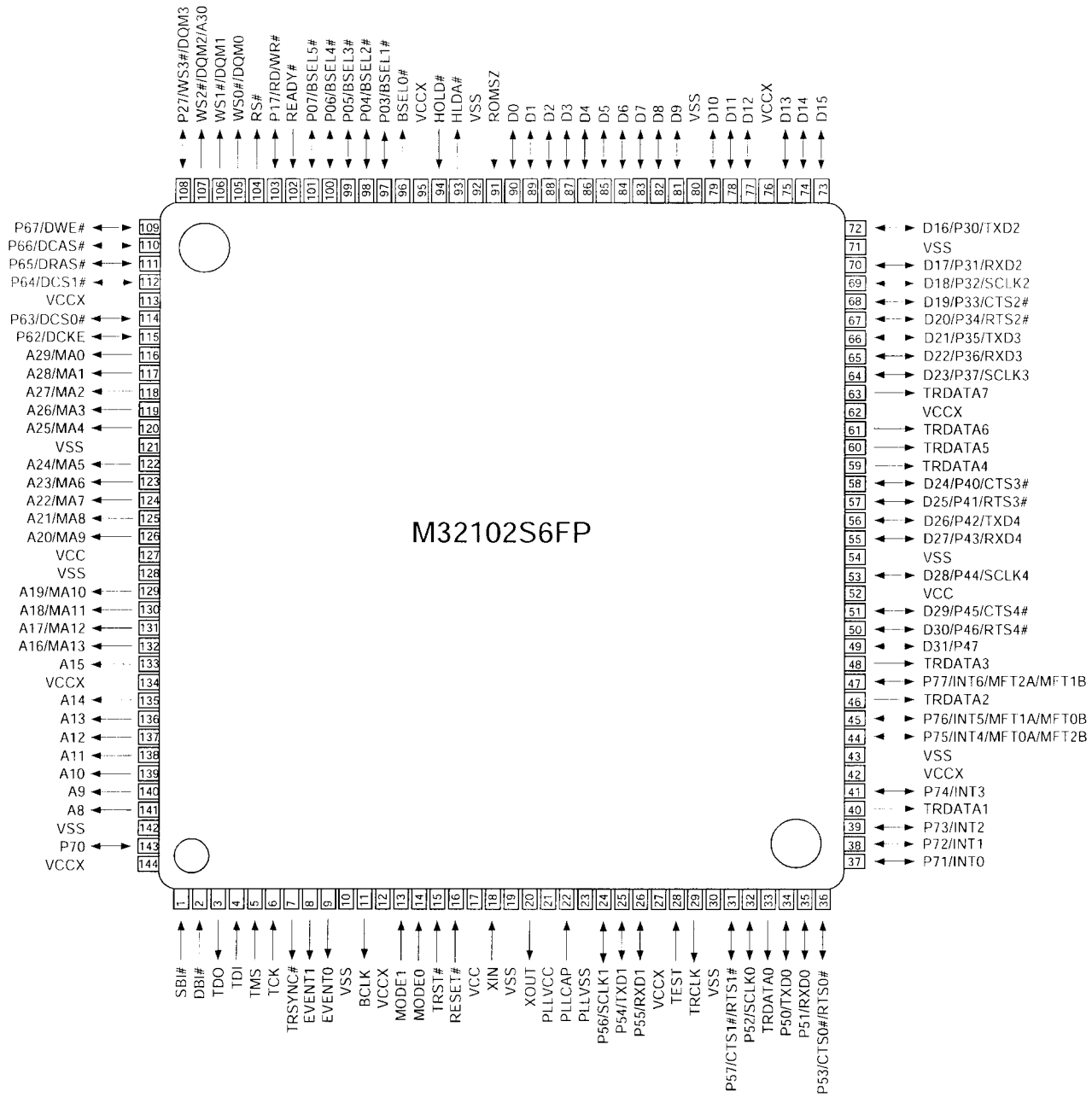

## 64M SDRAM (VI: IC702)

W986432AH

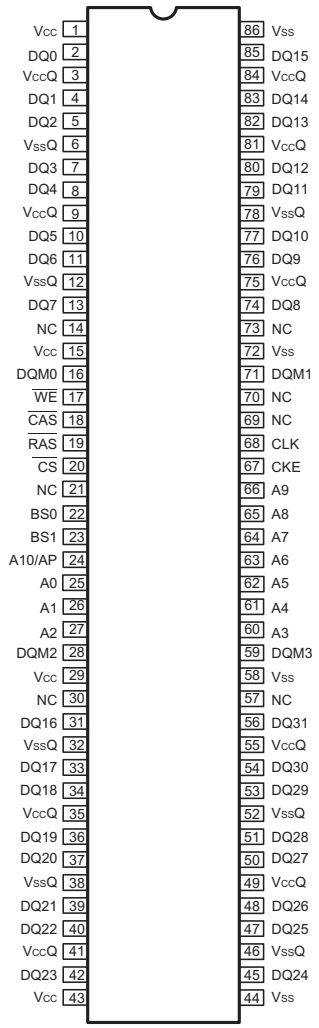


W986432AH Terminal Function

| Pin No. | Pin Name | Function |
|---|---|---|
| 25~27, 60~66, 24 | A0-A10 | Address for row and column |
| 22, 23 | BS0, BS1 | Bank Select to activate during row address latch time |
| 2, 4, 5, 7, 8, 10, 11 ,13, 31, 33, 34, 36, 37, 39, 40, 42, 45, 47, 48, 50, 51, 53, 54, 56, 74, 76, 77, 79, 80, 82, 83, 85 | DQ0-DQ31 | Data Input / Output pins for data |
| 20 | $\overline{CS}$ | Chip Selec to disable or enable the command decoder |
| 19 | $\overline{RAS}$ | Row Address Strobe |
| 18 | $\overline{CAS}$ | Column Address Strobe |
| 17 | $\overline{WE}$ | Write Enable |
| 16, 28, 59, 71 | DQM0-DQM3 | Input / Out put Mask |
| 68 | CLK | Clock Inputs |
| 67 | CKE | Clock Enable |
| 1, 15, 29, 43 | VCC | Power (+3.3V) |
| 44, 58, 72, 86 | VSS | Ground |
| 3, 9, 35, 41, 49, 55, 75, 81 | VCCQ | Power (+3.3V) for I/O Buffer |
| 6, 12, 32, 38, 46, 52, 78, 84 | VSSQ | Ground for I/O Buffer |
| 14, 21, 30, 57, 69, 70, 73 | NC | No Connection |

**ML9207-01 (PD: IC101)**

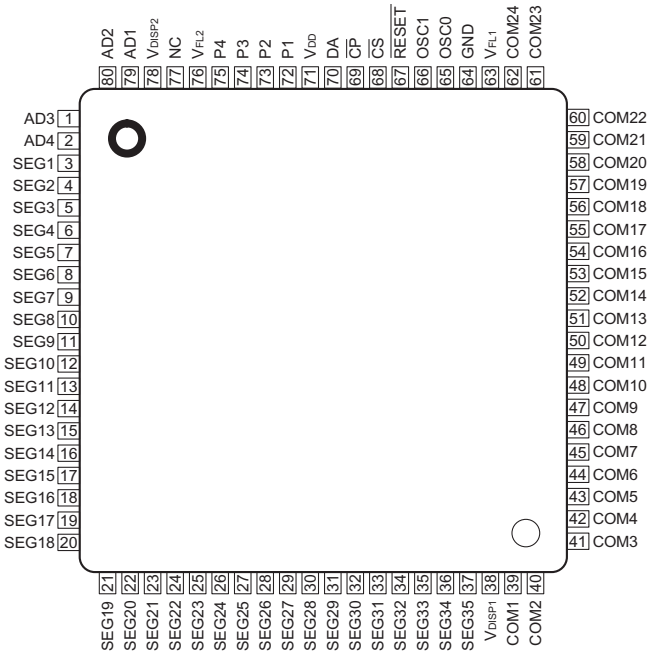


ML9207-01 Terminal Function

| Pin No. | Pin Name | I/O | Function |
|---|---|---|---|
| 3~37 | SEG1~35 | O | FL display anode drive output pin |
| 39~62 | COM1~24 | O | FL display grid drive output pin |
| 1,2, 79, 80 | AD1~4 | O | FL display anode drive output pin |
| 72~75 | P1~4 | O | General port output pin |
| 71 | $V_{DD}$ | | $V_{DD}$-GND: Power supply for logic block<br>$V_{DISP}$-$V_{FL}$: Power supply for FL display drive<br>For $V_{DD}$ and $V_{DISP}$, apply from same power source |
| 38, 78 | $V_{DISP1\sim2}$ | | |
| 64 | GND | | |
| 63, 76 | $V_{FL1\sim2}$ | | |
| 70 | DA | I | Serial data input pin (positive logic) |
| 69 | $\overline{CP}$ | I | Shift clock input pin |
| 68 | $\overline{CS}$ | I | Chip select input pin |
| 67 | $\overline{RESET}$ | I | Reset input pin |
| 65 | OSC0 | I | Pin for self-oscillation |
| 66 | OSC1 | O | |

## ADV7190 (VI: IC705) For Europe model

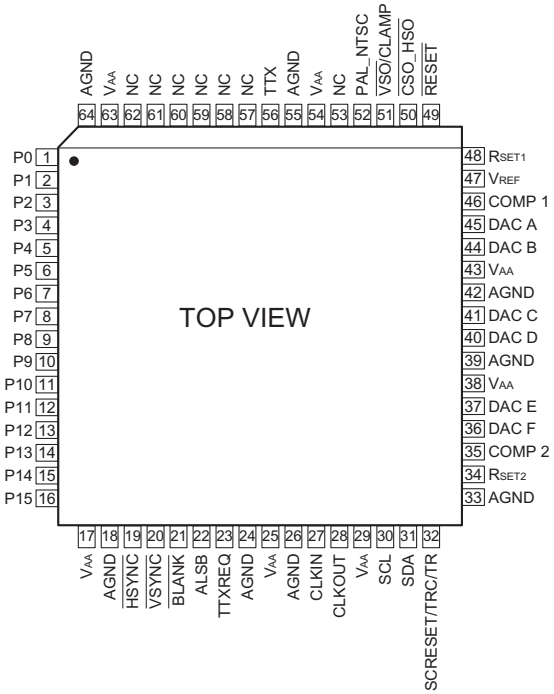


ADV7190 Terminal Function

| Pin No. | Pin Name | I/O | Function |
|---|---|---|---|
| 1~16 | P0-P15 | I | 8-Bit or 16-Bit 4:2:2 Multiplexed YCrCb Pixel Port. The LSB of the input data is set up on Pin P0. |
| 17, 25, 29, 38, 43, 54, 63 | VAA | P | Analog Power Supply (3.3V to 5V). |
| 18, 24, 26, 33, 39, 42, 55, 64 | AGND | G | Analog Ground. |
| 19 | $\overline{\text{HSYNC}}$ | I/O | $\overline{\text{HSYNC}}$ (Modes 1, 2, and 3) Control Signal. This pin may be configured to be an output (Master Mode) or an input (Slave Mode) and accept Sync Signals. |
| 20 | $\overline{\text{VSYNC}}$ | I/O | $\overline{\text{VSYNC}}$ Control Signal. This pin may be configured as an output (Master Mode) or as an input (Slave Mode) and accept $\overline{\text{VSYNC}}$ as a Control Signal. |
| 21 | $\overline{\text{BLANK}}$ | I/O | Video Blanking Control Signal. This signal is optional. For further information see Vertical Blanking Data Insertion and $\overline{\text{BLANK}}$ Input section. |
| 22 | ALSB | I | TTL Address Input. This signal sets up the LSB of the MPU address. |
| 23 | TTXREQ | O | Teletext Data Request Output Signal, used to control teletext data transfer. |
| 27 | CLKIN | I | TTL Clock Input. Requires a stable 27 MHz reference clock for standard operation. Alternatively, a 24.5454 MHz (NTSC) or 29.5 MHz (PAL) can be used for square pixel operation. |
| 28 | CLKOUT | O | Clock Output Pin. |
| 30 | SCL | I | MPU Port Serial Interface Clock Input. |
| 31 | SDA | I/O | MPU Port Serial Data Input/Output. |
| 32 | SCRESET/RTC/TR | I | Multifunctional Input: Real-Time Control (RTC) Input, Timing Reset Input, Subcarrier Reset Input. |
| 34 | RSET2 | I | A 1200 ohm resistor connected from this pin to ground is used to control full-scale amplitudes of the Video Signals from DACs D, E, and F. |
| 35 | COMP 2 | O | Compensation Pin for DACs D, E, and F. Connect a 0.1$\mu$F Capacitor from COMP2 toVAA. |
| 36 | DAC F | O | S-Video C/V/RED Analog Output. This DAC is capable of providing 4.33 mA output. |
| 37 | DAC E | O | S-Video Y/U/BLUE Analog Output. This DAC is capable of providing 4.33 mA output. |
| 40 | DAC D | O | Composite/Y/GREEN Analog Output. This DAC is capable of providing 4.33 mA output. |
| 41 | DAC C | O | S-Video C/V/RED Analog Output. This DAC is capable of providing 4.33 mA output. |
| 44 | DAC B | O | S-Video Y/U/BLUE Analog Output. This DAC is capable of providing 4.33 mA output. |
| 45 | DAC A | O | Composite/Y/GREEN Analog Output. This DAC is capable of providing 4.33 mA output. |
| 46 | COMP 1 | O | Compensation Pin for DACs A, B, and C. Connect a 0.1$\mu$F Capacitor from COMP1 toVAA. |
| 47 | VREF | I/O | Voltage Reference Input for DACs or Voltage Reference Output (1.235V). An external VREF cannot be used in 4x oversampling mode. |
| 48 | RSET1 | I | A 1200 ohm resistor connected from this pin to ground is used to control full-scale amplitudes of the Video Signals from DACs A, B, and C. |
| 49 | $\overline{\text{RESET}}$ | I | The input resets the on-chip timing generator and sets the ADV7190/ADV7191 into default mode. See Appendix 8 for Default Register Settings. |
| 50 | $\overline{\text{CSO\_HSO}}$ | O | Dual function $\overline{\text{CSO}}$ or $\overline{\text{HSO}}$ Output Sync Signal at TTL Level. |
| 51 | $\overline{\text{VSO}}$/CLAMP | I/O | Multifunction Pin. $\overline{\text{VSO}}$ Output Sync Signal at TTL level. CLAMP TTL Output Signals can be used to drive external circuitry to enable clamping of all Video Signals. |
| 52 | PAL_NTSC | I | Input signal to select PAL or NTSC mode of operation, pin set to Logic 1 selects PAL. |
| 53, 57~62 | NC | | No Connect. |
| 56 | TTX | I | Teletext Data Input Pin. |

## ADV7300 (VI: IC704)

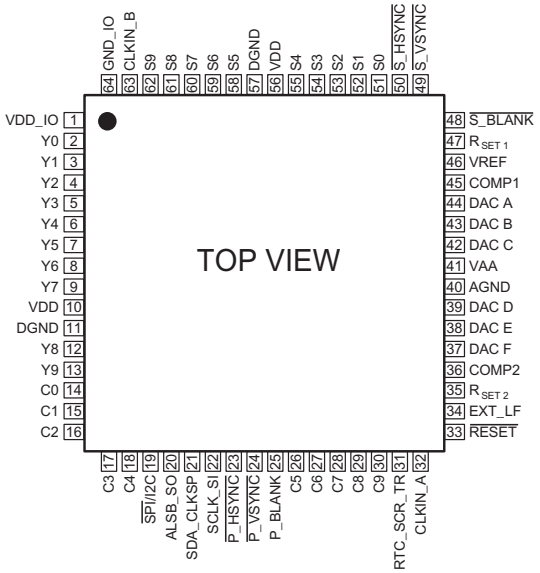


### ADV7300 Terminal Function

| Pin No. | Pin Name | I/O | Function |
|---|---|---|---|
| 1 | VDD_IO | P | Digital power supply. |
| 2~9, 12, 13 | Y9-0 | I | 10-Bit Progressive scan/ HDTV input port for Y data. |
| 10, 56 | VDD | P | Digital power supply. |
| 11, 57 | DGND | G | Digital Ground |
| 14~18, 26~30 | C9-0 | I | 10-Bit Progressive scan/ HDTV input port for CrCb color data in 4:2:2 input mode. |
| 19 | SPI/I2C | I | When this input pin is brought low, the ADV7300 interfaces over the SPI port and uses this input as part of the 4 wire SPI interface. When this input pin is tied high [VDD_IO], the ADV7300 interfaces over the I2C port. |
| 20 | ALSB_SO | I/O | Multifunctional pin. |
| 21 | SDA_CLKSP | I/O | Multifunctional pin. |
| 22 | SCLK_SI | I | Multifunctional input. |
| 23 | P_HSYNC | I | Video Horizontal Sync Control Signal for HD sync in simultaneous SD/HD mode and HD only mode. |
| 24 | P_VSYNC | I | Video Vertical Sync Control Signal for HD sync in simultaneous SD/HD mode and HD only mode. |
| 25 | P_BLANK | I | Video Blanking Control Signal for HD sync in simultaneous SD/HD mode and HD only mode. |
| 31 | RTC_SCR_TR | I | Multifunctional input. |
| 32 | CLKIN_A | I | Pixel Clock Input for HD only or SD only modes. |
| 33 | RESET | I | This input resets the on-chip timing generator and sets the ADV7300 into Default Register setting. Reset is an active low signal. |
| 34 | EXT_LF | I | External Loop filter for the internal PLL. |
| 35, 47 | RSET1,2 | I | A1520 Ohms resistor must be connected from this pin to AGND and is used to control the amplitudes of the DAC outputs. |
| 36,45 | COMP | O | Compensation Pin for DACs. |
| 37 | DAC F | O | In SD only mode: Chroma/RED/V analog output.<br>In HD only mode and simultaneus HD/SD: Pb/ BLUE (HD) analog output. |
| 38 | DAC E | O | In SD only mode: Luma/BLUE/U analog output.<br>In HD only mode and simultaneus HD/SD: Pr/ RED (HD) analog output. |
| 39 | DAC D | O | In SD only mode: CVBS/GREEN/Y analog output.<br>In HD only mode and simultaneus HD/SD: Y/ GREEN (HD) analog output. |
| 40 | AGND | G | Analog Ground |
| 41 | VAA | P | Analog power supply. |
| 42 | DAC C | O | Chroma/ RED/ V SD analog output. |
| 43 | DAC B | O | Luma/ BLUE/ U SD analog output. |
| 44 | DAC A | O | CVBS/ GREEN/ Y SD analog output. |
| 46 | VREF | I/O | Optional External Voltage Reference Input for DACs or Voltage Reference Output (1.235V). |
| 48 | S_BLANK | I/O | Video Blanking Control Signal for SD. |
| 49 | S_VSYNC | I/O | Video Vertical Sync Control Signal for SD. |
| 50 | S_HSYNC | I/O | Video Horizontal Control Signal for SD. |
| 51~55, 58~62 | S9-S0 | I | 10-Bit Standard Definition input port. Or Progressive Scan/ HDTV input port for Cr [Red/V] color data in 4:4:4 input mode. |
| 63 | CLKIN_B | I | Pixel Clock Input. |
| 64 | GND_IO | G | Digital Ground |

**CXD1881AR (MA: IC501)**

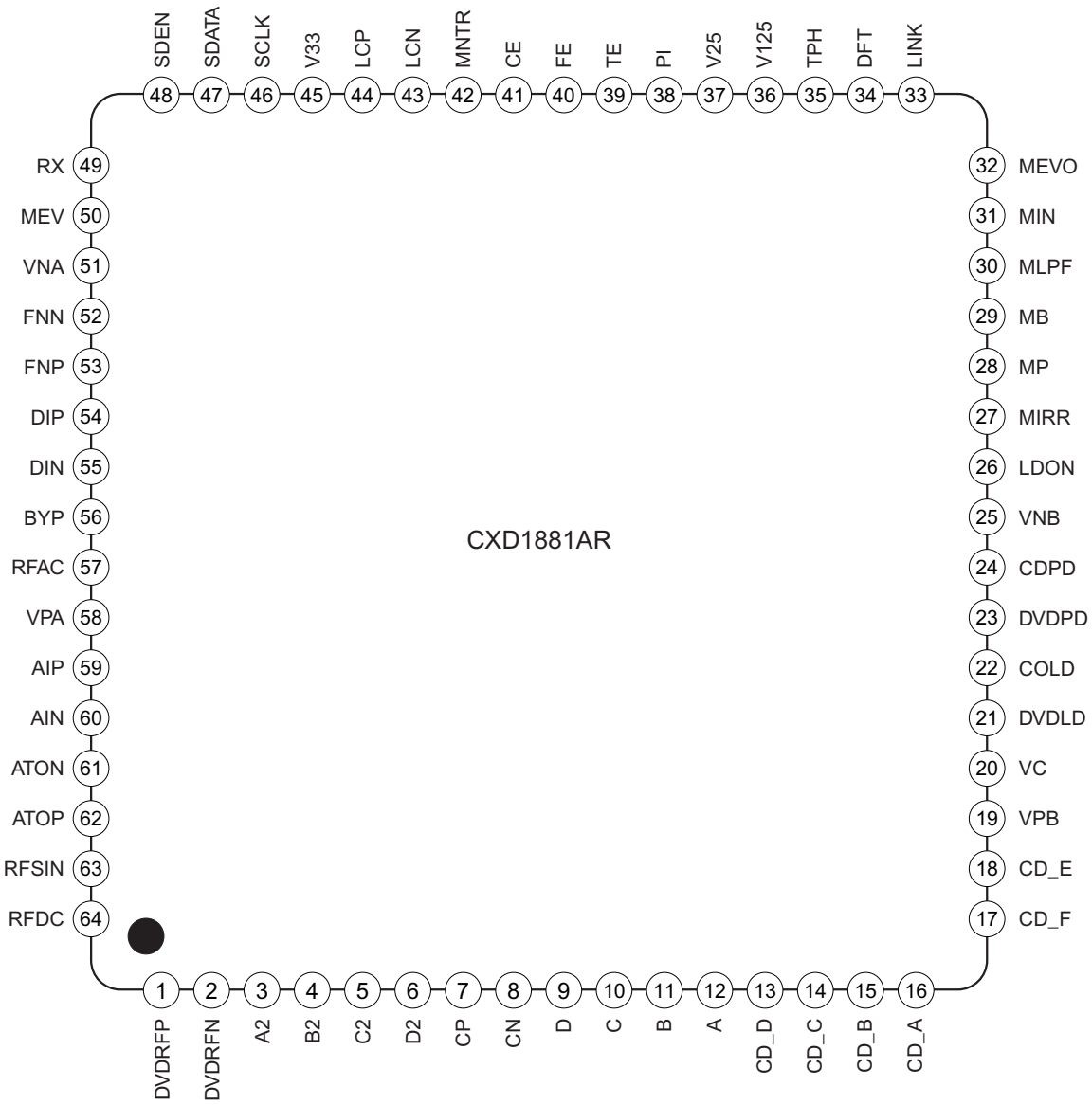

## Block Diagram

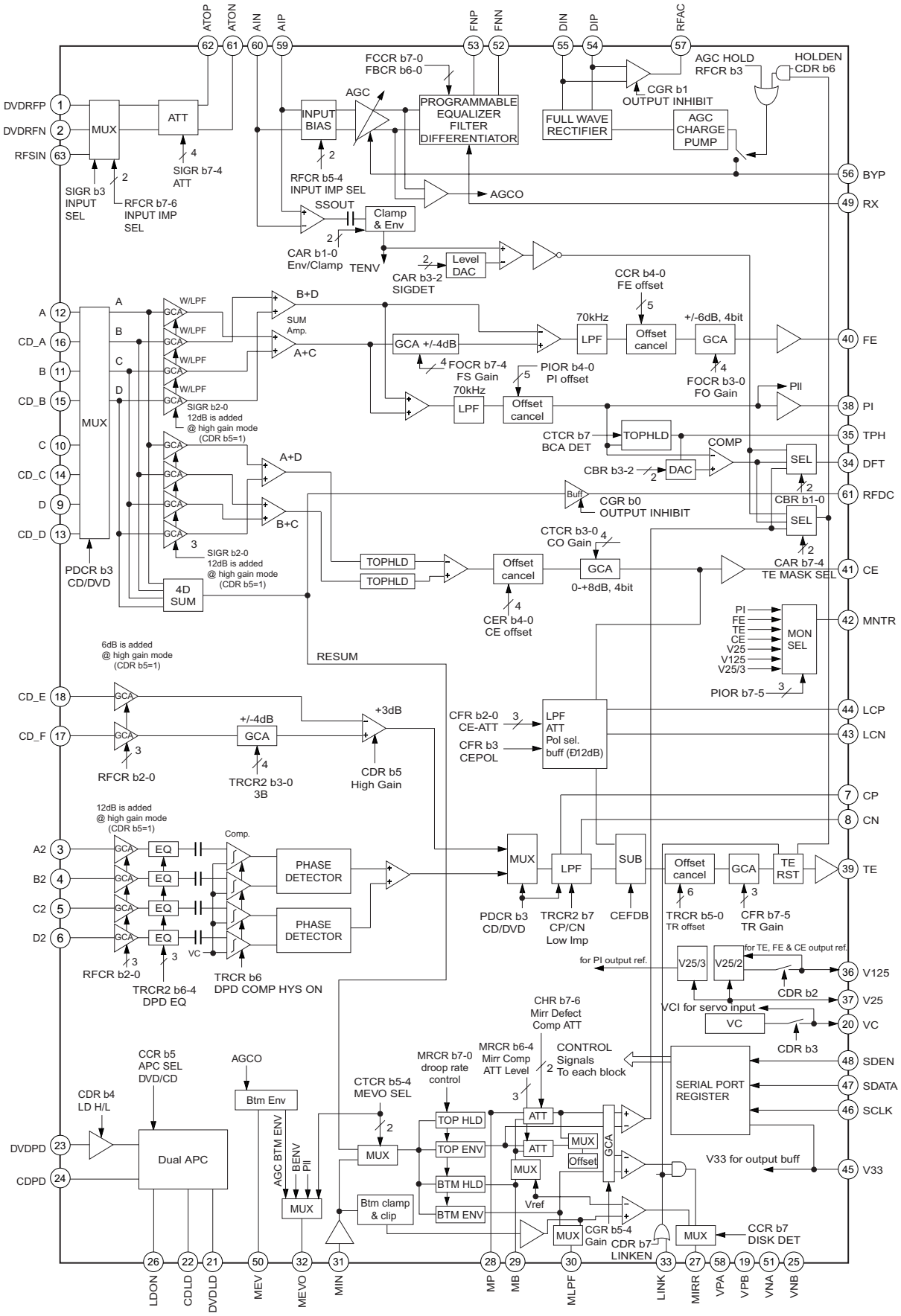

## Terminal Function

### Power Supply Pins

| Name | I/O | Function |
|---|---|---|
| VPA | - | Power for RF and serial port |
| VPB | - | Power for servo |
| VNA | - | GND for RF and serial port |
| VNB | - | GND for servo |
| V33 | - | Power for output buffer |
| V25 | - | Reference Power for servo output |

### Input Pins

| Name | I/O | Function |
|---|---|---|
| DVDRFP,DVDRFN | I | RF signal input |
| RFSIN | I | RF signal input |
| AIP,AIN | I | AGC amp. input |
| DIP,DIN | I | Analog input for RF single buffer |
| A,B,C,D | I | Photo detector interface input |
| A2,B2,C2,D2 | I | Photo detector interface input |
| CD_A,B,C,D | I | CD photo detector interface input |
| CD_E,F | I | CD photo detector interface input |
| MIN | I | RF signal input for mirror |
| DVDPD | I | APC input |
| CDPD | I | APC input |
| LDON | I | APC input ON/OFF (L:Open) |
| LINK | I | Link signal input (L:Open) |
| | O | Mirror monitor output |

### Output Pins

| Name | I/O | Function |
|---|---|---|
| ATOP,ATON | O | Differential attenuator output |
| FNP,FNN | O | Differential normal output |
| RFAC | O | Single end normal output |
| RFDC | O | RF signal output |
| FE | O | Focus error signal output |
| TE | O | Tracking error signal output |
| CE | O | Center error signal output |
| MEVO | O | RFDDC bottom envelope output |
| DFT | O | Defect output |
| MIRR | O | Mirror detected output |
| PI | O | Pull-in signal output |
| DVDLD | O | APC output |
| CDLD | O | APC output |
| MNTR | O | Monitor output |

### Analog Pins

| Name | I/O | Function |
|---|---|---|
| BYP | - | RF AGC integration capacitor connecting terminal |
| CP | - | Differential phase tracking LPF terminal |
| CN | - | Differential phase tracking LPF terminal |
| LCP | - | Lens shift offset cancel LPF terminal |
| LCN | - | Lens shift offset cancel LPF terminal |
| MP | - | MIRR top hold terminal |
| MB | - | MIRR bottom hold terminal |
| MEV | - | RFDC bottom envelope terminal |
| MLPF | - | Mirror LPF terminal |
| TPH | - | PI top hold terminal |
| VC | - | Reference voltage output |
| V125 | - | Reference voltage output |
| RX | - | Reference resistor input |

### Serial Port Pins

| Name | I/O | Function |
|---|---|---|
| SDEN | I | Serial data enable |
| SDATA | I/O | Serial data |
| SCLK | I | Serial clock |

**W986416DH (MA: IC104)**

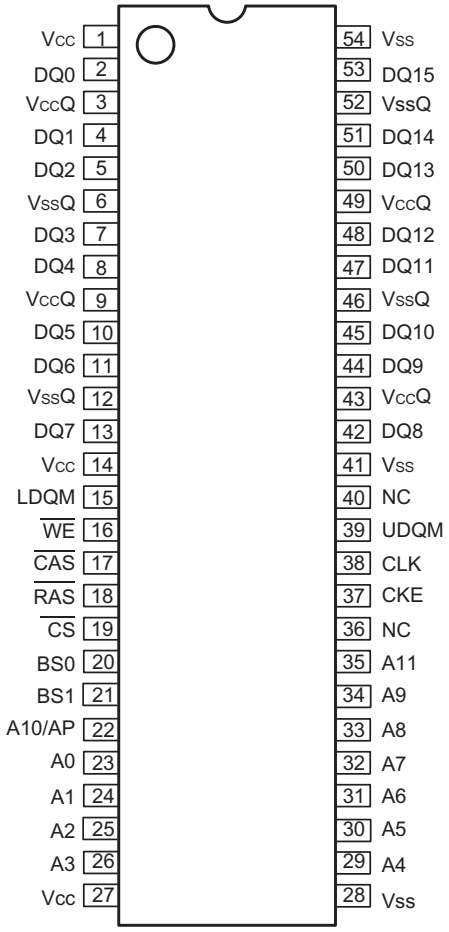


W986416DH Terminal Function

| Pin No. | Pin Name | Function | Description |
|---|---|---|---|
| 1, 14, 27 | Vcc | Power (+3.3V) | Power for input buffers and logic circuit inside DRAM. |
| 2, 4, 5, 7, 8, 10, 11, 13, 42, 44, 45, 47, 48, 50, 51, 53 | DQ0-DQ15 | Data Input/Output | Multiplexed pins for data output and input. |
| 3, 9, 43, 49 | VccQ | Power (+3.3V) for I/O buffer | Separated power from VCC, to improve DQ noise immunity. |
| 6, 12, 46, 52 | VssQ | Ground for I/O buffer | Separated ground from VSS, to improve DQ noise immunity. |
| 16 | $\overline{WE}$ | Write Enable | Referred to $\overline{RAS}$. |
| 17 | $\overline{CAS}$ | Column Address Strobe | Referred to $\overline{RAS}$. |
| 18 | $\overline{RAS}$ | Row Address Strobe | Command input. When sampled at the rising edge of the clock $\overline{RAS}$, $\overline{CAS}$ and $\overline{WE}$ define the operation to be executed. |
| 19 | $\overline{CS}$ | Chip Select | Disable or enable the command decoder. When command decoder is disabled, new command is ignored and previous operation continues. |
| 20, 21 | BS0, BS1 | Bank Select | Select bank to activate during row address latch time, or bank to read/write during address latch time. |
| 23~26, 22 29~35 | A0-A11 | Address | Multiplexed pins for row and column address. Row address: A0-A11. Column address: A0-A7. A10 is sampled during a precharge command to determine if all banks are to be precharged or bank selected by BS0, BS1. |
| 28, 41, 54 | Vss | Ground | Ground for input buffers and logic circuit inside DRAM. |
| 36, 40 | NC | No Connection | No Connection |
| 37 | CKE | Clock Enable | CKE controls the clock activation and deactivation. When CKE is low, Power Down mode, Suspend mode, or Self Refresh mode is entered. |
| 38 | CLK | Clock Inputs | System clock used to sample inputs on the rising edge of clock. |
| 39, 15 | UDQM, LDQM | Input/Output mask | The output buffer is placed at Hi-Z (with latency of 2) when DQM is sampled high in read cycle. In write cycle, sampling DQM high will block the write operation with zero latency. |

## 16MSDRAM (TOSP)-8 (MA: IC402)

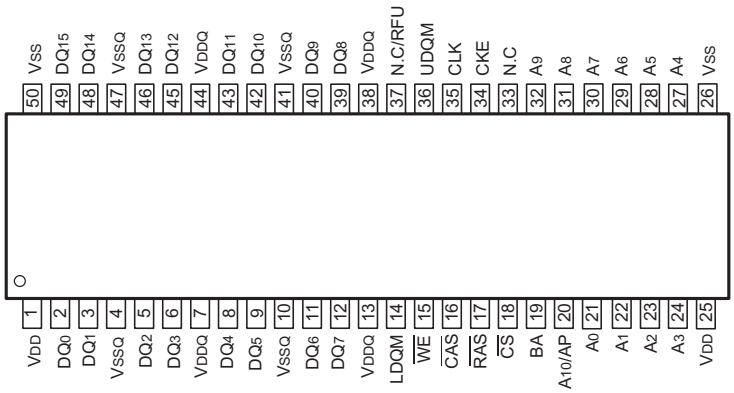


Terminal Function

| Pin No. | Pin Name | Symbol | Function |
|---|---|---|---|
| 1 | $V_{DD}$ | Power Supply/Ground | Power and ground for the input buffer and the core logic |
| 2 | $DQ_0$ | Data Input/Output | Data input/output are mutiplexed on the same pin |
| 3 | $DQ_1$ | Data Input/Output | Data input/output are mutiplexed on the same pin |
| 4 | $V_{SSQ}$ | Data Output Power/Ground | Isolated power supply and ground for the output buffer |
| 5 | $DQ_2$ | Data Input/Output | Data input/output are mutiplexed on the same pin |
| 6 | $DQ_3$ | Data Input/Output | Data input/output are mutiplexed on the same pin |
| 7 | $V_{DDQ}$ | Data Output Power/Ground | Isolated power supply and ground for the output buffer |
| 8 | $DQ_4$ | Data Input/Output | Data input/output are mutiplexed on the same pin |
| 9 | $DQ_5$ | Data Input/Output | Data input/output are mutiplexed on the same pin |
| 10 | $V_{SSQ}$ | Data Output Power/Ground | Isolated power supply and ground for the output buffer |
| 11 | $DQ_6$ | Data Input/Output | Data input/output are multiplexed on the same pin |
| 12 | $DQ_7$ | Data Input/Output | Data input/output are multiplexed on the same pin |
| 13 | $V_{DDQ}$ | Data Output Power/Ground | Isolated power supply and ground for the output buffer |
| 14 | L DQM | Data Input/Output Mask | Blocks data input when active |
| 15 | $\overline{WE}$ | Write Enable | Enables write operation and row precharge |
| 16 | $\overline{CAS}$ | Column Address Strobe | Latches column address on the positive going edge of the CLK at low |
| 17 | $\overline{RAS}$ | Row Address Strobe | Latches row address on the positive going edge of the CLK at low |
| 18 | $\overline{CS}$ | Chip Select | Disables or enables device operation by masking or enabling all inputs except CLK, CKE, and LDQM |
| 19 | BA | Bank Select Address | Selects bank to be activated during row address latch time |
| 20 | $A_{10}$/AP | Address | Row/column addresses are multiplexed on the same pin |
| 21 | $A_0$ | Address | Row/column addresses are multiplexed on the same pin |
| 22 | $A_1$ | Address | Row/column addresses are multiplexed on the same pin |
| 23 | $A_2$ | Address | Row/column addresses are multiplexed on the same pin |
| 24 | $A_3$ | Address | Row/column addresses are multiplexed on the same pin |
| 25 | $V_{DD}$ | Power Supply/Ground | Power and ground for the input buffer and the core logic |
| 26 | $V_{SS}$ | Power Supply/Ground | Power and ground for the input buffer and the core logic |
| 27 | $A_4$ | Address | Row/column addresses are multiplexed on the same pin |
| 28 | $A_5$ | Address | Row/column addresses are multiplexed on the same pin |
| 29 | $A_6$ | Address | Row/column addresses are multiplexed on the same pin |
| 30 | $A_7$ | Address | Row/column addresses are multiplexed on the same pin |
| 31 | $A_8$ | Address | Row/column addresses are multiplexed on the same pin |
| 32 | $A_9$ | Address | Row/column addresses are multiplexed on the same pin |
| 33 | N. C | No Connection | No connect pin |
| 34 | CKE | Clock Enable | Masks system clock to freeze operation from the next clock cycle |
| 35 | CLK | System Clock | Active on the positive going edge to sample all inputs |
| 36 | U DQM | Data Input/Output Mask | Blocks data input when active |
| 37 | N. C/RFU | NC/Reserved | No connect pin |
| 38 | $V_{DDQ}$ | Data Output Power/Ground | Isolated power supply and ground for the output buffer |
| 39 | $DQ_8$ | Data Input/Output | Data input/output are multiplexed on the same pin |
| 40 | $DQ_9$ | Data Input/Output | Data input/output are multiplexed on the same pin |
| 41 | $V_{SSQ}$ | Data Output Power/Ground | Isolated power supply and ground for the output buffer |
| 42 | $DQ_{10}$ | Data Input/Output | Data input/output are multiplexed on the same pin |
| 43 | $DQ_{11}$ | Data Input/Output | Data input/output are multiplexed on the same pin |
| 44 | $V_{DDQ}$ | Data Output Power/Ground | Isolated power supply and ground for the output buffer |
| 45 | $DQ_{12}$ | Data Input/Output | Data input/output are multiplexed on the same pin |
| 46 | $DQ_{13}$ | Data Input/Output | Data input/output are multiplexed on the same pin |
| 47 | $V_{SSQ}$ | Data Output Power/Ground | Isolated power supply and ground for the output buffer |
| 48 | $DQ_{14}$ | Data Input/Output | Data input/output are multiplexed on the same pin |
| 49 | $DQ_{15}$ | Data Input/Output | Data input/output are multiplexed on the same pin |
| 50 | $V_{SS}$ | Power Supply/Ground | Power and ground for the input buffer and the core logic |

**FAN8042 (MA: IC508)**

**Pin Assignments**

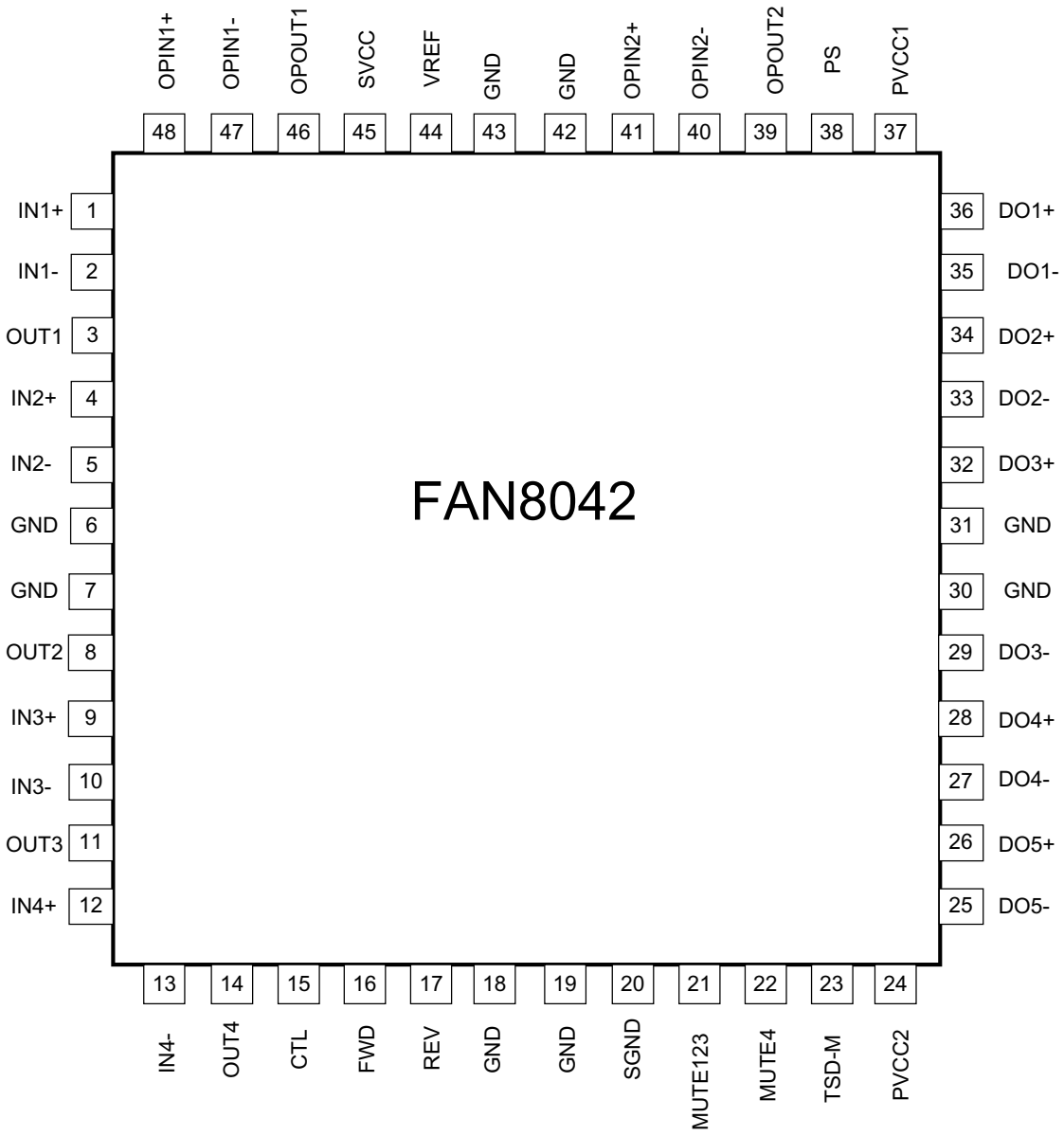

**Pin Definitions**

| Pin Number | Pin Name | I/O | Pin Function Description |
|---|---|---|---|
| 1 | IN1+ | I | CH1 op-amp input (+) |
| 2 | IN1- | I | CH1 op-amp input (-) |
| 3 | OUT1 | O | CH1 op-amp output |
| 4 | IN2+ | I | CH2 op-amp input (+) |
| 5 | IN2- | I | CH2 op-amp input (-) |
| 6 | GND | - | Ground |
| 7 | GND | - | Ground |
| 8 | OUT2 | O | CH2 op-amp output |
| 9 | IN3+ | I | CH3 op-amp input (+) |
| 10 | IN3- | I | CH3 op-amp input (-) |
| 11 | OUT3 | O | CH3 op-amp output |
| 12 | IN4+ | I | CH4 op-amp input (+) |
| 13 | IN4- | I | CH4 op-amp input (-) |
| 14 | OUT4 | O | CH4 op-amp output |
| 15 | CTL | I | CH5 motor speed control |
| 16 | FWD | I | CH5 forward input |
| 17 | REV | I | CH5 reverse input |
| 18 | GND | - | Ground |
| 19 | GND | - | Ground |
| 20 | SGND | - | Signal Ground |
| 21 | MUTE123 | I | Mute for CH1,2,3 |
| 22 | MUTE4 | I | Mute for CH4 |
| 23 | TSD-M | O | TSD monitor |
| 24 | PVCC2 | - | Power supply voltage 2 (For CH4,CH5) |
| 25 | DO5- | O | CH5 drive output (-) |
| 26 | DO5+ | O | CH5 drive output (+) |
| 27 | DO4- | O | CH4 drive output (-) |
| 28 | DO4+ | O | CH4 drive output (+) |
| 29 | DO3- | O | CH3 drive output (-) |
| 30 | GND | - | Ground |
| 31 | GND | - | Ground |
| 32 | DO3+ | O | CH3 drive output (+) |
| 33 | DO2- | O | CH2 drive output (-) |
| 34 | DO2+ | O | CH2 drive output (+) |
| 35 | DO1- | O | CH1 drive output (-) |
| 36 | DO1+ | O | CH1 drive output (+) |
| 37 | PVCC1 | - | Power supply voltage 1 (FOR CH1 CH2,CH3) |
| 38 | PS | I | Power save |
| 39 | OPOUT2 | O | Normal op-amp2 output |
| 40 | OPIN2- | I | Normal op-amp2 input (-) |
| 41 | OPIN2+ | I | Normal op-amp2 input (+) |
| 42 | GND | - | Ground |
| 43 | GND | - | Ground |
| 44 | VREF | I | Bias voltage input |
| 45 | SVCC | - | Signal & OPAMPs supply voltage |
| 46 | OPOUT1 | O | Normal op-amp1 output |
| 47 | OPIN1- | I | Normal op-amp1 input (-) |
| 48 | OPIN1+ | I | Normal op-amp1 input (+) |

**Block Diagram**

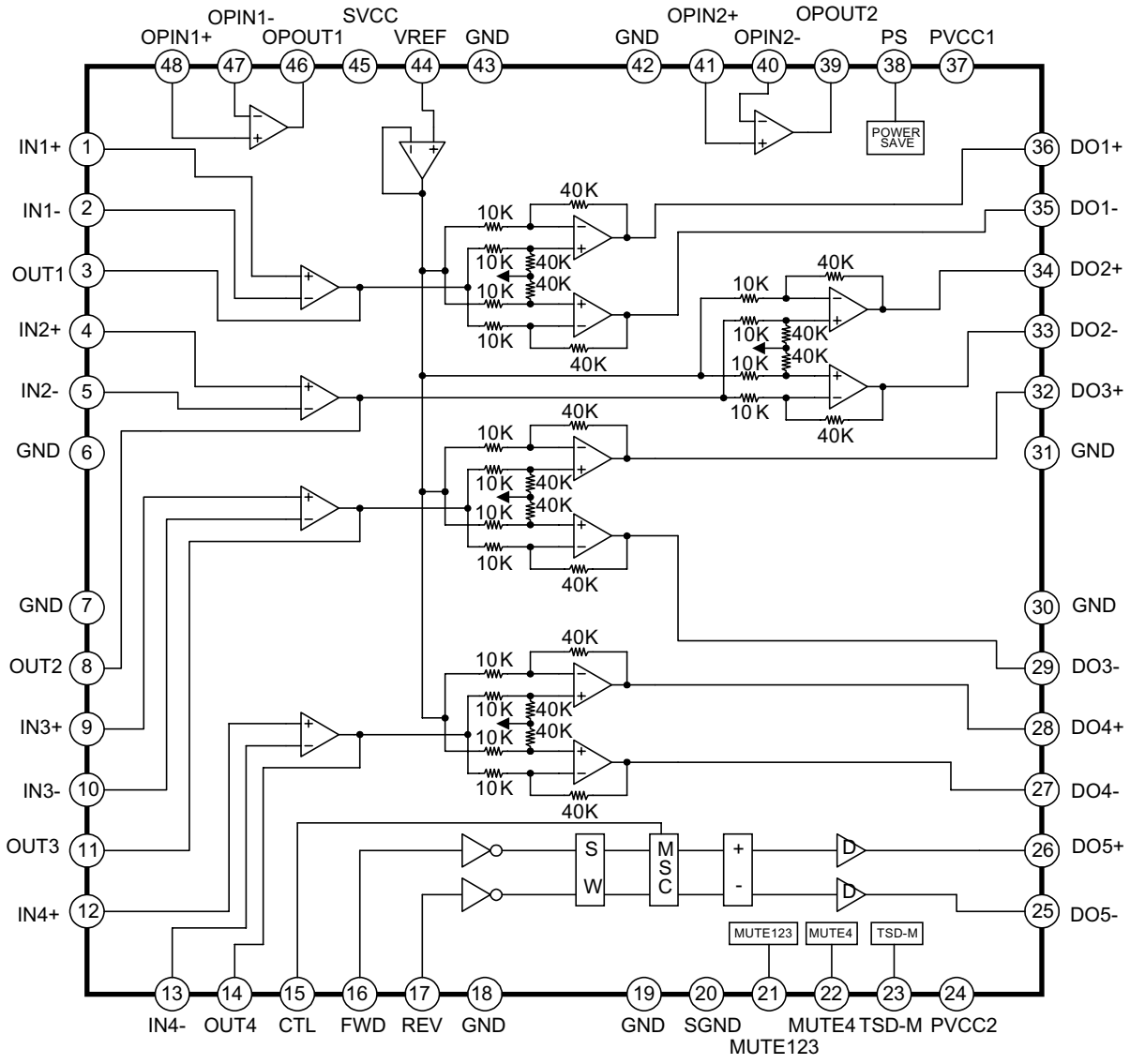


Note. Detailed circuit of the output power amp

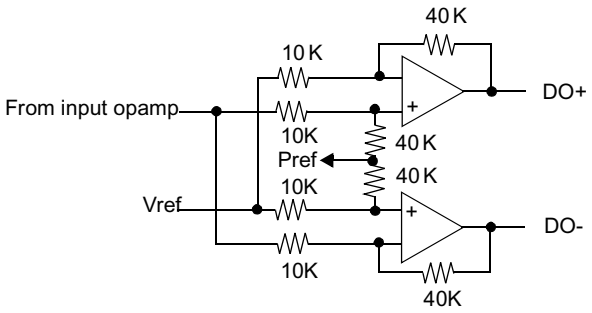


Pref1 is almost PVCC1 / 2
Pref2 is almost PVCC2 / 2

**MX29LV160BTC-90 (MA: IC103)**

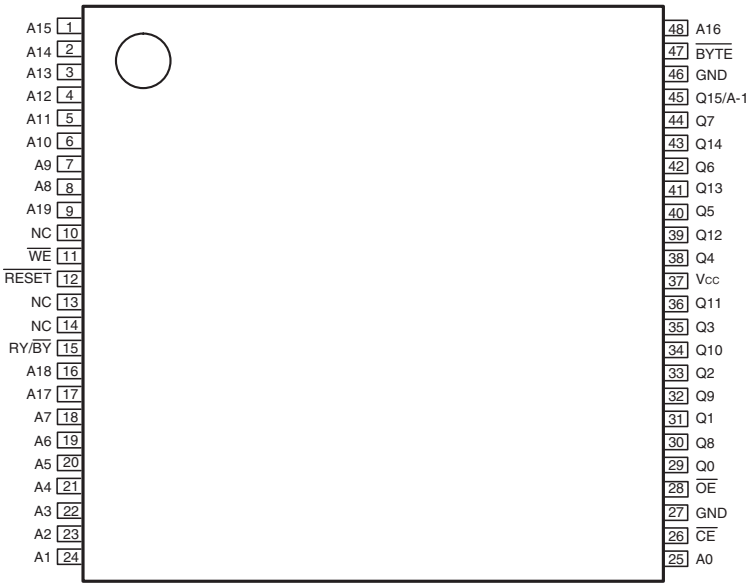


**Pin Description**

| Symbol | Pin Name |
|---|---|
| A0~A19 | Address Input |
| Q0~Q14 | Data Input/Output |
| Q15/A-1 | Q15 (Word mode)/LSB addr (Byte mode) |
| $\overline{CE}$ | Chip Enable Input |
| $\overline{WE}$ | Write Enable Input |
| $\overline{BYTE}$ | Word/Byte Selection input |
| $\overline{RESET}$ | Hardware Reset Pin/Sector Protect Unlock |
| $\overline{OE}$ | Output Enable Input |
| RY/$\overline{BY}$ | Ready/Busy Output |
| Vcc | Power Supply Pin (2.7V~3.6V) |
| GND | Ground Pin |

**AT49LV1025 (MA: IC302)**

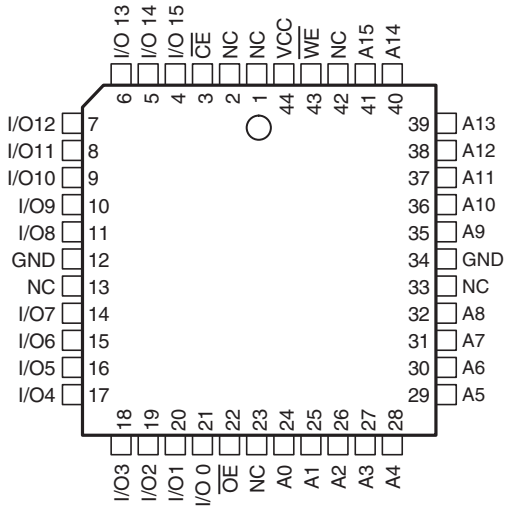


## Terminal Function

| Pin Name | Function |
|---|---|
| A0-A15 | Address Inputs |
| $\overline{CE}$ | Chip Enable |
| $\overline{OE}$ | Output Enable |
| $\overline{WE}$ | Write Enable |
| I/O0-I/O15 | Data Inputs/Outputs |
| NC | No Connection |

**M11L16161SA (MA: IC503)**

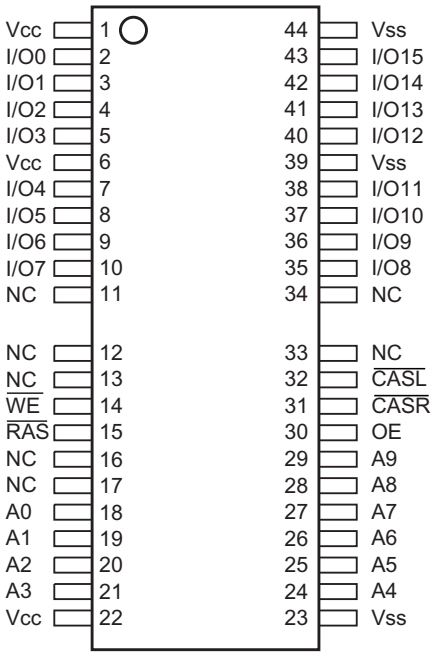


PIN DESCRIPTIONS

| PIN NO. (SOJ Package) | PIN NAME | TYPE | DESCRIPTION |
|---|---|---|---|
| 17~20,23~28 | A0~A9 | Input | Address Input<br>Row Address:A0~A9<br>Column Address:A0~A9 |
| 14 | $\overline{RAS}$ | Input | Row Address Strobe |
| 30 | $\overline{CASH}$ | Input | Column Address Strobe/Upper Byte Control |
| 31 | $\overline{CASL}$ | Input | Column Address Strobe/Lower Byte Control |
| 13 | $\overline{WE}$ | Input | Write Enable |
| 29 | $\overline{OE}$ | Input | Output Enable |
| 2~5,7~10, 33~36,38~41 | I/O0~I/O15 | Input/Output | Data Input/Output |
| 1,6,21 | Vcc | Supply | Power,(5V or 3.3V) |
| 22,37,42 | Vss | Ground | Ground |
| 11,12,15,16,32 | NC | - | No Connect |

## AN8471SA (MA: IC505)

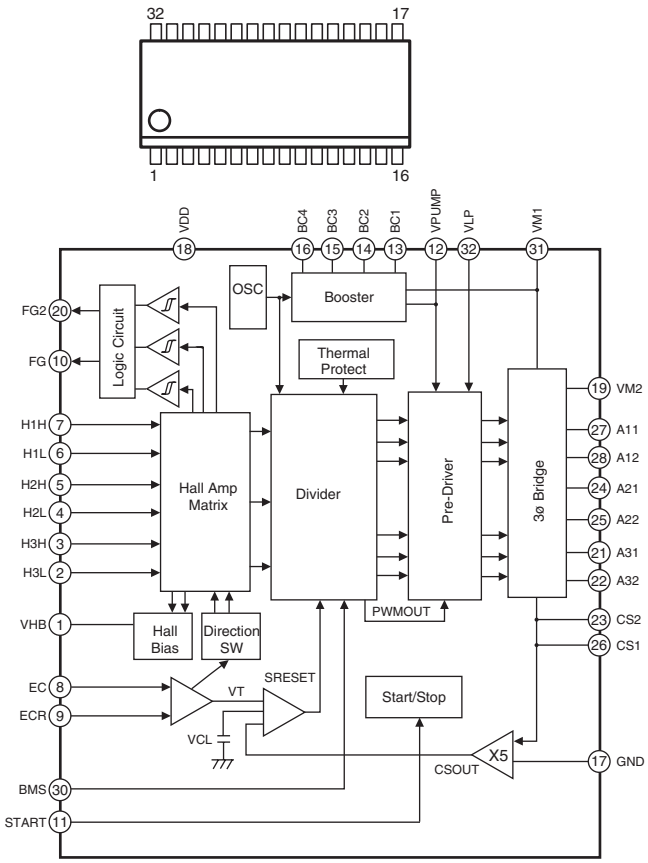


| Pin No. | Pin Name | Function |
|---|---|---|
| 1 | VHB | Hall bias pin |
| 2 | H3L | Hall element 3 input (-) |
| 3 | H3H | Hall element 3 input (+) |
| 4 | H2L | Hall element 2 input (-) |
| 5 | H2H | Hall element 2 input (+) |
| 6 | H1L | Hall element 1 input (-) |
| 7 | H1H | Hall element 1 input (+) |
| 8 | EC | Torque command input pin |
| 9 | ECR | Torque command ref. input pin |
| 10 | FG1 | FG signal lout put pin (0.C) |
| 11 | START | Start/Stop switching pin |
| 12 | VPUMP | Booster pin |
| 13 | BC1 | Booster cap. connecting pin 1 |
| 14 | BC2 | Torque command input pin 2 |
| 15 | BC3 | Torque command input pin 3 |
| 16 | BC4 | Torque command input pin 4 |
| 17 | GND | GND pin |
| 18 | $V_{DD}$ | Power pin |
| 19 | VM2 | Motor power pin 2 |
| 20 | FG2 | 3x FG signal output pin (0.C) |
| 21 | A31 | Drive output 3 |
| 22 | A32 | Drive output 3 |
| 23 | CS2 | Current detect pin 2 |
| 24 | A21 | Drive output 2 |
| 25 | A22 | Drive output 2 |
| 26 | CS1 | Current detect pin 1 |
| 27 | A11 | Drive output 1 |
| 28 | A12 | Drive output 1 |
| 29 | NC | N.C. |
| 30 | BMS | Brake mode switching pin |
| 31 | VM1 | Motor power pin 1 |
| 32 | VLP | Pre-driver lower power |

## DSD1790DBR (AU: IC206, 209, 212)

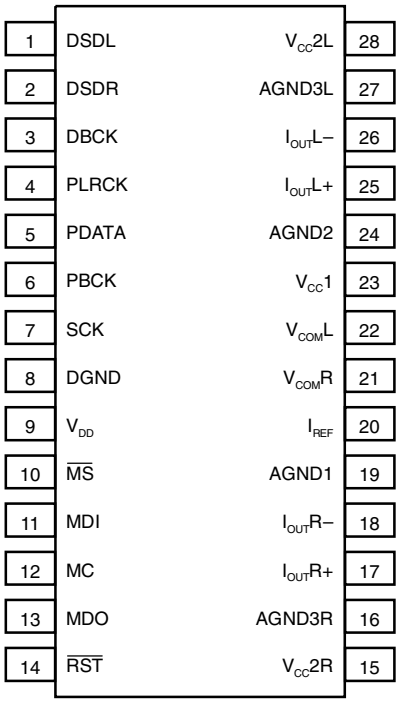


## Block Diagram

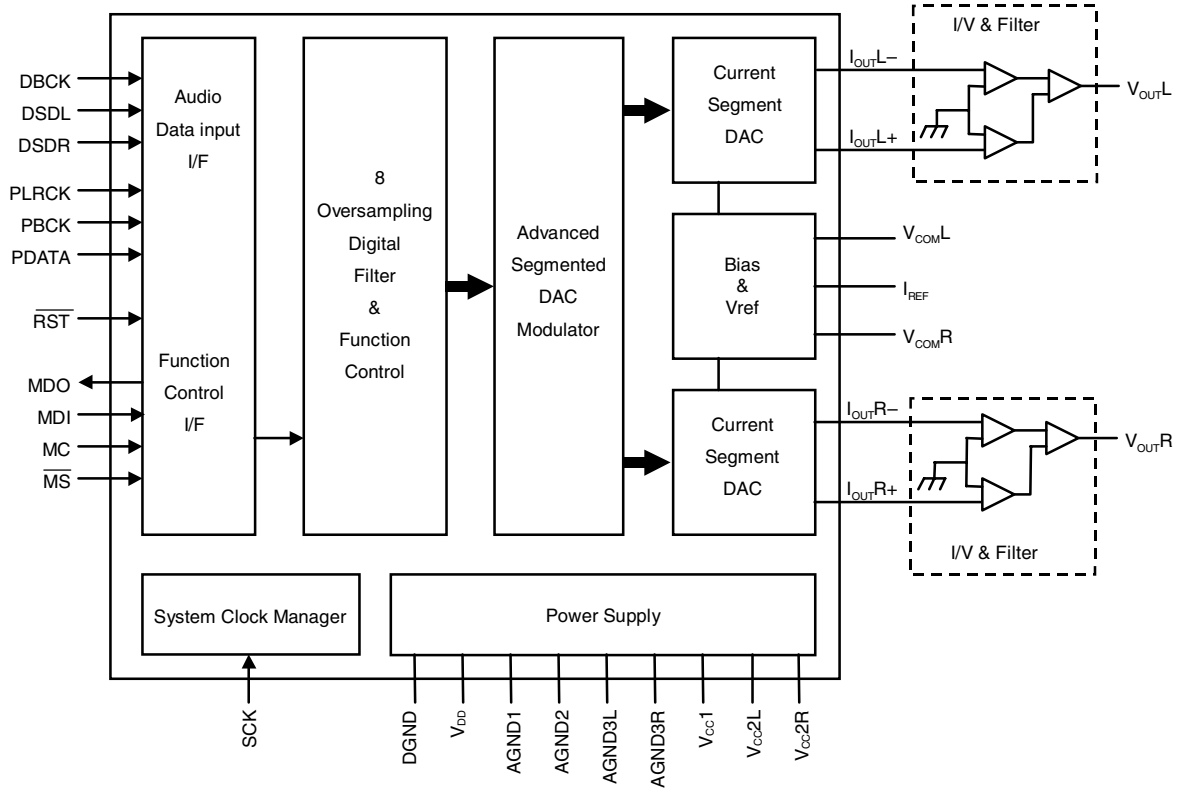

## Terminal Function

| TERMINAL NAME | TERMINAL PIN | I/O | DESCRIPTIONS |
|---|---|---|---|
| DSDL | 1 | I/O | L-channel audio data input for DSD and external DF modes‡<br>PCM mode zero flag for L-channel by ZERO output mode select |
| DSDR | 2 | I/O | R-channel audio data input for DSD and external DF modes‡<br>PCM mode zero flag for R-channel by ZERO output mode select |
| DBCK | 3 | I | Bit clock input for external DF and DSD modes† |
| PLRCK | 4 | I | Left and right clock ($f_S$) input for normal operation. WDCK clock input for external DF mode. Connected to GND for DSD mode† |
| PDATA | 5 | I | Serial audio data input for normal operation† |
| PBCK | 6 | I | Bit clock input. Connected GND for DSD mode† |
| SCK | 7 | I | System clock input† |
| DGND | 8 | - | Digital ground |
| $V_{DD}$ | 9 | - | Digital power supply, +3.3 V |
| $\overline{MS}$ | 10 | I/O | Chip select for mode control‡ |
| MDI | 11 | I | Mode control data input† |
| MC | 12 | I | Mode control clock input† |
| MDO | 13 | I/O | Mode control read back data output‡ |
| $\overline{RST}$ | 14 | I | Reset† |
| $V_{CC}2R$ | 15 | - | Analog power supply (R-channel DACFF), +5.0 V |
| AGND3R | 16 | - | Analog ground (R-channel DACFF) |
| $I_{OUT}R+$ | 17 | O | R-channel analog current output + |
| $I_{OUT}R–$ | 18 | O | R-channel analog current output – |
| AGND1 | 19 | - | Analog ground (internal bias) |
| $I_{REF}$ | 20 | - | Output current reference bias pin |
| $V_{COM}R$ | 21 | - | R-channel Internal bias de-coupling pin |
| $V_{COM}L$ | 22 | - | R-channel Internal bias de-coupling pin |
| $V_{CC}1$ | 23 | - | Analog power supply, +5.0 V |
| AGND2 | 24 | - | Analog ground (internal bias) |
| $I_{OUT}L+$ | 25 | O | L-channel analog current output + |
| $I_{OUT}L–$ | 26 | O | L-channel analog current output – |
| AGND3L | 27 | - | Analog ground (L-channel DACFF) |
| $V_{CC}2L$ | 28 | - | Analog power supply (L-channel DACFF), +5.0 V |

† Schmitt trigger input, 5 V tolerant.
‡ Schmitt trigger input and output, 3.3 V.

**PIC18LC242-I/SO (VI: IC703)**

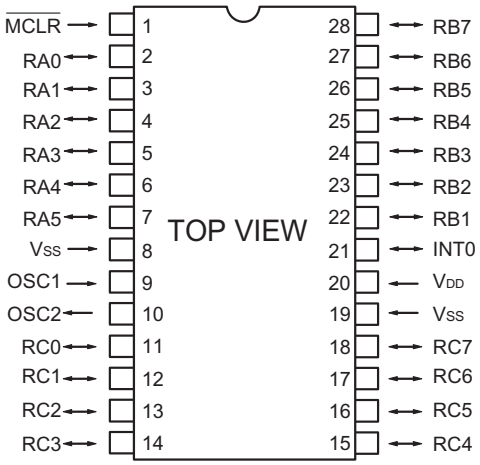


PIC18LC242-I/SO Terminal Function

| Pin No. | Pin Name | I/O | Description |
|---|---|---|---|
| 1 | $\overline{\text{MCLR}}$ | I | Master Clear (Reset) input. This pin is an active low RESET to the device. |
| 2 | RA0 | I/O | Digital I/O. |
| 3 | RA1 | I/O | Digital I/O. |
| 4 | RA2 | I/O | Digital I/O. |
| 5 | RA3 | I/O | Digital I/O. |
| 6 | RA4 | I/O | Digital I/O. Open drain when configured as output. |
| 7 | RA5 | I/O | Digital I/O. |
| 8 | VSS | P | Ground reference for logic and I/O pins. |
| 9 | OSC1 | I | Oscillator crystal input or external clock source input.<br>ST buffer when configured in RC mode. CMOS otherwise. |
| 10 | OSC2 | O | Oscillator crystal output. Connects to crystal or resonator in Crystal Oscillator mode. |
| 11 | RC0 | I/O | Digital I/O. |
| 12 | RC1 | I/O | Digital I/O. |
| 13 | RC2 | I/O | Digital I/O. |
| 14 | RC3 | I/O | Digital I/O. |
| 15 | RC4 | I/O | Digital I/O. |
| 16 | RC5 | I/O | Digital I/O. |
| 17 | RC6 | I/O | Digital I/O. |
| 18 | RC7 | I/O | Digital I/O. |
| 19 | VSS | P | Ground reference for logic and I/O pins. |
| 20 | VDD | P | Positive supply for logic and I/O pins. |
| 21 | INT0 | I | External Interrupt 0. |
| 22 | RB1 | I/O | Digital I/O. |
| 23 | RB2 | I/O | Digital I/O. |
| 24 | RB3 | I/O | Digital I/O. |
| 25 | RB4 | I/O | Digital I/O. Interrupt-on-change pin. |
| 26 | RB5 | I/O | Digital I/O. Interrupt-on-change pin. |
| 27 | RB6 | I/O | Digital I/O. Interrupt-on-change pin. ICSP programming clock. |
| 28 | RB7 | I/O | Digital I/O. Interrupt-on-change pin. ICSP programming data. |

Legend: O=Output
I=Input
P=Power

## BH7860FP (VI: IC706, 707)  IC707 for Europe model

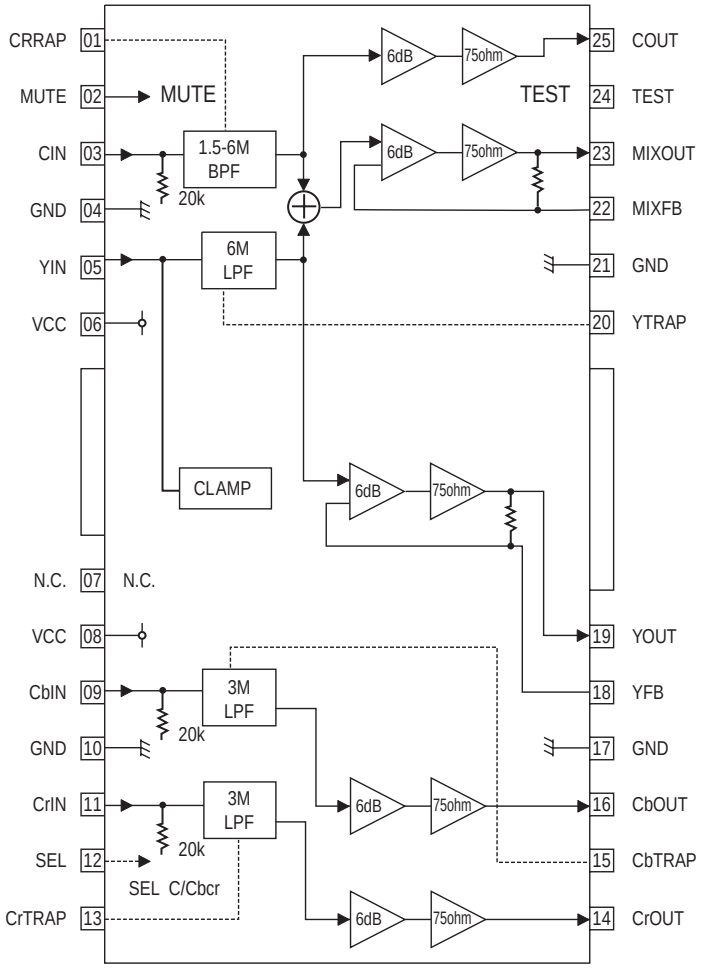


Functions

| Pin No. | Pin Name | Functions |
|---|---|---|
| 1,13,15,20 | CTRAP<br>CbTRAP<br>CrTRAP<br>YTRAP | LC oscilation terminal |
| 2 | MUTE | Mute control. If MUTE is set to “L”, five channels will be muted simultaneously. |
| 3,9,11 | CIN<br>CbIN<br>CrIN | Signal input.<br>Croma signal. Color difference signal. The bias type input terminal.<br>Input impedance: 20kohms. |
| 4,10,17,21 | GND | It fixed to ground. |
| 5 | YIN | Siganal input.<br>Input terminal of a luminance signal. Di clamp input . |
| 6,8 | VCC | VCC of 6 and 8 pins does not connected inside. Use it by connectin externally<br>C, MIX and Y connect with Vcc of 6 pin.  Cb and Cr connect with VCC of 8 pin. |
| 12 | SEL | C/CbCr select.<br>Cb and Cr are turned off if SEL is set to “L”. |
| 14,16 | CrOUT<br>CbOUT | Signal outout.<br>Color difference signal output. |
| 18,19 | YFB<br>YOUT | Signal outout.<br>Luminance signal output. |
| 22,23 | MIXFB<br>MIXOUT | Signal outout.<br>Y/C MIX signal output. |
| 24 | TEST | TEST terminal. Useally, please short-circuit with GND. |
| 25 | COUT | Signal output. Chroma output terminal. |

## SM8707EV (MA: IC105)

**Top View**

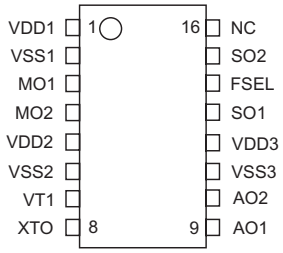


**Block Diagram**

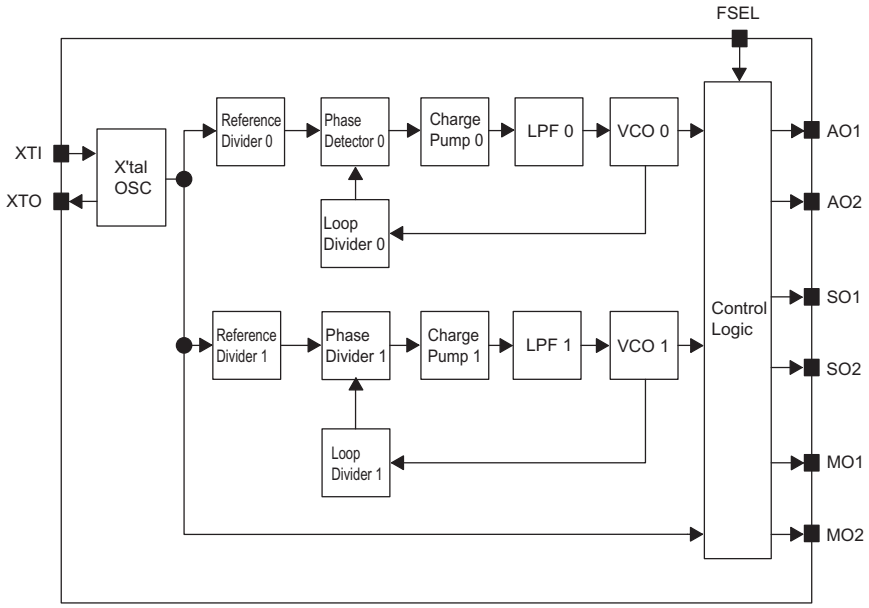


**Functions**

| Number | Name | I/O | Description |
|---|---|---|---|
| 1 | VDD1 | - | Supply 1 for digital block |
| 2 | VSS1 | - | Ground 1 for digital block |
| 3 | MO1 | O | Video system output 1 (27MHz fixed) |
| 4 | MO2 | O | Video system output 2 (27MHz fixed) |
| 5 | VDD2 | - | Supply 2 for analog block |
| 6 | VSS2 | - | Ground 2 for analog block |
| 7 | XTI | I | Crystal oscillator connection or external clock input |
| 8 | XTO | O | Crystal oscillator connection |
| 9 | AO1 | O | <SM8707D> Audio system output 1 (384fs/768fs output)<br>FSEL = LOW, fs = 48kHz: 768fs<br>FSEL = HIGH, fs = 44.1kHz: 384fs<br><SM8707E> Audio system output 1 (512fs output) |
| 10 | AO2 | O | Audio system output 1 (512fs output) |
| 11 | VSS3 | - | Ground 3 for digital block |
| 12 | VDD3 | - | Supply 1 for digital block |
| 13 | SO1 | O | <SM8707D> Signal processor system output 1 (16.9344MHz fixed)<br><SM8707E> Signal processor system output 1 (33.8688MHz fixed) |
| 14 | FSEL | I | <SM8707D> Sampling frequency select<br>FSEL = LOW : fs = 48kHz<br>FSEL = HIGH : fs = 44.1kHz<br>(with internal pull-up resistor, Schmitt-trigger input)<br><SM8707E> Sampling frequency select<br>FSEL = LOW : fs = 48kHz<br>FSEL = HIGH : fs = 44.1kHz<br>(with internal pull-up resistor, Schmitt-trigger input) |
| 15 | SO2 | O | Signal processor system output 2 (33.8688MHz fixed) |
| 16 | NC | - | No connection (leave pin open circuit or connect to VDD) |

**µPD4721GS (PD: IC511)**

**Top View**

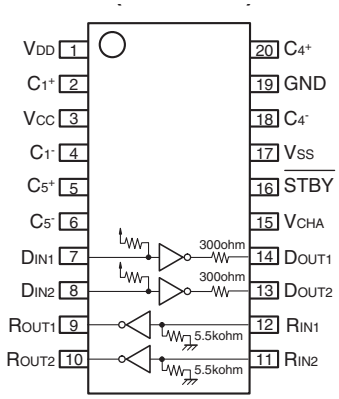


**STR-F6674 (PD: IC901)**

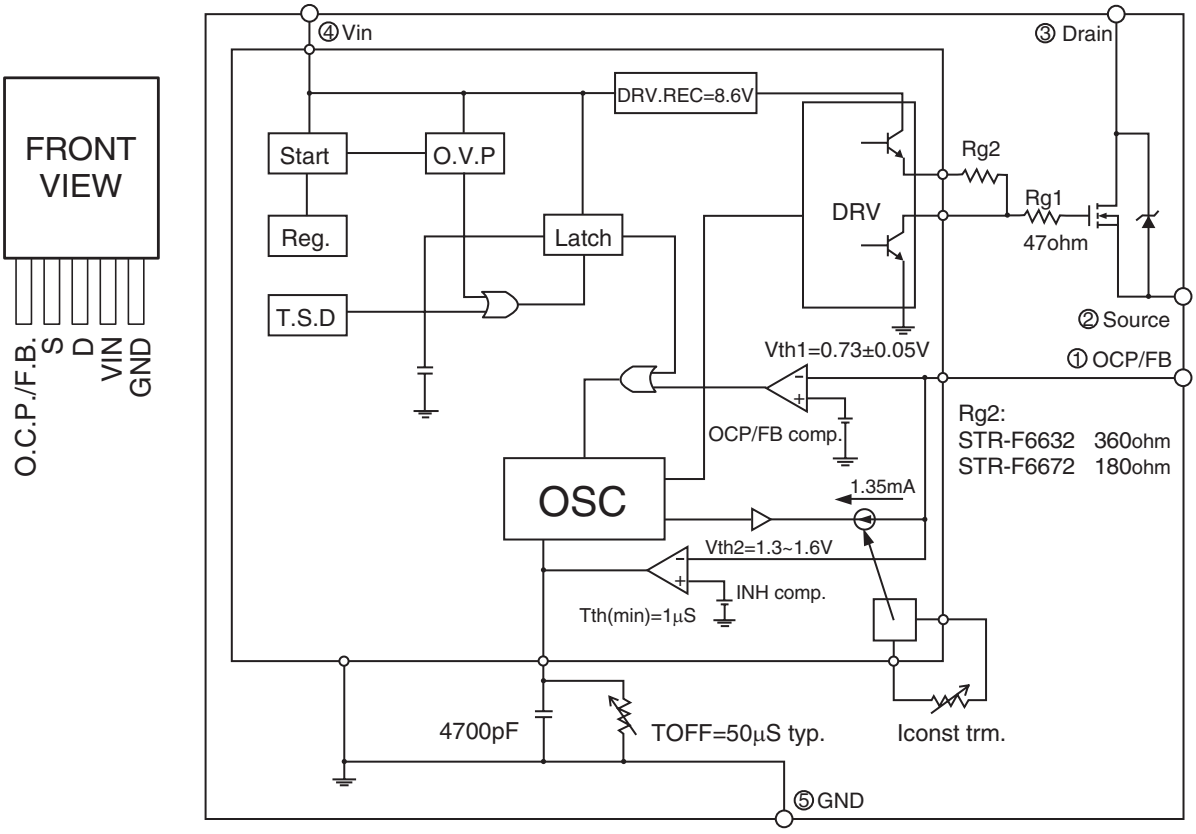


**PC123 (PD: IC902)**

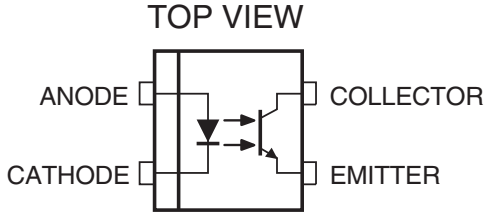

## 2. TRANSISTORS

**DTA114EK**
**DTA124EK**
**DTC114EK**

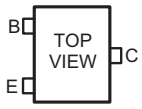


DTA114EK
DTA124EK

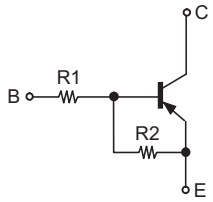


| | R1 | R2 |
|---|---|---|
| DTA114EK | 10kohm | 10kohm |
| DTA124EK | 22kohm | 22kohm |

DTC114EK

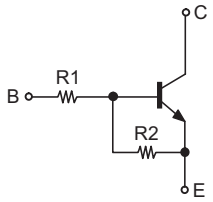


| | R1 | R2 |
|---|---|---|
| DTC114EK | 10kohm | 10kohm |

**HAT2053M**

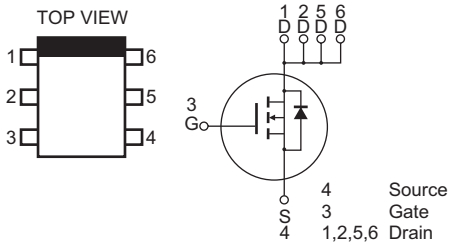


**IMD3A**

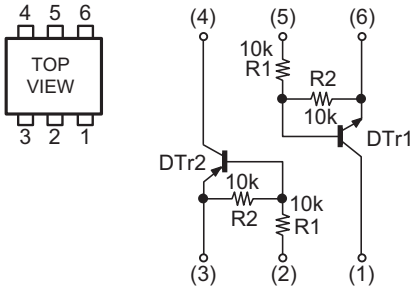


## 3. DIODE

**FMB-2204**

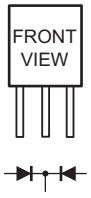

## 4. FL DISPLAY 17-ST-04GNK (FL101)

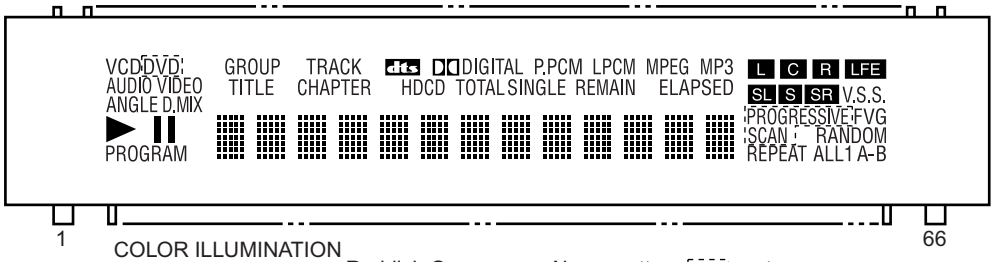


Reddish Orange ----- Above pattern [ ] part
Green ---------- Other

### PIN CONNECTION

| PIN NO. | 1 | 2 | 3 | 4 | 5 | 6 | 7 | 8 | 9 | 10 | 11 | 12 | 13 | 14 | 15 | 16 | 17 | 18 | 19 | 20 | 21 | 22 | 23 | 24 | 25 | 26 | 27 | 28 | 29 | 30 | 31 | 32 | 33 | 34 | 35 | 36 | 37 | 38 | 39 | 40 | 41 | 42 | 43 | 44 | 45 | 46 | 47 | 48 | 49 | 50 |
|---|---|---|---|---|---|---|---|---|---|---|---|---|---|---|---|---|---|---|---|---|---|---|---|---|---|---|---|---|---|---|---|---|---|---|---|---|---|---|---|---|---|---|---|---|---|---|---|---|---|---|
| CONNECTION | F- | NX | NP | NP | P1 | P2 | P3 | P4 | P5 | P6 | P7 | P8 | P9 | P10 | P11 | P12 | P13 | P14 | P15 | P16 | P17 | P18 | P19 | P20 | P21 | P22 | P23 | P24 | P25 | P26 | P27 | P28 | P29 | P30 | P31 | P32 | P33 | P34 | P35 | NC | NC | NC | NC | NC | NC | 17G | 16G | 15G | 14G | 13G | 13G |

| PIN NO. | 51 | 52 | 53 | 54 | 55 | 56 | 57 | 58 | 59 | 60 | 61 | 62 | 63 | 64 | 65 | 66 |
|---|---|---|---|---|---|---|---|---|---|---|---|---|---|---|---|---|
| CONNECTION | 12G | 11G | 10G | 9G | 8G | 7G | 6G | 5G | 4G | 3G | 2G | 1G | NP | NP | NX | F+ |

NOTE 1) F-,F+ ---------- Filament
2) NP ---------- No pin
3) NX ---------- No extend pin
4) DL ---------- Datum line
5) 1G~17G ----- Grid
6) Visual Field -- Upper 22.6 min.
7) NC ---------- No connection
(NC pin should be electorically open on the PC board)

### GRID ASSIGNMENT

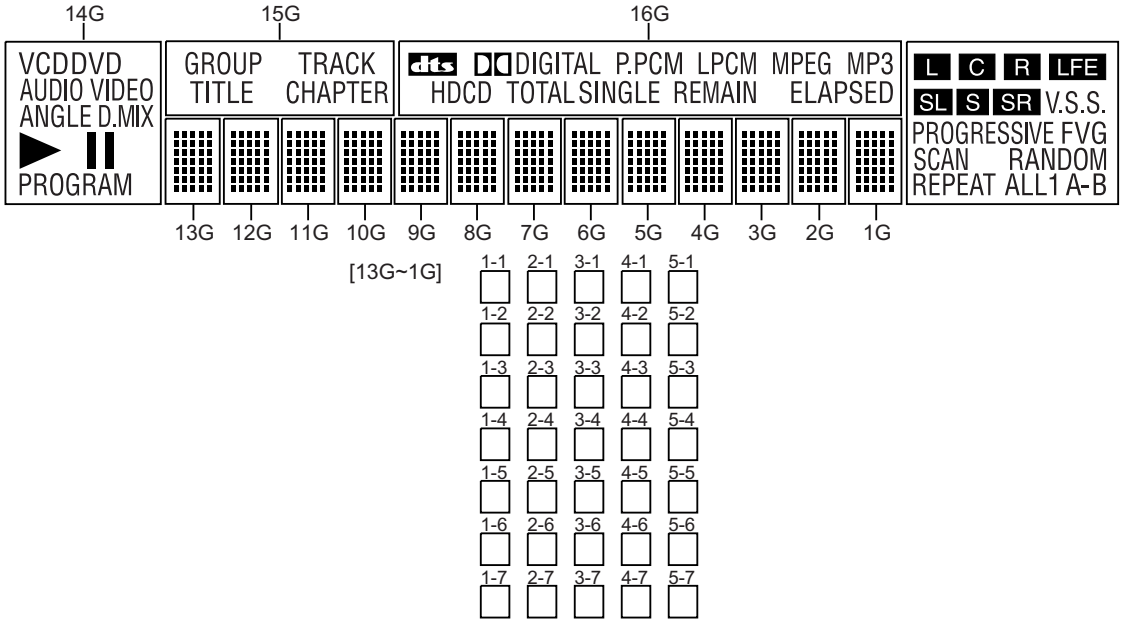


### ANODE CONNECTION

| | 17G | 16G | 15G | 14G | 13G~1G | | 17G | 16G | 15G | 14G | 13G~1G |
|---|---|---|---|---|---|---|---|---|---|---|---|
| P1 | SL | REMAIN | TITLE | PROGRAM | 1-1 | P19 | G | — | — | — | 4-4 |
| P2 | S | ELAPSED | CHAPTER | V | 2-1 | P20 | — | — | — | — | 5-4 |
| P3 | SR | SINGLE | TRACK | CD | 3-1 | P21 | — | — | — | — | 1-5 |
| P4 | L | HDCD | GROUP | DVD | 4-1 | P22 | — | — | — | — | 2-5 |
| P5 | C | TOTAL | — | AUDIO | 5-1 | P23 | — | — | — | — | 3-5 |
| P6 | R | dts | — | VIDEO | 1-2 | P24 | — | — | — | — | 4-5 |
| P7 | LFE | MP3 | — | ANGLE | 2-2 | P25 | — | — | — | — | 5-5 |
| P8 | PROGRESSIVE SCAN | MPEG | — | ▶ | 3-2 | P26 | — | — | — | — | 1-6 |
| | | | | | | P27 | — | — | — | — | 2-6 |
| P9 | V.S.S. | LPCM | — | ❚❚ | 4-2 | P28 | — | — | — | — | 3-6 |
| P10 | REPEAT | P.PCM | — | D.MIX | 5-2 | P29 | — | — | — | — | 4-6 |
| P11 | ALL | DIGITAL | — | — | 1-3 | P30 | — | — | — | — | 5-6 |
| P12 | 1 | — | — | — | 2-3 | P31 | — | — | — | — | 1-7 |
| P13 | A- | — | — | — | 3-3 | P32 | — | — | — | — | 2-7 |
| P14 | B | — | — | — | 4-3 | P33 | — | — | — | — | 3-7 |
| P15 | RANDOM | — | — | — | 5-3 | P34 | — | — | — | — | 4-7 |
| P16 | — | — | — | — | 1-4 | P35 | — | — | — | — | 5-7 |
| P17 | F | — | — | — | 2-4 | | | | | | |
| P18 | V | — | — | — | 3-4 | | | | | | |

# PRINTED WIRING BOARD

## GU-3494 MAIN P.W.B. UNIT

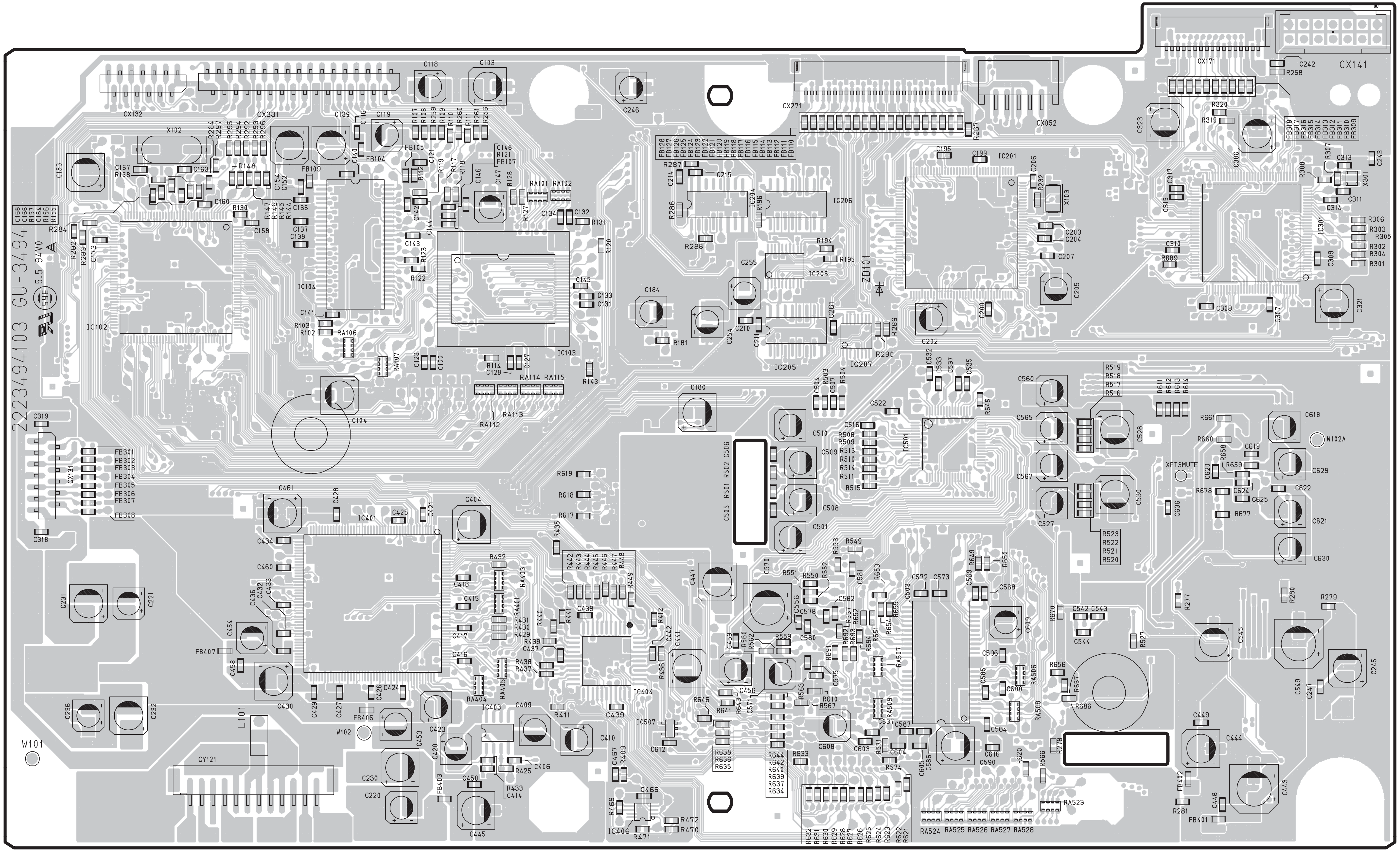


COMPONENT SIDE

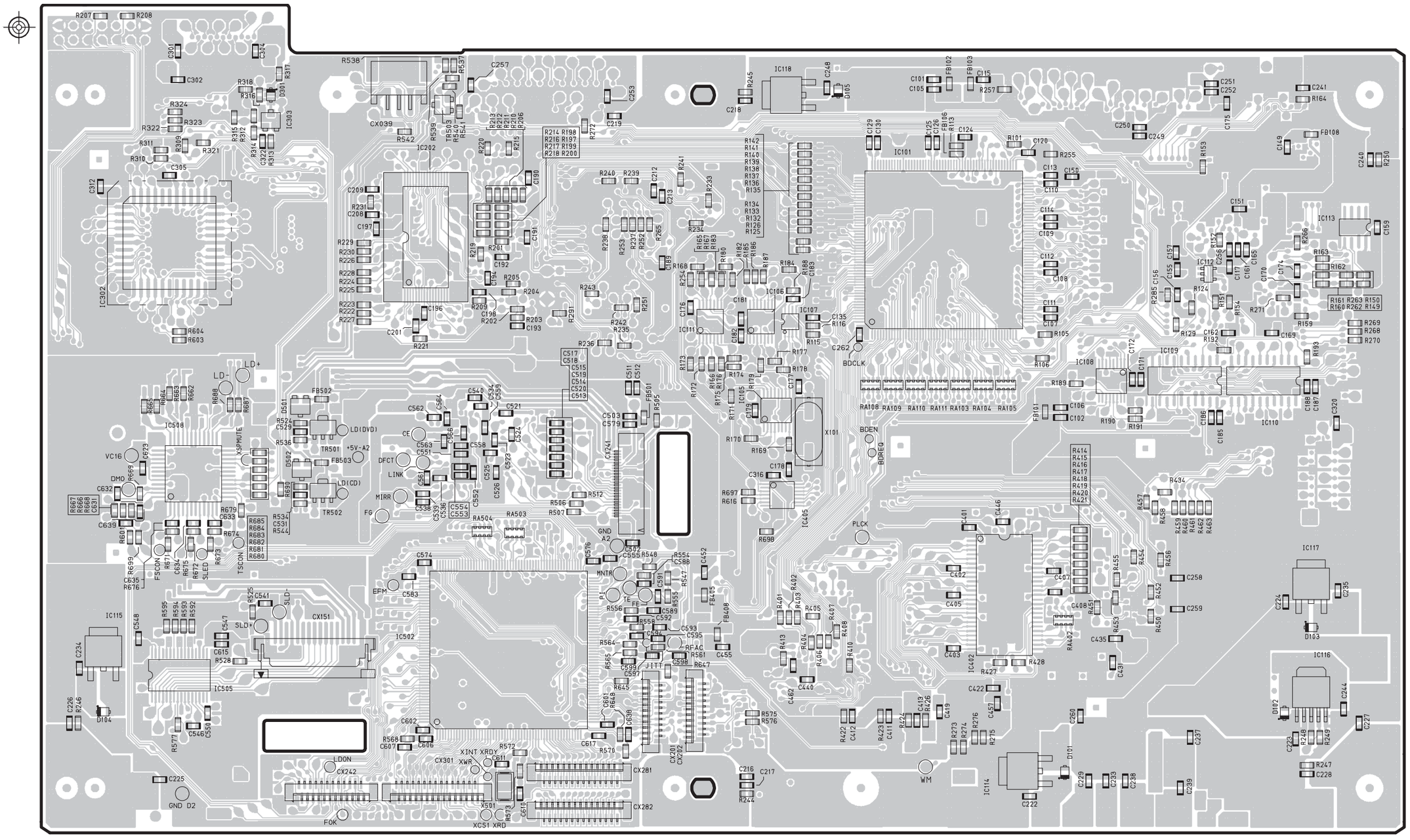
IC302
IC508
IC505
IC502
IC115
IC101
IC118
IC202
IC111
IC107
IC106
IC108
IC109
IC110
IC113
IC116
IC117
IC114
IC402
IC405
X101
CX039
CX241
CX242
CX281
CX282
CX301
CX201
CX202
CX151
TR501
TR502
LD+
LD-
LD(DVD)
LD(CD)
XSPMUTE
DMO
VC16
FSCON
TSCON
SLED
SLD
EFM
FOK
MNTR
LINK
DFCT
MIRR
FG
CE
XWR
XINT XRDY
XCS1 XRD
LDON
BDCLK
BDEN
BDREQ
PLCK
WM
RFAC
JITT
GND D2
GND A2

FOIL SIDE

## GU-3495 AUDIO P.W.B. UNIT

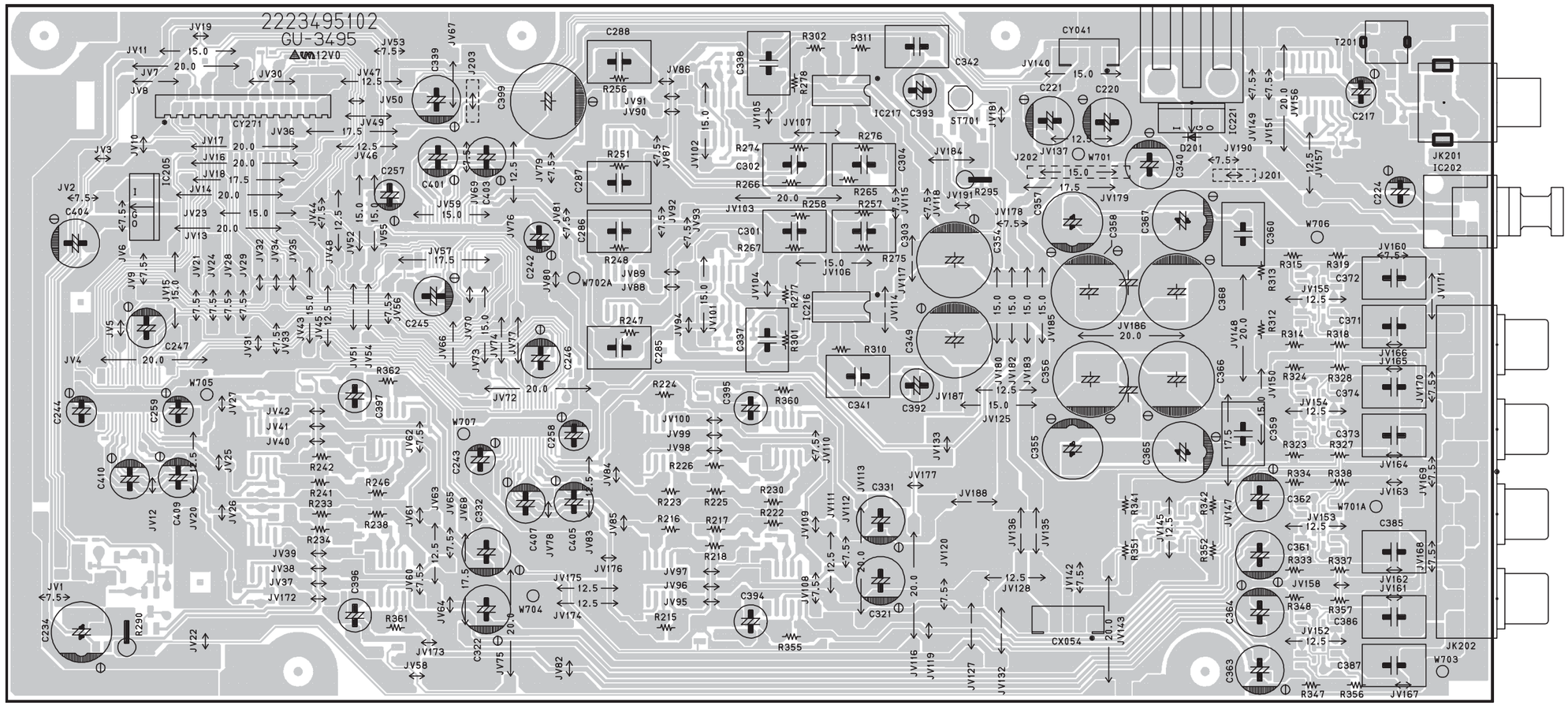


COMPONENT SIDE

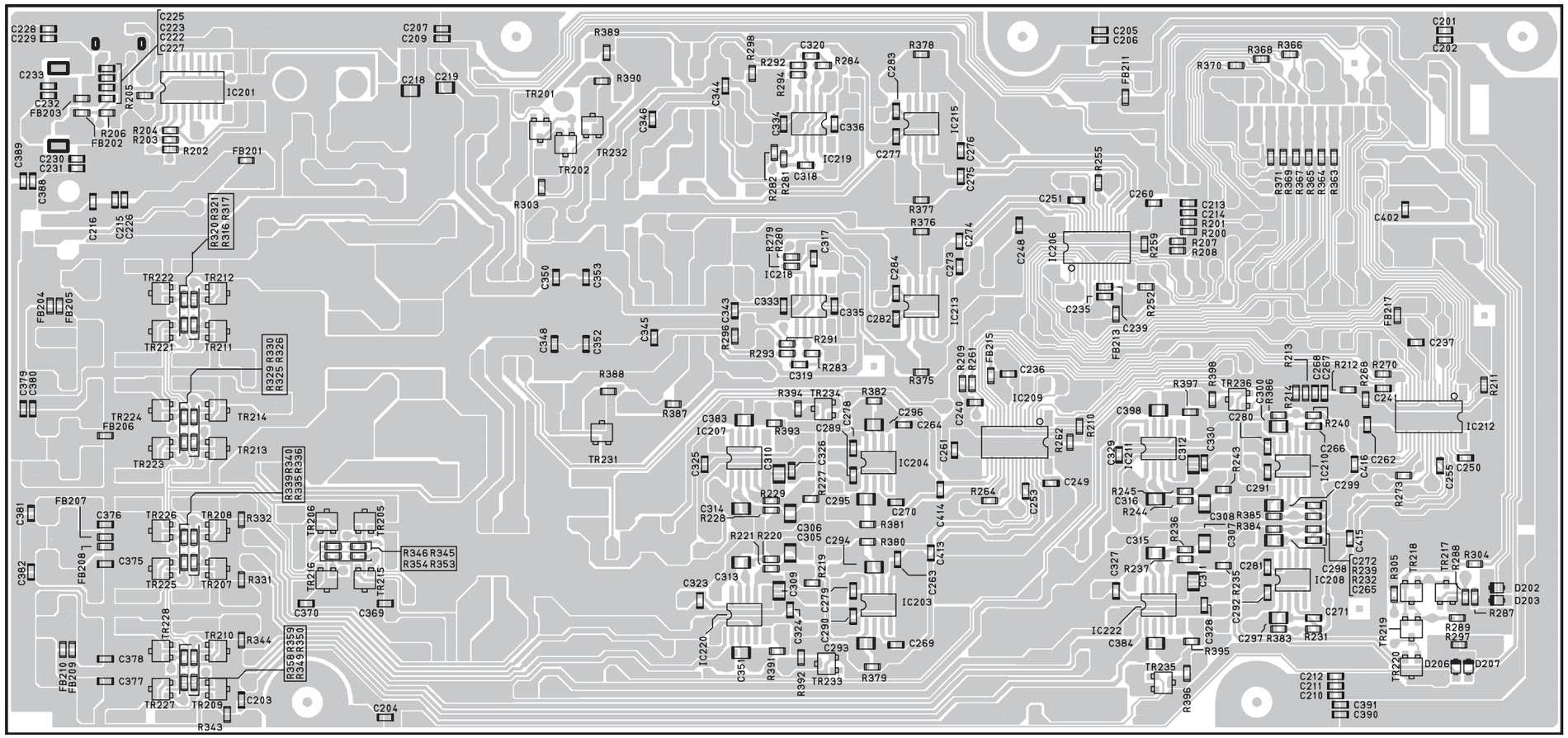
C228 C229
C225 C223 C222 C227
C233
C232
FB203
R205
IC201
R206
FB202
R204 R203
R202
FB201
C389
C230 C231
C388
C216
C215 C226
R320 R321 R316 R317
TR222
TR212
FB204
FB205
TR221
TR211
R329 R330 R325 R326
C379 C380
TR224
FB206
TR214
TR213
TR223
R339 R340 R335 R336
FB207
C381
C376
TR226
TR208
R332
TR206
R205
R346 R345 R354 R353
C382
FB208
C375
TR225
TR207
R331
TR216
TR215
C370
C369
TR228
TR210
R344
FB210 FB209
C378
C377
TR227
TR209
C203
R343
C204
C207 C209
C218
C219
R389
R390
TR201
TR202
TR232
C346
C344
R303
C350
C353
C348
C352
C345
R388
R387
TR231
R298
R292
C320
R284
R294
C334
C336
IC219
R282
R281
C318
C283
C277
IC215
C276
C275
R378
R377
R376
C274
R279
R280
C317
IC218
C273
C284
C333
C335
C282
IC213
R296
C343
R293
R291
C319
R283
R375
R394
TR234
R382
C383
IC207
R393
C289
C278
C296
C264
C325
C310
C326
IC204
C261
C240
R209
R261
FB215
C236
IC209
R210
R262
C249
C253
R264
C414
C314
R228
R229
C295
C270
R381
C306
C305
R221
R220
C294
R380
C413
C313
C323
C309
R219
C279
C263
IC203
C324
C290
C293
C269
IC220
C351
R391
R392
TR233
R379
C205 C206
FB211
C251
R255
C260
C213 C214 R201 R200 R207 R208
C248
IC206
R259
C235
R252
C239
FB213
C201 C202
R368
R366
R370
R371 R369 R367 R365 R364 R363
C402
FB217
C237
R213
C268 C267
R212
R268
R270
C241
R211
IC212
R214
R240
C266
C210
IC210
C262
C416
C255
C250
R273
C299
C291
R243
C330
C312
C211
C329
C398
R397
R398
TR236
C300
R386
C280
R245
C316
R244
C308
R385
R384
C307
R236
C315
C327
R237
C311
C281
C298
IC208
C272 R239 R232 C265
C292 R235
C297 R383
R231
C271
C328
R395
IC222
C384
TR235
R396
C415
R305
TR218
TR217
R288
R304
D202
D203
R287
TR219
R289
R297
TR220
D206
D207
C212
C211
C210
C391
C390

**FOIL SIDE**

## GU-3496 POWER/DISPLAY P.W.B. UNIT

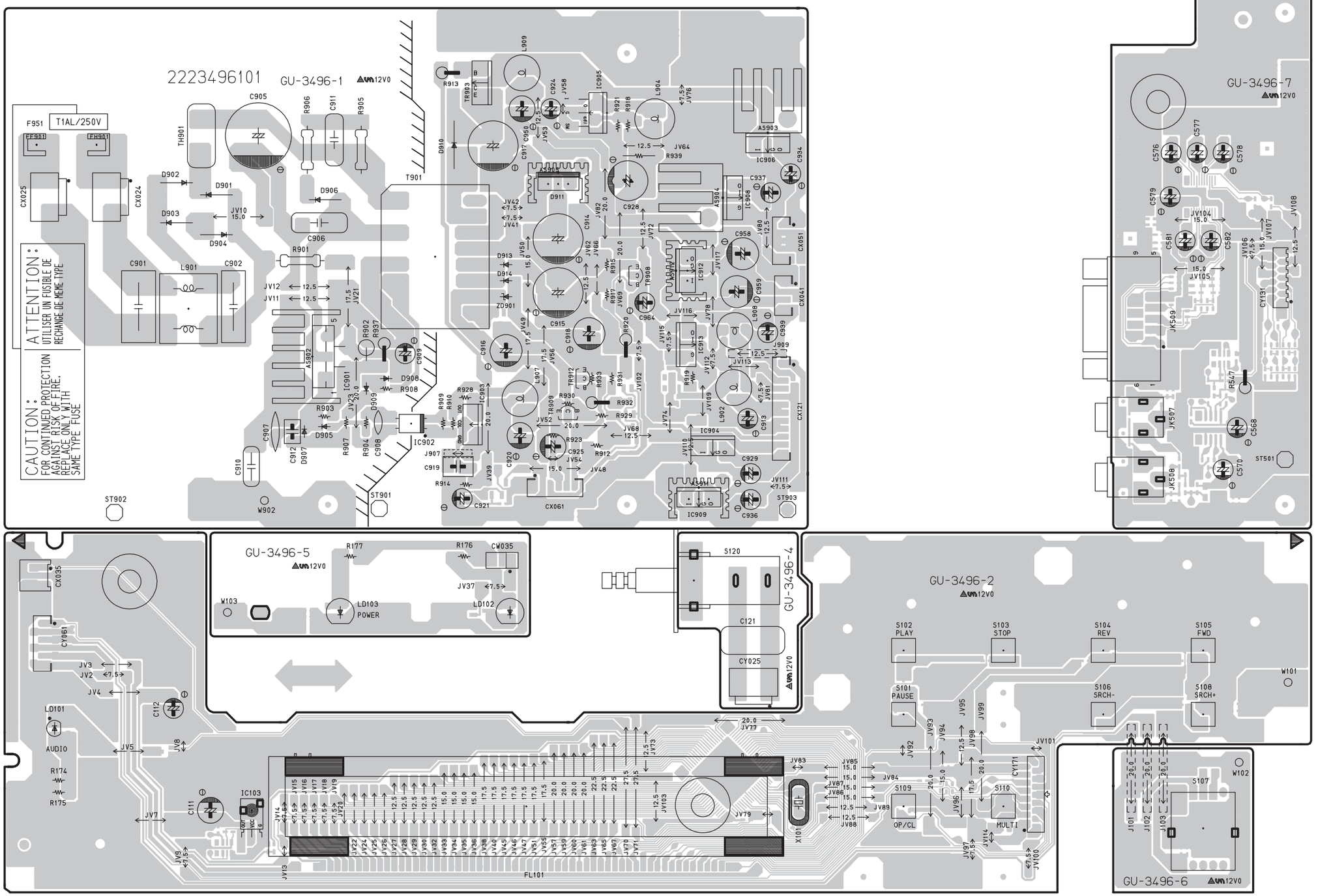


COMPONENT SIDE

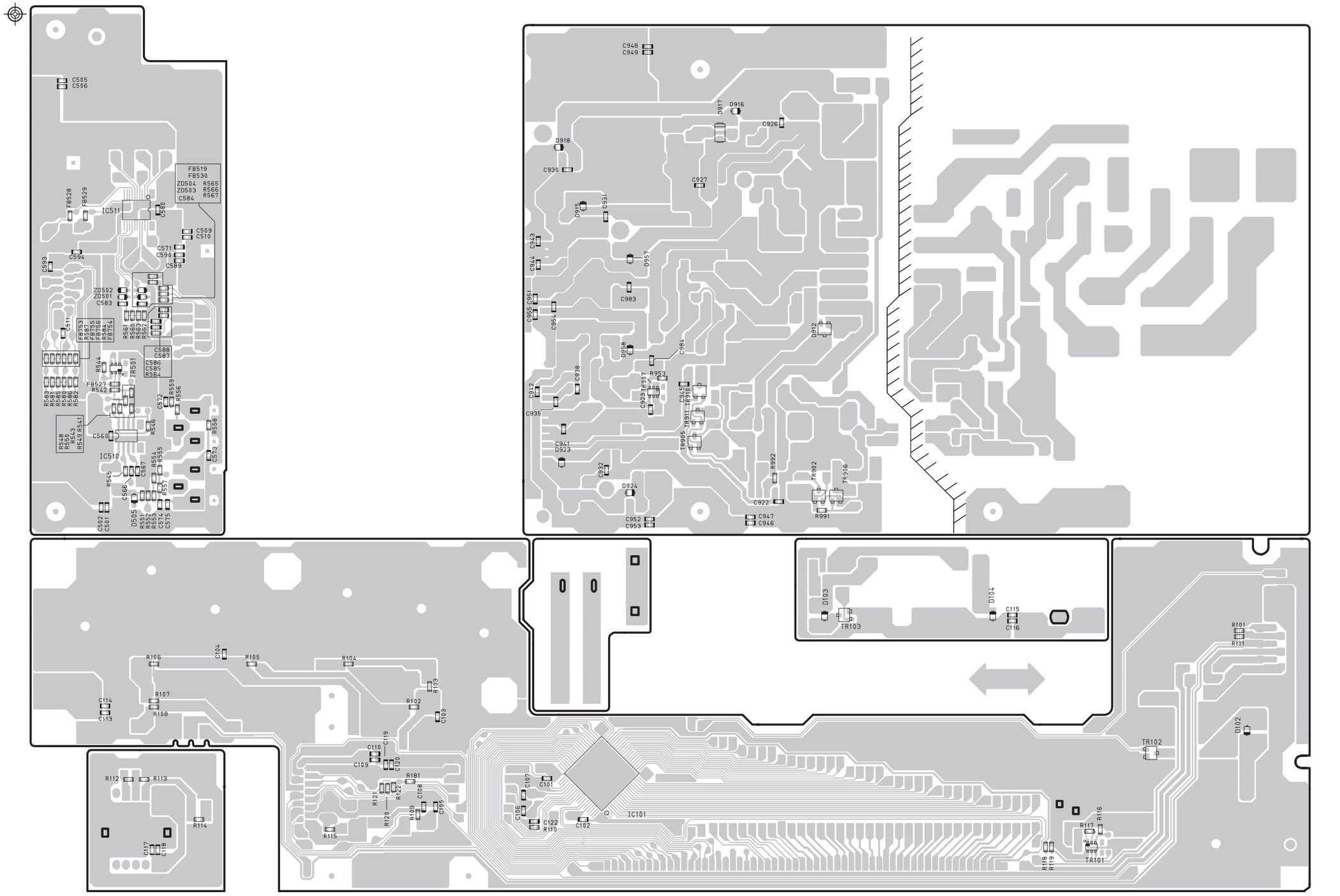
C505
C506
FB519
FB530
ZD504 R565
ZD503 R566
C584 R567
FB528
FB529
IC511
C580
C509
C510
C571
C590
C589
C593
C594
ZD502
ZD501
C583
C511
FB753
R587
FB755
FB756
R584
FB754
R561
R560
R563
R562
C588
C587
C586
C585
R564
R544
FB527
R542
TR501
R559
R558
C572
R546
R548
R550
R549
R543
R541
C569
R598
C578
IC510
R554
R555
R545
C568
R557
C566
C502
C501
D505
R551
R552
R553
R574
C575
C948
C949
D917
D916
C926
D918
C930
C927
D915
C931
C943
C944
D957
C983
C955
C951
C954
D912
D958
C984
R953
C938
C972
C923
TR907
C926
R955
C935
TR911
R956
TR905
C941
D923
C932
R992
TR902
TR906
D924
C922
C952
C953
C947
C946
R991
D103
D104
TR103
C115
C116
R101
R111
R106
C104
R105
R104
R103
R107
R102
C114
C113
R108
C103
C119
C110
C109
C120
R112
R113
R181
R121
R122
C108
C107
C101
C105
R109
C106
R120
C122
R110
C102
IC101
R114
R115
C117
C118
R118
R119
R117
R116
TR101
TR102
D102

FOIL SIDE

## GU-3497 VIDEO P.W.B. UNIT

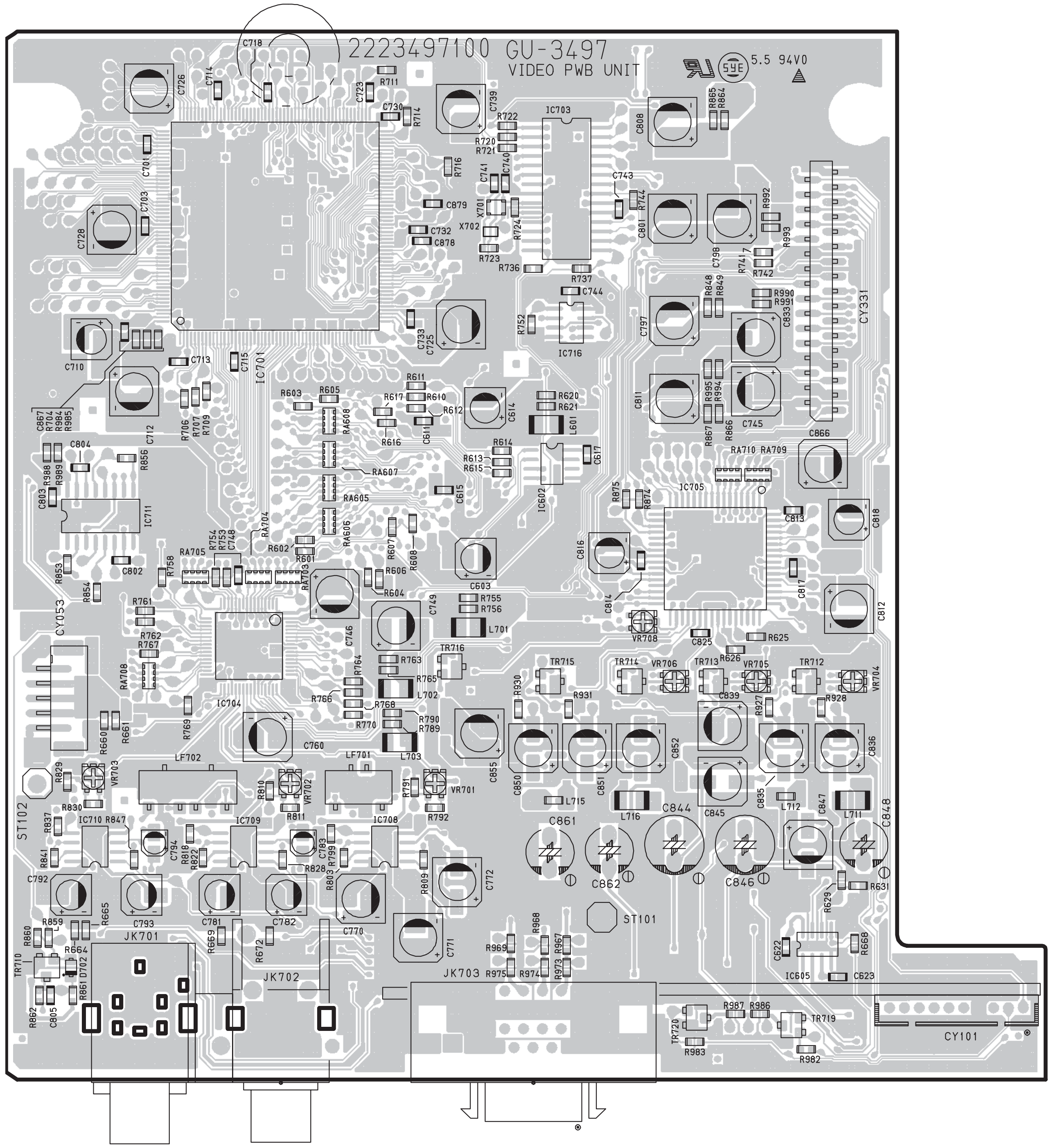


COMPONENT SIDE

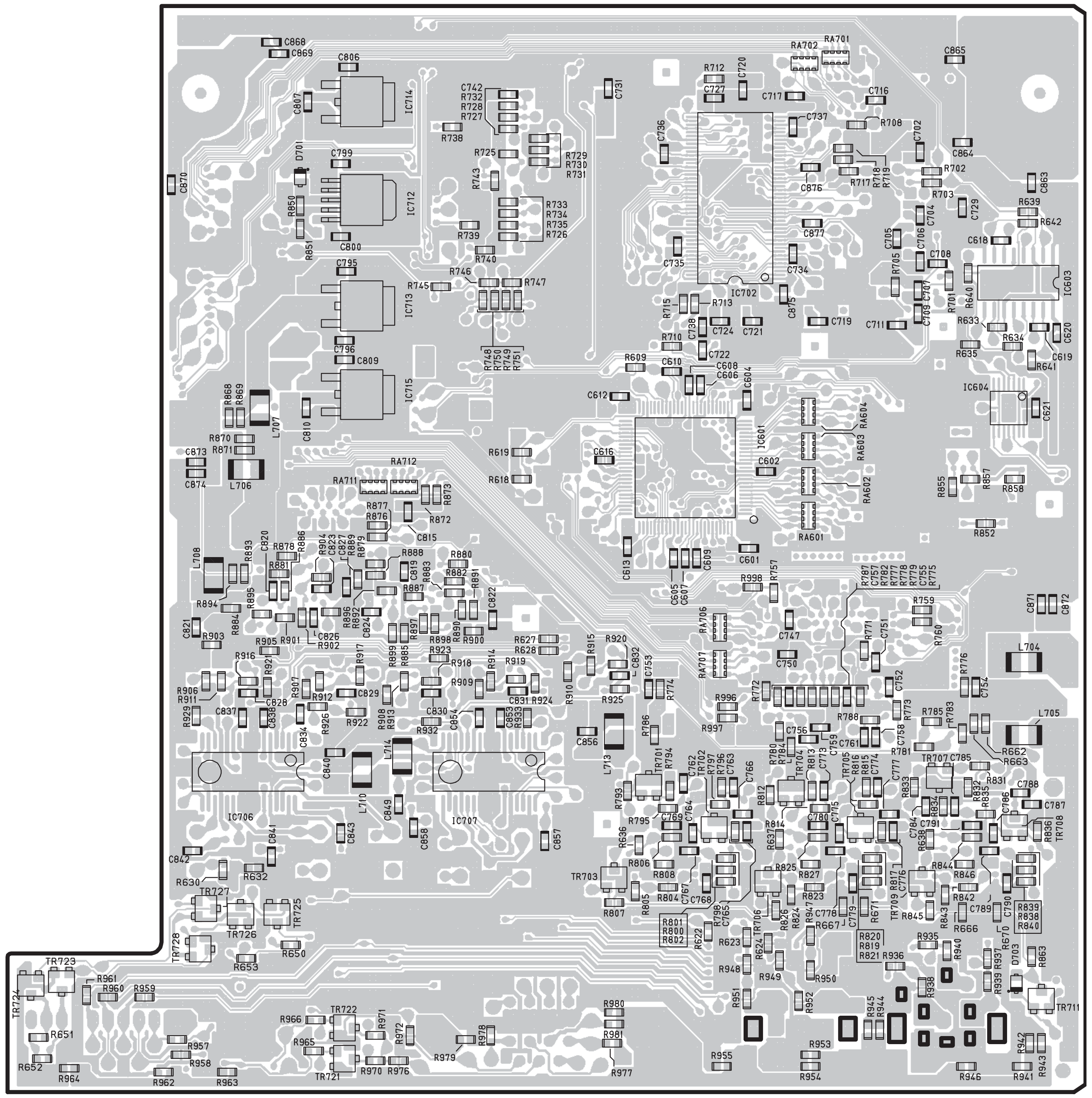

FOIL SIDE

## GU-3343 SCART P.W.B. UNIT (Europe model only)

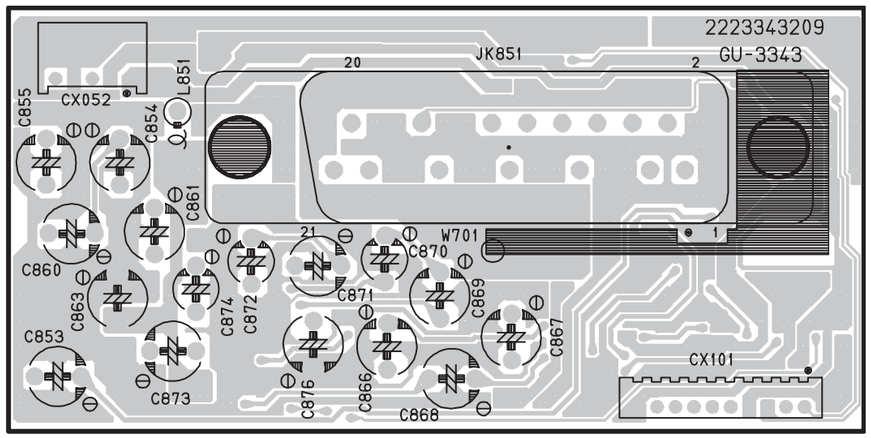


COMPONENT SIDE

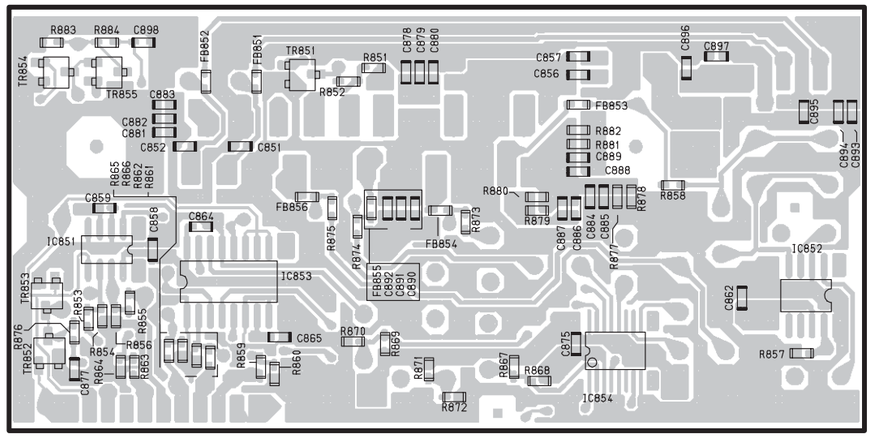


FOIL SIDE

# NOTE FOR PARTS LIST

- Part indicated with the mark "⦿" are not always in stock and possibly to take a long period of time for supplying, or in some case supplying of part may be refused.
- When ordering of part, clearly indicate "1" and "I" (i) to avoid mis-supplying.
- Ordering part without stating its part number can not be supplied.
- Part indicated with the mark "★" is not illustrated in the exploded view.
- Not including Carbon Film Resister ±5%, 1/4W Type in the P.W.Board parts list. (Refer to the Schematic Diagram for those parts.)
- Not including Carbon Chip Resister 1/16W Type in the P.W.Board parts list. (Refer to the Schematic Diagram for those parts.)

**WARNING:**
Parts marked with this symbol ⚠ have critical characteristics.
Use ONLY replacement parts recommended by the manufacturer.

# 部品表について

1．◉印の部品は常時在庫していませんので供給に長時間を要することがあります。
場合によっては、供給をお断りすることがあります。
2．部品を発注する際は特に数字の“1”と英字の“I”との区別をはっきり記入してください。
3．部品番号を表示していない部品は供給できません。
4．⚠ 印の部品は安全上重要な部品です。交換するときは、安全および性能維持のため必ず指定の部品をご使用ください。
5．★印のついている部品は分解図中には記載していません。
6．カーボン抵抗器± 5%、1/4W 型は記載していません。定数は回路図を参照願います。
7．カーボンチップ抵抗器 1/16W 型は記載していません。定数は回路図を参照願います。
8．部品表の抵抗器、コンデンサの品名記号の読み方は表を参照してください。

## ● Resistors

**Ex.:** RN Type / 14K Shape and performance / 2E Power / 182 Resistance / G Allowable error / FR Others

| | | | |
|---|---|---|---|
| RD : Carbon<br>RC : Composition<br>RS : Metal oxide film<br>RW : Winding<br>RN : Metal film<br>RK : Metal mixture | 2B : 1/8W<br>2E : 1/4W<br>2H : 1/2W<br>3A : 1W<br>3D : 2W<br>3F : 3W<br>3H : 5W | F : ±1%<br>G : ±2%<br>J : ±5%<br>K : ±10%<br>M : ±20% | P : Pulse-resistant type<br>NL : Low noise type<br>NB : Non-burning type<br>FR : Fuse-resistor<br>F : Lead wire forming |

**✻ Resistance**

1 8 2 ⇒ 1800 ohm = 1.8 kohm
Indicates number of zeros after effective number.
2-digit effective number.
• Units: ohm

1 R 2 ⇒ 1.2 ohm
1-digit effective number.
2-digit effective number, decimal point indicated by R.
• Units: ohm

## ● Capacitors

**Ex.:** CE Type / 04W Shape and performance / 1H Dielectric strength / 2R2 Capacity / M Allowable error / BP Others

| | | | |
|---|---|---|---|
| CE : Aluminum foil electrolytic<br>CA : Aluminum solid electrolytic<br>CS : Tantalum electrolytic<br>CQ : Film<br>CK : Ceramic<br><br>CC : Ceramic<br>CP : Oil<br>CM : Mica<br>CF : Metallized<br>CH : Metallized | 0J : 6.3V<br>1A : 10V<br>1C : 16V<br>1E : 25V<br>1V : 35V<br>1H : 50V<br>2A : 100V<br>2B : 125V<br>2C : 160V<br>2D : 200V<br>2E : 250V<br>2H : 500V<br>2J : 630V | F : ±1%<br>G : ±2%<br>J : ±5%<br>K : ±10%<br>M : ±20%<br>Z : +80% −20%<br>P : +100% −0%<br>C : ±0.25pF<br>D : ±0.5pF<br>= : Others | HS : High stability type<br>BP : Non-polar type<br>HR : Ripple-resistant type<br>DL : For change and discharge<br>HF : For assuring high requency<br>U : UL part<br>C : CSA part<br>W : UL-CSA type<br>F : Lead wire forming |

**✻ Capacity (electrolyte only)**

2 2 2 ⇒ 2200μF
Indicates number of zeros after effective number.
2-digit effective number.
• Units: μF.

2 R 2 ⇒ 2.2μF
1-digit effective number.
2-digit effective number, decimal point indicated by R.
• Units: μF.

**✻ Capacity (except electrolyte)**

2 2 2 ⇒ 2200pF=0.0022μF
(More than 2) Indicates number of zeros after effective number.
2-digit effective number.
• Units: pF.

2 2 1 ⇒ 220pF
(0 or 1) Indicates number of zeros after effective number.
2-digit effective number.
• Units: pF.

• When the dielectric strength is indicated in AC, "AC" is included after the dieelectric strength value.

## ●抵抗器

例) RN 種類 / 14K 形状特性 / 2E 電力 / 182 抵抗値 / G 許容差 / FR その他

| | | | |
|---|---|---|---|
| RD : カーボン<br>RC : 固定体<br>RS : 金属系皮膜<br>RW : 巻線<br>RN : 金属皮膜<br>RK : 金属混合体 | 2B : 1/8 W<br>2E : 1/4 W<br>2H : 1/2 W<br>3A : 1 W<br>3D : 2 W<br>3F : 3 W<br>3H : 5 W | F : ±1%<br>G : ±2%<br>J : ±5%<br>K : ±10%<br>M : ±20% | P : 耐パルス形<br>NL : 低雑音形<br>NB : 不燃形<br>FR : ヒューズ抵抗<br>F : リード線成形 |

＊抵抗値

18 2 ⇨ 1800Ω=1.8kΩ
有効数字につづく 0 の数を表わす。
2 桁の有効数字を表わす。

1R 2 ⇨ 1.2Ω
1 桁の有効数字を表わす。
2 桁の有効数字で小数点は R で表わす。

：単位はΩ

## ●コンデンサ

例) CE 種類 / 04W 形状特性 / 1H 耐圧 / 2R2 容量 / M 許容差 / BP その他

| | | | |
|---|---|---|---|
| CE : アルミ箔電解<br>CA : アルミ固体電解<br>CS : タンタル電解<br>CQ : フィルム<br>CK : セラミック<br>CC : セラミック<br>CP : オイル<br>CM : マイカ<br>CF : メタライズド<br>CH : メタライズド | 0J : 6.3 V<br>1A : 10 V<br>1C : 16 V<br>1E : 25 V<br>1V : 35 V<br>1H : 50 V<br>2A : 100 V<br>2B : 125 V<br>2C : 160 V<br>2D : 200 V<br>2E : 250 V<br>2H : 500 V<br>2J : 630 V | F : ±1%<br>G : ±2%<br>J : ±5%<br>K : ±10%<br>M : ±20%<br>Z : +80% −20%<br>P : +100% − 0%<br>C : ±0.25pF<br>D : ±0.5pF<br>= : その他 | HS : 高安定形<br>BP : 無極性形<br>HR : 耐リップル形<br>DL : 充放電対策用<br>HF : 高周波保証用<br>U : UL 部品<br>C : CSA 部品<br>W : UL-CSA 部品<br>F : リード線成形 |

＊容量値

● 電解コンデンサの場合

22 2 ⇨ 2200μF
有効数字につづく 0 の数を表わす。
2 桁の有効数字を表わす。
：単位はμF

2R 2 ⇨ 2.2μF
1 桁の有効数字を表わす。
2 桁の有効数字で小数点は R で表わす。
：単位はμF

● 電解コンデンサ以外の場合

22 2 ⇨ 2200pF=0.0022μF
有効数字につづく 0 の数を表わす。
(0 の数が 2 以上の場合)
2 桁の有効数字を表わす。
：単位はpF

22 1 ⇨ 220pF
有効数字につづく 0 の数を表わす。
(0 の数が 0 または 1 の場合)
2 桁の有効数字を表わす。
：単位はpF

● 耐圧を交流で表示する場合は、耐圧表示の次に「AC」を表示します。

# PARTS LIST OF P.W.B. UNIT ASS'Y

**Note :** The symbols in the column "Remarks" indicate the following destinations.
E3 : U.S.A. & Canada model
E2 : Europe model
JP : Japan model

## GU-3494 MAIN UNIT

| | Ref. No. | Part No. | Part Name | Remarks | | New |
|---|---|---|---|---|---|---|
| | **SEMICONDUCTORS GROUP** | | | | | |
| | IC101 | 262 3257 005 | M65776BFP | | | * |
| | IC102 | 262 3215 005 | M32102S6FP | | | * |
| | IC103 | GEN 6237 | ROM SUB ASS'Y(MIT) | MX29LV160BTC-90 | | * |
| | IC104 | 262 3119 004 | W986416DH-7 | | | |
| | IC105 | 262 3216 907 | SM8707EV | | | * |
| | IC106 | 262 2518 907 | SN74LV74APW-EL2 | | | |
| | IC107 | 262 3046 902 | TC7WH157FU | | | |
| | IC108 | 262 2514 901 | SN74LV138APW-EL2 | | | |
| | IC109 | 262 2778 909 | SN74LV273ANS | | | |
| | IC112 | 262 1738 908 | TC7SU04F (TAPE) | | | |
| | IC113 | 262 3053 908 | S-24C02BFJ-TB | | | |
| | IC114 | 263 1079 903 | BA033FP | | | |
| | IC115 | 262 2977 904 | BA18BC0FP-E2 | | | |
| | IC116 | 263 1110 901 | PQ070XZ01ZP | | | |
| | IC117 | 263 1079 903 | BA033FP | | | |
| | IC118 | 262 2977 904 | BA18BC0FP-E2 | | | |
| | IC201 | 262 3121 005 | ADSPMEL322 | | | |
| | IC202 | GEN 6243 | BASS M.ROM SUB ASS'Y | AT49LV002-70TC | | * |
| | IC203 | 262 2959 906 | SN74LV244APW | | | |
| | IC204-206 | 262 3129 900 | TC74VHC157AF-EL | | | |
| | IC207 | 262 3198 902 | TC74VHC157FT-EL | | | |
| | IC301 | 262 3054 004 | MN102H460B | | | |
| | IC302 | GEN 6236 | ROM SUB ASS'Y(PANEL) | AT49LV1025-70JC | | * |
| | IC303 | 262 2452 908 | MN1382-R(TX) | | | |
| | IC401 | 262 3217 003 | CXD2753R | | | * |
| | IC402 | 262 2875 006 | 16M SDRAM(TSOP)-7/8 | | | |
| | IC403 | 262 3195 905 | AD8062-SO8 | | | * |
| | IC404 | 262 3236 000 | EPM3064A | | | * |
| | IC405 | 262 2515 900 | SN74LV04APW-EL2 | | | |
| | IC406 | 262 2570 903 | TC7W241FU(TE12L) | | | |
| | IC501 | 262 3219 001 | CXD1881AR | | | * |
| | IC502 | 262 3218 002 | CXD1885Q | | | * |
| | IC503 | 262 3210 000 | M11L16161SA-45T | | | |
| | IC505 | 263 1109 909 | AN8471SA | | | |
| | IC507 | 262 1782 909 | TC7S08FTE85L | | | |
| | IC508 | 262 3221 002 | FAN8042 | | | * |
| | TR501,502 | 272 0160 901 | 2SB1132T100Q | | | |
| | TR503 | 273 0384 900 | 2SC2412KT96(S) | | | |
| | D101-105 | 276 0717 903 | 1SS355 TE-17 | | | |
| | D301 | 276 0717 903 | 1SS355 TE-17 | | | |
| | D501,502 | 276 0711 909 | MA152WA | | | |
| | **RESISTORS GROUP** | | | | | |
| | RA101-111 | 247 9003 908 | MNR14=220JE0AB | | | |
| | RA112-115 | 247 9007 917 | MNR14=103JE0 | | | |
| | RA401-405 | 247 9003 908 | MNR14=220JE0AB | | | |
| | RA503,504 | 247 9007 904 | MNR14=101JE0 | | | |
| | RA506-509 | 247 9007 904 | MNR14=101JE0 | | | |
| | RA523 | 247 9007 904 | MNR14=101JE0 | | | |
| | RA524-528 | 247 9007 917 | MNR14=103JE0 | | | |

| | Ref. No. | Part No. | Part Name | Remarks | | New |
|---|---|---|---|---|---|---|
| | **CAPACITORS GROUP** | | | | | |
| | C103,104 | 254 4464 906 | CE67C0J101MT | | | |
| | C105,106 | 257 0511 904 | CK73F1H103ZT | | | |
| | C107 | 257 0512 903 | CK73F1E104ZT | | | |
| | C108,109 | 257 0511 904 | CK73F1H103ZT | | | |
| | C110,111 | 257 0512 903 | CK73F1E104ZT | | | |
| | C112 | 257 0511 904 | CK73F1H103ZT | | | |
| | C113 | 257 0512 903 | CK73F1E104ZT | | | |
| | C114 | 257 0511 904 | CK73F1H103ZT | | | |
| | C117 | 257 0512 903 | CK73F1E104ZT | | | |
| | C118,119 | 254 4465 905 | CE67C1C220MT | | | |
| | C120,121 | 257 0512 903 | CK73F1E104ZT | | | |
| | C122,123 | 257 0511 904 | CK73F1H103ZT | | | |
| | C124 | 257 0512 903 | CK73F1E104ZT | | | |
| | C125,126 | 257 0511 904 | CK73F1H103ZT | | | |
| | C127-134 | 257 0512 903 | CK73F1E104ZT | | | |
| | C136-138 | 257 0512 903 | CK73F1E104ZT | | | |
| | C139 | 254 4464 906 | CE67C0J101MT | | | |
| | C140-143 | 257 0512 903 | CK73F1E104ZT | | | |
| | C145,146 | 257 0512 903 | CK73F1E104ZT | | | |
| | C147 | 254 4465 905 | CE67C1C220MT | | | |
| | C151,152 | 257 0511 904 | CK73F1H103ZT | | | |
| | C153,154 | 254 4464 906 | CE67C0J101MT | | | |
| | C155-160 | 257 0512 903 | CK73F1E104ZT | | | |
| | C161 | 257 0511 904 | CK73F1H103ZT | | | |
| | C162 | 257 0512 903 | CK73F1E104ZT | | | |
| | C164 | 257 0512 903 | CK73F1E104ZT | | | |
| | C165 | 257 0506 951 | CC73CH1H101JT | | | |
| | C166 | 257 0512 903 | CK73F1E104ZT | | | |
| | C168-171 | 257 0512 903 | CK73F1E104ZT | | | |
| | C172 | 257 0509 929 | CK73B1H102KT | | | |
| | C173-176 | 257 0512 903 | CK73F1E104ZT | | | |
| | C177,178 | 257 0502 997 | CC73CH1H7R0DT | | | |
| | C179 | 257 0512 903 | CK73F1E104ZT | | | |
| | C180 | 254 4464 906 | CE67C0J101MT | | | |
| | C181 | 257 0512 903 | CK73F1E104ZT | | | |
| | C182 | 257 0509 929 | CK73B1H102KT | | | |
| | C183 | 257 0512 903 | CK73F1E104ZT | | | |
| | C184 | 254 4465 905 | CE67C1C220MT | | | |
| | C185 | 257 0512 903 | CK73F1E104ZT | | | |
| | C186 | 257 0509 929 | CK73B1H102KT | | | |
| | C189-192 | 257 0512 903 | CK73F1E104ZT | | | |
| | C194,195 | 257 0512 903 | CK73F1E104ZT | | | |
| | C196 | 257 0511 904 | CK73F1H103ZT | | | |
| | C197-200 | 257 0512 903 | CK73F1E104ZT | | | |
| | C202 | 254 4465 905 | CE67C1C220MT | | | |
| | C203,204 | 257 0512 903 | CK73F1E104ZT | | | |
| | C205 | 254 4465 905 | CE67C1C220MT | | | |
| | C206,207 | 257 0512 903 | CK73F1E104ZT | | | |
| | C208 | 257 0504 924 | CC73CH1H270JT | | | |
| | C209 | 257 0504 940 | CC73CH1H330JT | | | |
| | C210 | 257 0511 904 | CK73F1H103ZT | | | |
| | C211 | 257 0509 929 | CK73B1H102KT | | | |
| | C212 | 257 0511 904 | CK73F1H103ZT | | | |
| | C213 | 257 0509 929 | CK73B1H102KT | | | |
| | C214 | 257 0511 904 | CK73F1H103ZT | | | |
| | C215 | 257 0509 929 | CK73B1H102KT | | | |
| | C216 | 257 0512 903 | CK73F1E104ZT | | | |
| | C217 | 257 0509 929 | CK73B1H102KT | | | |
| | C218 | 257 0512 903 | CK73F1E104ZT | | | |
| | C219 | 257 0509 929 | CK73B1H102KT | | | |

| | Ref. No. | Part No. | Part Name | Remarks | | New |
|---|---|---|---|---|---|---|
| | C220,221 | 254 4465 905 | CE67C1C220MT | | | |
| | C222-225 | 257 0512 903 | CK73F1E104ZT | | | |
| | C226 | 257 0509 929 | CK73B1H102KT | | | |
| | C227 | 257 0512 903 | CK73F1E104ZT | | | |
| | C228 | 257 0509 929 | CK73B1H102KT | | | |
| | C230-232 | 254 4464 906 | CE67C0J101MT | | | |
| | C234,235 | 257 0512 903 | CK73F1E104ZT | | | |
| | C236 | 254 4465 905 | CE67C1C220MT | | | |
| | C237 | 257 0512 903 | CK73F1E104ZT | | | |
| | C240 | 257 0512 903 | CK73F1E104ZT | | | |
| | C241 | 257 0509 929 | CK73B1H102KT | | | |
| | C242 | 257 0512 903 | CK73F1E104ZT | | | |
| | C243 | 257 0509 929 | CK73B1H102KT | | | |
| | C244 | 257 0512 903 | CK73F1E104ZT | | | |
| | C245 | 254 4464 906 | CE67C0J101MT | | | |
| | C246 | 254 4465 905 | CE67C1C220MT | | | |
| | C247,248 | 257 0511 904 | CK73F1H103ZT | | | |
| | C249 | 257 0512 903 | CK73F1E104ZT | | | |
| | C250 | 257 0509 929 | CK73B1H102KT | | | |
| | C251 | 257 0512 903 | CK73F1E104ZT | | | |
| | C252 | 257 0509 929 | CK73B1H102KT | | | |
| | C253 | 257 0512 903 | CK73F1E104ZT | | | |
| | C254,255 | 254 4465 905 | CE67C1C220MT | | | |
| | C257 | 257 0512 903 | CK73F1E104ZT | | | |
| | C258 | 257 0509 929 | CK73B1H102KT | | | |
| | C259 | 257 0511 904 | CK73F1H103ZT | | | |
| | C260,261 | 257 0512 903 | CK73F1E104ZT | | | |
| | C301,302 | 257 0512 903 | CK73F1E104ZT | | | |
| | C304,305 | 257 0512 903 | CK73F1E104ZT | | | |
| | C306 | 254 4464 906 | CE67C0J101MT | | | |
| | C307-310 | 257 0512 903 | CK73F1E104ZT | | | |
| | C311 | 257 0503 967 | CC73CH1H150JT | | | |
| | C312 | 257 0512 903 | CK73F1E104ZT | | | |
| | C313 | 257 0503 967 | CC73CH1H150JT | | | |
| | C314 | 257 0509 929 | CK73B1H102KT | | | |
| | C315,316 | 257 0512 903 | CK73F1E104ZT | | | |
| | C317 | 257 0509 929 | CK73B1H102KT | | | |
| | C318-320 | 257 0511 904 | CK73F1H103ZT | | | |
| | C321 | 254 4464 906 | CE67C0J101MT | | | |
| | C322 | 257 0511 904 | CK73F1H103ZT | | | |
| | C323 | 254 4465 918 | CE67C1C470MT | | | |
| | C401-403 | 257 0512 903 | CK73F1E104ZT | | | |
| | C404 | 254 4464 906 | CE67C0J101MT | | | |
| | C405 | 257 0512 903 | CK73F1E104ZT | | | |
| | C406 | 257 0501 901 | CK73B1H103KT (1608) | | | |
| | C407,408 | 257 0512 903 | CK73F1E104ZT | | | |
| | C409,410 | 254 4465 905 | CE67C1C220MT | | | |
| | C411,412 | 257 0512 903 | CK73F1E104ZT | | | |
| | C413,414 | 257 0502 942 | CC73CH1H2R0CT | | | |
| | C415-419 | 257 0512 903 | CK73F1E104ZT | | | |
| | C420 | 254 4465 905 | CE67C1C220MT | | | |
| | C421,422 | 257 0512 903 | CK73F1E104ZT | | | |
| | C423 | 254 4465 905 | CE67C1C220MT | | | |
| | C424-429 | 257 0512 903 | CK73F1E104ZT | | | |
| | C430 | 254 4464 906 | CE67C0J101MT | | | |
| | C431-440 | 257 0512 903 | CK73F1E104ZT | | | |
| | C441 | 254 4464 906 | CE67C0J101MT | | | |
| | C442 | 257 0512 903 | CK73F1E104ZT | | | |
| | C443 | 257 4010 906 | CE67C1C101MT | | | |
| | C444,445 | 254 4464 906 | CE67C0J101MT | | | |
| | C447 | 254 4464 906 | CE67C0J101MT | | | |

| | Ref. No. | Part No. | Part Name | Remarks | | New |
|---|---|---|---|---|---|---|
| | C448-450 | 257 0512 903 | CK73F1E104ZT | | | |
| | C452 | 257 0512 903 | CK73F1E104ZT | | | |
| | C453,454 | 254 4465 905 | CE67C1C220MT | | | |
| | C455 | 257 0512 903 | CK73F1E104ZT | | | |
| | C456 | 254 4465 905 | CE67C1C220MT | | | |
| | C457-460 | 257 0512 903 | CK73F1E104ZT | | | |
| | C461 | 254 4464 906 | CE67C0J101MT | | | |
| | C466 | 257 0511 904 | CK73F1H103ZT | | | |
| | C501 | 254 4465 905 | CE67C1C220MT | | | |
| | C502,503 | 257 0511 904 | CK73F1H103ZT | | | |
| | C510 | 254 4465 905 | CE67C1C220MT | | | |
| | C511,512 | 257 0511 904 | CK73F1H103ZT | | | |
| | C513-516 | 257 0509 990 | CK73B1H222KT | | | |
| | C517-520 | 257 0504 908 | CC73CH1H220JT | | | |
| | C521 | 257 0516 954 | CK73B1E104KT | | | |
| | C522,523 | 257 0510 934 | CK73B1H472KT | | | |
| | C524 | 257 0507 976 | CC73CH1H331JT | | | |
| | C525,526 | 257 0511 904 | CK73F1H103ZT | | | |
| | C527 | 254 4465 905 | CE67C1C220MT | | | |
| | C528 | 254 4465 918 | CE67C1C470MT | | | |
| | C529 | 257 0509 929 | CK73B1H102KT | | | |
| | C530 | 254 4465 918 | CE67C1C470MT | | | |
| | C531 | 257 0509 929 | CK73B1H102KT | | | |
| | C532-535 | 257 0516 954 | CK73B1E104KT | | | |
| | C536 | 257 0501 901 | CK73B1H103KT (1608) | | | |
| | C537 | 257 0516 954 | CK73B1E104KT | | | |
| | C538 | 257 0501 901 | CK73B1H103KT (1608) | | | |
| | C539 | 257 0506 993 | CC73CH1H151JT | | | |
| | C540 | 257 0509 929 | CK73B1H102KT | | | |
| | C545 | 254 4464 906 | CE67C0J101MT | | | |
| | C546,547 | 257 0512 903 | CK73F1E104ZT | | | |
| | C548 | 257 0511 904 | CK73F1H103ZT | | | |
| | C549 | 257 4010 906 | CE67C1C101MT | | | |
| | C550 | 257 0512 903 | CK73F1E104ZT | | | |
| | C551-553 | 257 0520 911 | CK73B1A224KT | | | |
| | C554 | 257 0516 954 | CK73B1E104KT | | | |
| | C555,556 | 257 0512 903 | CK73F1E104ZT | | | |
| | C558 | 257 0520 911 | CK73B1A224KT | | | |
| | C559 | 257 0512 903 | CK73F1E104ZT | | | |
| | C560 | 254 4465 905 | CE67C1C220MT | | | |
| | C561 | 257 0501 901 | CK73B1H103KT (1608) | | | |
| | C562 | 257 0516 941 | CK73B1E473KT | | | |
| | C563,564 | 257 0511 904 | CK73F1H103ZT | | | |
| | C565 | 254 4465 905 | CE67C1C220MT | | | |
| | C566 | 257 0511 904 | CK73F1H103ZT | | | |
| | C567 | 254 4465 905 | CE67C1C220MT | | | |
| | C568 | 257 0511 904 | CK73F1H103ZT | | | |
| | C569 | 257 0508 917 | CC73CH1H471JT | | | |
| | C570 | 254 4464 919 | CE67C0J471MT | | | |
| | C571 | 254 4465 905 | CE67C1C220MT | | | |
| | C572-576 | 257 0511 904 | CK73F1H103ZT | | | |
| | C578 | 257 0511 904 | CK73F1H103ZT | | | |
| | C580 | 257 0511 904 | CK73F1H103ZT | | | |
| | C581 | 257 0516 941 | CK73B1E473KT | | | |
| | C582-584 | 257 0511 904 | CK73F1H103ZT | | | |
| | C585,586 | 257 0508 917 | CC73CH1H471JT | | | |
| | C587 | 257 0511 904 | CK73F1H103ZT | | | |
| | C588 | 257 0507 976 | CC73CH1H331JT | | | |
| | C589 | 257 0520 908 | CK73B1A154KT | | | * |
| | C590 | 254 4464 906 | CE67C0J101MT | | | |
| | C591 | 257 0507 976 | CC73CH1H331JT | | | |

| | Ref. No. | Part No. | Part Name | Remarks | | New |
|---|---|---|---|---|---|---|
| | C592 | 257 0508 917 | CC73CH1H471JT | | | |
| | C593 | 257 0520 908 | CK73B1A154KT | | | * |
| | C594 | 257 0508 917 | CC73CH1H471JT | | | |
| | C595 | 257 0516 954 | CK73B1E104KT | | | |
| | C596 | 257 0511 904 | CK73F1H103ZT | | | |
| | C597 | 257 0506 951 | CC73CH1H101JT | | | |
| | C598,599 | 257 0516 909 | CK73B1E223KT | | | |
| | C600-606 | 257 0511 904 | CK73F1H103ZT | | | |
| | C607 | 257 0512 903 | CK73F1E104ZT | | | |
| | C608,609 | 254 4465 905 | CE67C1C220MT | | | |
| | C612 | 257 0512 903 | CK73F1E104ZT | | | |
| | C615 | 257 0509 929 | CK73B1H102KT | | | |
| | C616,617 | 257 0512 903 | CK73F1E104ZT | | | |
| | C618 | 254 4465 905 | CE67C1C220MT | | | |
| | C619,620 | 257 0511 904 | CK73F1H103ZT | | | |
| | C621 | 254 4465 905 | CE67C1C220MT | | | |
| | C622-625 | 257 0511 904 | CK73F1H103ZT | | | |
| | C629,630 | 254 4465 905 | CE67C1C220MT | | | |
| | C631,632 | 257 0510 950 | CK73B1H682KT | | | |
| | C633 | 257 0509 929 | CK73B1H102KT | | | |
| | C634,635 | 257 0506 951 | CC73CH1H101JT | | | |
| | C636 | 257 0501 901 | CK73B1H103KT (1608) | | | |
| | C637 | 257 0511 904 | CK73F1H103ZT | | | |
| | C639 | 257 0510 950 | CK73B1H682KT | | | |
| | **OTHER PARTS GROUP** | | | | | |
| | CX039 | 205 0863 936 | 3P PH CON.BASE(L) | | | |
| | CX052 | 205 0863 952 | 5P PH CON.BASE(L) | | | |
| | CX131 | 205 1170 932 | 13P FFC BASE(FMNBMTT | | | |
| | CX151 | 205 1149 905 | 15P FFC BASE(52207) | | | |
| | CX171 | 205 1174 909 | 17P FFC BASE(FMNSMT) | | | |
| | CX241 | 205 1152 905 | 24P FFC BASE(FLZ-SM1 | | | |
| | CX271 | 205 1174 925 | 27P FFC BASE(FMNSMT) | | | * |
| | CX331 | 205 1170 945 | 33P FFC BASE(FMNBMTT | | | * |
| | CY121 | 205 0895 917 | 12P PH CON. BASE(T) | | | * |
| | FB101-104 | 235 0130 903 | CHIP EMIFIL(11A121) | | | |
| | FB108,109 | 235 0130 903 | CHIP EMIFIL(11A121) | | | |
| | FB110-128 | 247 2018 903 | RM73B--0R0KT | | | |
| | FB301-318 | 247 2018 903 | RM73B--0R0KT | | | |
| | FB401-403 | 235 0136 907 | FBMJ1608HS280NT | | | |
| | FB405-408 | 235 0136 907 | FBMJ1608HS280NT | | | |
| | FB501-503 | 235 0130 903 | CHIP EMIFIL(11A121) | | | |
| | L101 | 235 0048 901 | EMI FILTER (103)TP | | | |
| | X101 | 399 0619 906 | X'TAL(27MHZ) | | | |
| | X103 | 399 0806 900 | X'TAL(12.288 FCX03) | | | |
| | X301 | 399 0698 901 | CSACW2500MX01 | | | |
| | | 473 7506 019 | 2X6 CBTS (P)-Z | | | |

GU-3495 AUDIO UNIT

| | Ref. No. | Part No. | Part Name | Remarks | | New |
|---|---|---|---|---|---|---|
| | **SEMICONDUCTORS GROUP** | | | | | |
| | IC201 | 262 1421 901 | TC74HCT04AF(TAPE1) | | | |
| | IC202 | 269 0187 001 | GP1FA551TZ | | | |
| | IC203,204 | 263 0896 909 | NJM2068MD-TE1 | | | |
| | IC205 | 263 1048 002 | BA033T | | | |
| | IC206 | 262 3229 907 | DSD1790DBR | | | |
| | IC207,208 | 263 0896 909 | NJM2068MD-TE1 | | | |
| | IC209 | 262 3229 907 | DSD1790DBR | | | |
| | IC210,211 | 263 0896 909 | NJM2068MD-TE1 | | | |
| | IC212 | 262 3229 907 | DSD1790DBR | | | |
| | IC213 | 263 0896 909 | NJM2068MD-TE1 | | | |
| | IC215 | 263 0896 909 | NJM2068MD-TE1 | | | |
| | IC216,217 | 263 0990 009 | OP275GP | | | |
| | IC218,219 | 263 0615 902 | BA15218F-DXE2 | | | |
| | IC220 | 263 0896 909 | NJM2068MD-TE1 | | | |
| | IC221 | 263 0809 006 | NJM7805FA(S) | | | |
| | IC222 | 263 0896 909 | NJM2068MD-TE1 | | | |
| | TR201 | 269 0119 901 | DTA124EKT96(TAPE) | | | |
| | TR202 | 269 0082 902 | DTC114EKT96 | | | |
| | TR205,206 | 273 0460 905 | KTC2875B-RTK | for E2 | | |
| | TR207-214 | 273 0460 905 | KTC2875B-RTK | | | |
| | TR215,216 | 273 0460 905 | KTC2875B-RTK | for E2 | | |
| | TR217 | 273 0426 907 | 2SC2412KLNT146 | | | |
| | TR218 | 269 0083 901 | DTA114EKT96 | | | |
| | TR219 | 269 0119 901 | DTA124EKT96(TAPE) | | | |
| | TR220 | 269 0082 902 | DTC114EKT96 | | | |
| | TR221-228 | 273 0460 905 | KTC2875B-RTK | | | |
| | TR231-236 | 273 0460 905 | KTC2875B-RTK | | | |
| | D201 | 276 0432 903 | 1SS270A TE (TAPE) | | | |
| | D202,203 | 276 0717 903 | 1SS355 TE-17 | | | |
| | D206,207 | 276 0717 903 | 1SS355 TE-17 | | | |
| | RESISTORS GROUP | | | | | |
| | R290 | 244 2052 915 | RS14B3A182JNBST(S) | | | |
| | R295 | 241 2423 927 | RD14B2E222JT(PSNB) | | | |
| | **CAPACITORS GROUP** | | | | | |
| | C201 | 257 0512 903 | CK73F1E104ZT | | | |
| | C202 | 257 0511 904 | CK73F1H103ZT | | | |
| | C203 | 257 0512 903 | CK73F1E104ZT | | | |
| | C204 | 257 0511 904 | CK73F1H103ZT | | | |
| | C205 | 257 0512 903 | CK73F1E104ZT | | | |
| | C206 | 257 0511 904 | CK73F1H103ZT | | | |
| | C207 | 257 0512 903 | CK73F1E104ZT | | | |
| | C209 | 257 0509 929 | CK73B1H102KT | | | |
| | C210 | 257 0512 903 | CK73F1E104ZT | | | |
| | C211 | 257 0511 904 | CK73F1H103ZT | | | |
| | C212 | 257 0509 929 | CK73B1H102KT | | | |
| | C213 | 257 0512 903 | CK73F1E104ZT | | | |
| | C214,215 | 257 0509 929 | CK73B1H102KT | | | |
| | C216 | 257 0512 903 | CK73F1E104ZT | | | |
| | C217 | 254 4525 900 | CE04W1H330MT SMG/RE3 | | | |
| | C218,219 | 257 0014 935 | CK73F1E104ZT | | | |
| | C220,221 | 254 4382 910 | CE04W1C221MT(ASF) | | | |
| | C223 | 257 0512 903 | CK73F1E104ZT | | | |

| | Ref. No. | Part No. | Part Name | Remarks | | New |
|---|---|---|---|---|---|---|
| | C224 | 254 4524 985 | CE04W1H100MT SMG/RE3 | | | |
| | C225 | 257 0509 929 | CK73B1H102KT | | | |
| | C226 | 257 0501 901 | CK73B1H103KT (1608) | | | |
| | C228 | 257 0512 903 | CK73F1E104ZT | | | |
| | C229 | 257 0509 929 | CK73B1H102KT | | | |
| | C232 | 257 0512 903 | CK73F1E104ZT | | | |
| | C233 | 257 0509 929 | CK73B1H102KT | | | |
| | C234 | 254 4452 701 | CE04W1C471MC(ASF) | | | |
| | C235-237 | 257 0512 903 | CK73F1E104ZT | | | |
| | C239-241 | 257 0501 901 | CK73B1H103KT (1608) | | | |
| | C243-247 | 254 4313 921 | CE04W1H220MT(ASF) | | | |
| | C248-250 | 257 0501 901 | CK73B1H103KT (1608) | | | |
| | C251 | 257 0511 904 | CK73F1H103ZT | | | |
| | C253 | 257 0511 904 | CK73F1H103ZT | | | |
| | C255 | 257 0511 904 | CK73F1H103ZT | | | |
| | C258,259 | 254 4313 921 | CE04W1H220MT(ASF) | | | |
| | C260-262 | 257 0512 903 | CK73F1E104ZT | | | |
| | C277-284 | 257 0512 903 | CK73F1E104ZT | | | |
| | C285-288 | 255 4254 973 | CQ93P2A182JT(NH2) | | | |
| | C289-292 | 257 0512 903 | CK73F1E104ZT | | | |
| | C293,294 | 257 3011 948 | CF73=1H222JT(ECHUB5) | | | |
| | C295-300 | 257 3011 951 | CF73=1H272JT(ECHUB5) | | | |
| | C301-304 | 255 4252 959 | CQ93P2A221JT(NH2) | | | |
| | C305-308 | 257 3014 929 | CF73=1C472JT(ECHUB5) | | | |
| | C309-316 | 257 3011 919 | CF73=1H102JT(ECHUB5) | | | |
| | C317-320 | 257 0509 990 | CK73B1H222KT | | | |
| | C321,322 | 254 4313 950 | CE04W1H101MT(ASF) | | | |
| | C323-330 | 257 0512 903 | CK73F1E104ZT | | | |
| | C331,332 | 254 4313 950 | CE04W1H101MT(ASF) | | | |
| | C337,338 | 255 4254 931 | CQ93P2A122JT(NH2) | | | |
| | C340 | 254 4313 921 | CE04W1H220MT(ASF) | | | |
| | C341,342 | 255 4254 973 | CQ93P2A182JT(NH2) | | | |
| | C343-346 | 257 0512 903 | CK73F1E104ZT | | | |
| | C349 | 254 4558 702 | CE04W1H101MC(RFS) | for E3,E2 | | |
| | C349 | 254 4445 750 | CE04W1H101MC(ARSG) | for JP | | |
| | C351 | 257 3011 919 | CF73=1H102JT(ECHUB5) | | | |
| | C354 | 254 4558 702 | CE04W1H101MC(RFS) | for E3,E2 | | |
| | C354 | 254 4445 750 | CE04W1H101MC(ARSG) | for JP | | |
| | C355 | 254 4347 751 | CE04W1H2R2MC(ARSA) | for E3,E2 | | |
| | C357 | 254 4347 751 | CE04W1H2R2MC(ARSA) | for E3,E2 | | |
| | C359,360 | 255 4256 955 | CQ93P2A103JT(NH2) | | | |
| | C361-364 | 254 4313 950 | CE04W1H101MT(ASF) | | | |
| | C365 | 254 4347 751 | CE04W1H2R2MC(ARSA) | for E3,E2 | | |
| | C367 | 254 4347 751 | CE04W1H2R2MC(ARSA) | for E3,E2 | | |
| | C369,370 | 257 0508 933 | CC73CH1H561JT | for E2 | | |
| | C371-374 | 255 4253 932 | CQ93P2A471JT(NH2) | | | |
| | C375-378 | 257 0509 929 | CK73B1H102KT | | | |
| | C379 | 257 0512 903 | CK73F1E104ZT | | | |
| | C380 | 257 0509 929 | CK73B1H102KT | | | |
| | C381 | 257 0501 901 | CK73B1H103KT (1608) | | | |
| | C382 | 257 0512 903 | CK73F1E104ZT | | | |
| | C383,384 | 257 3011 919 | CF73=1H102JT(ECHUB5) | | | |
| | C388 | 257 0511 904 | CK73F1H103ZT | for E3,JP | | |
| | C389 | 257 0512 903 | CK73F1E104ZT | for E3,JP | | |
| | C392,393 | 254 4615 700 | CE04W1H220MBPC(ARS) | | | |
| | C394-397 | 254 4598 908 | CE04W1H220MTBP(ASF) | | | |
| | C398 | 257 3011 919 | CF73=1H102JT(ECHUB5) | | | |
| | C399 | 254 4445 750 | CE04W1H101MC(ARSG) | for E3,E2 | | |
| | C399 | 254 4644 700 | CE04W1H101MC(RGO) | for JP | | |
| | C401 | 254 4313 921 | CE04W1H220MT(ASF) | | | |
| | C402 | 257 0512 903 | CK73F1E104ZT | | | |

| | Ref. No. | Part No. | Part Name | Remarks | | New |
|---|---|---|---|---|---|---|
| | C403 | 254 4313 921 | CE04W1H220MT(ASF) | | | |
| | C404 | 254 4313 950 | CE04W1H101MT(ASF) | for E3,E2 | | |
| | C404 | 254 4558 702 | CE04W1H101MC(RFS) | for JP | | |
| | C405 | 254 4313 921 | CE04W1H220MT(ASF) | | | |
| | C407 | 254 4313 921 | CE04W1H220MT(ASF) | | | |
| | C409,410 | 254 4313 921 | CE04W1H220MT(ASF) | | | |
| | C421,422 | 254 4558 715 | CE04W1H221MC(RFS) | for E3,E2 | | |
| | C421,422 | 254 4445 035 | CE04W1H221M(ARSG) | for JP | | |
| | **OTHER PARTS GROUP** | | | | | |
| | CX054 | 205 0343 058 | 5P CONN.BASE(KR-PH) | for E2 | | |
| | CY041 | 205 0343 045 | 4P CONN.BASE(KR-PH) | | | |
| | CY271 | 205 1100 083 | 27P FFC BASE (P=1) | | | |
| | FB201-203 | 235 0130 903 | CHIP EMIFIL(11A121) | | | |
| | FB204-208 | 247 2018 903 | RM73B--0R0KT | for E3,JP | | |
| | FB209,210 | 247 2018 903 | RM73B--0R0KT | for E3,JP | | |
| | FB209,210 | 235 0130 903 | CHIP EMIFIL(11A121) | for E2 | | |
| | FB213 | 247 2018 903 | RM73B--0R0KT | | | |
| | FB215 | 247 2018 903 | RM73B--0R0KT | | | |
| | FB217 | 247 2018 903 | RM73B--0R0KT | | | |
| | JK201 | 204 8618 009 | 1P PIN JACK(AU) | | | |
| | JK202 | 204 8668 004 | 8P PIN JACK (AU) | | | * |
| | ST701 | 205 0452 017 | STYLE PIN | | | |
| | T201 | 231 8063 009 | PULSE TRANS | | | |
| | | 203 0469 033 | 1P CONTACT ASS'Y | | | |
| | | 203 0717 002 | 1P SIN-SIN WIRE | | | |
| | | 417 0476 010 | RADIATOR | | | |
| | | 471 3303 016 | 3X6 CBS-Z | | | |

GU-3496 POWER/DISP. UNIT

| | Ref. No. | Part No. | Part Name | Remarks | | New |
|---|---|---|---|---|---|---|
| | **SEMICONDUCTORS GROUP** | | | | | |
| | IC101 | 262 3048 007 | ML9207-01GP | | | |
| | IC103 | 499 0303 004 | GP1UM271XK | | | |
| | IC510 | 262 2580 906 | CXA1511M | | | |
| | IC511 | 262 2114 903 | UPD4721GS-GJG | | | |
| | IC901 | 265 0112 003 | STR-F6674 | | | |
| | IC902 | 262 3047 008 | PC123 Y-22 | | | |
| | IC903 | 263 1113 005 | SE005N | | | |
| | IC904 | 263 1048 002 | BA033T | | | |
| | IC905 | 263 1114 004 | PQ1CG21H2FZ | | | |
| | IC906 | 263 0809 006 | NJM7805FA(S) | | | |
| | IC908 | 263 0554 005 | NJM7905FA | | | |
| | IC909 | 263 0810 008 | NJM7808FA(S) | | | |
| | IC912 | 263 0753 000 | NJM7809FA(S) | | | |
| | IC913 | 263 0878 008 | NJM7909FA | | | |
| | TR101 | 269 0171 907 | IMD3A-T108 | | | |
| | TR102,103 | 269 0082 902 | DTC114EKT96 | | | |
| | TR501 | 269 0171 907 | IMD3A-T108 | | | |
| | TR902 | 269 0082 902 | DTC114EKT96 | | | |
| | TR903 | 272 0093 010 | 2SB1274 (R/S) | | | |
| | TR905 | 269 0083 901 | DTA114EKT96 | | | |
| | TR906 | 269 0082 902 | DTC114EKT96 | | | |
| | TR907 | 275 0106 906 | HAT2053M(TAPE) | | | |
| | TR908,909 | 274 0036 905 | 2SD468(C)TF | | | |
| | TR910,911 | 269 0083 901 | DTA114EKT96 | | | |
| | TR912 | 274 0036 905 | 2SD468(C)TF | | | |
| | D102-104 | 276 0717 903 | 1SS355 TE-17 | | | |
| | D901-904 | 276 0729 904 | EM01AT (V1) | | | |
| | D905 | 276 0730 906 | AG01ZT (V1) | | | |
| | D906 | 276 0724 909 | SARS01T (V1) | | | |
| | D907-909 | 276 0730 906 | AG01ZT (V1) | | | |
| | D910 | 276 0725 704 | RK39 LF-C4 | | | |
| | D911 | 276 0783 005 | FMB-2204 | | | * |
| | D912 | 276 0745 904 | RB411DT146 | | | |
| | D913,914 | 276 0727 906 | AL01ZT (V1) | | | |
| | D915,916 | 276 0717 903 | 1SS355 TE-17 | | | |
| | D917,959 | 276 0737 939 | RB161L-40 | | | |
| | D918 | 276 0717 903 | 1SS355 TE-17 | | | |
| | D923,924 | 276 0717 903 | 1SS355 TE-17 | | | |
| | D957,958 | 276 0717 903 | 1SS355 TE-17 | | | |
| | ZD901 | 276 0457 904 | HZS4C-1TD | | | |
| | LD101 | 393 9623 908 | SEL2810A(TP7) | Amber | | |
| | LD102 | 393 9576 903 | SELU1E10CXM-002 | Blue | | |
| | LD103 | 393 9504 904 | SEL1210S(TP7) | Red | | |
| ⚠ | TH901 | 279 0044 002 | NTH11D8R0LA | | | |
| | **RESISTORS GROUP** | | | | | |
| | R547 | 244 2052 928 | RS14B3A470JNBST(S) | | | |
| | R901 | 244 2675 716 | RS14B3D683JNBF (ERG) | | | |
| | R902 | 244 2671 956 | RS14B3DR47JNBST(S) | | | |
| | R905 | 244 2675 729 | RS14B3D224JNBF (ERG) | | | |
| | R906 | 244 2675 703 | RS14B3D470JNBF (ERG) | | | |
| | R913 | 244 2043 953 | RS14B3A471JNBST(S) | | | |
| | R920 | 241 2423 927 | RD14B2E222JT(PSNB) | | | |

| | Ref. No. | Part No. | Part Name | Remarks | | New |
|---|---|---|---|---|---|---|
| | R932 | 244 2052 999 | RS14B3A103JNBST(S) | | | |
| | R937 | 244 2064 929 | RS14B3A3R3JNBST(S) | | | |
| | **CAPACITORS GROUP** | | | | | |
| | C101,102 | 257 0512 903 | CK73F1E104ZT | | | |
| | C106,107 | 257 0502 971 | CC73CH1H5R0CT | | | |
| | C108,109 | 257 0512 903 | CK73F1E104ZT | | | |
| | C110 | 257 0509 929 | CK73B1H102KT | | | |
| | C111 | 254 4299 964 | CE04W1C470MT(SRE) | | | |
| | C113 | 257 0509 929 | CK73B1H102KT | | | |
| | C114 | 257 0511 904 | CK73F1H103ZT | | | |
| | C115 | 257 0509 929 | CK73B1H102KT | | | |
| | C116,117 | 257 0511 904 | CK73F1H103ZT | | | |
| | C118 | 257 0509 929 | CK73B1H102KT | | | |
| | C119 | 257 0512 903 | CK73F1E104ZT | | | |
| | C120 | 257 0509 929 | CK73B1H102KT | | | |
| ⚠ | C121 | 253 8022 707 | CK45F2EAC103MC | | | |
| | C122 | 257 0509 929 | CK73B1H102KT | | | |
| | C501 | 257 0511 904 | CK73F1H103ZT | | | |
| | C502 | 257 0509 929 | CK73B1H102KT | | | |
| | C505 | 257 0512 903 | CK73F1E104ZT | | | |
| | C509 | 257 0512 903 | CK73F1E104ZT | | | |
| | C510 | 257 0509 929 | CK73B1H102KT | | | |
| | C511 | 257 0511 904 | CK73F1H103ZT | | | |
| | C566 | 257 0506 951 | CC73CH1H101JT | | | |
| | C567 | 257 0501 901 | CK73B1H103KT (1608) | | | |
| | C568 | 254 4538 939 | CE04W1C470MT SMG/RE3 | | | |
| | C569 | 257 0501 901 | CK73B1H103KT (1608) | | | |
| | C570 | 254 4524 943 | CE04W1H010MT SMG/RE3 | | | |
| | C571 | 257 0501 901 | CK73B1H103KT (1608) | | | |
| | C573 | 257 0501 901 | CK73B1H103KT (1608) | | | |
| | C574 | 257 0509 929 | CK73B1H102KT | | | |
| | C575 | 257 0501 901 | CK73B1H103KT (1608) | | | |
| | C576-578 | 254 4524 901 | CE04W1H0R1MT SMG/RE3 | | | |
| | C579 | 254 4313 934 | CE04W1H470MT(ASF) | | | |
| | C580 | 257 0512 903 | CK73F1E104ZT | | | |
| | C581,582 | 254 4524 901 | CE04W1H0R1MT SMG/RE3 | | | |
| | C585,586 | 257 0506 951 | CC73CH1H101JT | | | |
| | C588 | 257 0506 951 | CC73CH1H101JT | | | |
| | C589,590 | 257 0511 917 | CK73F1H223ZT | | | |
| | C593,594 | 257 0511 904 | CK73F1H103ZT | | | |
| ⚠ | C901 | 256 8038 017 | CF99--2EAC224M | | | |
| ⚠ | C902 | 256 8038 004 | CF99--2EAC104M | | | |
| | C905 | 254 4589 713 | CE04W2G101MC(KMG) | for E3,JP | | |
| | C905 | 254 4589 700 | CE04W2G470MC (KMG) | for E2 | | |
| | C906 | 253 4546 711 | CC45SL3D221JC | | | |
| | C907 | 253 4452 902 | CC45SL1H471JT | | | |
| | C908 | 253 9030 963 | CK45=1E103KT | | | |
| | C909 | 254 4313 934 | CE04W1H470MT(ASF) | | | |
| ⚠ | C910 | 253 8029 700 | CK45F2EAC222MC (KX) | | | |
| | C911 | 253 8028 701 | CK45R3A222KC | | | |
| | C912 | 255 1249 923 | CQ93M1H681JT (B) | | | |
| | C913 | 254 4533 921 | CE04W0J101MT SMG/RE3 | for E3,E2 | | |
| | C913 | 254 4313 950 | CE04W1H101MT(ASF) | for JP | | |
| | C914 | 254 4592 700 | CE04W0J222MC K20(LXV | | | |
| | C915 | 254 4593 709 | CE04W1C122MC K20(LXJ | | | |
| | C916 | 254 4591 905 | CE04W1H101MT (KMF) | | | |
| | C917 | 254 4593 709 | CE04W1C122MC K20(LXJ | | | |
| | C918 | 254 4591 905 | CE04W1H101MT (KMF) | | | |
| | C919 | 256 1058 971 | CF93A1H104JT (JL) | | | |
| | C920,950 | 254 4538 955 | CE04W1C221MT SMG/RE3 | for E3,E2 | | |

| | Ref. No. | Part No. | Part Name | Remarks | | New |
|---|---|---|---|---|---|---|
| | C920,950 | 254 4313 798 | CE04W1H221MC (ASF) | for JP | | |
| | C921 | 254 4533 921 | CE04W0J101MT SMG/RE3 | | | |
| | C922,923 | 257 0512 903 | CK73F1E104ZT | | | |
| | C924 | 254 4538 942 | CE04W1C101MT SMG/RE3 | | | |
| | C925 | 254 4313 934 | CE04W1H470MT(ASF) | | | |
| | C926 | 257 0512 903 | CK73F1E104ZT | | | |
| | C927 | 257 0511 904 | CK73F1H103ZT | | | |
| | C928 | 254 4585 908 | CE04W0J471MT(LXV) | | | |
| | C929 | 254 4533 921 | CE04W0J101MT SMG/RE3 | | | |
| | C930-932 | 257 0512 903 | CK73F1E104ZT | | | |
| | C934 | 254 4368 934 | CE04W1E101MT(ASF) | | | |
| | C935 | 257 0512 903 | CK73F1E104ZT | | | |
| | C936 | 254 4538 942 | CE04W1C101MT SMG/RE3 | | | |
| | C937 | 254 4368 934 | CE04W1E101MT(ASF) | | | |
| | C938 | 257 0512 903 | CK73F1E104ZT | | | |
| | C939 | 254 4368 934 | CE04W1E101MT(ASF) | | | |
| | C941 | 257 0511 904 | CK73F1H103ZT | | | |
| | C942-946 | 257 0512 903 | CK73F1E104ZT | | | |
| | C947 | 257 0511 904 | CK73F1H103ZT | | | |
| | C948 | 257 0512 903 | CK73F1E104ZT | | | |
| | C949 | 257 0511 904 | CK73F1H103ZT | | | |
| | C951 | 257 0512 903 | CK73F1E104ZT | | | |
| | C954,955 | 257 0512 903 | CK73F1E104ZT | | | |
| | C958,959 | 254 4382 910 | CE04W1C221MT(ASF) | | | |
| | C964 | 254 4538 942 | CE04W1C101MT SMG/RE3 | for E3,E2 | | |
| | C964 | 254 4313 950 | CE04W1H101MT(ASF) | for JP | | |
| | C983,984 | 257 0512 903 | CK73F1E104ZT | | | |
| | **OTHER PARTS GROUP** | | | | | |
| | CW035 | 203 5312 004 | 3P PH-SAN CON.CORD | | | |
| | CX024 | 205 0581 001 | 2P VH CONNECTOR BASE | | | |
| | CX025 | 205 0581 056 | 2P VH CONNECTOR BASE | | | |
| | CX035 | 205 0355 033 | 3P KR CON BASE(L) | | | |
| | CX041 | 205 0343 045 | 4P CONN.BASE(KR-PH) | | | |
| | CX051 | 205 0343 058 | 5P CONN.BASE(KR-PH) | | | |
| | CX061 | 205 0343 061 | 6P CONN.BASE(KR-PH) | | | |
| | CX121 | 205 0375 026 | 12P CONN.BASE(KR-PH) | | | |
| | CY025 | 205 0581 056 | 2P VH CONNECTOR BASE | | | |
| | CY061 | 205 0343 061 | 6P CONN.BASE(KR-PH) | | | |
| | CY131 | 205 0892 088 | 13P FFC CON. BASE | | | |
| | CY171 | 205 1006 080 | 17P FFC BASE(P=1) | | | |
| ⚠ | F951 | 206 1087 015 | FUSE (ET1A) | for E3,JP | | * |
| ⚠ | F951 | 206 1087 073 | FUSE (ET1.6A) | for E2 | | * |
| | FB519 | 235 0130 903 | CHIP EMIFIL(11A121) | | | |
| | FB527-530 | 235 0130 903 | CHIP EMIFIL(11A121) | | | |
| | FB753-756 | 235 0130 903 | CHIP EMIFIL(11A121) | | | |
| | FF901 | 202 0040 909 | FUSE CLIP (TAPE) | | | |
| | FH901 | 202 0040 909 | FUSE CLIP (TAPE) | | | |
| | FL101 | 393 8060 009 | FL TUBE(17-ST-04GNK) | | | |
| | JK507,508 | 204 8612 005 | MINI JACK | | | |
| | JK509 | 205 1153 001 | 9P S SUB CONNECTOR | | | |
| ⚠ | L901 | 235 0141 002 | LINE FILTER (PLA10A) | | | |

| | Ref. No. | Part No. | Part Name | Remarks | | New |
|---|---|---|---|---|---|---|
| | L902 | 235 0142 917 | COIL LHL08TB4R7MT | | | |
| | L904 | 235 0140 906 | COIL LHL10TB101KT | | | |
| | L907-909 | 235 0142 917 | COIL LHL08TB4R7MT | | | |
| | S101-106 | 212 5604 910 | TACT SWITCH-TA(ALPS) | | | |
| | S107 | 212 0389 007 | ROTARY SW(1-3) | | | |
| | S108-110 | 212 5604 910 | TACT SWITCH-TA(ALPS) | | | |
| ! | S120 | 212 1030 009 | POWER SWITCH (TV-5) | | | |
| | ST901 | 205 0452 017 | STYLE PIN | | | |
| | ST903 | 205 0452 017 | STYLE PIN | | | |
| ⚠ | T901 | 233 6403 007 | SW TRANSFORMER(WIDE) | | | |
| | X101 | 399 0151 008 | X-TAL(4.332MHZ) | | | |
| | | 417 0476 010 | RADIATOR | | | |
| | | 417 0592 004 | HEAT SINK | | | |
| | | 417 0610 009 | HEAT SINK(OSH-2430) | | | |
| | | 461 1125 118 | FL SPACER | | | |
| | | 471 3303 016 | 3X6 CBS-Z | | | |
| | | 471 3305 027 | 3X10 CBS | | | |
| | | 513 3827 003 | FUSE LABEL | for E2 | | |
| | | 001 0101 025 | VINYL WIRE | for E2 | | |

GU-3497 VIDEO UNIT

| | Ref. No. | Part No. | Part Name | Remarks | | New |
|---|---|---|---|---|---|---|
| | **SEMICONDUCTORS GROUP** | | | | | |
| | IC601 | 262 3126 000 | XC2S30-5VQ100C | | | |
| | IC602 | 262 3127 009 | XC17S30AV08C(SQZ) | | | |
| | IC603 | 262 1348 903 | TC74HC123AF(TP1) | | | |
| | IC604 | 262 2519 906 | SN74LV00APW-EL2 | | | |
| | IC605 | 262 1793 901 | TC4W53F | for E2 | | |
| | IC701 | 262 3058 000 | SII504CM208 | | | |
| | IC702 | 262 2916 004 | 64M SDRAM(TSOP) | | | |
| | IC703 | 262 3059 902 | PIC18LC242-I/SO TAPE | | | |
| | IC704 | 262 3050 008 | ADV7300 | | | |
| | IC705 | 262 3093 007 | ADV7190 | for E2 | | |
| | IC706 | 262 3020 902 | BH7860FP-E2 | | | |
| | IC707 | 262 3020 902 | BH7860FP-E2 | for E2 | | |
| | IC708-710 | 263 1082 903 | TK15420MTL | | | |
| | IC711 | 262 1348 903 | TC74HC123AF(TP1) | | | |
| | IC712 | 263 1110 901 | PQ070XZ01ZP | | | |
| | IC713 | 263 1079 903 | BA033FP | | | |
| | IC714 | 262 2977 904 | BA18BC0FP-E2 | | | |
| | IC715 | 263 1079 903 | BA033FP | for E2 | | |
| | TR701,702 | 271 0293 901 | 2SA1022-B | | | |
| | TR703 | 274 0163 904 | 2SD601A | | | |
| | TR704,705 | 272 0125 904 | 2SB709A | | | |
| | TR706 | 274 0163 904 | 2SD601A | | | |
| | TR707,708 | 272 0125 904 | 2SB709A | | | |
| | TR709,710 | 274 0163 904 | 2SD601A | | | |
| | TR711,712 | 271 0293 901 | 2SA1022-B | | | |
| | TR713 | 272 0125 904 | 2SB709A | | | |
| | TR714-716 | 272 0125 904 | 2SB709A | for E2 | | |
| | TR719 | 272 0125 904 | 2SB709A | for JP | | |
| | TR720 | 274 0163 904 | 2SD601A | for JP | | |
| | TR721 | 272 0125 904 | 2SB709A | for JP | | |
| | TR722 | 274 0163 904 | 2SD601A | for JP | | |
| | TR723-725 | 269 0082 902 | DTC114EKT96 | for E2,JP | | |
| | TR726-728 | 269 0083 901 | DTA114EKT96 | for E2,JP | | |
| | D701-703 | 276 0717 903 | 1SS355 TE-17 | | | |
| | **RESISTORS GROUP** | | | | | |
| | RA601-604 | 247 9002 909 | MNR14=330JE0AB | | | |
| | RA701-708 | 247 9002 909 | MNR14=330JE0AB | | | |
| | RA709-712 | 247 9002 909 | MNR14=330JE0AB | for E2 | | |
| | VR701-706 | 211 6148 906 | V03PB471MT(RH03ADCS) | | | |
| | VR708 | 211 6138 903 | V03PB102MT(RH03ADC) | for E2 | | |
| | **CAPACITORS GROUP** | | | | | |
| | C601,602 | 257 0512 903 | CK73F1E104ZT | | | |
| | C603 | 254 4465 905 | CE67C1C220MT | | | |
| | C604-609 | 257 0512 903 | CK73F1E104ZT | | | |
| | C611-613 | 257 0512 903 | CK73F1E104ZT | | | |
| | C614 | 254 4465 905 | CE67C1C220MT | | | |
| | C615-617 | 257 0512 903 | CK73F1E104ZT | | | |
| | C618,619 | 257 0509 929 | CK73B1H102KT | | | |
| | C620,621 | 257 0512 903 | CK73F1E104ZT | | | |
| | C622,623 | 257 0512 903 | CK73F1E104ZT | for E2 | | |
| | C701-707 | 257 0512 903 | CK73F1E104ZT | | | |
| | C708 | 257 0511 904 | CK73F1H103ZT | | | |
| | C709 | 257 0512 903 | CK73F1E104ZT | | | |

| | Ref. No. | Part No. | Part Name | Remarks | | New |
|---|---|---|---|---|---|---|
| | C710 | 254 4465 905 | CE67C1C220MT | | | |
| | C711 | 257 0511 904 | CK73F1H103ZT | | | |
| | C712 | 254 4464 906 | CE67C0J101MT | | | |
| | C713-715 | 257 0512 903 | CK73F1E104ZT | | | |
| | C717-721 | 257 0512 903 | CK73F1E104ZT | | | |
| | C723,724 | 257 0512 903 | CK73F1E104ZT | | | |
| | C725,726 | 254 4464 906 | CE67C0J101MT | | | |
| | C727 | 257 0512 903 | CK73F1E104ZT | | | |
| | C728 | 254 4464 906 | CE67C0J101MT | | | |
| | C729-738 | 257 0512 903 | CK73F1E104ZT | | | |
| | C739 | 254 4464 906 | CE67C0J101MT | | | |
| | C742 | 257 0511 904 | CK73F1H103ZT | | | |
| | C743 | 257 0512 903 | CK73F1E104ZT | | | |
| | C745,746 | 254 4464 906 | CE67C0J101MT | | | |
| | C747,748 | 257 0512 903 | CK73F1E104ZT | | | |
| | C749 | 254 4464 906 | CE67C0J101MT | | | |
| | C750 | 257 0512 903 | CK73F1E104ZT | | | |
| | C752 | 257 0511 904 | CK73F1H103ZT | | | |
| | C753 | 257 0512 903 | CK73F1E104ZT | | | |
| | C755,756 | 257 0512 903 | CK73F1E104ZT | | | |
| | C758 | 257 0509 903 | CK73B1H821KT | | | |
| | C759 | 257 0512 903 | CK73F1E104ZT | | | |
| | C760 | 254 4464 906 | CE67C0J101MT | | | |
| | C761 | 257 0510 921 | CK73B1H392KT | | | |
| | C762 | 257 0502 971 | CC73CH1H5R0CT | | | |
| | C765,766 | 257 0512 903 | CK73F1E104ZT | | | |
| | C768,769 | 257 0512 903 | CK73F1E104ZT | | | |
| | C770-772 | 254 4464 906 | CE67C0J101MT | | | |
| | C775 | 257 0503 925 | CC73CH1H100DT | | | |
| | C776,777 | 257 0512 903 | CK73F1E104ZT | | | |
| | C779,780 | 257 0512 903 | CK73F1E104ZT | | | |
| | C781,782 | 254 4465 905 | CE67C1C220MT | | | |
| | C783 | 254 4572 908 | CE67C1C100MT(MV-B) | | | |
| | C787,788 | 257 0512 903 | CK73F1E104ZT | | | |
| | C790,791 | 257 0512 903 | CK73F1E104ZT | | | |
| | C792,793 | 254 4465 905 | CE67C1C220MT | | | |
| | C794 | 254 4572 908 | CE67C1C100MT(MV-B) | | | |
| | C795,796 | 257 0512 903 | CK73F1E104ZT | | | |
| | C797,798 | 254 4464 906 | CE67C0J101MT | | | |
| | C799,800 | 257 0512 903 | CK73F1E104ZT | | | |
| | C801 | 254 4464 906 | CE67C0J101MT | | | |
| | C802 | 257 0507 934 | CC73CH1H221JT | | | |
| | C803 | 257 0512 903 | CK73F1E104ZT | | | |
| | C804,805 | 257 0509 929 | CK73B1H102KT | | | |
| | C806,807 | 257 0512 903 | CK73F1E104ZT | | | |
| | C808 | 254 4464 906 | CE67C0J101MT | | | |
| | C809,810 | 257 0512 903 | CK73F1E104ZT | for E2 | | |
| | C811,812 | 254 4464 906 | CE67C0J101MT | for E2 | | |
| | C813-815 | 257 0512 903 | CK73F1E104ZT | for E2 | | |
| | C816 | 254 4465 905 | CE67C1C220MT | for E2 | | |
| | C817 | 257 0512 903 | CK73F1E104ZT | for E2 | | |
| | C818 | 254 4465 905 | CE67C1C220MT | for E2 | | |
| | C819 | 257 0512 903 | CK73F1E104ZT | for E2 | | |
| | C820 | 257 0511 904 | CK73F1H103ZT | for E2 | | |
| | C823-827 | 257 0512 903 | CK73F1E104ZT | for E2 | | |
| | C828,829 | 257 0512 903 | CK73F1E104ZT | | | |
| | C830-832 | 257 0512 903 | CK73F1E104ZT | for E2 | | |
| | C833 | 254 4464 906 | CE67C0J101MT | | | |
| | C834 | 257 0501 901 | CK73B1H103KT (1608) | | | |
| | C835 | 254 4465 918 | CE67C1C470MT | | | |
| | C836 | 254 4465 918 | CE67C1C470MT | for E2 | | |

| | Ref. No. | Part No. | Part Name | Remarks | | New |
|---|---|---|---|---|---|---|
| | C837,838 | 257 0511 904 | CK73F1H103ZT | | | |
| | C839 | 254 4464 906 | CE67C0J101MT | | | |
| | C840 | 257 0512 903 | CK73F1E104ZT | | | |
| | C841 | 257 0506 951 | CC73CH1H101JT | | | |
| | C843 | 257 0501 901 | CK73B1H103KT (1608) | | | |
| | C844 | 254 4327 904 | CE04W0J102MT(SMG) | | | |
| | C845 | 254 4464 906 | CE67C0J101MT | | | |
| | C846 | 254 4327 904 | CE04W0J102MT(SMG) | | | |
| | C847 | 254 4464 906 | CE67C0J101MT | | | |
| | C848 | 254 4533 950 | CE04W0J471MT SMG/RE3 | for E2 | | |
| | C850-852 | 254 4465 918 | CE67C1C470MT | for E2 | | |
| | C853,854 | 257 0511 904 | CK73F1H103ZT | for E2 | | |
| | C855 | 254 4464 906 | CE67C0J101MT | for E2 | | |
| | C856 | 257 0512 903 | CK73F1E104ZT | for E2 | | |
| | C857 | 257 0506 951 | CC73CH1H101JT | for E2 | | |
| | C861,862 | 254 4533 950 | CE04W0J471MT SMG/RE3 | for E2 | | |
| | C863 | 257 0512 903 | CK73F1E104ZT | | | |
| | C864 | 257 0511 904 | CK73F1H103ZT | | | |
| | C865 | 257 0509 929 | CK73B1H102KT | | | |
| | C866 | 254 4464 906 | CE67C0J101MT | for E2 | | |
| | C867,868 | 257 0512 903 | CK73F1E104ZT | | | |
| | C869 | 257 0511 904 | CK73F1H103ZT | | | |
| | C870 | 257 0509 929 | CK73B1H102KT | | | |
| | C875-879 | 257 0512 903 | CK73F1E104ZT | | | |
| | **OTHER PARTS GROUP** | | | | | |
| | CY053 | 205 0895 904 | 5P KR-PH CON BASE(T) | | | |
| | CY101 | 205 0884 054 | 10P CON.BASE TUC-P | for E2 | | |
| | CY331 | 205 1170 945 | 33P FFC BASE(FMNBMTT | | | * |
| | JK701 | 204 8670 005 | 1P/S-TERMINAL | | | * |
| | JK702 | 204 8669 003 | 3P PIN JACK | | | * |
| | JK703 | 204 6670 007 | D CONNECTOR | for JP | | |
| | L704,705 | 235 0125 905 | INDUCTOR(FLC32C220K) | | | |
| | L710 | 235 0125 905 | INDUCTOR(FLC32C220K) | | | |
| | L712 | 235 0149 907 | LK1608R68K-T | | | |
| | L713 | 235 0125 905 | INDUCTOR(FLC32C220K) | for E2 | | |
| | L715 | 235 0149 907 | LK1608R68K-T | for E2 | | |
| | LF701 | 261 0161 900 | ELB4B590N | | | |
| | LF702 | 261 0160 901 | ELB4C572 | | | |
| | ST101,102 | 205 0452 017 | STYLE PIN | | | |
| | X702 | 399 0832 903 | CSTCG20MOV51-R0 | | | |

# GU-3343 SCART PWB UNIT

| | Ref. No. | Part No. | Part Name | Remarks | | New |
|---|---|---|---|---|---|---|
| | **SEMICONDUCTORS GROUP** | | | | | |
| | IC851 | 262 1793 901 | TC4W53F | | | |
| | IC852 | 263 1115 906 | NJM2267M (TE2) | | | |
| | IC853 | 262 0707 901 | TC4053BF (TAPE) | | | |
| | IC854 | 262 2534 907 | BA7660FS-E2 | | | |
| | TR851-854 | 269 0082 902 | DTC114EKT96 | | | |
| | TR855 | 269 0083 901 | DTA114EKT96 | | | |
| | **CAPACITORS GROUP** | | | | | |
| | C851,852 | 257 0506 951 | CC73CH1H101JT | | | |
| | C853 | 254 4299 964 | CE04W1C470MT(SRE) | | | |
| | C854,855 | 254 4300 963 | CE04W0J101MT(SRE) | | | |
| | C856-859 | 257 0512 903 | CK73F1E104ZT | | | |
| | C860,861 | 254 4300 963 | CE04W0J101MT(SRE) | | | |
| | C862 | 257 0512 903 | CK73F1E104ZT | | | |
| | C863 | 254 4300 963 | CE04W0J101MT(SRE) | | | |
| | C864,865 | 257 0512 903 | CK73F1E104ZT | | | |
| | C866-868 | 254 4299 964 | CE04W1C470MT(SRE) | | | |
| | C869 | 254 4300 963 | CE04W0J101MT(SRE) | | | |
| | C870 | 254 4299 919 | CE04W1C220MT(SRE) | | | |
| | C871 | 254 4300 963 | CE04W0J101MT(SRE) | | | |
| | C872 | 254 4299 919 | CE04W1C220MT(SRE) | | | |
| | C873 | 254 4300 963 | CE04W0J101MT(SRE) | | | |
| | C874 | 254 4299 919 | CE04W1C220MT(SRE) | | | |
| | C875 | 257 0512 903 | CK73F1E104ZT | | | |
| | C876 | 254 4300 963 | CE04W0J101MT(SRE) | | | |
| | C877,878 | 257 0512 903 | CK73F1E104ZT | | | |
| | C879 | 257 0511 904 | CK73F1H103ZT | | | |
| | C880 | 257 0509 929 | CK73B1H102KT | | | |
| | C884-887 | 247 2018 903 | RM73B--0R0KT | | | |
| | C890-892 | 247 2018 903 | RM73B--0R0KT | | | |
| | C896,897 | 257 0512 903 | CK73F1E104ZT | | | |
| | - | 254 4538 955 | CE04W1C221MT SMG/RE3 | | | |
| | **OTHER PARTS GROUP** | | | | | |
| | CX052 | 205 0395 051 | 5P CONN.BASE(RED)L | | | |
| | CX101 | 205 0885 053 | 10P CON.SOCKET TUC-P | | | |
| | FB851-856 | 235 0130 903 | CHIP EMIFIL(11A121) | | | |
| | JK851 | 204 6649 009 | RGB CONNECTOR | | | |
| | L851 | 235 0070 911 | INDUCTOR(220)ST | | | |
| | W701 | 414 0903 005 | SCART SHIELD PLATE | | | |
| | | 001 0231 005 | 1P WIRE | | | |
| | | 001 0231 018 | 1P WIRE | | | |
| | | 461 0415 007 | RUBBER SHEET | | | |

## EXPLODED VIEW

**Parts List**

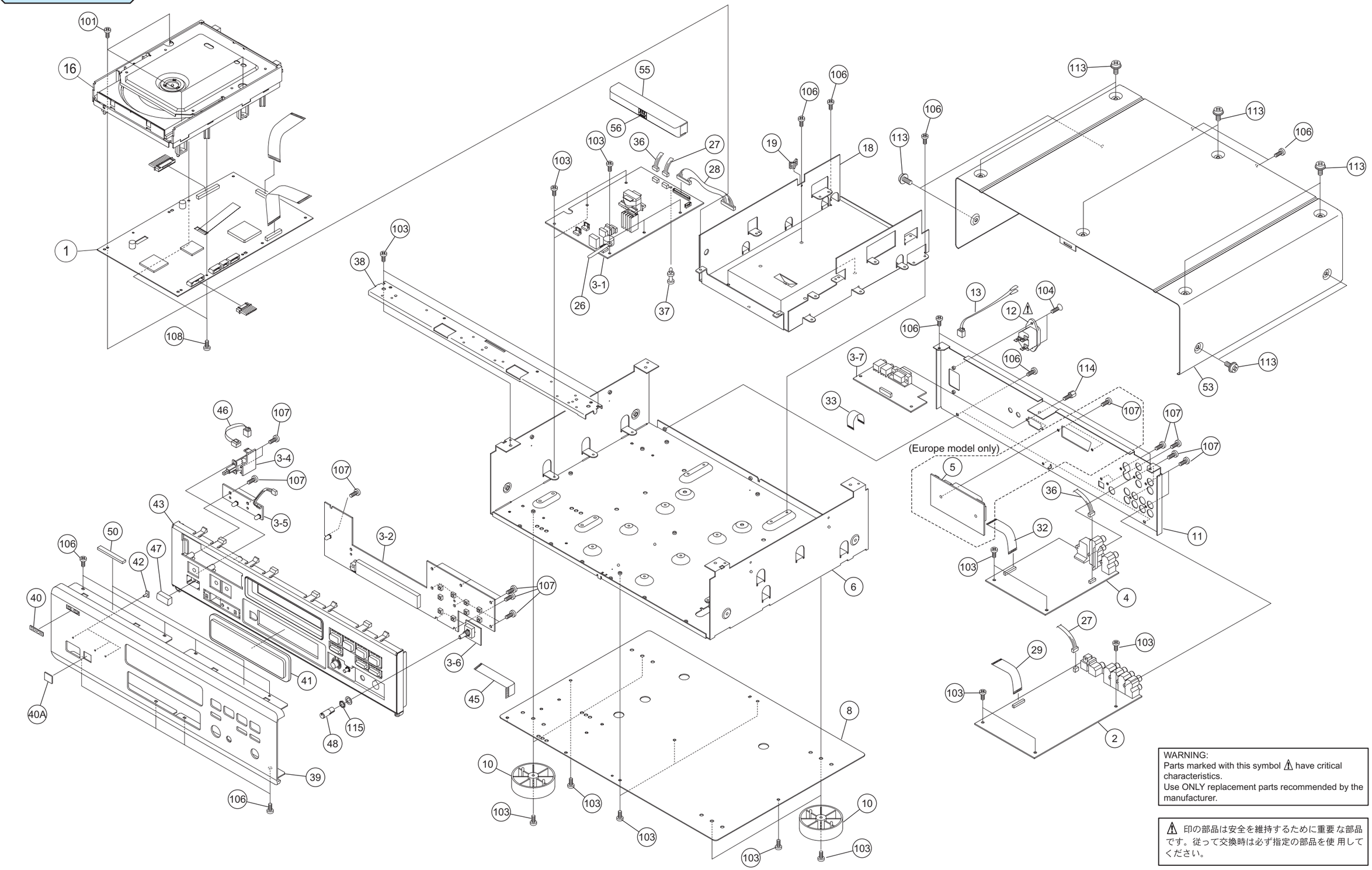


WARNING:
Parts marked with this symbol ⚠ have critical characteristics.
Use ONLY replacement parts recommended by the manufacturer.

⚠ 印の部品は安全を維持するために重要 な部品です。従って交換時は必ず指定の部品を使 用してください。

# PARTS LIST OF EXPLODED VIEW

Note : The symbols in the column "Remarks" indicate the following destinations.
E3 : U.S.A. & Canada model
E2 : Europe model
JP : Japan model

| | Ref. No. | Part No. | Part Name | Remarks | Q'ty | New |
|---|---|---|---|---|---|---|
| | 1 | GU- 3494 | MAIN UNIT | | 1 | * |
| | 2 | GU- 3495 | AUDIO UNIT | for E3 | 1 | * |
| | 2 | GU- 3495 A | AUDIO UNIT | for E2 | 1 | * |
| | 2 | GU- 3495 B | AUDIO UNIT | for JP | 1 | * |
| | 3 | GU- 3496 | POWER/DISP. UNIT | for E3 | 1 | * |
| | 3 | GU- 3496 A | POWER/DISP. UNIT | for E2 | 1 | * |
| | 3 | GU- 3496 B | POWER/DISP. UNIT | for JP | 1 | * |
| | 3-1 | - | POWER UNIT | | | |
| | 3-2 | - | DISPLAY UNIT | | | |
| | 3-4 | - | POWER SW. UNIT | | | |
| | 3-5 | - | LED UNIT | | | |
| | 3-6 | - | SELECT UNIT | | | |
| | 3-7 | - | I/F UNIT | | | |
| | 4 | GU- 3497 | VIDEO UNIT | for E3 | 1 | * |
| | 4 | GU- 3497 A | VIDEO UNIT A (E2) | for E2 | 1 | * |
| | 4 | GU- 3497 B | VIDEO UNIT B (N) | for JP | 1 | * |
| | 5 | GU- 3343 | SCART PWB UNIT | for E2 | 1 | |
| | 6 | 411 1961 102 | CHASSIS | | 1 | |
| | 8 | 105 1402 009 | BOTTOM COVER | | 1 | |
| | 10 | 104 0313 015 | FOOT ASS'Y | for E3,E2 | 4 | |
| | 10 | 104 0173 226 | FOOT ASS'Y | for JP | 4 | |
| | 11 | 105 1424 100 | REAR PANEL | for E3 | 1 | * |
| | 11 | 105 1424 126 | REAR PANEL | for E2 | 1 | * |
| | 11 | 105 1424 139 | REAR PANEL | for JP | 1 | * |
| ⚠ | 12 | 203 3994 000 | AC INLET (3P) | for E3,JP | 1 | |
| ⚠ | 12 | 203 3995 009 | AC INLET (2P) | for E2 | 1 | |
| | 13 | 203 5293 013 | 3P VH CON.CORD | | 1 | |
| ★ | 14 | 342 0032 011 | FERRITE CLAMP(RFC-9) | | 1 | |
| ★ | 15 | 445 0033 005 | WIRE CLAMP BAND | | 1 | |
| | 16 | 337 0118 001 | DVD MECHA(TD-5HP-D3) | | 1 | * |
| | 18 | 411 2026 004 | MECHA FIX BRACKET | | 1 | * |
| | 19 | 445 0099 007 | EDGING (EDS-1208U) | | 1 | |
| | 26 | 445 0048 016 | CORD HOLDER (L50) | | 1 | |
| ★ | 27 | 203 6493 032 | 4P PH-PH CONN.CORD | | 1 | * |
| | 28 | 204 6610 012 | 12P PH-PH CORD | | 1 | * |
| | 29 | 009 0226 069 | 27P FFC (1.0) | | 1 | * |
| | 32 | 009 0226 056 | 33P FFC (1.0) | | 1 | * |
| | 33 | 009 0226 072 | 13P FFC (1.0) | | 1 | * |
| ★ | 34 | 513 3406 107 | LABEL (A) | for E3 | 1 | |
| ★ | 34 | 513 3463 001 | LABEL(LASER) | for E2 | 1 | |
| ★ | 35 | 513 2065 002 | E2 LASER CAUTION | for E2 | 1 | |
| | 36 | 203 8489 015 | 5P PH-PH CON.CORD | | 1 | * |
| | 37 | 412 2814 015 | CARD SPACER (L=14) | | 1 | |
| | 38 | 412 4944 006 | FRONT ANGLE | | 1 | |
| | 39 | 144 2830 109 | FRONT PANEL | for Black model | 1 | * |
| | 39 | 144 2830 112 | FRONT PANEL | for Gold model | 1 | * |
| | 40 | 131 9004 013 | DENON MARK | for Black model | 1 | |
| | 40 | 131 9004 068 | DENON MARK | for Gold model | 1 | |
| | 40A | 135 0068 018 | SACD PLATE | for Black model | 1 | * |
| | 40A | 135 0068 021 | SACD PLATE | for Gold model | 1 | * |
| | 41 | 143 1145 009 | WINDOW | | 1 | |
| | 42 | 143 1110 005 | LENS | | 3 | |
| | 43 | 146 2225 503 | INNER PANEL | for Black model | 1 | * |
| | 43 | 146 2225 516 | INNER PANEL | for Gold model | 1 | * |
| ★ | 43A | 461 1156 006 | INNER PANEL PLATE | | 1 | * |
| ★ | 44 | 204 0572 004 | 6P PH-PH CON.CORD | | 1 | * |
| | 45 | 009 0226 085 | 17P FFC (1.0) | | 1 | * |
| | 46 | 203 5313 003 | 3P VH-VH CON.CORD | | 1 | * |

| | Ref. No. | Part No. | Part Name | Remarks | Q'ty | New |
|---|---|---|---|---|---|---|
| | 47 | 113 1886 008 | P.SW KNOB | for Black model | 1 | |
| | 47 | 113 1886 011 | P.SW KNOB | for Gold model | 1 | |
| | 48 | 112 0855 024 | VOL KNOB(B) | for Black model | 1 | |
| | 48 | 112 0855 037 | VOL KNOB(B) | for Gold model | 1 | |
| | 50 | 129 0253 048 | RUBBER SHEET | | 2 | |
| | 53 | 102 0644 005 | TOP COVER | for Black model | 1 | |
| | 53 | 102 0644 018 | TOP COVER | for Gold model | 1 | |
| | 55 | 146 2309 005 | LOADER PANEL | for Black model | 1 | * |
| | 55 | 146 2309 018 | LOADER PANEL | for Gold model | 1 | * |
| | 56 | 135 0065 008 | DVD A/VIDEO PLATE | for Black model | 1 | |
| | 56 | 135 0065 011 | DVD A/VIDEO PLATE | for Gold model | 1 | |
| ★ | 57 | 513 3747 015 | RATING SHEET | for E3 | 1 | * |
| ★ | 57 | 513 3798 019 | RATING SHEET(E2) | for E2 | 1 | * |
| ★ | 57 | 513 3800 017 | RATING SHEET(DOM) | for JP | 1 | * |
| ★ | 59 | 513 1381 004 | MANUFAC.DATE LABEL | for E3,JP | 1 | |
| | SCREWS | | | | | |
| | 101 | 473 7001 048 | 2.6X8 CBTS (S)-Z | | 4 | |
| | 103 | 473 7002 018 | 3X8 CBTS (S)-Z | | 20 | |
| | 104 | 473 7003 017 | 3X8 CFTS (S)-B | | 2 | |
| | 106 | 473 7015 005 | 3X6 CBTS(S)-B | | 28 | |
| | 107 | 473 7500 044 | 3X8 CBTS (P)-B | for E3,JP | 20 | |
| | 107 | 473 7500 044 | 3X8 CBTS (P)-B | for E2 | 22 | |
| ★ | 110 | 473 7512 003 | 3X8 CFTS (P)-B | for JP | 2 | |
| | 113 | 477 0263 005 | 3P. SWELLING SCREW | for Black model | 10 | |
| | 113 | 477 0263 018 | 3P.SWELLING SCREW | for Gold model | 10 | |
| | 114 | - | SPECIAL SCREW | Attachment for D connector | 2 | |
| | 115 | - | 9 SP NUT | Attachment for Rotary switch | | |

# EXPLODED VIEW OF DVD MECHANISM

**Parts List**

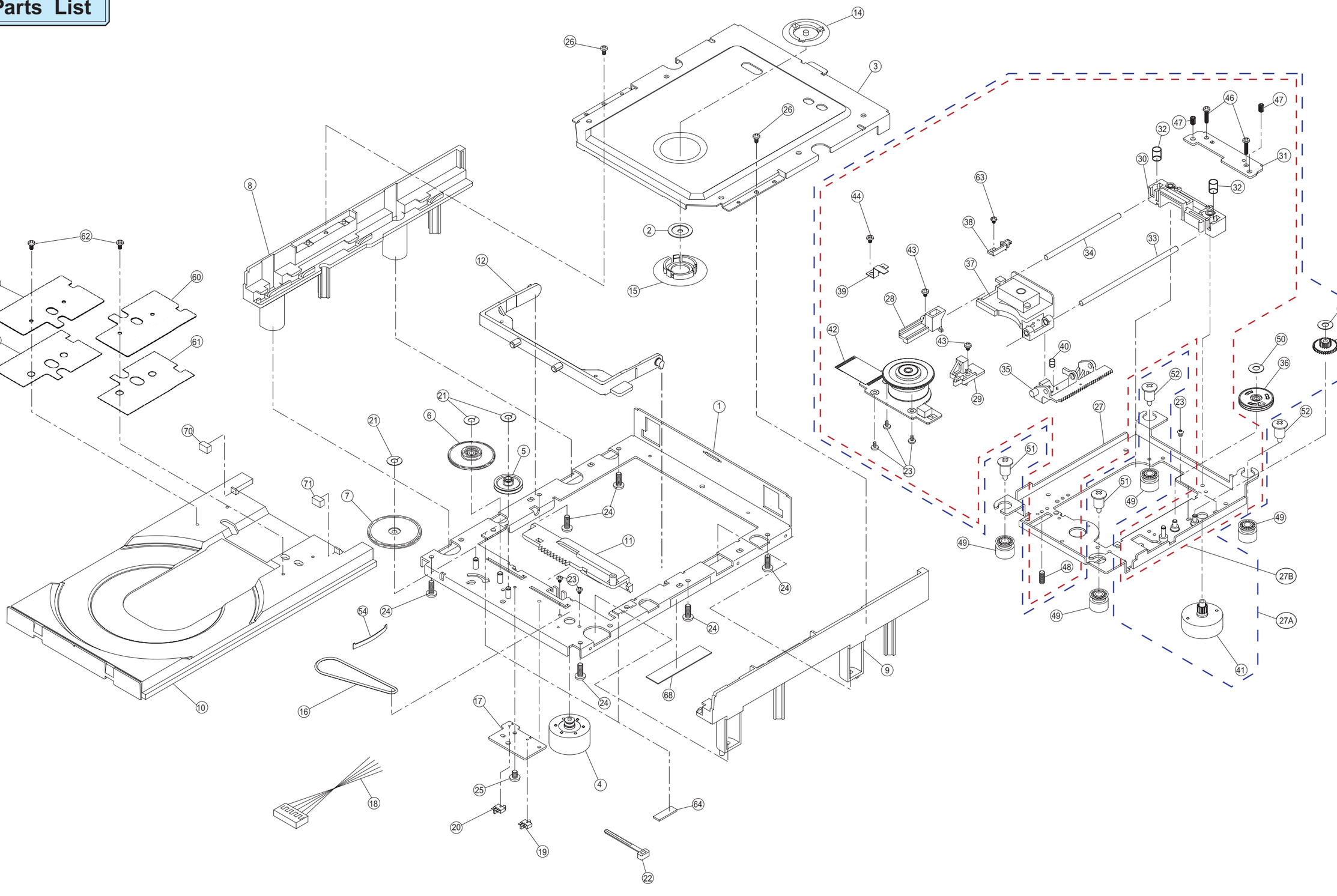

# PARTS LIST OF DVD MECHANISM UNIT

3370118001 DVD MECHA (TD-5HP-D3)

**Note :** The symbols in the column “Remarks” indicate the following destinations.
E3 : U.S.A. & Canada model
E2 : Europe model
JP : Japan model

| Ref. No. | Part No. | Part Name | Remarks | Q'ty | New |
|---|---|---|---|---|---|
| 1 | 9KC 1A01 7 | MAIN CHASSIS ASS'Y | | 1 | |
| 2 | 9KA 7P08 5 | CLAMPER BRACKET | | 1 | |
| 3 | 9KA 2P84 1 | GUIDE CLAMP BRACKET | | 1 | * |
| 4 | 9KC 2A00 3 | LOADING MOTOR ASS'Y | | 1 | |
| 5 | 9KC 2G02 9 | LOADING GEAR | | 1 | |
| 6 | 9KB 9G03 0 | LOADING GEAR 2ND | | 1 | |
| 7 | 9KB 9G03 1 | LOADING GEAR 3RD | | 1 | |
| 8 | 9KA 2G41 7 | SUB CHASSIS-L | | 1 | |
| 9 | 9KA 2G41 8 | SUB CHASSIS-R | | 1 | |
| 10 | 9KA 2G53 2 | TRAY | | 1 | |
| 11 | 9KC 1G00 3 | SLIDE-CAM | | 1 | |
| 12 | 9KC 1G00 4 | TRAVERSE ARM | | 1 | |
| 14 | 9KA 7G20 2 | CLAMPER H | | 1 | |
| 15 | 9KA 7G20 3 | CLAMPER L | | 1 | |
| 16 | 9KB 9G01 5 | LOADING BELT | | 1 | |
| 17 | 9KC 1P01 4 | SWITCH P.W.B. | | 1 | |
| 18 | 9KC 2G04 3 | 5P PH WIRE | | 1 | |
| 19 | 9KS 01W2 04 | SWITCH ESE22MH21 | | 1 | |
| 20 | 9KS 01W2 05 | SWITCH ESE22MH23 | | 1 | |
| 21 | 9KP 26C6 25 | POLY.SLIT WASHER 2.6X6X0.25C | | 3 | |
| 22 | 445 8004 007 | WIRE CLAMPER | | 1 | |
| 23 | 9KS 17N0 22 | PRECISION SCREW 1.7X2.2 TYPE3 | | 2 | |
| 24 | 9KB 26BK 06 | SCREW 2.6X6 CBTS(B)-Z | | 6 | |
| 25 | 9KS 20TK 33 | PRECISION SCREW 2X3(S) TYPE3 | | 1 | |
| 26 | 9KB 20PK 06 | SCREW 2X6 CBTS(P)-Z | | 2 | |
| 27A | 9KC 2A06 3B | TRAVERSE MECHA (FEED) ASS'Y | Assembled part | 1 | |
| 27B | 9KC 2A06 4B | TRAVERSE MECHA ASS'Y | Assembled part | 1 | |
| 23 | - | PRECISION SCREW 1.7X2.2 TYPE3 | | 3 | |
| 27 | - | PU CHASSIS ASS'Y | | 1 | |
| 28 | - | SHAFT HOLDER L | | 1 | |
| 29 | - | SHAFT HOLDER R | | 1 | |
| 30 | - | SHAFT TILT BASE | | 1 | |
| 31 | - | SHAFT TILT PLATE | | 1 | |
| 32 | - | TILT SPRING | | 2 | |
| 33 | - | MAIN SHAFT | | 1 | |
| 34 | - | SUB SHAFT | | 1 | |
| 35 | - | PU RACK GEAR | | 1 | |
| 37 | - | PICK UP HOP-1200R | | 1 | |
| 38 | - | PU SPRING | | 1 | |
| 39 | - | SHAFT SPRING | | 1 | |
| 40 | - | RACK GEAR SPRING | | 1 | |
| 42 | - | T/T MOTOR ASS'Y | | 1 | |
| 43 | - | SCREW 2.6X6 CBTS(S)-Z | | 2 | |
| 44 | - | SCREW 2.6X4 CBTS(S)-Z | | 1 | |
| 46 | - | SCREW 2.6X15 CFTS(S)-Z | | 2 | |
| 47 | - | SCREW 3X4 BSS | | 2 | |
| 48 | - | SCREW 3X8 BSS (A) | | 1 | |
| 63 | - | PRECISION SCREW 1.7X5 TYPE3 | | 1 | |
| 23 | - | PRECISION SCREW 1.7X2.2 TYPE3 | | 2 | |
| 36 | - | FEED GEAR 2ND ASS'Y | | 1 | |
| 41 | - | FEED MOTOR ASS'Y | | 1 | |
| 50 | - | POLY.SLIT WASHER 2.1X4X0.25C | | 2 | |
| 53 | - | FEED GEAR 3RD | | 1 | |
| 49 | 9KC 1G04 3 | DAMPER | | 4 | |

| Ref. No. | Part No. | Part Name | Remarks | Q'ty | New |
|---|---|---|---|---|---|
| 51 | - | SPECIAL SCREW (FRONT) | | 2 | |
| 52 | - | SPECIAL SCREW (REAR) | | 2 | |
| 54 | 9KB 7P02 4 | TRAY-SPRING-VXF | | 1 | |
| 60 | 9KC 2P03 1 | PLATE-RE-2HPC | | 2 | |
| 61 | 9KC 2P03 2 | WF-PLATE-RE-2HPC | | 2 | |
| 62 | 9KS 20P1 04 | PRECISION SCREW 2X4(P) TYPE1 | | 2 | |
| 64 | 9KC 1G04 2 | RUBBER CUSHION | | 2 | |
| 68 | - | TAPE W10X45 (NITTO NO.156) | | 1 | |
| 70 | 9KC 2G07 6 | CUSHION L | 6X3Xt4 | 1 | |
| 71 | 9KC 2G07 7 | CUSHION R | 6X3Xt2 | 1 | |

# POINTS OF GREASING

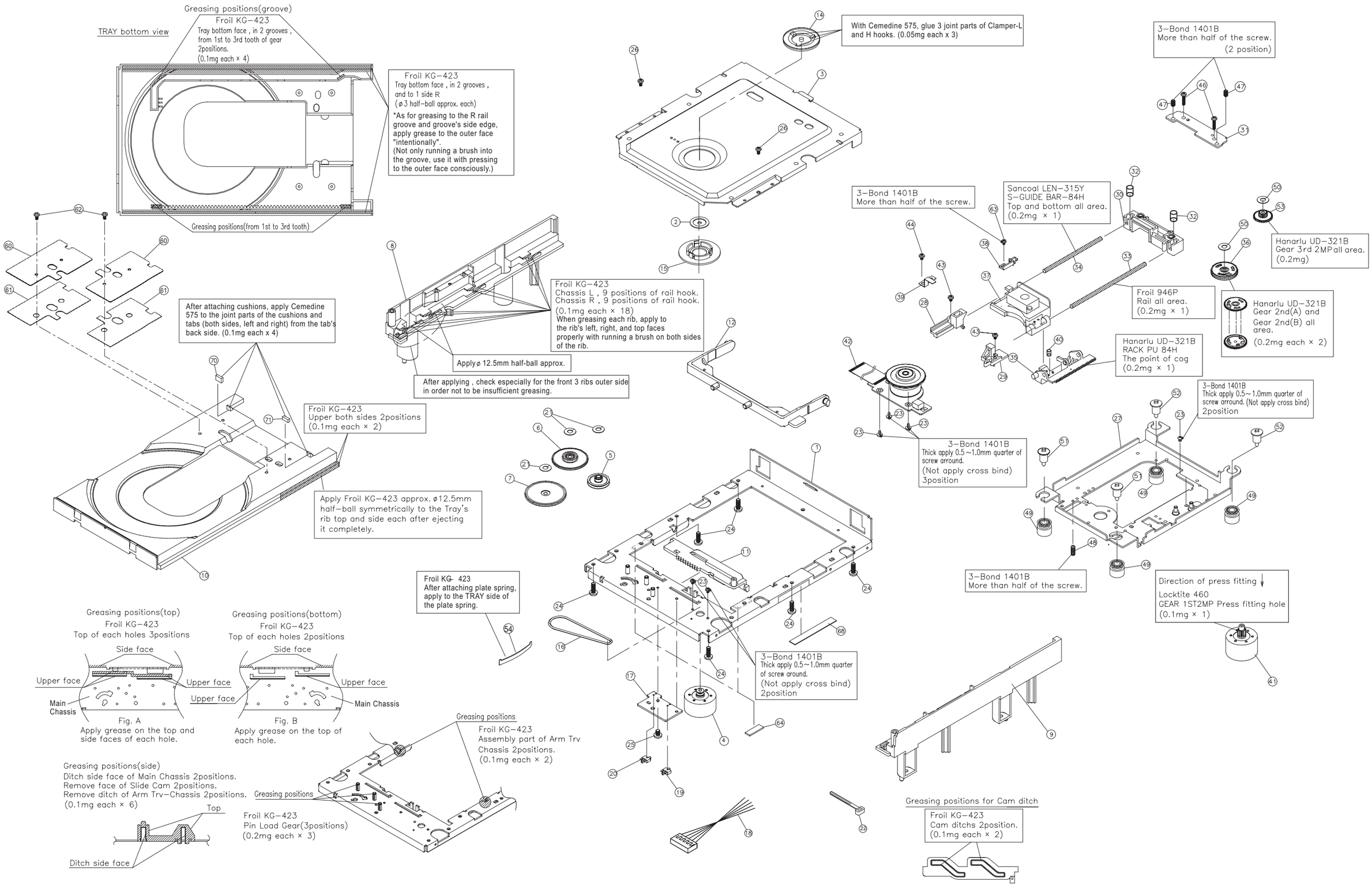

## PACKING VIEW

## 梱包図

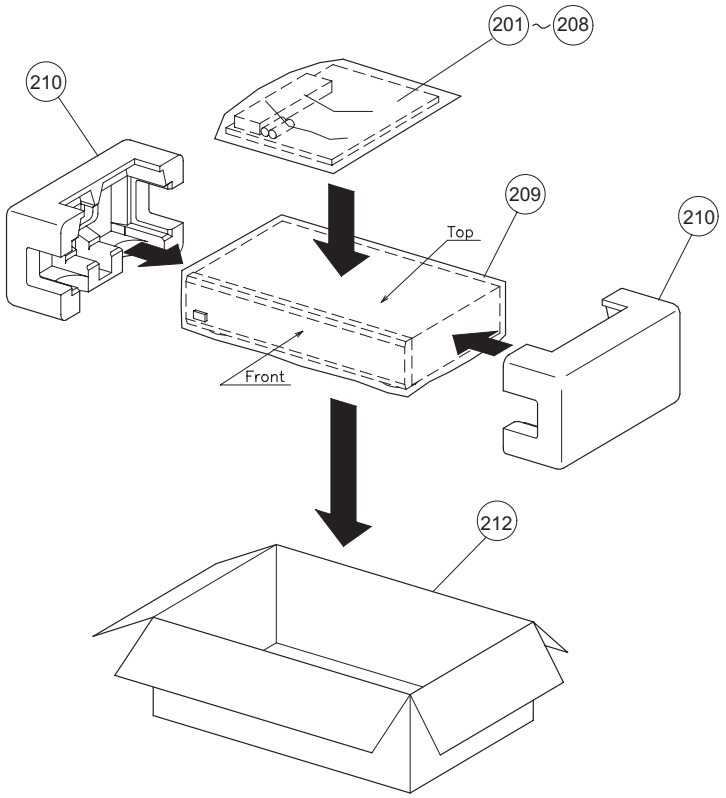


## PARTS LIST OF PACKING & ACCESSORIES

Note : The symbols in the column "Remarks" indicate the following destinations.
E3 : U.S.A. & Canada model
E2 : Europe model
JP : Japan model

| | Ref. No. | Part No. | Part Name | Remarks | Q'ty | New |
|---|---|---|---|---|---|---|
| | 201 | 505 0038 043 | POLY COVER | | 1 | |
| | 202 | 511 3994 008 | INST. MANUAL | for E3 | 1 | * |
| | 202 | 511 4008 003 | INST. MANUAL(8) | for E2 | 1 | * |
| | 202 | 511 4007 004 | INST. MANUAL(DOM) | for JP | 1 | * |
| | 204 | 515 0921 209 | S.S.LIST(EX) | for E3,E2 | 1 | |
| | 204 | 515 0918 005 | SERVICE STATION LIST | for JP | 1 | |
| ⚠ | 205 | 206 2202 006 | AC CORD SET (E3) | for E3 | 1 | |
| ⚠ | 205 | 206 2203 005 | AC CORD SET (E2) | for E2 | 1 | |
| ⚠ | 205 | 206 2213 008 | AC CORD SET | for JP | 1 | |
| | 206 | 203 5224 008 | 3P PIN CORD | | 1 | |
| | 207 | 399 0860 001 | REMOTE CONTROLLER RC-934 | | 1 | * |
| | 208 | - | BATTERY(UM-3)ASS'Y | | 1 | |
| | 209 | 505 0312 028 | CABINET COVER | | 1 | |
| | 210 | 503 1444 009 | CUSHION | | 2 | |
| | 212 | 501 2172 031 | CARTON CASE | for E3,E2 | 1 | * |
| | 212 | 501 2172 044 | CARTON CASE | for JP | 1 | * |
| ★ | 213 | - | CONT.CARD(L)SUB ASS'Y | for E3,E2 | 1 | |
| ★ | 214 | - | UPC LABEL | for E3 | 1 | * |
| ★ | 214 | - | E2 POS LABEL | for E2 Black model | 1 | * |
| ★ | 214 | - | E2 POS LABEL | for E2 Gold model | 1 | * |
| ★ | 214 | 517 1477 004 | POS LABEL | for JP | 1 | * |
| ★ | 215 | 513 3579 005 | REGION LABEL(NO.1) | for E3 | 2 | |
| ★ | 215 | 513 3579 018 | REGION LABEL(NO.2) | for E2,JP | 2 | |
| ★ | 217 | 513 9111 001 | COLOR LABEL (GOLD) | for E2 Gold model | 2 | |
| ★ | 219 | 515 0944 008 | WARRANTY (HOME) | for E3 | 1 | |
| ★ | 219 | 515 0919 004 | GUARANTEE CARD(S) | for JP | 1 | |

## WIRING DIAGRAM

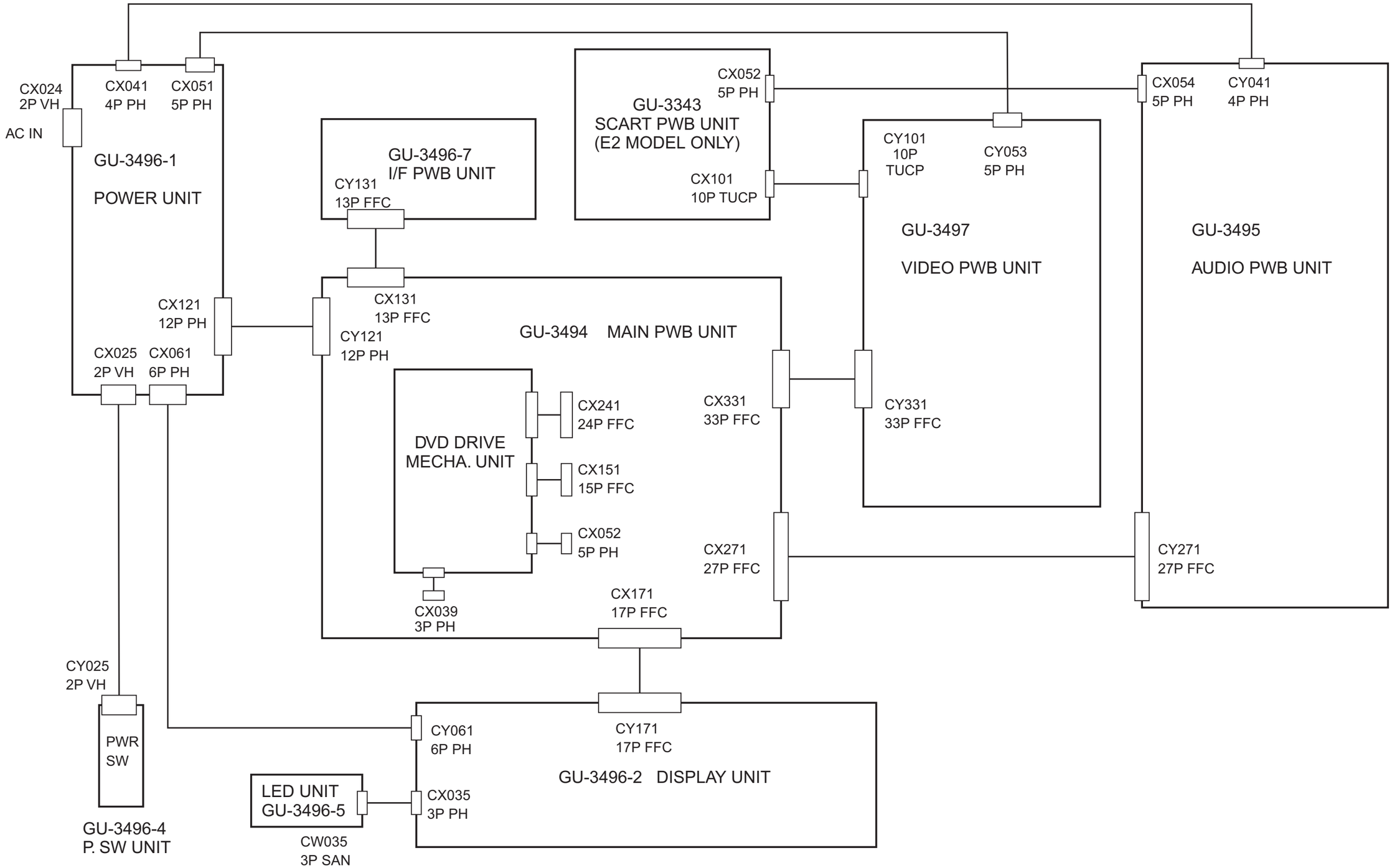

## MEASURING METHOD AND WAVEFORMS

To check the waveforms on the Main P.W.B., the GND (–) probe of the oscilloscope to “Vref” point.

NOTES

Measuring Disc: DVD/DVDT-S01 or TDV-520A
CD/TCD-784

(It is better to use wires for extending between the probe and test points.)

- When watching the HF waveform, use the extending wire as short as possible.
- When HF waveform is noisy or cannot discriminate the eye-pattern, replace the Traverse Unit after measuring the lop.
- ① ~ ⑰ points have the certain test points shown below.

## 各部の波形と測定方法

メイン基板の波形チェックを行うためにはオシロスコープの GND(–) プローブを "Vref" ポイントに接続します。

注　意

測定ディスク： DVD/DVDT-S01 or TDV-520A
CD/TCD-784

（テストポイントとプローブ間に延長ワイヤを使用するのがより良い方法です。）

- ＨＦ 波形を観測する場合、できるだけ短い延長ワイヤを使用してください。
- ＨＦ 波形がノイズで不明瞭、またはアイパターンが識別不能の場合は lop 測定後にトラバースユニットを交換してください。
- ポイント①～⑰は、下図のように特定テストポイント付きです。

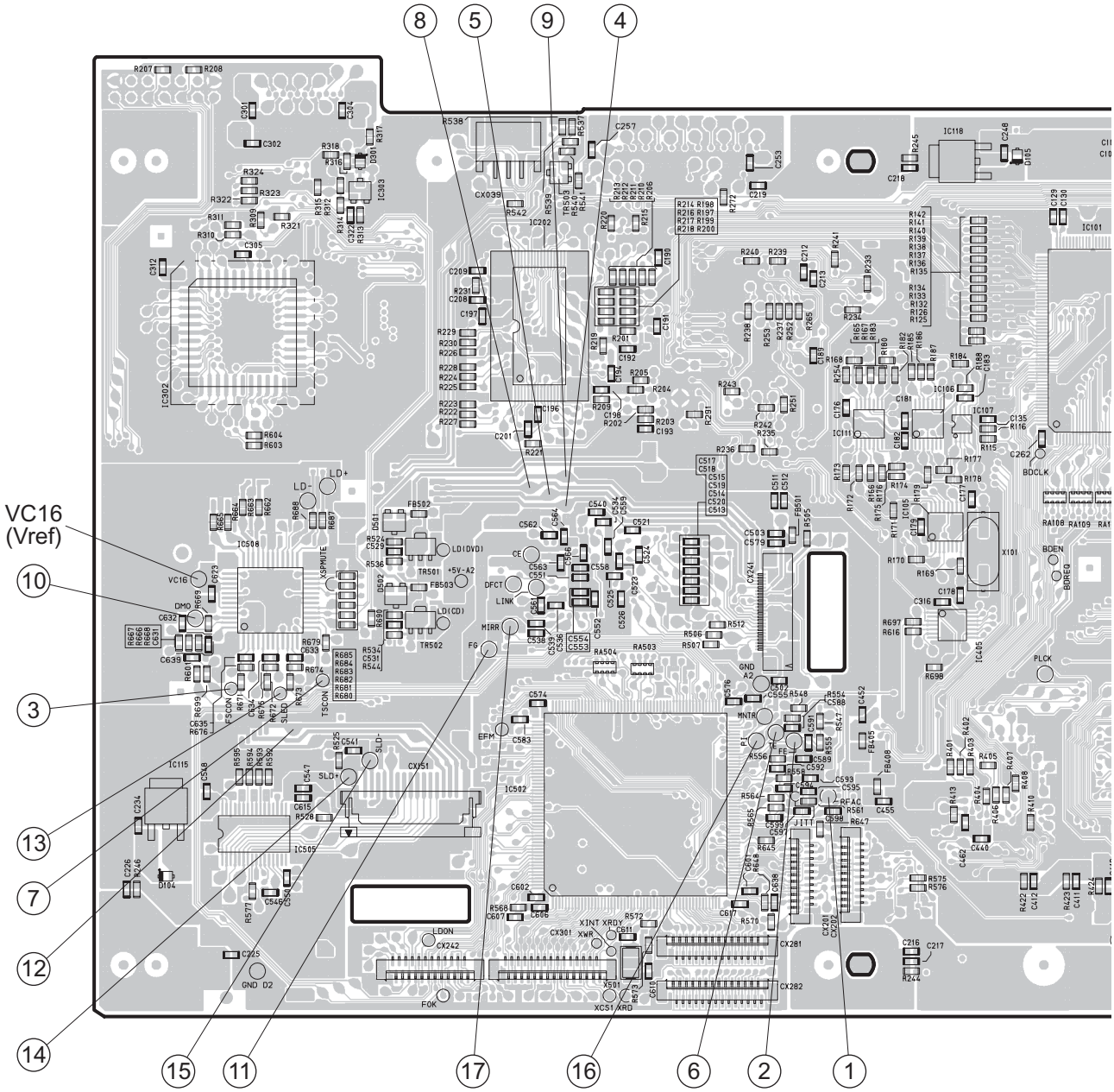


GU-3494 Main P.W.B. Unit Foil Side

## WAVEFORMS

### ● GU-3494 MAIN P.W.B.

DVD PLAY Disc: TDV-520A

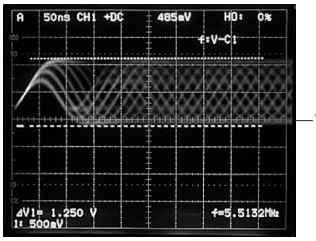


CD PLAY

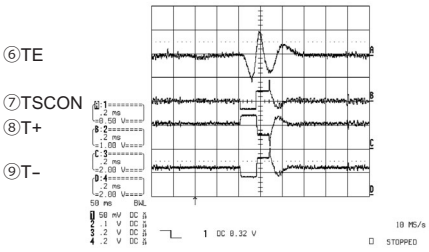


DISC DETECT (CD)

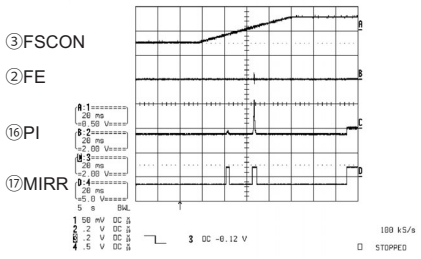


CD PLAY Disc: TCD-784

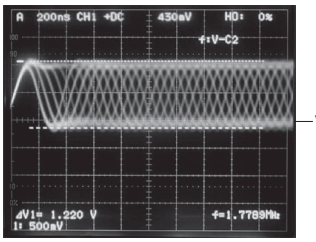


DVD PLAY (INNER)

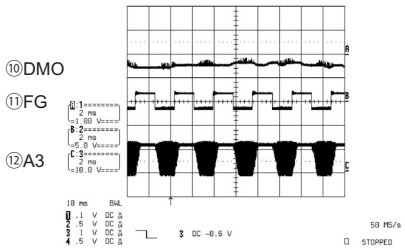


DVD LOADING ⟶ PLAY

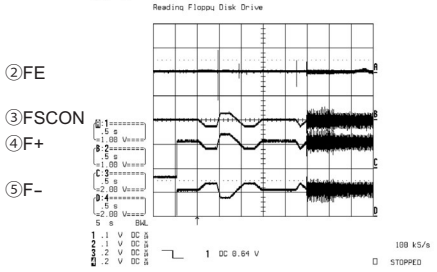


CD PLAY (INNER)

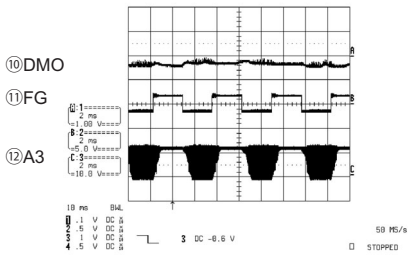


CD LOADING ⟶ PLAY

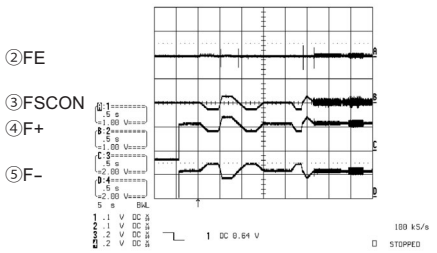


SEARCH TO OUTER CHAPTER (INNER⟶ OUTER)

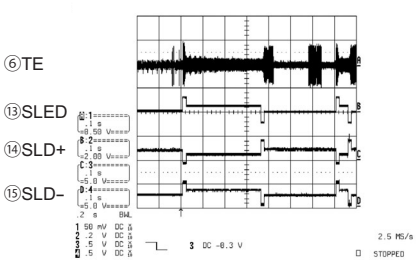


DVD PLAY

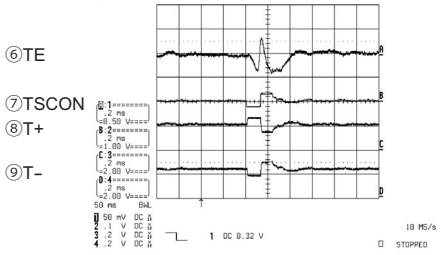


DISC DETECT (DVD)

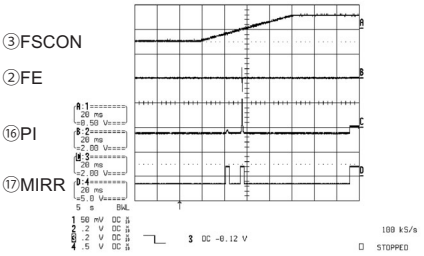

## ● GU-3496-1 POWER P.W.B.

A

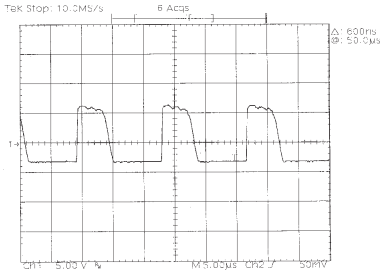

B

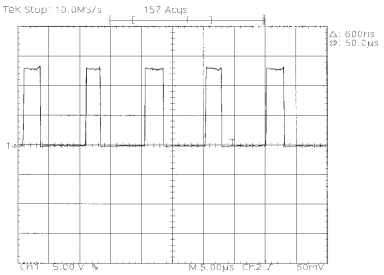

C

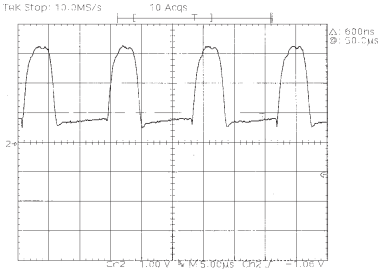

D

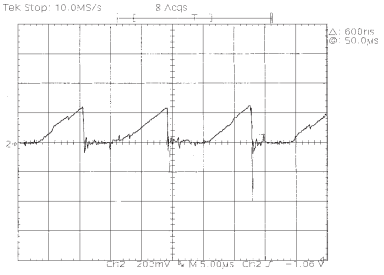

E

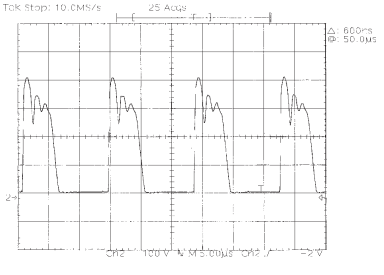

## ● GU-3497 VIDEO P.W.B.

V1

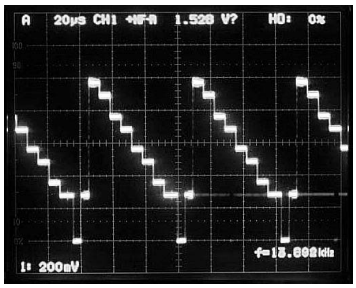


V2

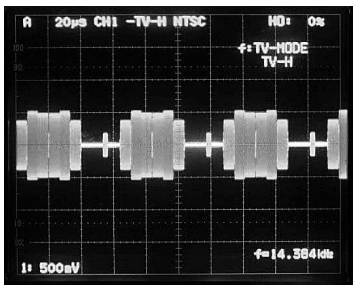


V3

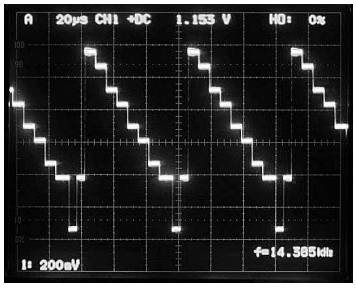


V4

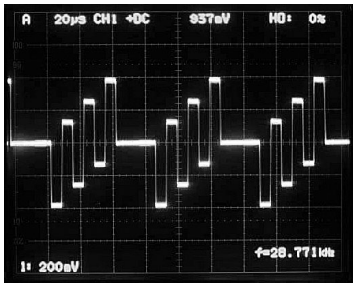


V5

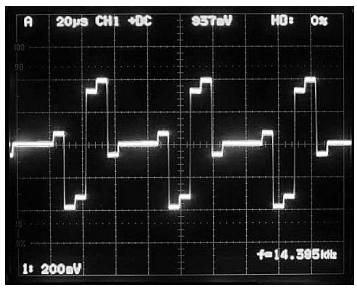


V6

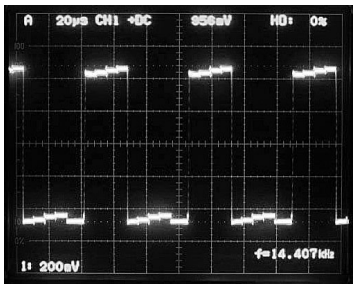


V7

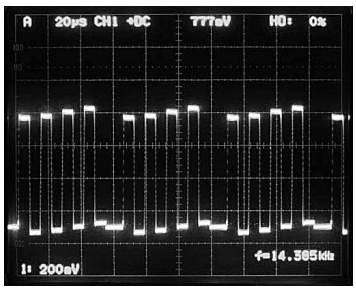


V8

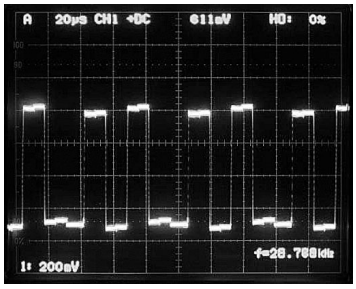

## NOTE FOR SCHEMATIC DIAGRAM

WARNING:
Parts marked with this symbol ⚠ have critical characteristics.
Use ONLY replacement parts recommended by the manufacturer.

CAUTION:
Before returning the unit to the customer, make sure you make either (1) a leakage current check or (2) a line to chassis resistance check. If the leakage current exceeds 0.5 milliamps, or if the resistance from chassis to either side of the power cord is less than 460 kohms, the unit is defective.

WARNING:
DO NOT return the unit to the customer until the problem is located and corrected.

NOTICE:
ALL RESISTANCE VALUES IN OHM. k=1,000 OHM
M=1,000,000 OHM
ALL CAPACITANCE VALUES IN MICRO FARAD.
P=MICRO-MICRO FARAD
EACH VOLTAGE AND CURRENT ARE MEASURED AT NO SIGNAL INPUT CONDITION.
CIRCUIT AND PARTS ARE SUBJECT TO CHANGE WITHOUT PRIOR NOTICE.

## 配線図について

⚠印の部品は安全を維持するために重要な部品です。
従って交換時は必ず指定の部品を使用してください。

注）
(1) 指定なき抵抗値は Ω、k は kΩ、M は MΩ を示す。
(2) 指定なきコンデンサーの値は μF、p は pF を示す。
(3) 各部の電圧は無信号の値を示す。
(4) この配線図は基本配線図です。改良等のため変更することがありますのでご了承ください。

# SCHEMATIC DIAGRAMS (1/9)

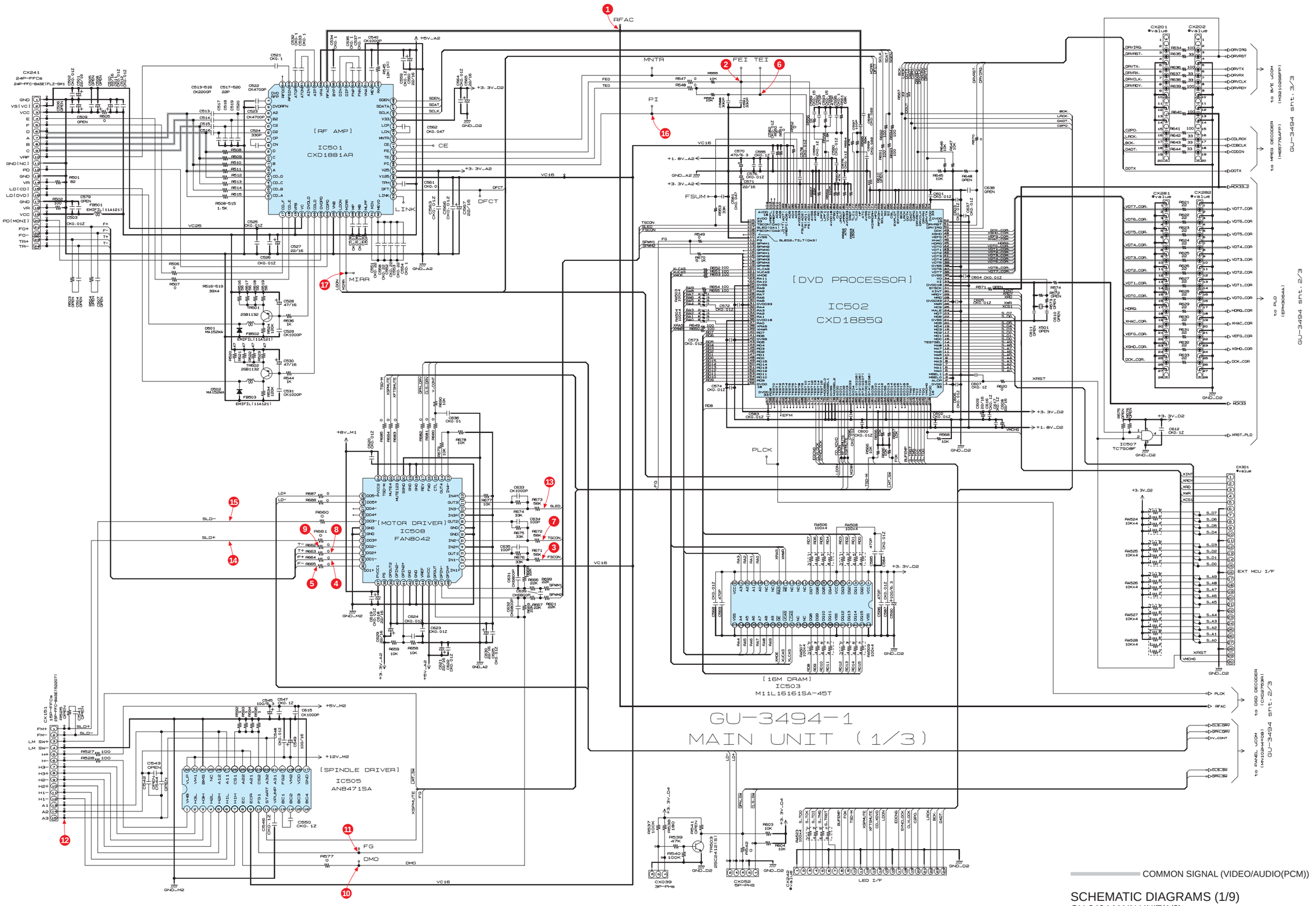


## SCHEMATIC DIAGRAMS (1/9)

GU-3494 MAIN UNIT(1/3)

## SCHEMATIC DIAGRAMS (2/9)

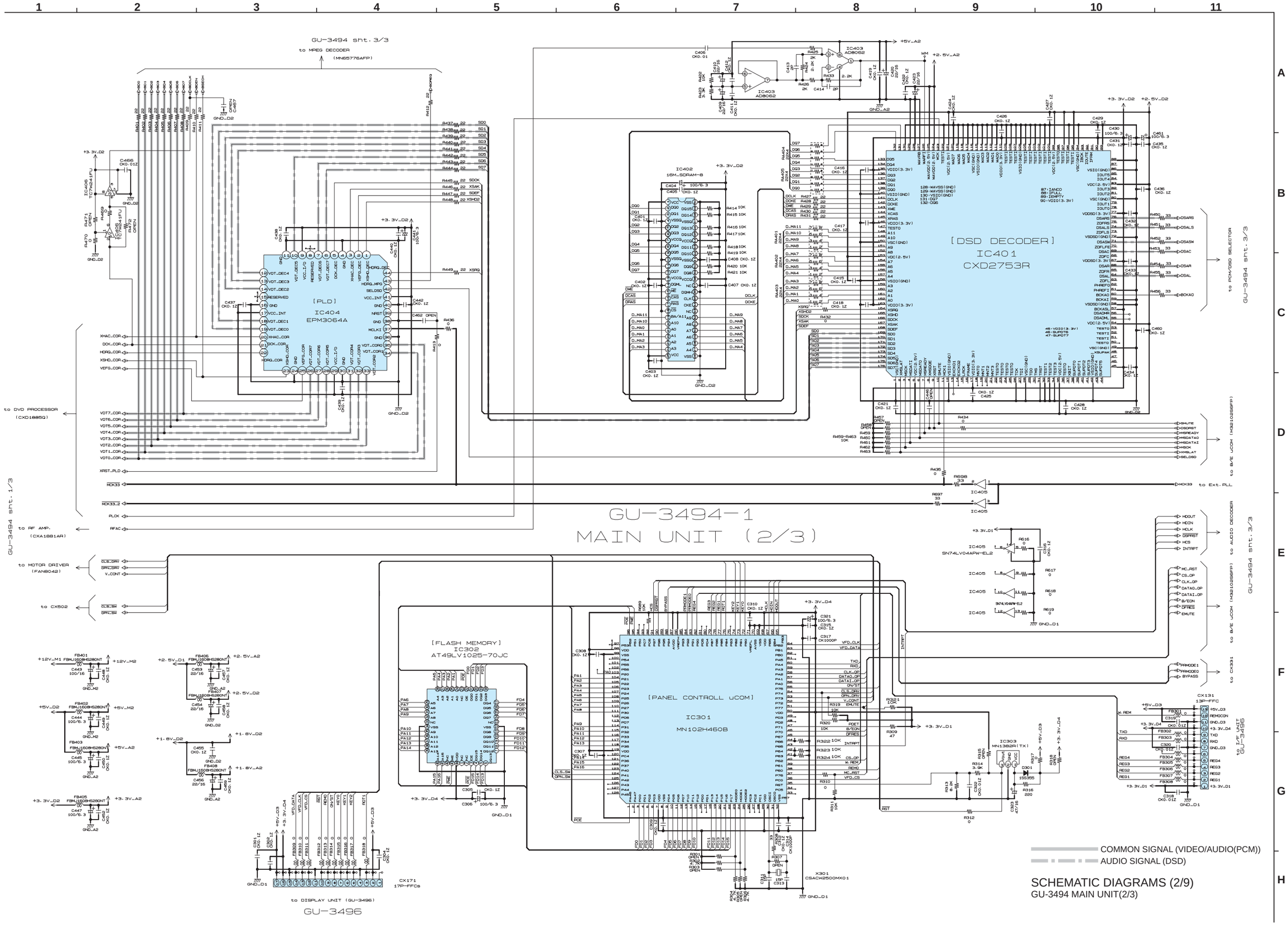


SCHEMATIC DIAGRAMS (2/9)
GU-3494 MAIN UNIT(2/3)

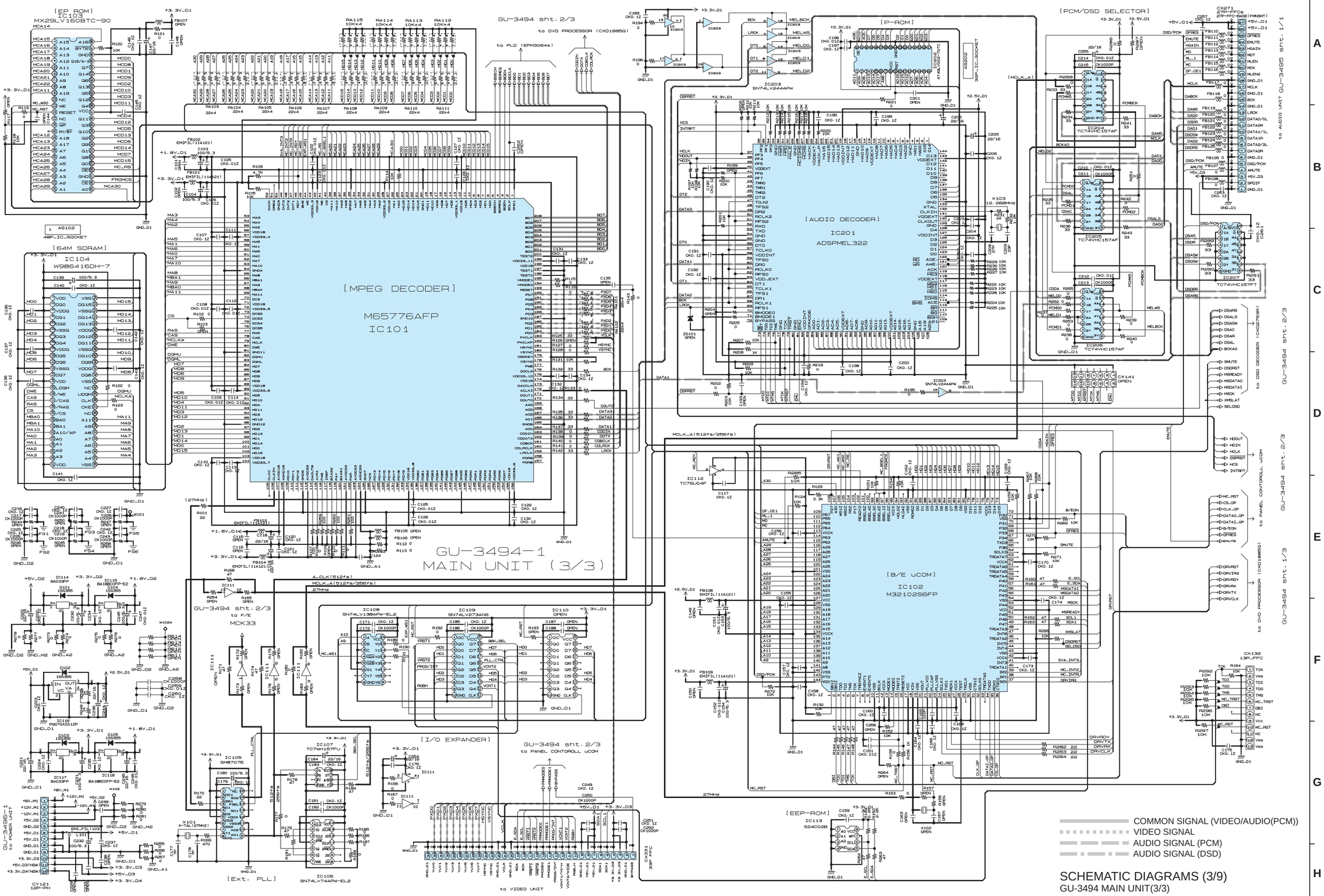
[EP ROM]
IC103
MX29LV160BTC-90
[64M SDRAM]
IC104
W9864160DH-7
[MPEG DECODER]
M65776AFP
IC101
GU-3494 sht.2/3
to DVD PROCESSOR (CXD1885Q)
to PLD (EPM3064A)
GU-3494-1
MAIN UNIT (3/3)
[P-ROM]
IC203
SN74LV2444APW
[PCM/DSD SELECTOR]
IC204
TC74VHC157AF
IC205
TC74VHC157AF
IC206
TC74VHC157AF
IC207
TC74VHC157FT
[AUDIO DECODER]
IC201
ADSPMEL322
X103
12.288MHz
[B/E uCOM]
IC102
M32102S6FP
[I/O EXPANDER]
IC112
TC7SU04F
IC113
S24C02B
[EEP-ROM]
IC105
SM8707E
[Ext. PLL]
IC106
SN74LV74APW-EL2
IC107
TC7W157FU
IC108
SN74LV138APW-EL2
IC109
SN74LV273ANS
IC110
OPEN
GU-3494 sht.2/3
to PANEL CONTOROLL uCOM
GU-3494 sht.2/3
to F/E
MCK33
GU-3494 sht.2/3
to AUDIO UNIT GU-3495 sht.1/1
GU-3494 sht.2/3
to PANEL CONTOROLL uCOM
GU-3494 sht.1/3
to DVD PROCESSOR (CXD1885Q)
GU-3494 sht.2/3
to DSD DECODER (CXA2755R)
GU-3494 sht.1/3
to VIDEO UNIT
GU-3497 sht.1/2
GU-3495-1
to POWER UNIT
AS102
48P_IC_SOCKET
AS202
38P_IC_SOCKET
CX271
27P-FFC8
27P-FFC-BASE(FNNBMT)
CX132
13P_FFC
CX141
OPEN
CY121
12P-PH
COMMON SIGNAL (VIDEO/AUDIO(PCM))
VIDEO SIGNAL
AUDIO SIGNAL (PCM)
AUDIO SIGNAL (DSD)
SCHEMATIC DIAGRAMS (3/9)
GU-3494 MAIN UNIT(3/3)

1 2 3 4 5 6 7 8 9 10 11

A B C D E F G H

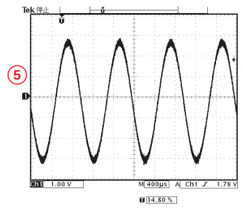


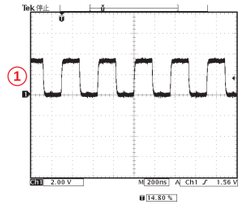


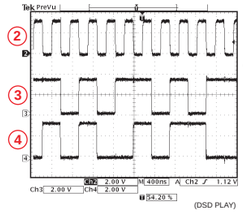


GU-3495-1
AUDIO UNIT

AUDIO SIGNAL (PCM)

SCHEMATIC DIAGRAMS (4/9)
GU-3495 AUDIO UNIT

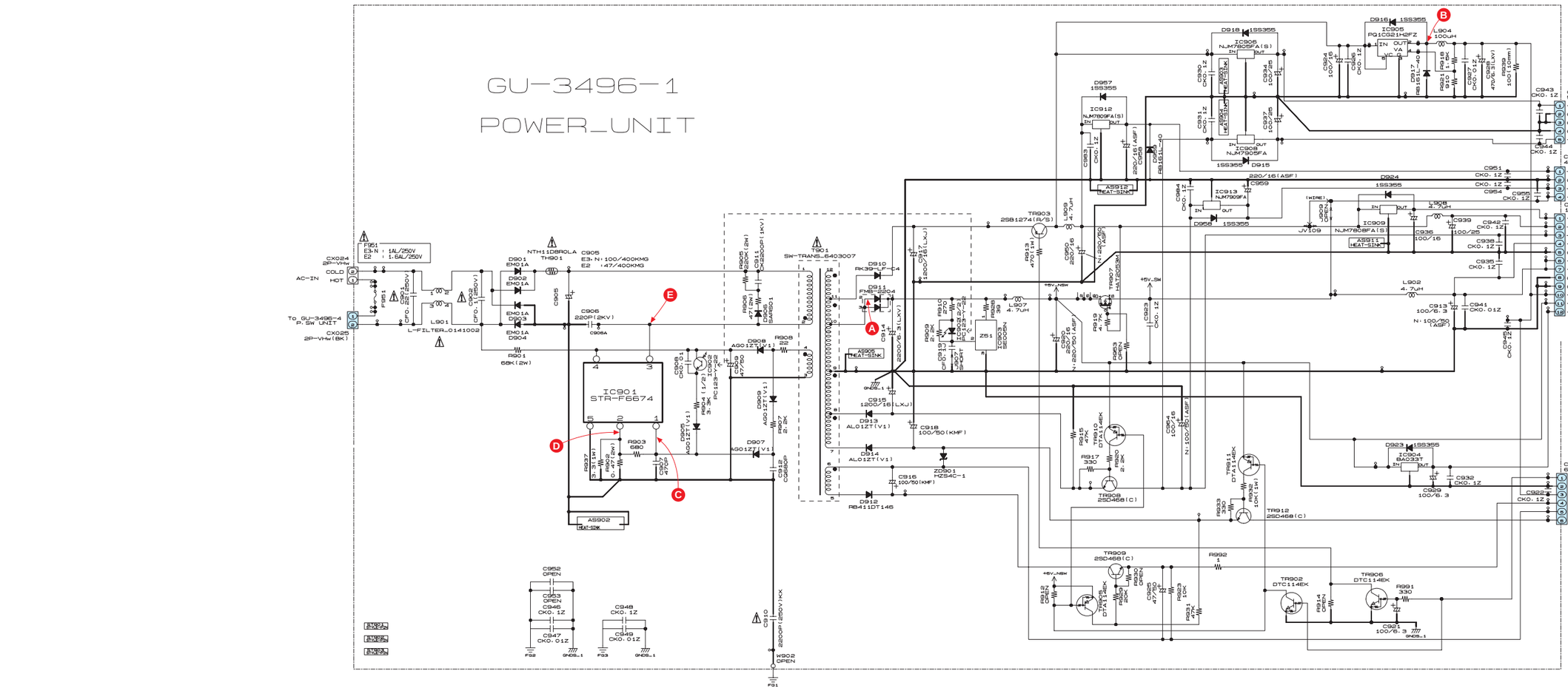


| | R580 | R581 | R582 | R583 | R584 | R585 | R586 | R587 |
|---|---|---|---|---|---|---|---|---|
| E3 | 47K | OPEN | OPEN | OPEN | OPEN | 47K | 47K | 47K |
| -N | 47K | OPEN | 47K | 47K | OPEN | 47K | OPEN | OPEN |
| E2 | OPEN | OPEN | 47K | 47K | 47K | 47K | OPEN | OPEN |
| E1 | OPEN | 47K | 47K | 47K | 47K | OPEN | OPEN | OPEN |
| E4 | 47K | 47K | 47K | OPEN | OPEN | OPEN | OPEN | 47K |
| G1C | 47K | OPEN | OPEN | 47K | OPEN | 47K | 47K | OPEN |

SCHEMATIC DIAGRAMS (5/9)
GU-3496-1 POWER UNIT
GU-3496-7 I/F UNIT

## SCHEMATIC DIAGRAMS (6/9)

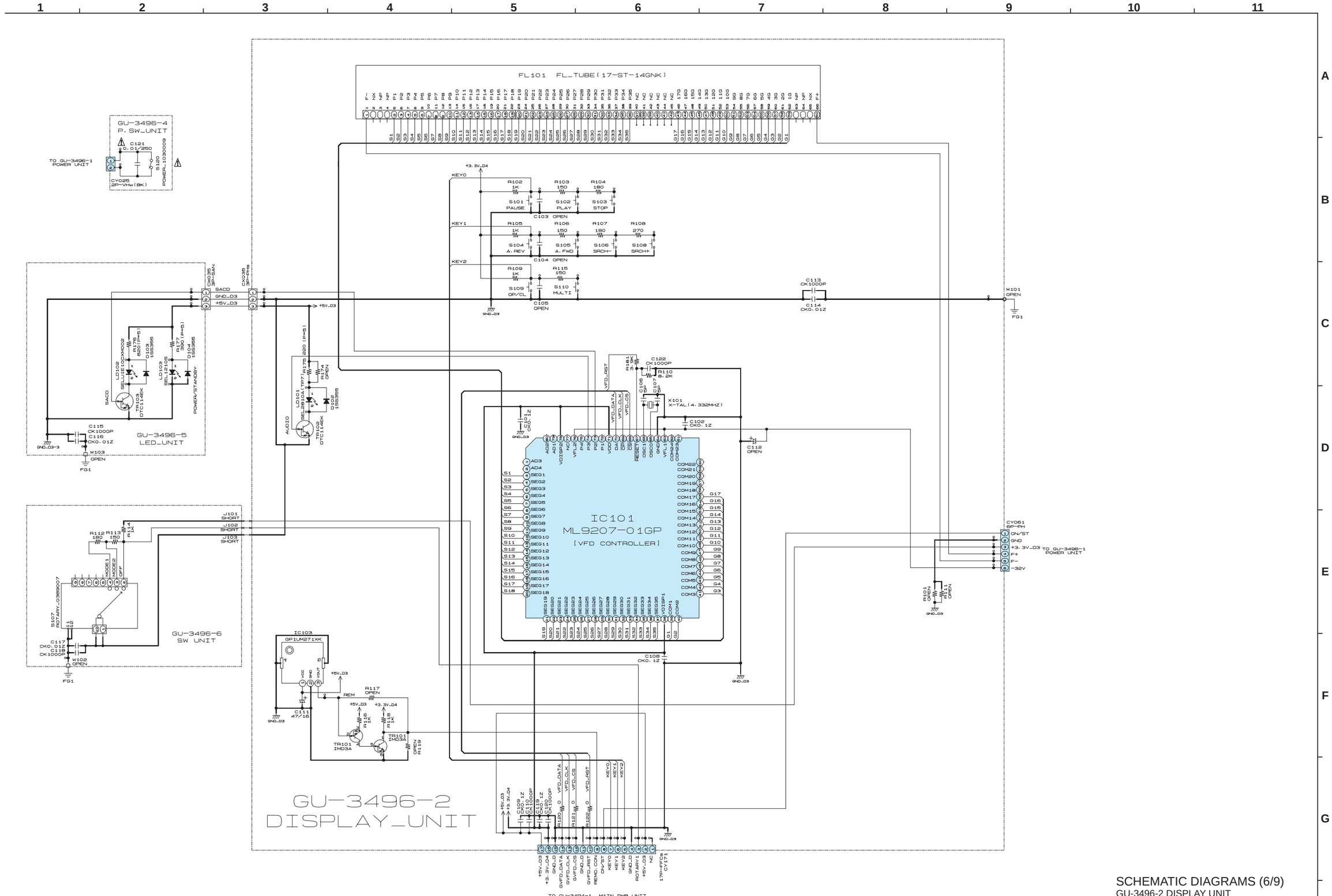


SCHEMATIC DIAGRAMS (6/9)
GU-3496-2 DISPLAY UNIT
GU-3496-4 P. SW UNIT
GU-3496-5 LED UNIT
GU-3496-6 SW UNIT

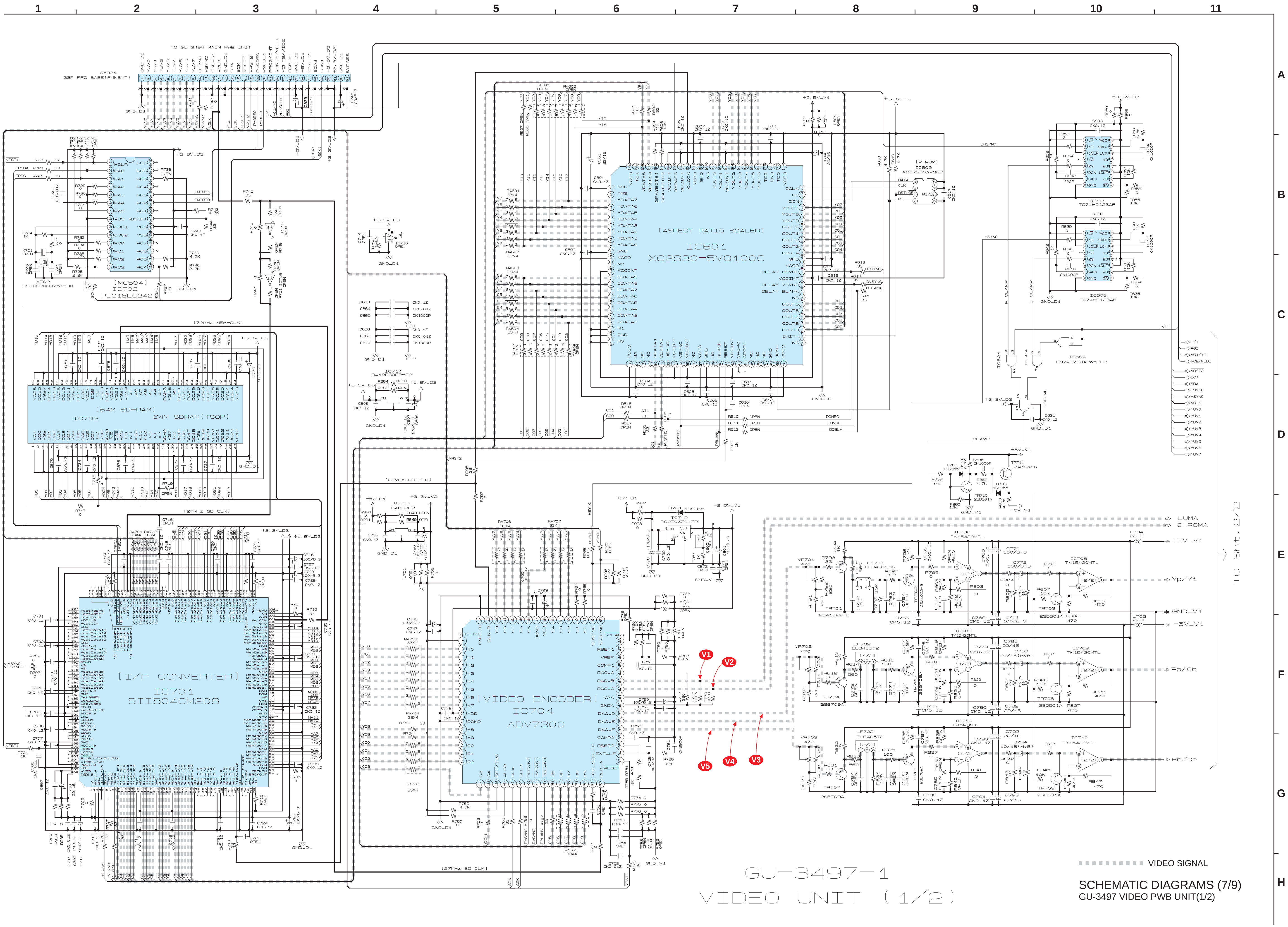


SCHEMATIC DIAGRAMS (7/9)
GU-3497 VIDEO PWB UNIT(1/2)

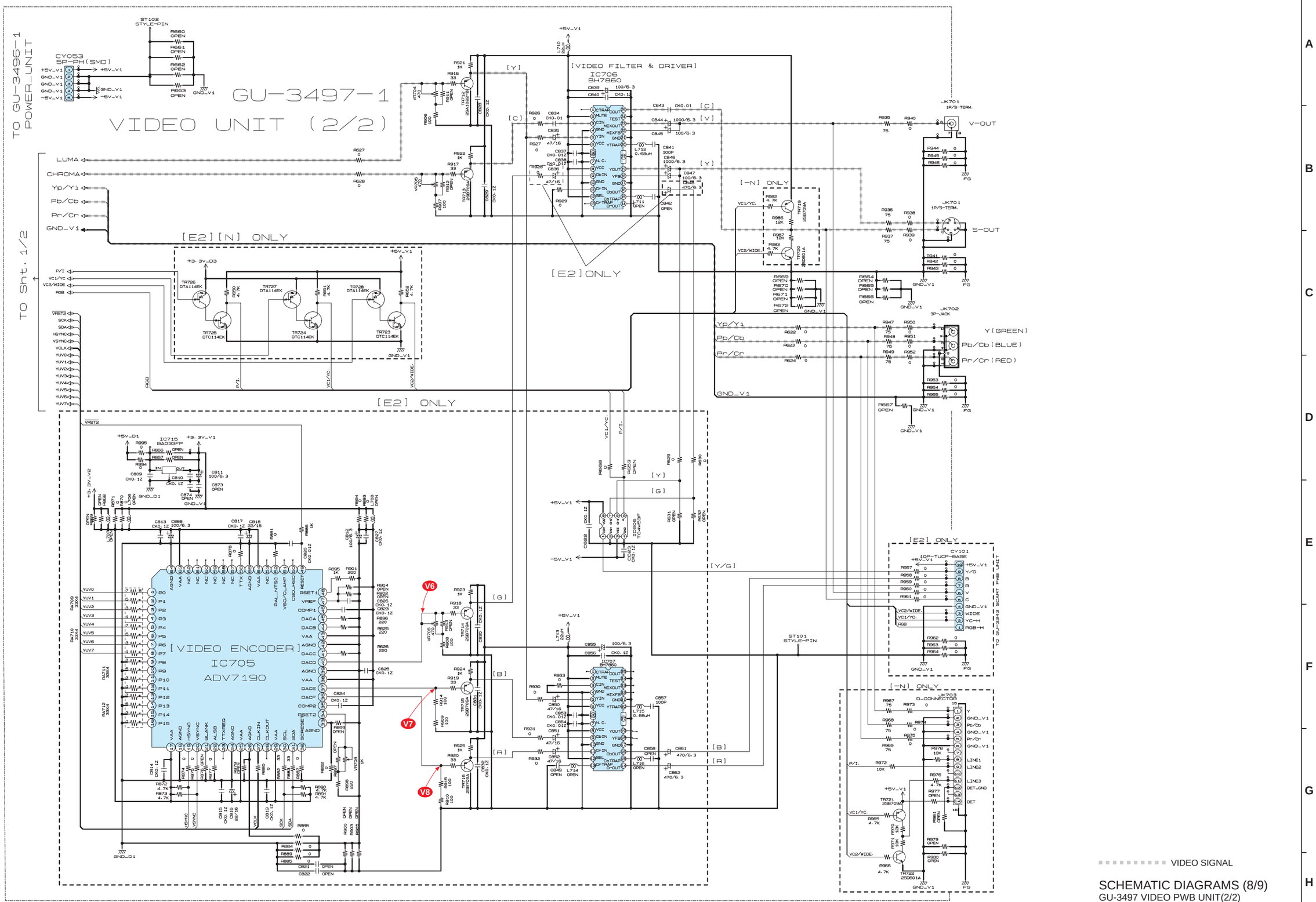
GU-3497-1
VIDEO UNIT (2/2)
TO GU-3496-1 POWER UNIT
TO Sht. 1/2
LUMA
CHROMA
Yp/Y1
Pb/Cb
Pr/Cr
GND_V1
[E2][N] ONLY
[E2] ONLY
[N] ONLY
[VIDEO FILTER & DRIVER]
IC706 BH7860
[VIDEO ENCODER]
IC705 ADV7190
IC715 BA033FP
V-OUT
S-OUT
Y(GREEN)
Pb/Cb(BLUE)
Pr/Cr(RED)
[Y/G]
VIDEO SIGNAL
SCHEMATIC DIAGRAMS (8/9)
GU-3497 VIDEO PWB UNIT(2/2)

# SCHEMATIC DIAGRAMS (9/9)

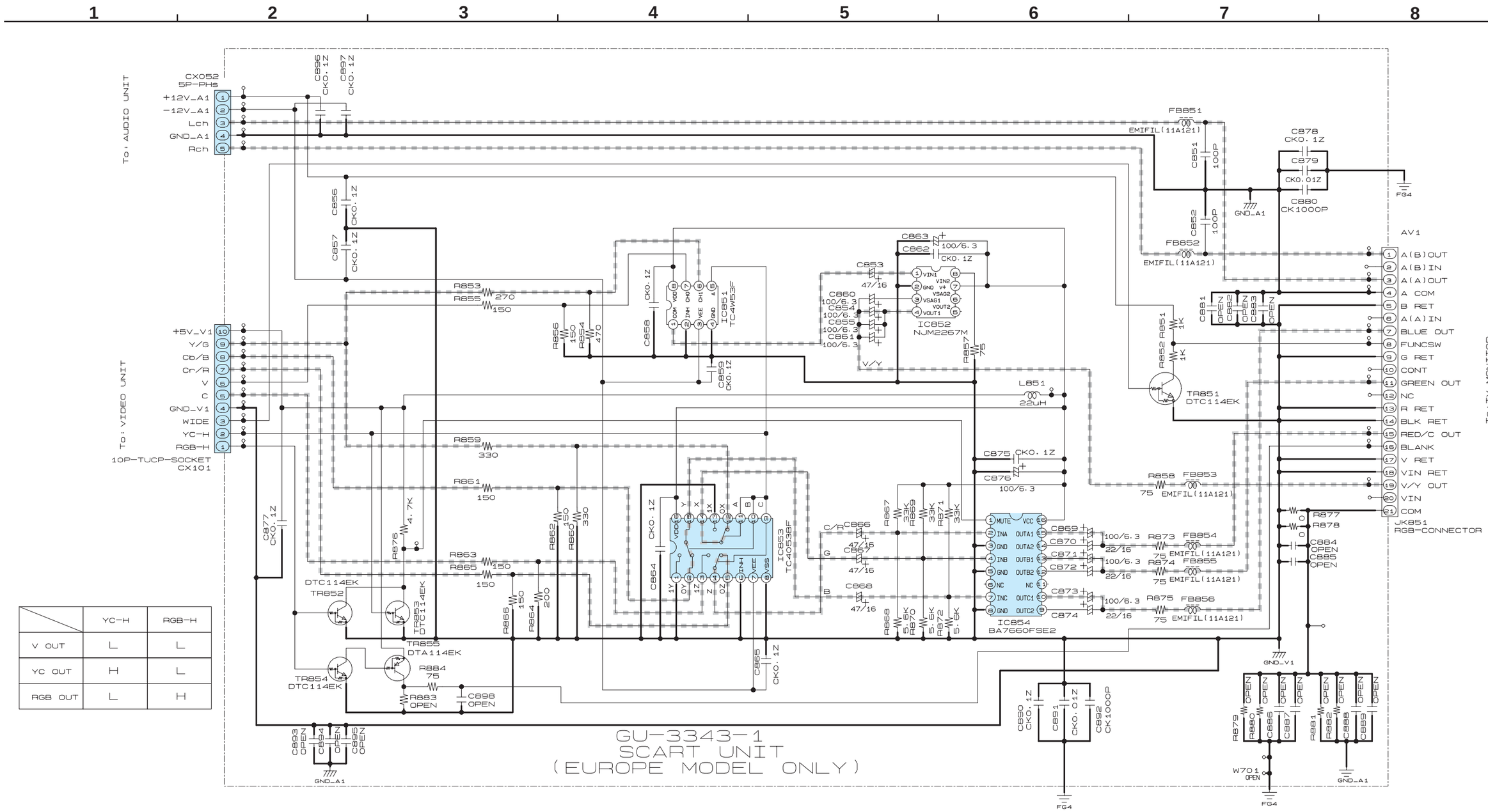


| | YC-H | RGB-H |
|---|---|---|
| V OUT | L | L |
| YC OUT | H | L |
| RGB OUT | L | H |

GU-3343-1
SCART UNIT
(EUROPE MODEL ONLY)

VIDEO SIGNAL

## SCHEMATIC DIAGRAMS (9/9)

GU-3343-1 SCART UNIT (Europe model only)