DENON

**For U.S.A., Canada, Europe, & Japan model**

Ver. 1

# SERVICE MANUAL

# MODEL DVD-3930/3930CI

## DVD AUDIO-VIDEO / SUPER AUDIO CD PLAYER

**注　意**

サービスをおこなう前に、このサービスマニュアルを必ずお読みください。本機は、火災、感電、けがなどに対する安全性を確保するために、さまざまな配慮をおこなっており、また法的には「電気用品安全法」にもとづき、所定の許可を得て製造されております。
従ってサービスをおこなう際は、これらの安全性が維持されるよう、このサービスマニュアルに記載されている注意事項を必ずお守りください。

- **For purposes of improvement, specifications and design are subject to change without notice.**
- 本機の仕様は性能改良のため、予告なく変更することがあります。
- 補修用性能部品の保有期間は、製造打切後8年です。

- **Please use this service manual with referring to the operating instructions without fail.**
- 修理の際は、必ず取扱説明書を参照の上、作業を行ってください。

- **Some illustrations using in this service manual are slightly different from the actual set.**
- 本文中に使用しているイラストは、説明の都合上現物と多少異なる場合があります。

DENON

TOKYO, JAPAN
Denon Brand Company, D&M Holdings Inc.

X0274 V.01 DE/CDM 0607

## SAFETY PRECAUTIONS

The following check should be performed for the continued protection of the customer and service technician.

## LEAKAGE CURRENT CHECK

Before returning the unit to the customer, make sure you make either (1) a leakage current check or (2) a line to chassis resistance check. If the leakage current exceeds 0.5 milliamps, or if the resistance from chassis to either side of the power cord is less than 460 kohms, the unit is defective.

## LASER RADIATION

Do not stare into beam or view directly with optical instruments, class 3A laser product.

**CAUTION** **Please heed the points listed below during servicing and inspection.**

### ◎Heed the cautions!

Spots requiring particular attention when servicing, such as the cabinet, parts, chassis, etc., have cautions indicated on labels or seals. Be sure to heed these cautions and the cautions indicated in the handling instructions.

### ◎Caution concerning electric shock!

(1) An AC voltage is impressed on this set, so touching internal metal parts when the set is energized could cause electric shock. Take care to avoid electric shock, by for example using an isolating transformer and gloves when servicing while the set is energized, unplugging the power cord when replacing parts, etc.

(2) There are high voltage parts inside. Handle with extra care when the set is energized.

### ◎Caution concerning disassembly and assembly!

Though great care is taken when manufacturing parts from sheet metal, there may in some rare cases be burrs on the edges of parts which could cause injury if fingers are moved across them. Use gloves to protect your hands.

### ◎Only use designated parts!

The set's parts have specific safety properties (fire resistance, voltage resistance, etc.). For replacement parts, be sure to use parts which have the same properties. In particular, for the important safety parts that are marked ⚠ on wiring diagrams and parts lists, be sure to use the designated parts.

### ◎Be sure to mount parts and arrange the wires as they were originally!

For safety reasons, some parts use tape, tubes or other insulating materials, and some parts are mounted away from the surface of printed circuit boards. Care is also taken with the positions of the wires inside and clamps are used to keep wires away from heating and high voltage parts, so be sure to set everything back as it was originally.

### ◎Inspect for safety after servicing!

Check that all screws, parts and wires removed or disconnected for servicing have been put back in their original positions, inspect that no parts around the area that has been serviced have been negatively affected, conduct an insulation check on the external metal connectors and between the blades of the power plug, and otherwise check that safety is ensured.

(Insulation check procedure)
Unplug the power cord from the power outlet, disconnect the antenna, plugs, etc., and turn the power switch on. Using a 500V insulation resistance tester, check that the insulation resistance between the terminals of the power plug and the externally exposed metal parts (antenna terminal, headphones terminal, microphone terminal, input terminal, etc.) is 1MΩ or greater. If it is less, the set must be inspected and repaired.

**CAUTION** **Concerning important safety parts**

Many of the electric and structural parts used in the set have special safety properties. In most cases these properties are difficult to distinguish by sight, and using replacement parts with higher ratings (rated power and withstand voltage) does not necessarily guarantee that safety performance will be preserved. Parts with safety properties are indicated as shown below on the wiring diagrams and parts lists is this service manual. Be sure to replace them with parts with the designated part number.

(1) Schematic diagrams ... Indicated by the ⚠ mark.

(2) Parts lists ... Indicated by the ⚠ mark.

Using parts other than the designated parts could result in electric shock, fires or other dangerous situations.

**注　意** **サービス、点検時にはつぎのことにご注意願います。**

### ◎注意事項をお守りください！

サービスのとき特に注意を必要とする個所についてはキャビネット、部品、シャーシなどにラベルや捺印で注意事項を表示しています。これらの注意書きおよび取扱説明書などの注意事項を必ずお守りください。

### ◎感電に注意！

(1) このセットは、交流電圧が印加されていますので通電時に内部金属部に触れると感電することがあります。従って通電サービス時には、絶縁トランスの使用や手袋の着用、部品交換には、電源プラグを抜くなどして感電にご注意ください。

(2) 内部には高電圧の部分がありますので、通電時の取扱には十分ご注意ください。

### ◎分解、組み立て作業時のご注意！

板金部品の端面の『バリ』は、部品製造時に充分管理をしておりますが、板金端面は鋭利となっている箇所が有りますので、部品端面に触れたまま指を動かすとまれに怪我をする場合がありますので十分注意して作業して下さい。手の保護のために手袋を着用してください。

### ◎指定部品の使用！

セットの部品は難燃性や耐電圧など安全上の特性を持ったものとなっています。従って交換部品は、使用されていたものと同じ特性の部品を使用してください。特に配線図、部品表に ⚠ 印で指定されている安全上重要な部品は必ず指定のものをご使用ください。

### ◎部品の取付けや配線の引きまわしは、元どおりに！

安全上、テープやチューブなどの絶縁材料を使用したり、プリント基板から浮かして取付けた部品があります。また内部配線は引きまわしやクランパーによって発熱部品や高圧部品に接近しないように配慮されていますので、これらは必ず元どおりにしてください。

### ◎サービス後は安全点検を！

サービスのために取り外したねじ、部品、配線などが元どおりになっているか、またサービスした個所の周辺を劣化させてしまったところがないかなどを点検し、外部金属端子部と、電源プラグの刃の間の絶縁チェックをおこなうなど、安全性が確保されていることを確認してください。

（絶縁チェックの方法）
電源コンセントから電源プラグを抜き、アンテナやプラグなどを外し、電源スイッチを入れます。500V 絶縁抵抗計を用いて、電源プラグのそれぞれの端子と外部露出金属部［アンテナ端子、ヘッドホン端子マイク端子、入力端子など］との間で、絶縁抵抗値が 1 MΩ 以上であること、この値以下のときはセットの点検修理が必要です。

**注　意** **安全上重要な部品について**

本機に使用している多くの電気部品、および機構部品は安全上、特別な特性を持っています。この特性はほとんどの場合、外観では判別つきにくく、またもとの部品より高い定格（定格電力、耐圧）を持ったものを使用しても安全性が維持されるとは、限りません。安全上の特性を持った部品は、このサービスマニュアルの配線図、部品表につぎのように表示していますので必ず指定されている部品番号のものを使用願います。

(1) 配線図…⚠マークで表示しています。

(2) 部品表…⚠マークで表示しています。

指定された部品と異なるものを使用した場合には、感電、火災などの危険を生じる恐れがあります。

## WIRE ARRANGEMENT

If wire bundles are untied or moved to perform adjustment or parts replacement etc., be sure to rearrange them neatly as they were originally bundled or placed afterward. Otherwise, incorrect arrangement can be a cause of noise generation.

## ワイヤー整形図

調整や部品の交換等により、ワイヤー類の結束をはずしたり移動させた場合には、それらの作業が完了した時点でワイヤーの整形をおこなってください。正しく整形されてないとノイズ発生の原因となることがあります。

### Wire arrangement viewed from the top

### 上面からみたワイヤー整形

**DVD3930CIE3**

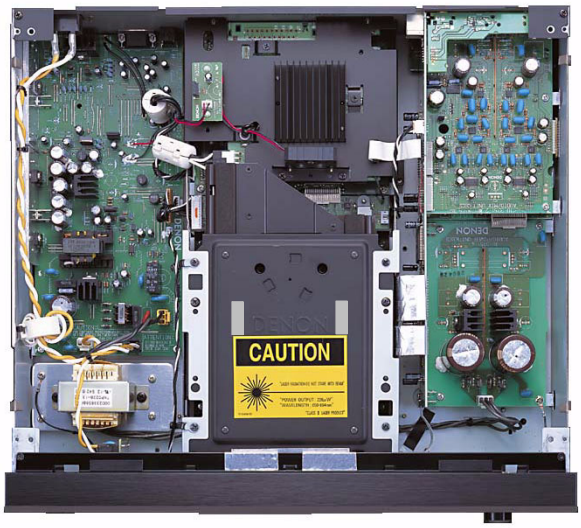


**DVD3930E2**

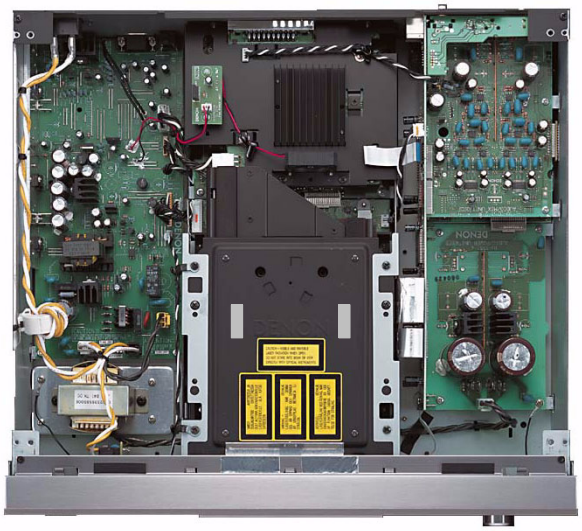

**DVD3930JP**

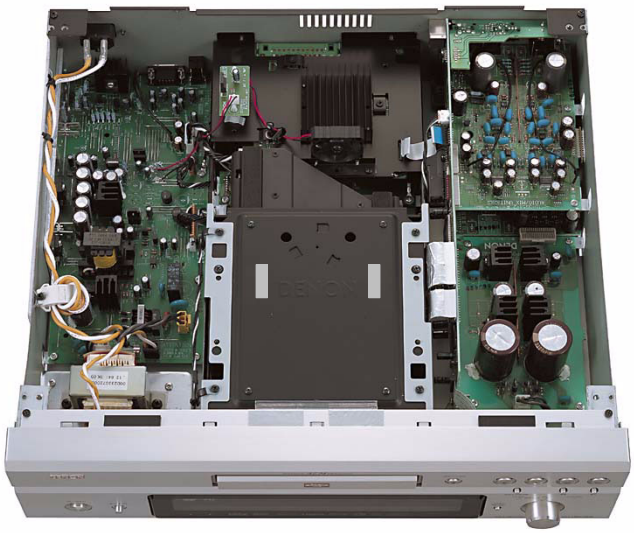

# DISASSEMBLY

(Follow the procedure bellow in reverse order when reassembling.)

## Disassembly and abandonment

(1) Disassembly of a set
It decomposes according to a work procedure 1.~11. clause.

(2) Judgment of use parts
It classifies according to the discernment signs in a figure (c, m, s, p, etc.).

(3) Abandonment of parts
Each part article is discarded according to the specification abandonment method of each self-governing body.
The parts of ◆ mark show that it shall be remove.

# 各部のはずしかた

（組み立てるときは、逆の順序でおこなってください。）

## 分解と廃棄

(1) セットの分解
作業手順 1. ～ 11. 項に従い分解を実施します。

(2) 使用部品の分別
図中の識別記号 (c, m, s , p 等 ) に従い分別する。

(3) 部品の廃棄
各部品は、各自治体の指定廃棄方法に従い廃棄する。
◆記号付き部品は、分離する事。

| No. | Part Name | Q'ty | Material |
|---|---|---|---|
| c • 1 | Loader Panel ass'y | 1 | - |
| c • 2 | DVD mechanism ass'y | 1 | - |
| c • 3 | Cord Holder | 5 | - |
| c • 4 | Power P.W.B. ass'y | 1 | - |
| c • 5 | Ac inlet | 1 | - |
| c • 6 | Ferrite core & 3P VH wire | 1 | - |
| c • 7 | Power Trans | 1 | |
| c • 8 | FAN & FAN Power P.W.B. ass'y | 1 | - |
| c • 9 | Block of Video P.W.B. | 1 | - |
| c • 10 | M.Support P.W.B. | 1 | - |
| c • 11 | Block of Audio P.W.B. | 1 | - |
| c • 12 | Display P.W.B. ass'y | 1 | - |
| c • 13 | S.Knob sub ass'y | 1 | - |
| c • 14 | P.SW-1 P.W.B. ass'y | 1 | - |
| c • 15 | P.SW-2 P.W.B. ass'y | 1 | - |
| c • 16 | Power knob(SUB) ass'y | 1 | - |
| c | Wire ( the othes ) | - | - |
| | c (Complex) totals | | 2,481g |

| No. | Part Name | Q'ty | Material |
|---|---|---|---|
| p • 1 | PCB Support | 2 | PA6 |
| p • 2 | Heat sheet | 1 | Silicon |
| p • 3 | Foot ass'y | 4 | ABS+CR |
| p • 4 | Blind ass'y | 1 | PVC+PE |
| p • 5 | Inner panel | 1 | ABS |
| p • 6 | Part of inner panel | 1 | ABS |
| p • 7 | Lens | 3 | PMMA |
| p • 8 | Knob Guide | 1 | ABS |
| p • 9 | Rubber sheet | 2 | CR |
| p | the othes | - | - |
| | p (Plastics) totals | | 396g |

| No. | Part Name | Q'ty | Material |
|---|---|---|---|
| m • 1 | Top cover | 1 | SECC+PVC |
| m • 2 | Inner cover | 1 | SECC |
| m • 3 | Mecha side cover | 1 | SECC |
| m • 4 | Heat Plate(Al) | 1 | A1100P |
| m • 5 | Heat Plate(Cu) | 1 | C1100P |
| m • 6 | Trans Base | 1 | A1100P |
| m • 7 | Support bracket ass'y | 1 | SECC+A6063S |
| m • 8 | Chassis & the others | 1 | SECC |
| m • 9 | Spring | 1 | SUS304 |
| m • 10 | Spring | 2 | SUS304 |
| m • 11 | Front panel | 1 | A6063SS |
| m | the othes | - | - |
| | m (Metals) totals | | 8,532g |

| No. | Part Name | Q'ty | Material |
|---|---|---|---|
| s • 1 | Screw 3X6 CBTS(S)-B | 30 | SW |
| s • 2 | Screw 4X8 3P SWELLING | 9 | SW |
| s • 3 | Screw 3X8 CFTS(S) | 8 | SW |
| s • 4 | Screw 3X8 CBTS(S)-Z | 27 | SW |
| s • 5 | Screw 3X10 CBTS(P)-B | 4 | SW |
| s • 6 | Screw 3X8 CBTS(P)-B | 17 | SW |
| s • 7 | M3 nut (RS-232C) | 2 | SW |
| s • 8 | Screw 3X10 CFS | 5 | SW |
| s • 9 | Screw 3X10 CBTS(S)-Z | 8 | SW |
| s • 10 | Screw 4X8 CBTS(S)-B | 2 | SW |
| s • 11 | Screw 3X6 CFS | 5 | SW |
| s • 12 | Screw FIXING | 17 | SW |
| s • 13 | Screw 3X6 CPTS(S)-NI | 1 | SW |
| s • 14 | Screw 3X4 CBTS(S)-Z | 1 | SW |
| s • 15 | Screw 3X10 Special(P) | 2 | SW |
| s | the othes | - | - |
| (E2 model) | s (Screws) totals | | 85g |

| | |
|---|---|
| **Total Weight** | 11,500g |
| Recycle Weight | 9,013g |
| Abandonment Weight | 2,481g |

The parts of ◆ mark show that it shall be remove at the disassembly and the abandonment

| | Part Name | Dimensions | Ref.No. | Unit No. | Q'ty |
|---|---|---|---|---|---|
| ◆ | CE04W2G101MC(KMG) | Φ16.0Xh40.0mm | C-904 | c • 3 Power P.W.B. ass'y (GU-3750-2) | 1 |
| ◆ | CE04W0J562MC(KY)K35 | Φ16.0X31.5mm | C-916,C-917,C-919,C-922,C-955 | c • 3 Power P.W.B. ass'y (GU-3750-2) | 5 |
| ◆ | CE04W1E102MC J30(KY) | Φ10.0X30.0hmm | C-913,C-914 | c • 3 Power P.W.B. ass'y (GU-3750-2) | 2 |
| ◆ | CE04W1H332MC(RFS#5)-T | Φ30.0Xh50.0hmm | C-854,C-855 | c • 3 A.Power P.W.B. ass'y (GU-3731-4) | 2 |
| ◆ | CE04W1H471MC(RFS#A) | Φ16.0Xh35.5mm | C-814,C-815 | c • 3 A.Power P.W.B. ass'y (GU-3731-4) | 2 |

# 1. Top cover & Inner cover

## 1.1. Top cover

(1) Remove 2 screws (s • 1) on the rear side and 9 screws (s • 2) on the top and the both sides.

(2) Widen the Top cover (m • 1) a little laterally, then detach it with sliding.

## 1.2. Inner cover

(1) Remove 4 screws (s • 3) on the top side.

(2) Detach Inner cover (m • 2).

# 1. Top cover & Inner cover

## 1.1. トップカバー

(1) 背面側から s・1 のねじ 2 本と天･側面から s・2 のねじ 9 本をはずします。

(2) 左右へ少し広げて m・1：Top cover をはずします。

## 1.2. インナーカバー

(1) 天面から s・3 のねじ 4 本をはずします。

(2) m・2：Inner cover をはずします。

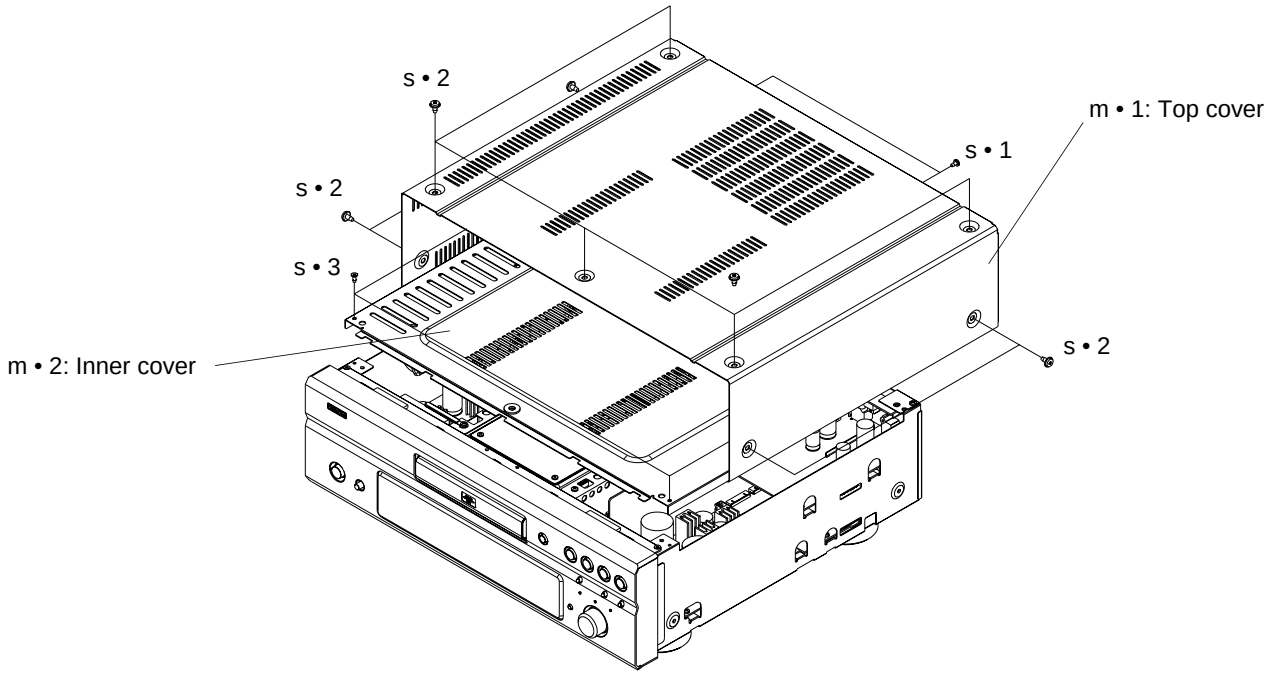

## 2. DVD mechanism ass'y

### 2.1. When the Disc tray can be ejected electrically.

(1) Switch on, and press [OPEN/CLOSE] button to open the Disc tray.

(2) Detach the Loader panel ass'y (c • 1) by lifting.

(3) Close the Disc tray.

(4) Remove 4 screws (s • 4) and 4 screws (s • 5) on the top side.
Remove 2 side screws (s • 1), then detach the Mecha side cover(m • 3).

(5) Disconnect [CX131] [CX211] from the MAIN P.W.B. (GU-3749-1).
Disconect [CY221] [CY331] from the AUDIO (DIGITAL) P.W.B. (GU-3751-1).

(6) Take the DVD mechanism ass'y (c • 2) off.

### 2.2. When the Disc tray cannot be ejected electrically.

(1) Insert a driver into the left hole, and push the Plate Gear of the DVD Mechanism, to open the Disc Tray.
(Arrow direction)

(2) The same steps described on 2-1. (2)~(6).

## 2. DVD mechanism ass'y

### 2.1. ディスクトレイが電動でオープン出来る場合

(1) 電源を入れ「 OPEN/CLOSE 」ボタンを押して、ディスクトレイを開きます。

(2) c・1：Loader panel ass'y を持ち上げてはずします。

(3) ディスクトレイを閉じます。

(4) 天面側から s・4 のねじ 4 本と s・5 のねじ 4 本をはずします。
側面側から s・1 のねじ 2 本をはずし、m・3：Mecha side cover と c ・3：Cord Holder 2 個をはずます。

(5) メイン基板 (GU-3749-1) よりワイヤー [CX131] [CX211] をはずします。
オーディオ ( デジタル ) 基板 (GU-3751-1) からワイヤー [CY221] [CY331] をはずします

(6) c・2：DVD mechanism ass'y をはずします。

### 2.2. ディスクトレイが電動でオープン出来ない場合

(1) 左側面の孔よりドライバー等を挿し込みメカユニットのプレートギアを押してディスクトレイを開きます。
( 矢印方向 )

(2) 2-1.(2) ～ (6) の作業に同じ。

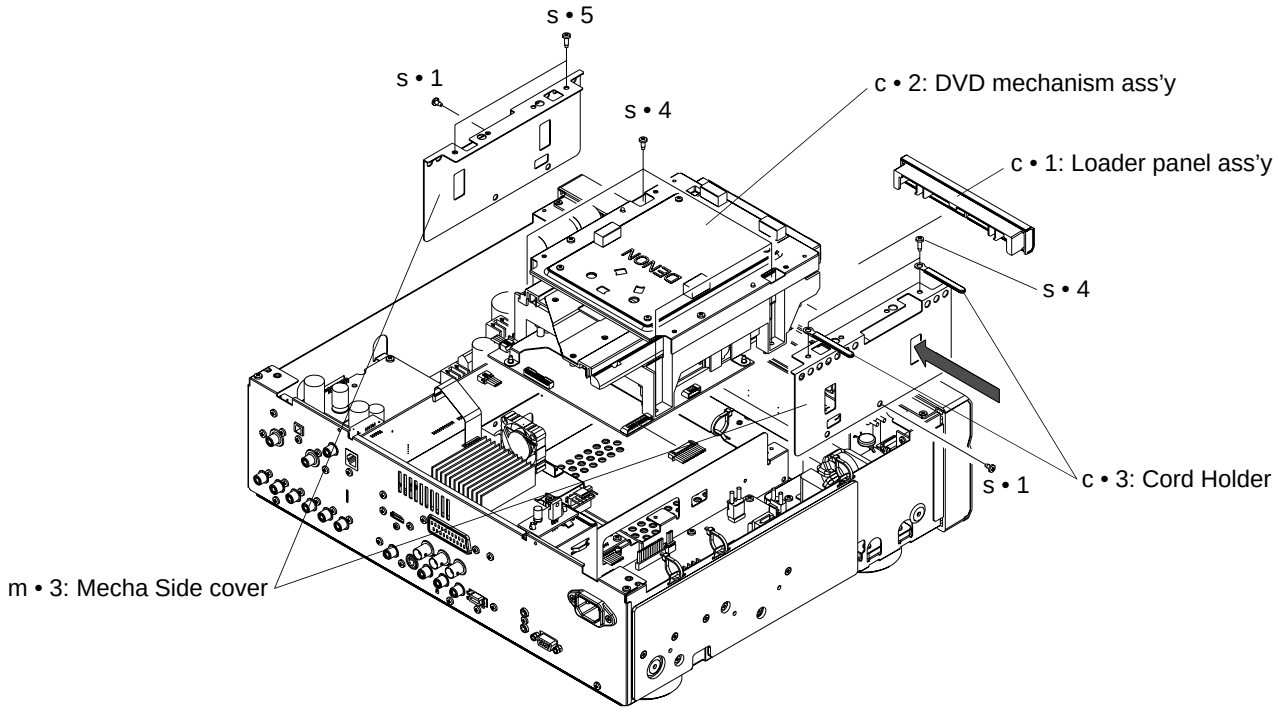

## 3. Front panel sub ass'y

(1) Disconnect the wire [CX031] [CX025] connecting From the Front panel sub ass'y (a • 1).

(2) Remove 2 top screws (s • 3) and 4 bottom screws (s • 1), then detach the Front panel sub ass'y.

## 3. Front panel sub ass'y

(1) a・1：Front panel sub ass'y からのワイヤー [CX031] [CX025] をはずします。

(2) 天面から s・3 のねじ 2 本と底面から s・1 のねじ 4 本をはずし、a・1：Front panel sub ass'y をはずします。

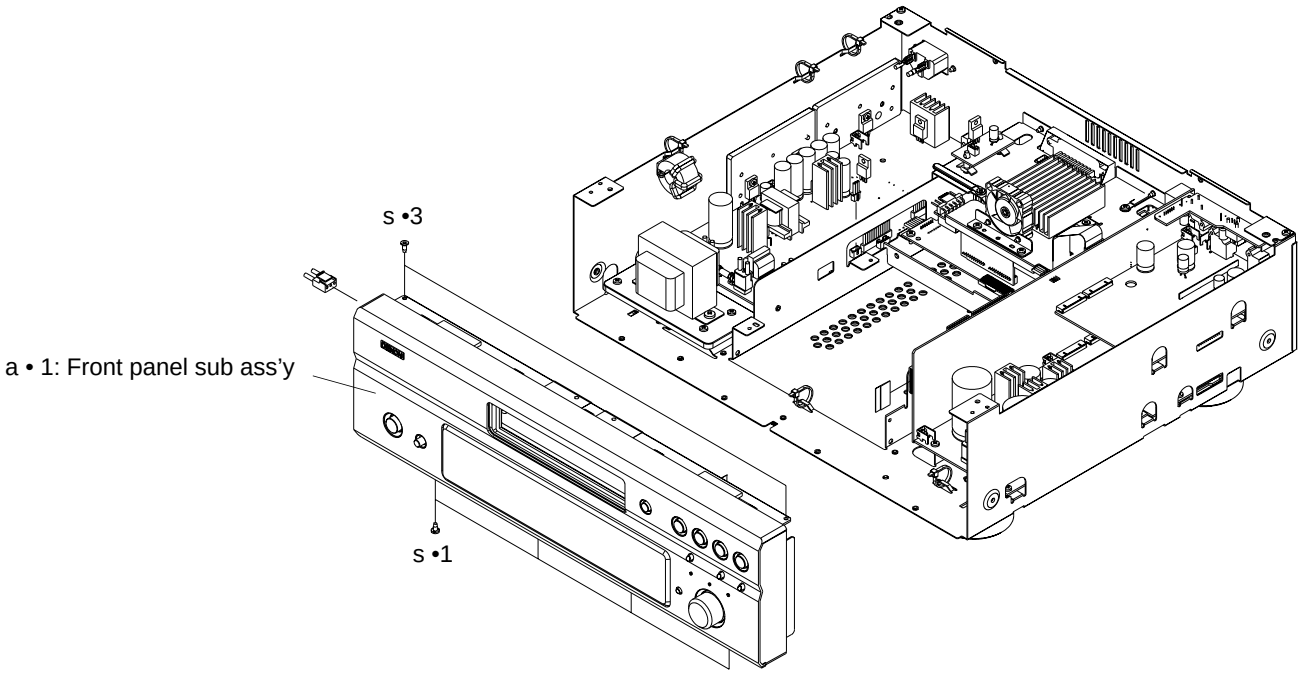

# 4. Power P.W.B. ass'y etc.

## 4.1. Power P.W.B. ass'y

(1) Remove 1 screw (s • 6) and 2 nut (s • 7) on the rear side. Remove 5 side screws (s • 8) and 4 top screws(s • 3).

(2) Detach the Heat plate (Al) (m • 4) and Heat plate (Cu) (m • 5).

(3) Disconnect the wire [CX024] [CX025] [CX026] [CW071] [CX064] connecting Power P.W.B. ass'y (c • 4).

(4) Detach the Power P.W.B. ass'y (c • 4).
Thing to do abandonment based on WEEE directive detaching E-Capacitor of C904, C913, C914, C916, C917, C919, C922, C955 when abandoning Power P.W.B. ass'y(c • 4).

## 4.2. AC INLET

(1) Remove 2 rear screws (s • 3).

(2) Disconnect the STO terminals from AC inlet (c • 5).

(3) Detach the AC inlet (c • 5).

## 4.3. Ferrite core & 3P VH wire

(1) Cut 3 clamper on the left side of the chassis.

(2) Detach the Ferrite core & 3P VH wire (c • 6).

## 4.4. Power Trans & Trans Base

(1) Remove 2 top screw (s • 10).

(2) Detach the Power Trans (c • 7).

(3) Remove 4 top screw (s • 9).

(4) Detach the Trans Base (m • 6).

# 4. Power P.W.B. ass'y etc.

## 4.1. 電源基板 ass'y

(1) 背面から s・6 のねじ 1 本と s・7 のナット 2 本をはずします。
側面から s・8 のねじ 5 本と天面から s・4 のねじ 4 本をはずします。

(2) m・4：Heat Plate (Al) と m・5：Heat Plate (Cu) をはずします。

(3) c・4：電源基板 ass'y からワイヤー [CX024] [CX025] [CX026] [CX064] [CW071] をはずします。

(4) c・4：電源基板 ass'y をはずします。
電源基板 ass'y の廃棄時は、
C904、C913、C914、C916、C917、C919、C922、C955 電解コンデンサを取外して WEEE 指令に基づく処理の事。

## 4.2. AC INLET

(1) 背面から s・3 のねじ 2 本をはずします。

(2) c・5：AC INLET から STO コネクターをはずします。

(3) c・5：AC INLET をはずします。

## 4.3. フェライトコア & 3P VH ワイヤー

(1) シャーシ左側面のクランプバンド3箇所をカットします。

(2) c・6：フェライトコアと 3P VH ワイヤーをはずします。

## 4.4. 電源トランスとトランスベース

(1) 天面から s・10 のねじ 2 本をはずします。

(2) c・7：Power Trans をはずします。

(3) 天面から s・9 のねじ 4 本をはずします。

(4) m・6：Trans Base をはずします。

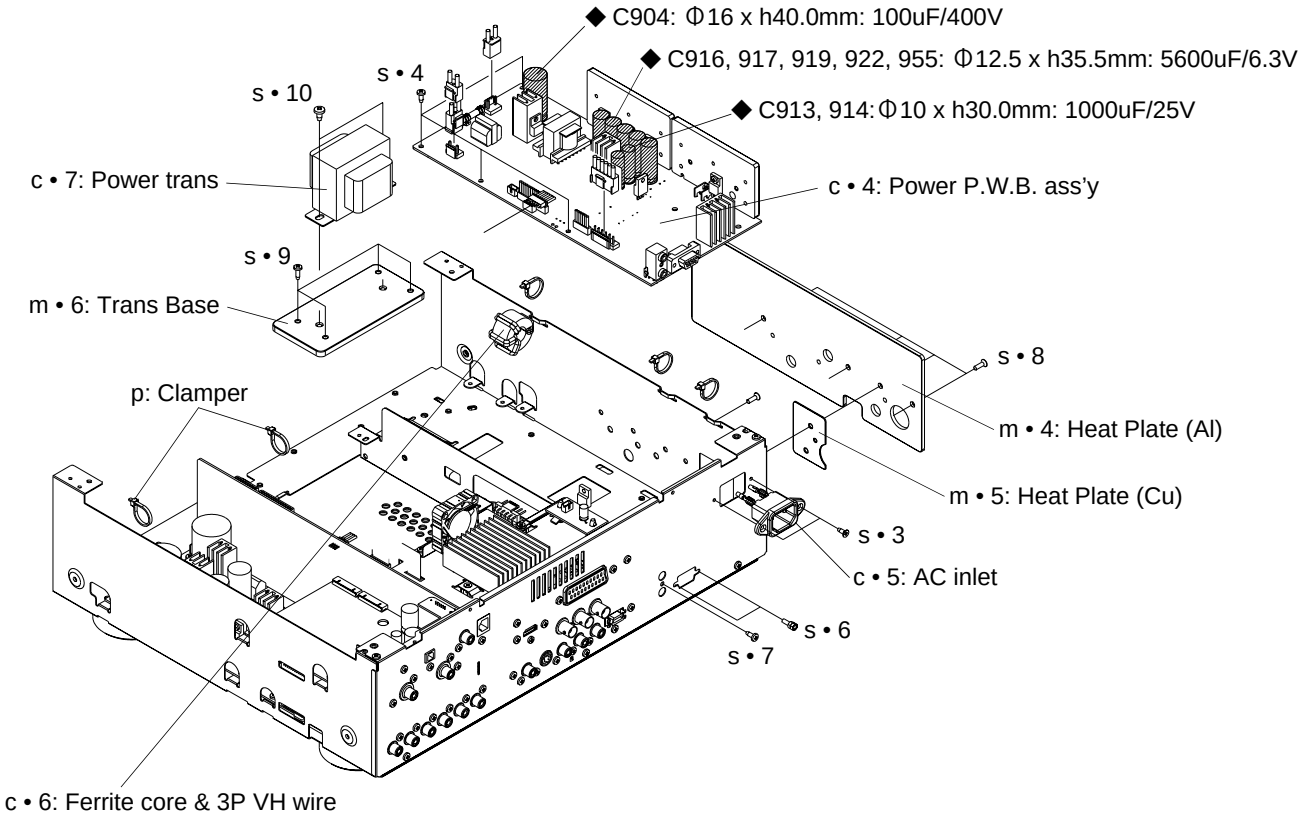

# 5. Block of Video P.W.B.

## 5.1. Support bracket ass'y

(1) Remove 2 rear screws (s • 1) and a side screw (s • 1) and 2 top screws (s • 1) and 3 top screws (s • 11).

(2) Disconnect [CY131] [CY041 (only E2) ] from the D.Video P.W.B. ass'y (GU-3752).

(3) Remove a top screw (s • 14), take the Cord Holder (p • 3) off. ( only E2 )

(4) Remove 2 PCB Support (p • 1) and 2 top screws (s • 1), take the FAN & FAN Power P.W.B. ass'y (c • 7) off.

(5) Take the Support bracket ass'y (m • 7) off.

(6) Take the Heat sheet (p • 2) off.

## 5.2. Block of Video P.W.B.

(1) Remove 6 screws (s • 1) and 5 (JP: 6, E2: 7) screws (s • 12) and 1 screw (s • 13) on the rear side and 4 screws (s • 4) on the top side.

(2) Take the Block of Video P.W.B. (GU-3749-2/GU-3749-3 /GU-3750-6/GU-3750-7/GU-3750-8/GU-3752) (c • 9) off.

(3) Detach the M.Support P.W.B. (c • 10) off.

# 5. Block of Video P.W.B.

## 5.1. サポート板金 ass'y

(1) 背面の s・1 のねじ 2 本、側面の s・1 のねじ 1 本、天面から s・1 のねじ 2 本と s・11 のねじ 3 本をはずします。

(2) デジタルビデオ基板 ass'y (GU-3752) よりワイヤー [CY131] [CY041 (E2 のみ )] をはずします。

(3) 天面から s・14 のねじをはずし、c・3：コードホルダーをはずします。(E2 モデル )

(4) 2 個の p・1:PCB サポートと天面から s・1 のねじ 2 本をはずし、c・8：FAN & FAN 電源基板をはずします。

(5) m・7：サポート板金 ass'y をはずします。

(6) p・2：ヒートシートをはずします。

## 5.2. Video 基板ブロック

(1) 背面側から s・1 のねじ 6 本、s・12 のねじ 5 本 ( 国内：6、E2：7) と s・13 のねじ 1 本と天面から s・4 のねじ 4 本をはずします。

(2) c・9 ビデオ基板ブロック (GU-3749-2/GU-3749-3/GU-3750-6/GU-3750-7/GU-3750-8/GU-3752) をはずします。

(3) c・10：M サポート基板をはずします。

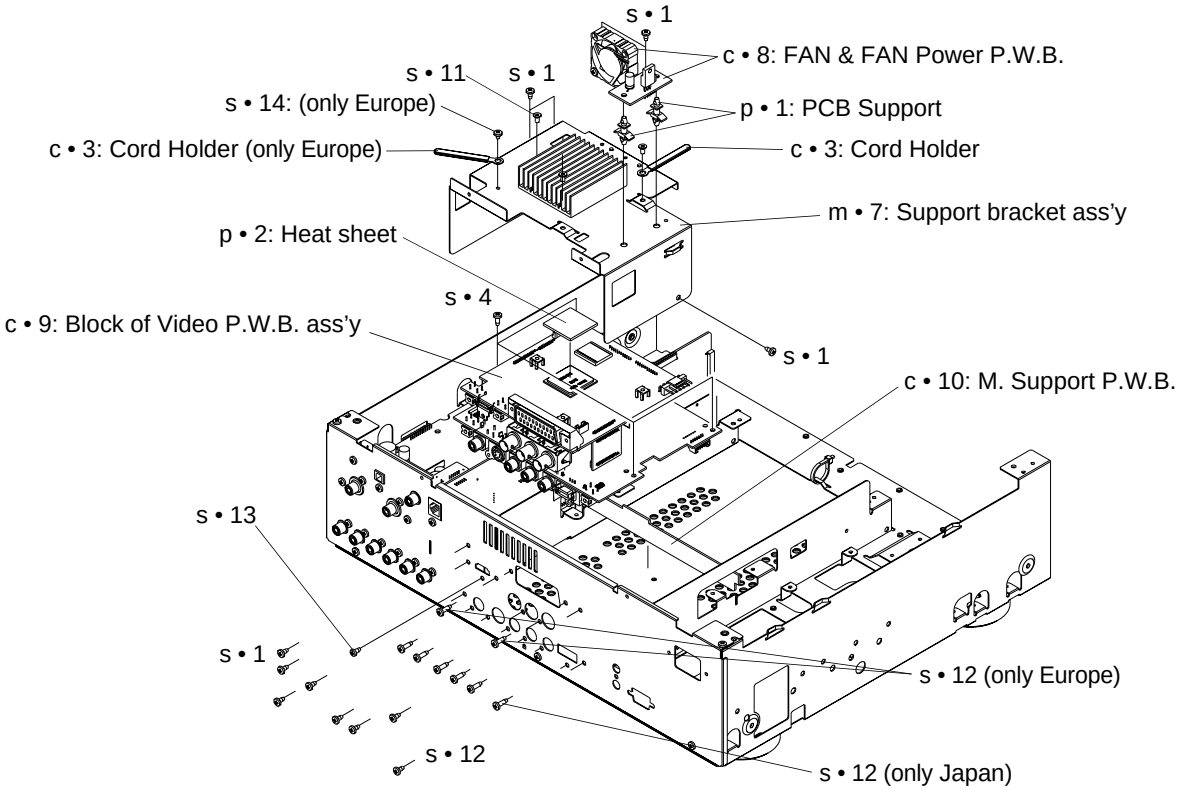

## 6. Block of Audio P.W.B.

### 6.1. Block of AUDIO P.W.B.

(1) Remove 4 screws (s • 1) and 10 screws (s • 12) on the rear side and 8 screws (s • 4) on the top side.

(2) Disconnect the wire [CY044] connecting Block of AUDIO P.W.B. (c • 11).

(3) Detach the Block of AUDIO P.W.B. (c • 11).
Thing to do abandonment based on WEEE directive detaching E-Capacitor of C814, C815, C854, C855 when abandoning Block of AUDIO P.W.B. (c • 11).

## 6. Bloack of Audio P.W.B.

### 6.1. オーディオ基板ブロック

(1) 背面から s・1 のねじ 4 本と s・12 のねじ 10 本と天面から s・4 のねじ 8 本をはずします。

(2) c・11：オーディオ基板ブロックからワイヤー[CY044] をはずします。

(3) c・11：オーディオ基板ブロックをはずします。
c・11：オーディオ基板ブロックの廃棄時は、
C814、C815、C854、C855 電解コンデンサを取外して WEEE 指令に基づく処理の事。

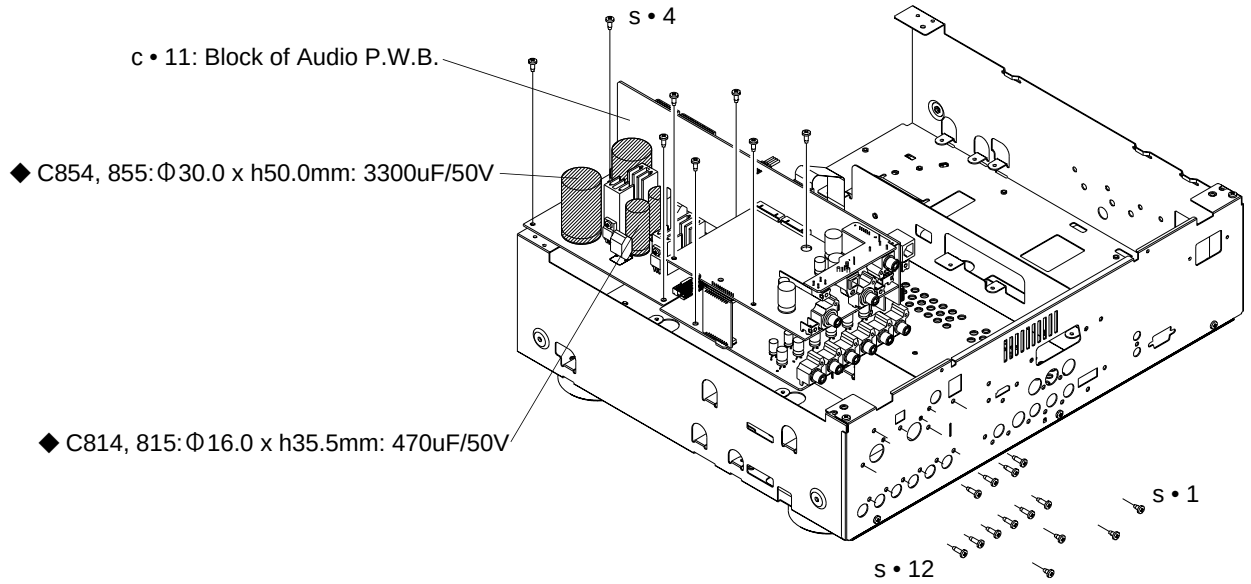


## 7. Foot ass'y

(1) Remove 4 bottom screws (s • 4).

(2) Take the Foot ass'y (p • 3) off.

## 7. Foot ass'y

(1) 底面の s・4 のねじ 4 本をはずします。

(2) p・3：Foot ass'y をはずします。

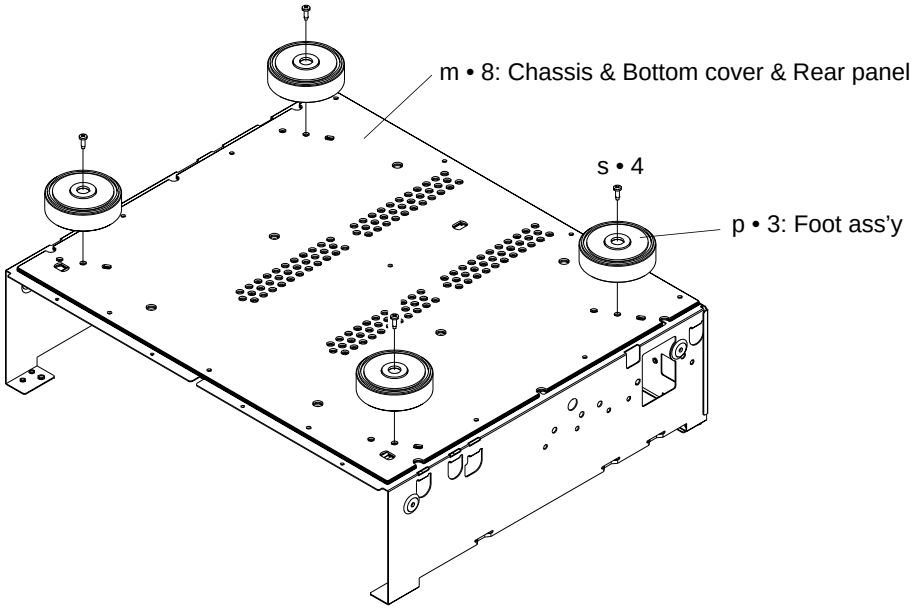

## 8. Parts on Front panel sub ass'y (a • 1)

### 8.1. Display P.W.B. ass'y

(1) Remove 10 screws (s • 6).

(2) Take the Display P.W.B. ass'y (c • 12) off.

(3) Disconnect [CY052].

(4) Take the Spring (m • 9) and the S. knob sub ass'y (c • 13) off.

### 8.2. P. SW-1 P.W.B. ass'y

(1) Remove 2 screws (s • 6).

(2) Take the P. SW-1 P.W.B. ass'y (c • 14) off.

### 8.3. P. SW-2 P.W.B. ass'y

(1) Remove 4 screws (s • 6).

(2) Take the P. SW-2 P.W.B. ass'y (c • 15) off.

(3) Take the Power knob (SUB) ass'y (c • 16) off.

### 8.4. Blind ass'y

(1) Remove 2 screws (s • 14).

(2) Take the 2 Springs (m • 10) and the Blind ass'y (p • 3) off.

### 8.5. Inner panel

(1) Detach 4 top hooks and 4 rear hooks.

(2) Take the Inner panel (p • 5) off.

### 8.6. Front panel

(1) Detach the Part of Inner panel (p • 6), 3 Lens (p • 7), Knob Guide (p • 8) and 2 rubber sheets (p • 9) by minus (-) driver or etc.

## 8. Parts on Front panel sub ass'y(a・1)

### 8.1. ディスプレイ基板

(1) s・6 のねじ 10 本をはずします。

(2) c・12：ディスプレイ基板をはずします。

(3) ワイヤー [CY052] をはずします。

(4) c・13：S. ノブ sub ass'y と m・9 バネをはずします。

### 8.2. 電源 SW-1 基板

(1) s・6 のねじ 2 本をはずします。

(2) c・14：電源 SW-1 基板をはずします。

### 8.3. 電源 SW-2 基板

(1) s・6 のねじ 4 本をはずします。

(2) c・15：P.SW-2 基板をはずします。

(3) c・16：電源 2 次側ノブをはずします。

### 8.4. ブラインド ass'y

(1) s・15 のねじ 2 本をはずします。

(2) m・10：バネ 2 個と p・3：ブラインド ass'y をはずします。

### 8.5. インナーパネル

(1) 上下各 4 個のフックをはずします。

(2) p・5：インナパネルをはずします。

### 8.6. フロントパネル

(1) p・6：インナーパネルカット部品、3 個の p・7：レンズ、p・8：ノブガイド、2 個の p・9：ラバーをマイナスドライバー等ではずします。

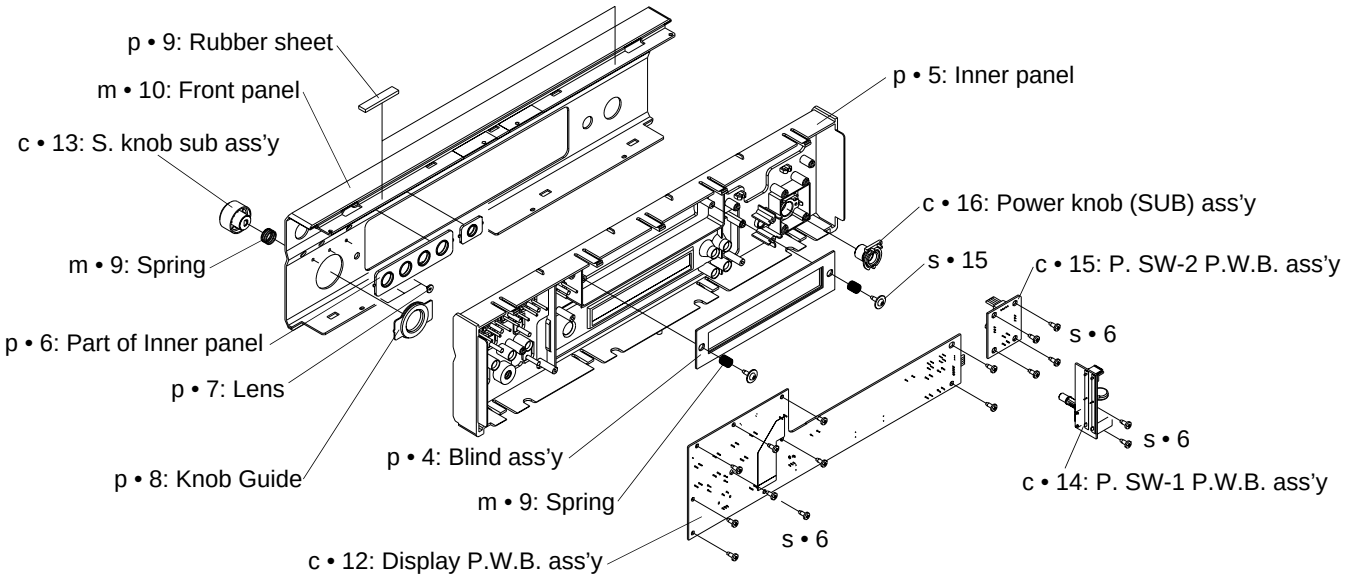

# DIAGNOSTICS OF OPTICAL PICKUP AND REPLACING TRAVERSE UNIT

Make failure diagnostics of the Optical Pickup as follows.
If the laser drive current (Iop) becomes more than 1.5 times of the initial value, the Optical Pickup should be replaced.
The laser drive current initial value is checked by "Iop checked Method" of next page.
In case of replacing the Pickup, change the whole part of the Traverse Unit.
No mechanical adjustment is necessary after the replacement.

# 光ピックアップの故障診断とトラバースユニットの交換

次の順序で故障診断を行ってください。
レーザー駆動電流 Iop 値が初期値の 1.5 倍以上になっている場合は光ピックアップ交換の目安となります。
レーザー駆動電流初期値は、次ページ "Iop 値の確認方法 " で確認できます。
ピックアップ交換の場合は、トラバースユニット単位での交換となります。メカの調整は不要です。

**レーザー駆動電流初期値 :**
**Laser drive current initial value:**

**DVD:**

| FL Display (The display part of 13 digits) | | | | | | | | | | | | |
|---|---|---|---|---|---|---|---|---|---|---|---|---|
| 1 | 2 | 3 | 4 | 5 | 6 | 7 | 8 | 9 | 10 | 11 | 12 | 13 |
| T | 2 | 2 | — | m | m | m | m | — | n | n | n | n |

**CD:**

| FL Display (The display part of 13 digits) | | | | | | | | | | | | |
|---|---|---|---|---|---|---|---|---|---|---|---|---|
| 1 | 2 | 3 | 4 | 5 | 6 | 7 | 8 | 9 | 10 | 11 | 12 | 13 |
| T | 2 | 1 | — | m | m | m | m | — | n | n | n | n |

Disc no read, unsteady playback, etc.

↓

Laser drive current (Iop) check
HF wave form check
(Refer to WAVE FORMS)

↓

Present value exceeds the initial value by 1.5 times

↓

Traverse Unit replacing

↓

Laser current (Iop) memorizing after replacement

ディスクを読み込まない
スムーズに再生しない、等

↓

レーザー駆動電流 Iop 値の確認
ＨＦ 波形の確認
（WAVE FORMS 参照）

↓

現在値が初期値の
1.5 倍になっている

↓

トラバースユニット交換

↓

交換後にレーザー電流値の記憶

## 1. Iop checked Method

Select the laser ON/OFF (CD/DVD) mode of the test mode, and check the Iop value of DVD laser or CD laser.
(See page 19 for test mode.)

| FL Display (The display part of 13 digits) | | | | | | | | | | | | |
|---|---|---|---|---|---|---|---|---|---|---|---|---|
| 1 | 2 | 3 | 4 | 5 | 6 | 7 | 8 | 9 | 10 | 11 | 12 | 13 |
| T | 2 | | L | a | s | e | r | O | n | O | f | f |

### 1.1. DVD laser current check

(1) Press the SKIP REV or SKIP FWD button to display the laser current value, and then select T22.
(2) Check the current value of Iop (nnnn).

| FL Display (The display part of 13 digits) | | | | | | | | | | | | |
|---|---|---|---|---|---|---|---|---|---|---|---|---|
| 1 | 2 | 3 | 4 | 5 | 6 | 7 | 8 | 9 | 10 | 11 | 12 | 13 |
| T | 2 | 2 | — | m | m | m | m | — | n | n | n | n |

( ー : Off, DVD laser, Initial value: mm.mm [mA], Current value: nn.nn [mA])

### 1.2. CD Laser current check

(1) Press the SKIP REV or SKIP FWD button to display the laser current value, and then select T21.
(2) Check the current value of Iop (nnnn).

| FL Display (The display part of 13 digits) | | | | | | | | | | | | |
|---|---|---|---|---|---|---|---|---|---|---|---|---|
| 1 | 2 | 3 | 4 | 5 | 6 | 7 | 8 | 9 | 10 | 11 | 12 | 13 |
| T | 2 | 1 | — | m | m | m | m | — | n | n | n | n |

( ー : Off, CD laser, Initial value: mm.mm [mA], Current value: nn.nn [mA])

## 2. Note for Handling the Laser Pick-Up

The protection for the damage of laser diode.
If you want to change the optical device unit from any other units, you must keep the following.
(1) It should be done at the desk already took measures the static electricity in care of removing the OPU's (Optical device unit) connector cable.
(2) Workers should be put on the "Earth Band".
(3) It should be done to add the solder to the short land to prevent the broken Laser diode before removing the 24P FFC cable.
(4) Don't touch OPU's connector parts carelessly.

## 3. Replacement of the Laser Pick-up (Traverse Unit)

Check the Iop (Laser drive current)
If the present Iop (current) value exceeds.+150% of the initial value, replace the Traverse unit (Laser Pick-up) with a new one.

## 1. Iop 値の確認方法

レーザー駆動電流を確認する場合は、テストモードのレーザー ON/OFF (CD/DVD) モードを選択して、DVD レーザーまたは CD レーザーの Iop 値を確認します。
（詳細は 19 ページ、テストモード参照）

| FL 管の表示 (13 桁の表示部 ) | | | | | | | | | | | | |
|---|---|---|---|---|---|---|---|---|---|---|---|---|
| 1 | 2 | 3 | 4 | 5 | 6 | 7 | 8 | 9 | 10 | 11 | 12 | 13 |
| T | 2 | | L | a | s | e | r | O | n | O | f | f |

### 1.1. DVD レーザー電流確認

(1) レーザー電流値を表示する場合は、SKIP REV, SKIP FWD ボタンを押し、T22 を選択します。
(2) 現在の Iop 値 (nnnn) を確認します。

| FL 管の表示 (13 桁の表示部 ) | | | | | | | | | | | | |
|---|---|---|---|---|---|---|---|---|---|---|---|---|
| 1 | 2 | 3 | 4 | 5 | 6 | 7 | 8 | 9 | 10 | 11 | 12 | 13 |
| T | 2 | 2 | — | m | m | m | m | — | n | n | n | n |

( ー：消灯、DVD レーザー、初期値：mm.mm[mA], 現在値：nn.nn [mA])

### 1.2. CD レーザー電流確認

(1) レーザー電流値を表示する場合は、SKIP REV, SKIP FWD ボタンを押し、T21 を選択します。
(2) 現在の Iop 値 (nnnn) を確認します。

| FL 管の表示 (13 桁の表示部 ) | | | | | | | | | | | | |
|---|---|---|---|---|---|---|---|---|---|---|---|---|
| 1 | 2 | 3 | 4 | 5 | 6 | 7 | 8 | 9 | 10 | 11 | 12 | 13 |
| T | 2 | 1 | — | m | m | m | m | — | n | n | n | n |

( ー：消灯、ＣＤ レーザー、初期値：mm.mm[mA], 現在値：nn.nn[mA])

## 2. レーザーピックアップの取扱注意

レーザーダイオードの破壊防止。
光素子ユニットを交換するときは、以下を遵守してください。
(1) 光素子ユニットの接続ケーブルをはずすときは、静電対策を行ったデスク上で作業してください。
(2) 作業者は、リストストラップを使用してください。
(3) レーザーダイオードの破壊防止のため、24P FFC ケーブルをはずす前にランドを半田付けショートしてください。
(4) 光素子ユニットのコネクタ部に触れないでください。

## 3. レーザーピックアップ ( トラバースユニット ) の交換

Iop( レーザー駆動電流）をチェックします。
現在の Iop 値が初期値の 150%を越えている場合、トラバースユニット（レーザーピックアップ）を交換してください。

## 4. Rewriting the default value of the laser current

To rewrite the default value of the laser current, press the PLAY button for at least 5 seconds while the CD or DVD laser current is displayed, then press the SKIP FWD or SKIP REV button to select T23. (For details, see "Iop checked Method" on page 13.)
If the PLAY button is pressed while T23 is displayed, the current value is displayed at "mmmm" and stored in the EEPROM.

| FL Display (The display part of 13 digits) | | | | | | | | | | | | |
|---|---|---|---|---|---|---|---|---|---|---|---|---|
| 1 | 2 | 3 | 4 | 5 | 6 | 7 | 8 | 9 | 10 | 11 | 12 | 13 |
| T | 2 | 3 | — | m | m | m | m | — | — | — | — | — |

## 4. レーザー電流初期値の書き換え方法

レーザー電流の初期値を書き換えるには、CD または DVD レーザー電流が表示されている時に PLAY ボタンを 5 秒以上押し、次に SKIP FWD ボタンまたは SKIP REV ボタンを押して T23 を選択します。（詳細は 13 ページ、Iop 値の確認方法参照）

T23 表示時に PLAY ボタンを押と、mmmm 部に現在値を表示し、EEPROM に保存します。

| FL 管の表示 (13 桁の表示部 ) | | | | | | | | | | | | |
|---|---|---|---|---|---|---|---|---|---|---|---|---|
| 1 | 2 | 3 | 4 | 5 | 6 | 7 | 8 | 9 | 10 | 11 | 12 | 13 |
| T | 2 | 3 | — | m | m | m | m | — | — | — | — | — |

## 5. Resetting the accumulated laser on time

To clear the accumulated laser on time, press the PLAY button while the accumulated laser on time is displayed (TB1, TB2 : For details, see "Test Mode" on page 19.) until "＊" appears at the fourth position, then press the SKIP FWD or SKIP REV button to select TB3.
If the PLAY button is pressed while TB3 is displayed, the accumulated laser on time of CD and DVD is cleared.
When TB1 or TB2 is selected with the SKIP FWD or SKIP REV button, "nnnnnnn" is displayed as 0 so you can check.

| FL Display (The display part of 13 digits) | | | | | | | | | | | | |
|---|---|---|---|---|---|---|---|---|---|---|---|---|
| 1 | 2 | 3 | 4 | 5 | 6 | 7 | 8 | 9 | 10 | 11 | 12 | 13 |
| T | B | Y | — | — | — | n | n | n | n | n | n | n |

( ー : Off, Y：1: CD, 2: DVD, nnnnnnn: Hour [h])

## 5. レーザー ＯN 累積時間のリセット方法

レーザーＯN 累積時間をクリアするには、レーザーＯN 累積時間表示 (TB1,TB2) の時（詳細は 19 ページ、テストモード参照）に PLAY ボタンを 4 桁目に ' ＊ ' が表示されるまで押し、SKIP REV ボタンまたは SKIP FWD ボタンを押し TB3 を表示させます。

TB3 表示時に PLAY ボタンを押すと、CD 及び DVD レーザーＯN 累積時間をクリアします。

SKIP REV ボタン SKIP FWD ボタンで TB1 または TB2 を選択すると、nnnnnnn 部が 0 表示となり確認できます。

| FL 管の表示 (13 桁の表示部 ) | | | | | | | | | | | | |
|---|---|---|---|---|---|---|---|---|---|---|---|---|
| 1 | 2 | 3 | 4 | 5 | 6 | 7 | 8 | 9 | 10 | 11 | 12 | 13 |
| T | B | Y | — | — | — | n | n | n | n | n | n | n |

( ー：消灯、Y：1: CD, 2: DVD、nnnnnnn：時間 [h])

# How to Replace Traverse Unit

## 1. Preparing for Replacement

(1) Removing Clamp Base Damper
Remove 4 pcs of 2.6mm machine screw (a), and detach the Clamp Base Damper upward.

(2) Removing Clamp Base
Remove 2 pcs of 3mm P-tight screw (b), and detach the Clamp Base upward.

(3) Ejecting Loader
Through the left rectangular hole of the Mechanism Unit, push the slider with a ruler or driver unit the Traverse portion lowers and the Loader comes out a little.

(4) Removing Loader
- Remove 2 pcs of 3mm P-tight screw (c) on the Loader Holder left.
- Remove 2 pcs of 3mm P-tight screw (d) on the Loader Holder right, then pull up the Bearing Plate.
- Fully pull out the Loader forward, and lift up to take it out.

(5) Shorting Pickup
To protect the Pickup from static electricity, short-circuit 1 positions as shown in figure.

(6) Removing Main P.W.B. Ass'y
Remove 3 pcs of 3mm P-tight screw (e), and detach the Main P.W.B. Ass'y downward.

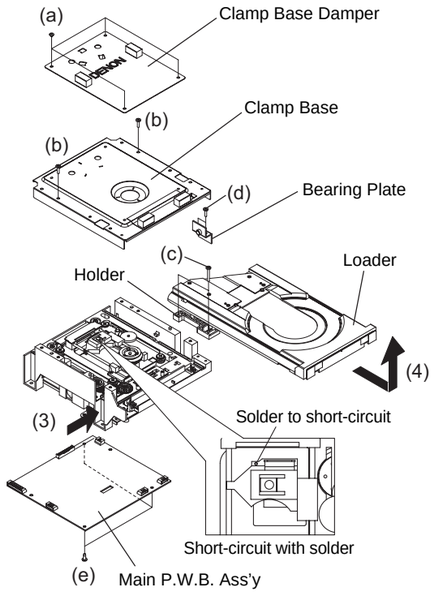


## 2. Replacing Traverse Unit

(1) Removing Wires
- CX241: 24P-FFC for Pickup
- CX151: 15P-FFC for Spindle
- CX051: 5P-PH wire for PU Side

(2) Removing Traverse Unit
Remove 4 pcs of special screw (f) and dampers, then take out the Traverse Unit upward.

(3) Mounting Traverse Unit
Mount the Traverse Unit following the reverse order.

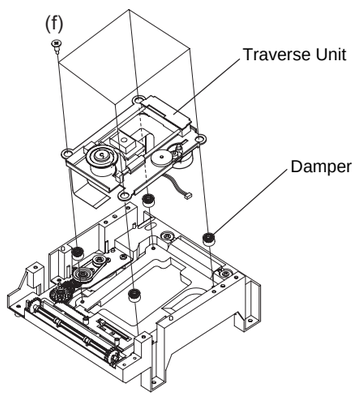


# トラバースユニットの交換方法

## 1. トラバースユニット交換準備

(1) クランプベースダンパーのはずしかた
2.6mm マシンネジ (a) 4 本をずして、クランプベースダンパーを上へはずします。

(2) クランプベースのはずしかた
3mmP タイトネジ (b) 2 本をはずして、クランプベースを上へはずします。

(3) ローダーを開く
メカユニットの左側角孔より、スライダーを定規やドライバーでトラバース部が下がってローダーが少し開くまで押します。

(4) ローダーのはずしかた
・ローダー左のホルダー部より 3mmP タイトネジ (c) 2 本をはずします。
・ローダー右側より 3mmP タイトネジ (d) 2 本をはずし、ベアリングプレートを上へはずします。
・ローダーを前面へ引き出し、止まった所で上へはずします。

(5) ピックアップのショート
トラバースユニットのピックアップの静電保護のため、1 箇所ショートします。
（ショート箇所は、右図参照）

(6) メイン基板 ASS'Y のはずしかた
3mmP タイトネジ (e) 3 本をはずし、基板を下へはずします。

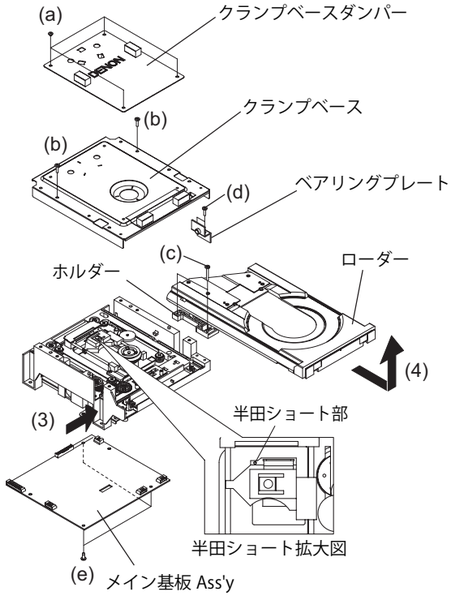


## 2. トラバースユニットの交換

(1) トラバースユニットのワイヤーをはずす
・CX241：ピック用 24P-FFC
・CX151：スピンドル用 15P-FFC
・CX051：PU スライド用 5P-PH ワイヤー

(2) トラバースユニットをはずす
特殊ネジ (f) 4 本とダンパー 4 個をはずし、トラバースユニットを上にはずします。

(3) トラバースユニットの取り付け
逆の手順で、トラバースユニットを取り付けます。

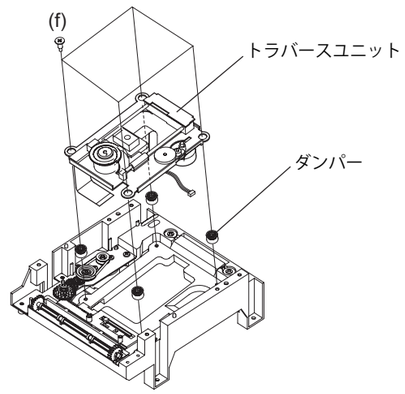

## 3. Installing Loader

(1) Inserting Loader
Set and push the Loader to the arrow direction until it stops. When installing the Loader, move Plate Gear to right beforehand so as that the boss of the Plate Gear fits in the backside groove of the Loader. (See figure right)

(2) Fixing Loader
Fix the Loader with each 2 screws (c) and (d).

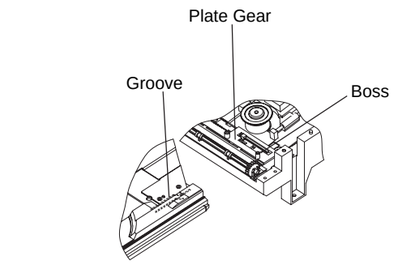


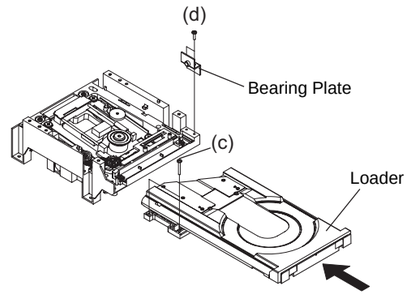


## 4. Assembly (1)

(1) Assembling Main P.W.B. Ass'y
Fix the Main P.W.B. Ass'y with 3 pcs of 3mm P-tight screw (e).

(2) Removing Pickup-short Solder
After connecting 24P-FFC of the Pickup with P.W.B., remove solder from 1 shorted positions.

(3) Temporary Positioning Clamp Base
To protect your eyes from laser light, put the Clamp Base temporarily.

(4) Positioning up Traverse Unit
Connect the following wires of the Mechanism Unit, and operate it.

• CY132: 13P-PH wire for power
• CX212: 21P-FFC wire from Display P.W.B.

Turn on the power to the unit, and press "OPEN/CLOSE" button to close the Loader.
The Traverse Unit rises up. (display: 0h00m00s)
Pull out Loader forward, and life up to take it out.

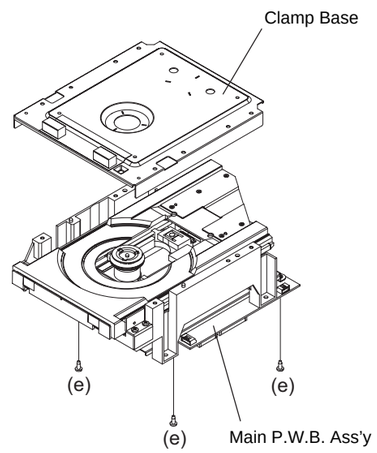


## 3. ローダーの組み立て

(1) ローダーの挿入
ローダーを矢印の方向へ止まるまで押しこみます。
ローダーを組み込み時、プレートギアのボスがトレイ裏面の溝に合うようにプレートギアを右側へ寄せておきます。
（右図参照）

(2) ローダーの取り付け
(c)、(d) のネジ各 2 本を取り付けます。

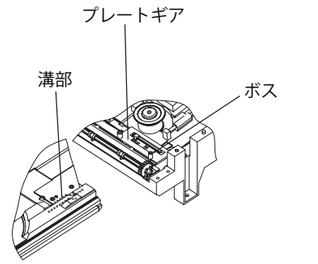


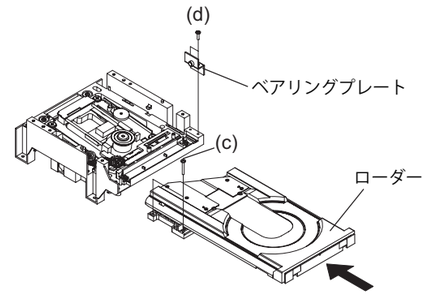


## 4. 組み立て（1）

(1) メイン基板 ASS'Y の取り付け
3mm P タイトネジ (e) 3 本で基板を取り付けます。

(2) ピックアップのショートをはずす
ピックアップの 24PFFC を基板へ接続後、1 箇所のショートをはずします。

(3) クランプベースの仮置き
レーザーから目を保護するため、クランプベースを仮置きします。

(4) トラバースユニットをアップする
メカユニットの下記ワイヤーを接続し、メカを動作させます。

・CY132：電源用の 13P-PH ワイヤー接続
・CX212：ディスプレイ基板からの 21P-FFC ワイヤー接続
セットの電源を入れ、ローダー開閉ボタンで、CLOSE させます。
トラバースユニットがアップします。
(0h00m00s：表示)
ローダーを前後に引き出し、止まったところで上へはずします。

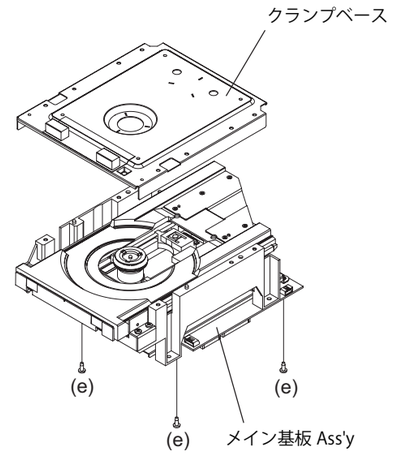

## 5. Assembly (2)

(1) Attaching Tape to Clamp Base Damper
Attach acetate cloth tape to 3 projections of the Clamp Base Damper backside.

(2) Assembling Clamp Base
Set the Clamp Base Damper with positioning for clamper by 3 projections.
Fix the Clamp Base with 6 pcs of 3mm -tight screw (b).

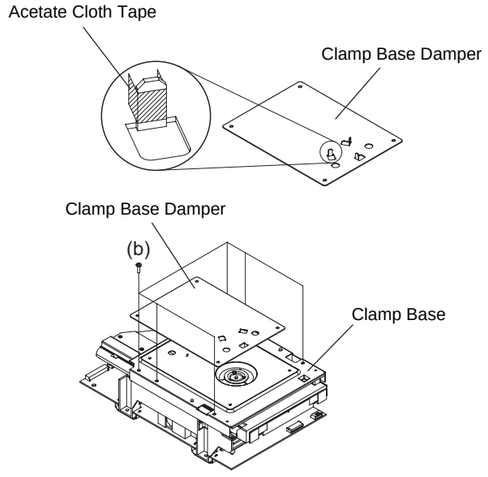


## 6. Assembly (3)

(1) Detaching Tape from Clamp Base Damper
Detach acetate cloth tape from 3 projections of the Clamp Base Damper backside.

(2) Assembling Clamp Base Damper
Set the Clamp Base Damper to the Clamp Base contrary to the direction set in step above.
Fix the Clamp Base Damper with 4 pcs of 3mm S-tight screw (a).

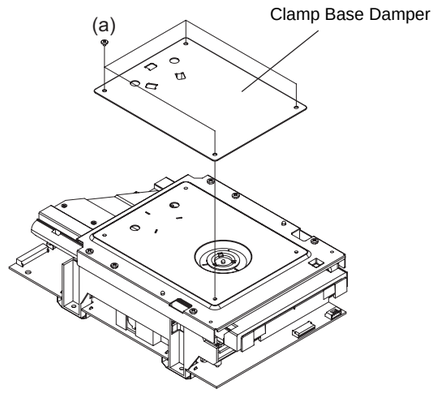


## 5. 組み立て（2）

(1) クランプベースダンパーへのアセクロ貼り付け
クランプベースダンパー裏面の突起 3 箇所へアセテートクロステープを貼り付けます。

(2) クランプベースの取り付け
クランプベースダンパーを挿入し、3 箇所の突起でクランパーの位置決めをおこないます。3mmP タイトネジ (b) 6 本で、クランプベースを取り付けます。

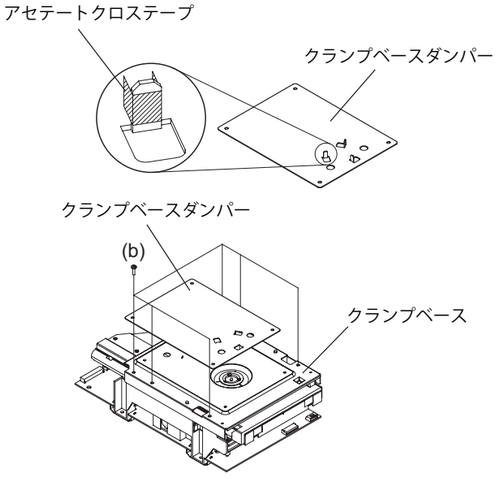


## 6. 組み立て（3）

(1) クランプベースダンパーからアセクロをはがす
クランプベースダンパー裏面の突起 3 箇所からアセテートクロステープをはがします。

(2) クランプダンパーベースの取り付け
クランプベースダンパーを、クランプベースに先程と反対向きに挿入します。3mmS タイトネジ (a) 4 本で、クランプベースダンパーを取り付けます。

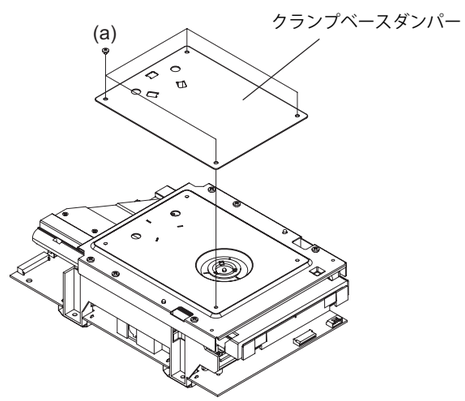

# SERVICE MODE

## 1. Aging Mode

### (1) preparation

(a) Equipment used: Any one of DVD Karaoke Disc (containing more than 10 titles).

(b) Unit setting : No spec other than the following procedure (Aging mode).
At the tray open status, press the “POWER” button to turn on the power while pressing the “PLAY” and “OPEN/CLOSE” buttons for DVD operation simultaneously. ▶❚❚ mark on the FL lights, and the unit is set to the heat run mode.

### (2) procedure

(a) According the above, set to the aging mode.

(b) Set a DVD Karaoke disc to the tray and press the “PLAY” button once. ▶❚❚ mark on the FL blinks, and aging operation (after playback title-1 and title-10 of the disc, the tray open/close is made automatically, then playback the title-1 again) starts.
This aging operation continues automatically until it is stopped or it stops caused by an error. In case of some error in DVD, the following error messages are displayed on the FL.

| No. | Error contents | FL display |
|---|---|---|
| 1 | Tray Error | ERROR 01 |
| 2 | Bad Disc | ERROR 02 |
| 3 | Search Error | ERROR 03 |
| 4 | Read Error | ERROR 04 |

## 2. Initial Setting Mode

### (1) Preparation

(a) Equipment used: None

(b) Unit setting: No spec other than the following procedure.

### (2) Procedure

(a) Initialize the DVD player when µcom, peripheral parts of µcom, or Main P.W.B. has been replaced in servicing.

(b) Carry out the following to restore factory setting mode.
At the player stop condition, press 2 buttons for DVD operation (“PLAY” and “ ▶▶❙ SKIP FWD”) until “INITIALIZE” appears and disappears in the FL.
(“Initialized” appears and disappears on the TV screen.)

(c) All user setting will be lost and its factory setting will be restored when this initialization is made. Be sure to memorize your setting for restoring again after the initialization.

## 3. µcom Firm Check Mode

### (1) Preparation

(a) Equipment used: None

(b) Unit setting: No spec other than the following procedure.

### (2) Procedure

(a) Press the “POWER” button to turn on the power while pressing the “PLAY” and “OPEN/CLOSE” buttons for DVD operation simultaneously.

(b) DVD µcom and other µcom firm check mode.
This mode is for displaying the status of each µcom employed.
- Push remote contraller “3265”.
- DVD µcom firm: Press the “MENU” button.
- Each time the “MENU” button on the remote control unit is pressed, µcom firm is displayed one after another.
Ex.: [BE 8284, MAKE DAY 522, DSP 8250, IP 060621]

# サービスモードについて

## 1. エージングモード

### (1) 準備

(a) 使用機器：DVD カラオケディスク（10 タイトル以上の物）。

(b) 本体設定：下記設定以外規定無。
（エージングモード）
トレイを開けた状態で DVD ユニットの「PLAY ボタン」+「OPEN/CLOSE ボタン」を同時押ししながら「電源ボタン」を押してセットの電源を入れると、FL 管の ▶❚❚ マークが点灯し、ヒートランモードに設定される。

### (2) 手順

(a) 上記手順でエージングモードに設定する。

(b) トレイに DVD カラオケディスクを入れ、「PLAY ボタン」を 1 回押して、FL 管の ▶❚❚ マークが点滅になると、「ディスクのタイトル 1 とタイトル 10 を再生した後、トレイを自動で開 / 閉し、再度タイトル 1 の再生を行う。」エージング動作になります。停止させるか、エラーにて停止するまでこの動作を自動で繰り返します。DVD 部にエラーが発生した場合は、FL 管に下表のエラーが表示されます。

| No. | エラー内容 | FL 管表示 |
|---|---|---|
| 1 | トレイエラー | ERROR 01 |
| 2 | 不良ディスク | ERROR 02 |
| 3 | サーチエラー | ERROR 03 |
| 4 | リードエラー | ERROR 04 |

## 2. 初期設定モード

### (1) 準備

(a) 使用機器：無

(b) 本体設定：下記手順以外規定無。

### (2) 手順

(a) サービスにて、マイコンやマイコン周辺部分やメイン基板を交換した場合は、ＤＶＤ プレーヤーの初期化を行ってください。

(b) セットの初期化を下記の手順で行い、工場出荷モードに設定する。
セットが停止状態にて、ＤＶＤ 操作部の「PLAY ボタン」+「 ▶▶❙ (SKIP FWD) ボタン」の同時押しを ＦＬ 管に "INITIALIZE" が表示され消えるまで押します。（ＴＶ 画面には”初期化しました”が表示され消えます。）

(c) 初期化を行うとお客様が設定した内容が工場出荷状態に戻りますので、あらかじめ設定内容を控えておき初期化後に再設定してください。

## 3. マイコンファームチェックモード

### (1) 準備

(a) 使用機器：無

(b) 本体設定：下記手順以外規定無。

### (2) 手順

(a) ＤＶＤ 操作部の「PLAY ボタン」と「OPEN/CLOSE ボタン」を同時押ししながらセットの「電源ボタン」を押し電源を入れます。

(b) ＤＶＤ マイコン及びその他マイコンのファーム確認モード。
搭載されている各マイコンのファーム状態を表示します。
- 数字キーで「3265」と入力します。
- ＤＶＤ マイコンのファーム：リモコンの「メニューボタン」を押します。
- リモコンのメニューボタンを押すたびにマイコンファームを次々と表示します。
表示例：〔BE 8284 、MAKE DAY 522 、DSP 8250 、IP 060621〕

# 4. Test mode

## (1) Entering the test mode

To enter the test mode, press the STOP and SKIP FWD buttons simultaneously while in the heat run mode.
Basically, enter the test mode while in the stop mode after the disc is loaded.
(The heat run mode is entered by pressing the OPEN/CLOSE and PLAY buttons simultaneously to turn on the AC power. When the heat run mode is set, the PLAY and PAUSE indicators light.)

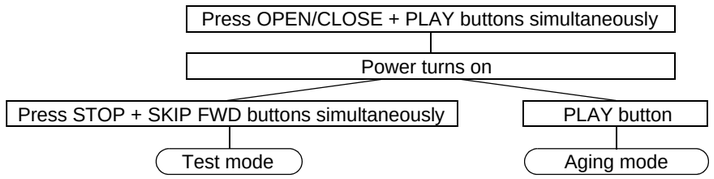


FL tube display when test mode entered

| FL Display (The display part of 13 digits) | | | | | | | | | | | | |
|---|---|---|---|---|---|---|---|---|---|---|---|---|
| 1 | 2 | 3 | 4 | 5 | 6 | 7 | 8 | 9 | 10 | 11 | 12 | 13 |
| | | T | E | S | T | | M | O | D | E | | |

## (2) Selecting the mode

The following modes are available.

(1) FL tube lighting mode : T0
(2) Tray open/close mode : T1
(3) Laser on/off (CD/DVD) mode : T2
(4) Servo adjustment value display mode : T3
(5) Servo properties measurement mode : TA
(6) Trace mode (error rate display) : T7
(7) Accumulated laser on time : TB
(8) Color bar output mode : TC
(9) Monitor terminal setting mode : TD
(10) SACD watermark signal quality checking mode : TE
(11) Digital video circuitry flash ROM writing mode : TF

① When the SKIP FWD button is pressed after entering the test mode, the display switches in the order: T0, T1, T2, T3, T7, TA, TB, TC, TD, TE, TF, T0 …

| FL Display (The display part of 13 digits) | | | | | | | | | | | | |
|---|---|---|---|---|---|---|---|---|---|---|---|---|
| 1 | 2 | 3 | 4 | 5 | 6 | 7 | 8 | 9 | 10 | 11 | 12 | 13 |
| T | 0 | | F | L | | D | i | s | p | l | a | y |

| FL Display (The display part of 13 digits) | | | | | | | | | | | | |
|---|---|---|---|---|---|---|---|---|---|---|---|---|
| 1 | 2 | 3 | 4 | 5 | 6 | 7 | 8 | 9 | 10 | 11 | 12 | 13 |
| T | 1 | | O | p | e | n | / | C | l | o | s | e |

| FL Display (The display part of 13 digits) | | | | | | | | | | | | |
|---|---|---|---|---|---|---|---|---|---|---|---|---|
| 1 | 2 | 3 | 4 | 5 | 6 | 7 | 8 | 9 | 10 | 11 | 12 | 13 |
| T | 2 | | L | a | s | e | r | O | n | O | f | f |

| FL Display (The display part of 13 digits) | | | | | | | | | | | | |
|---|---|---|---|---|---|---|---|---|---|---|---|---|
| 1 | 2 | 3 | 4 | 5 | 6 | 7 | 8 | 9 | 10 | 11 | 12 | 13 |
| T | 3 | | S | e | r | v | o | | A | d | j | |

| FL Display (The display part of 13 digits) | | | | | | | | | | | | |
|---|---|---|---|---|---|---|---|---|---|---|---|---|
| 1 | 2 | 3 | 4 | 5 | 6 | 7 | 8 | 9 | 10 | 11 | 12 | 13 |
| T | 7 | | T | r | a | c | e | | M | o | d | e |

| FL Display (The display part of 13 digits) | | | | | | | | | | | | |
|---|---|---|---|---|---|---|---|---|---|---|---|---|
| 1 | 2 | 3 | 4 | 5 | 6 | 7 | 8 | 9 | 10 | 11 | 12 | 13 |
| T | A | | F | o | c | u | s | T | r | a | c | k |

# 4. テストモード

## (1) テストモードの設定

テストモードの設定はヒートランモード時に STOP ボタンと SKIP FWD ボタンを同時押しで行う。
基本的にディスクローディング後の停止状態でテストモードに設定する。
( ヒートランモードの設定は OPEN/CLOSE ボタンと PLAY ボタンを同時押ししながらセットの電源を入れる。
ヒートランモードになると PLAY インジケータと PAUSE インジケータが点灯する。)

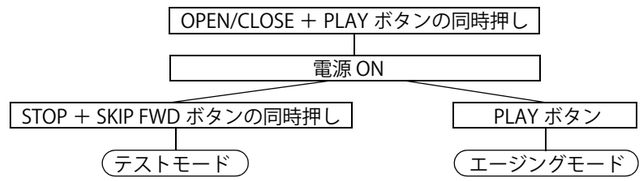


テストモード設定時の FL 管表示

| FL 管の表示 (13 桁の表示部 ) | | | | | | | | | | | | |
|---|---|---|---|---|---|---|---|---|---|---|---|---|
| 1 | 2 | 3 | 4 | 5 | 6 | 7 | 8 | 9 | 10 | 11 | 12 | 13 |
| | | T | E | S | T | | M | O | D | E | | |

## (2) モードの選択

モードには、次のモードがある。

(1) FL 管点灯モード : T0
(2) トレイ OPEN/CLOSE モード : T1
(3) レーザー ON/OFF(CD/DVD) モード : T2
(4) サーボ調整値表示モード : T3
(5) サーボ特性測定モード : TA
(6) トレースモード ( エラーレート表示 ) : T7
(7) レーザー ＯＮ 累積時間 : TB
(8) カラーバー出力モード : TC
(9) モニタ端子設定モード : TD
(10) SACD ウォーターマーク信号品質確認モード : TE
(11) DIGITAL VIDEO 回路ﾌﾗｯｼｭ ROM 書込みモード : TF

①テストモード中に SKIP FWD ボタンを押すと、T0,T1,T2,T3,T7,TA,TB,TC,TD,TE,TF,T0…の順に表示される。

| FL 管の表示 (13 桁の表示部 ) | | | | | | | | | | | | |
|---|---|---|---|---|---|---|---|---|---|---|---|---|
| 1 | 2 | 3 | 4 | 5 | 6 | 7 | 8 | 9 | 10 | 11 | 12 | 13 |
| T | 0 | | F | L | | D | i | s | p | l | a | y |

| FL 管の表示 (13 桁の表示部 ) | | | | | | | | | | | | |
|---|---|---|---|---|---|---|---|---|---|---|---|---|
| 1 | 2 | 3 | 4 | 5 | 6 | 7 | 8 | 9 | 10 | 11 | 12 | 13 |
| T | 1 | | O | p | e | n | / | C | l | o | s | e |

| FL 管の表示 (13 桁の表示部 ) | | | | | | | | | | | | |
|---|---|---|---|---|---|---|---|---|---|---|---|---|
| 1 | 2 | 3 | 4 | 5 | 6 | 7 | 8 | 9 | 10 | 11 | 12 | 13 |
| T | 2 | | L | a | s | e | r | O | n | O | f | f |

| FL 管の表示 (13 桁の表示部 ) | | | | | | | | | | | | |
|---|---|---|---|---|---|---|---|---|---|---|---|---|
| 1 | 2 | 3 | 4 | 5 | 6 | 7 | 8 | 9 | 10 | 11 | 12 | 13 |
| T | 3 | | S | e | r | v | o | | A | d | j | |

| FL 管の表示 (13 桁の表示部 ) | | | | | | | | | | | | |
|---|---|---|---|---|---|---|---|---|---|---|---|---|
| 1 | 2 | 3 | 4 | 5 | 6 | 7 | 8 | 9 | 10 | 11 | 12 | 13 |
| T | 7 | | T | r | a | c | e | | M | o | d | e |

| FL 管の表示 (13 桁の表示部 ) | | | | | | | | | | | | |
|---|---|---|---|---|---|---|---|---|---|---|---|---|
| 1 | 2 | 3 | 4 | 5 | 6 | 7 | 8 | 9 | 10 | 11 | 12 | 13 |
| T | A | | F | o | c | u | s | T | r | a | c | k |

| FL Display (The display part of 13 digits) | | | | | | | | | | | | |
|---|---|---|---|---|---|---|---|---|---|---|---|---|
| 1 | 2 | 3 | 4 | 5 | 6 | 7 | 8 | 9 | 10 | 11 | 12 | 13 |
| T | B | | L | a | s | e | r | O | n | T | i | m |

| FL Display (The display part of 13 digits) | | | | | | | | | | | | |
|---|---|---|---|---|---|---|---|---|---|---|---|---|
| 1 | 2 | 3 | 4 | 5 | 6 | 7 | 8 | 9 | 10 | 11 | 12 | 13 |
| T | C | | C | o | l | o | r | | B | a | r | |

| FL Display (The display part of 13 digits) | | | | | | | | | | | | |
|---|---|---|---|---|---|---|---|---|---|---|---|---|
| 1 | 2 | 3 | 4 | 5 | 6 | 7 | 8 | 9 | 10 | 11 | 12 | 13 |
| T | D | | M | o | n | i | t | o | r | | | |

| FL Display (The display part of 13 digits) | | | | | | | | | | | | |
|---|---|---|---|---|---|---|---|---|---|---|---|---|
| 1 | 2 | 3 | 4 | 5 | 6 | 7 | 8 | 9 | 10 | 11 | 12 | 13 |
| T | E | | S | A | C | D | | | | | | |

| FL Display (The display part of 13 digits) | | | | | | | | | | | | |
|---|---|---|---|---|---|---|---|---|---|---|---|---|
| 1 | 2 | 3 | 4 | 5 | 6 | 7 | 8 | 9 | 10 | 11 | 12 | 13 |
| T | F | | R | S | 2 | 3 | 2 | C | | S | E | L |

② When the SKIP REV button is pressed, the display switches in the opposite order from ① above, starting from the current position (for example, if currently at TA, it switches as follows: T7, T3, T2, T1, T0, TF, TE, TD, TC, TB ⋯).

| FL Display (The display part of 13 digits) | | | | | | | | | | | | |
|---|---|---|---|---|---|---|---|---|---|---|---|---|
| 1 | 2 | 3 | 4 | 5 | 6 | 7 | 8 | 9 | 10 | 11 | 12 | 13 |
| T | 7 | | T | r | a | c | e | | M | o | d | e |

| FL Display (The display part of 13 digits) | | | | | | | | | | | | |
|---|---|---|---|---|---|---|---|---|---|---|---|---|
| 1 | 2 | 3 | 4 | 5 | 6 | 7 | 8 | 9 | 10 | 11 | 12 | 13 |
| T | 3 | | S | e | r | v | o | | A | d | j | |

| FL Display (The display part of 13 digits) | | | | | | | | | | | | |
|---|---|---|---|---|---|---|---|---|---|---|---|---|
| 1 | 2 | 3 | 4 | 5 | 6 | 7 | 8 | 9 | 10 | 11 | 12 | 13 |
| T | 2 | | L | a | s | e | r | O | n | O | f | f |

| FL 管の表示 (13 桁の表示部 ) | | | | | | | | | | | | |
|---|---|---|---|---|---|---|---|---|---|---|---|---|
| 1 | 2 | 3 | 4 | 5 | 6 | 7 | 8 | 9 | 10 | 11 | 12 | 13 |
| T | B | | L | a | s | e | r | O | n | T | i | m |

| FL 管の表示 (13 桁の表示部 ) | | | | | | | | | | | | |
|---|---|---|---|---|---|---|---|---|---|---|---|---|
| 1 | 2 | 3 | 4 | 5 | 6 | 7 | 8 | 9 | 10 | 11 | 12 | 13 |
| T | C | | C | o | l | o | r | | B | a | r | |

| FL 管の表示 (13 桁の表示部 ) | | | | | | | | | | | | |
|---|---|---|---|---|---|---|---|---|---|---|---|---|
| 1 | 2 | 3 | 4 | 5 | 6 | 7 | 8 | 9 | 10 | 11 | 12 | 13 |
| T | D | | M | o | n | i | t | o | r | | | |

| FL 管の表示 (13 桁の表示部 ) | | | | | | | | | | | | |
|---|---|---|---|---|---|---|---|---|---|---|---|---|
| 1 | 2 | 3 | 4 | 5 | 6 | 7 | 8 | 9 | 10 | 11 | 12 | 13 |
| T | E | | S | A | C | D | | | | | | |

| FL 管の表示 (13 桁の表示部 ) | | | | | | | | | | | | |
|---|---|---|---|---|---|---|---|---|---|---|---|---|
| 1 | 2 | 3 | 4 | 5 | 6 | 7 | 8 | 9 | 10 | 11 | 12 | 13 |
| T | F | | R | S | 2 | 3 | 2 | C | | S | E | L |

② SKIP REV ボタンを押すと現在表示されている点から①の逆順 ( 現在表示されている点が TA であれば、T7,T3,T2,T1,T0,TF,TE,TD,TC,TB⋯の順 ) に表示される。

| FL 管の表示 (13 桁の表示部 ) | | | | | | | | | | | | |
|---|---|---|---|---|---|---|---|---|---|---|---|---|
| 1 | 2 | 3 | 4 | 5 | 6 | 7 | 8 | 9 | 10 | 11 | 12 | 13 |
| T | 7 | | T | r | a | c | e | | M | o | d | e |

| FL 管の表示 (13 桁の表示部 ) | | | | | | | | | | | | |
|---|---|---|---|---|---|---|---|---|---|---|---|---|
| 1 | 2 | 3 | 4 | 5 | 6 | 7 | 8 | 9 | 10 | 11 | 12 | 13 |
| T | 3 | | S | e | r | v | o | | A | d | j | |

| FL 管の表示 (13 桁の表示部 ) | | | | | | | | | | | | |
|---|---|---|---|---|---|---|---|---|---|---|---|---|
| 1 | 2 | 3 | 4 | 5 | 6 | 7 | 8 | 9 | 10 | 11 | 12 | 13 |
| T | 2 | | L | a | s | e | r | O | n | O | f | f |

### (3) Setting the mode

With the mode selected, press the PLAY button to set that mode.

① In the FL tube lighting mode, the FL tube display turns all on and all off. (When "T0" is displayed, the display switches between all on, all off and "T0" repeatedly each time the PLAY button is pressed.)

| FL Display (The display part of 13 digits) | | | | | | | | | | | | |
|---|---|---|---|---|---|---|---|---|---|---|---|---|
| 1 | 2 | 3 | 4 | 5 | 6 | 7 | 8 | 9 | 10 | 11 | 12 | 13 |
| T | 0 | — | — | — | — | — | — | — | — | — | — | — |

( ー : Off)

② In the tray open/close mode, tray opening and closing is executed and the number of times the tray has opened and closed is displayed.

| FL Display (The display part of 13 digits) | | | | | | | | | | | | |
|---|---|---|---|---|---|---|---|---|---|---|---|---|
| 1 | 2 | 3 | 4 | 5 | 6 | 7 | 8 | 9 | 10 | 11 | 12 | 13 |
| T | 1 | — | — | — | — | — | n | n | n | n | n | n |

( ー : Off, n : No. times [DEC])

③ In the laser on/off (CD/DVD) mode, laser on/off control is executed. Press the SKIP REV or SKIP FWD button to display the laser current (T21, T22, T21..).

For the CD laser

| FL Display (The display part of 13 digits) | | | | | | | | | | | | |
|---|---|---|---|---|---|---|---|---|---|---|---|---|
| 1 | 2 | 3 | 4 | 5 | 6 | 7 | 8 | 9 | 10 | 11 | 12 | 13 |
| T | 2 | 1 | — | m | m | m | m | — | n | n | n | n |

( ー : Off, CD laser, Stored data: mm.mm [mA], Current value: nn.nn [mA])

For the DVD laser

| FL Display (The display part of 13 digits) | | | | | | | | | | | | |
|---|---|---|---|---|---|---|---|---|---|---|---|---|
| 1 | 2 | 3 | 4 | 5 | 6 | 7 | 8 | 9 | 10 | 11 | 12 | 13 |
| T | 2 | 2 | — | m | m | m | m | — | n | n | n | n |

( ー : Off, DVD laser, Stored data: mm.mm [mA], Current value: nn.nn [mA])

④ In the servo adjustment value display mode

| FL Display (The display part of 13 digits) | | | | | | | | | | | | |
|---|---|---|---|---|---|---|---|---|---|---|---|---|
| 1 | 2 | 3 | 4 | 5 | 6 | 7 | 8 | 9 | 10 | 11 | 12 | 13 |
| T | X | X | X | – | – | – | – | – | n | n | n | n |

(XXX : Selection mode, n : Adjustment value (HEX))

⑤ In the servo properties measurement mode

| FL Display (The display part of 13 digits) | | | | | | | | | | | | |
|---|---|---|---|---|---|---|---|---|---|---|---|---|
| 1 | 2 | 3 | 4 | 5 | 6 | 7 | 8 | 9 | 10 | 11 | 12 | 13 |
| T | A | Y | — | — | — | — | — | — | — | — | — | — |

(Y : 1:Focus, 2:Tracking)

⑥ In the trace mode (error rate display), select the trace of the innermost circumference of 1 layer.

| FL Display (The display part of 13 digits) | | | | | | | | | | | | |
|---|---|---|---|---|---|---|---|---|---|---|---|---|
| 1 | 2 | 3 | 4 | 5 | 6 | 7 | 8 | 9 | 10 | 11 | 12 | 13 |
| T | 7 | 1 | F | F | F | F | F | F | F | F | F | F |

(F : When address and error rate not set, F is displayed.)

### (3) モードの確定

モードを選択してある状態で PLAY ボタンを押すとモードを確定する。

① FL 管点灯モードの場合、FL 管の全点灯、全消灯する。(T0 表示時に、PLAY ボタンを押すごとに全点灯、全消灯、T0 表示を繰り返す。)

| FL 管の表示 (13 桁の表示部 ) | | | | | | | | | | | | |
|---|---|---|---|---|---|---|---|---|---|---|---|---|
| 1 | 2 | 3 | 4 | 5 | 6 | 7 | 8 | 9 | 10 | 11 | 12 | 13 |
| T | 0 | — | — | — | — | — | — | — | — | — | — | — |

( ー：消灯 )

②トレイ OPEN/CLOSE モードの場合、トレイの オープン　クローズを実行し、オープンクローズした回数を表示する。

| FL 管の表示 (13 桁の表示部 ) | | | | | | | | | | | | |
|---|---|---|---|---|---|---|---|---|---|---|---|---|
| 1 | 2 | 3 | 4 | 5 | 6 | 7 | 8 | 9 | 10 | 11 | 12 | 13 |
| T | 1 | — | — | — | — | — | n | n | n | n | n | n |

( ー：消灯、n：回数 [DEC])

③レーザー ON/OFF(CD/DVD) モードの場合、レーザーの ON/OFF 制御を実行し、レーザー電流を表示する場合は、SKIP REV, SKIP FWD ボタンを押す (T21,T22,T21..)。

CD レーザーの場合

| FL 管の表示 (13 桁の表示部 ) | | | | | | | | | | | | |
|---|---|---|---|---|---|---|---|---|---|---|---|---|
| 1 | 2 | 3 | 4 | 5 | 6 | 7 | 8 | 9 | 10 | 11 | 12 | 13 |
| T | 2 | 1 | — | m | m | m | m | — | n | n | n | n |

( ー：消灯、ＣＤ レーザー、保存ﾃﾞｰﾀ：mm.mm[mA], 現在値：nn.nn[mA])

DVD レーザーの場合

| FL 管の表示 (13 桁の表示部 ) | | | | | | | | | | | | |
|---|---|---|---|---|---|---|---|---|---|---|---|---|
| 1 | 2 | 3 | 4 | 5 | 6 | 7 | 8 | 9 | 10 | 11 | 12 | 13 |
| T | 2 | 2 | — | m | m | m | m | — | n | n | n | n |

( ー：消灯、ＤVD レーザー、保存ﾃﾞｰﾀ：mm.mm[mA], 現在値：nn.nn [mA])

④サーボ調整値表示モード

| FL 管の表示 (13 桁の表示部 ) | | | | | | | | | | | | |
|---|---|---|---|---|---|---|---|---|---|---|---|---|
| 1 | 2 | 3 | 4 | 5 | 6 | 7 | 8 | 9 | 10 | 11 | 12 | 13 |
| T | X | X | X | – | – | – | – | – | n | n | n | n |

(ＸＸＸ: 選択モード、n: 調整値 (HEX))

⑤サーボ特性測定モード

| FL 管の表示 (13 桁の表示部 ) | | | | | | | | | | | | |
|---|---|---|---|---|---|---|---|---|---|---|---|---|
| 1 | 2 | 3 | 4 | 5 | 6 | 7 | 8 | 9 | 10 | 11 | 12 | 13 |
| T | A | Y | — | — | — | — | — | — | — | — | — | — |

(Y： 1 : フォーカス、 2 : トラッキング )

⑥トレースモード ( エラーレート表示 ) の場合は、 1 層内周のトレースを選択する。

| FL 管の表示 (13 桁の表示部 ) | | | | | | | | | | | | |
|---|---|---|---|---|---|---|---|---|---|---|---|---|
| 1 | 2 | 3 | 4 | 5 | 6 | 7 | 8 | 9 | 10 | 11 | 12 | 13 |
| T | 7 | 1 | F | F | F | F | F | F | F | F | F | F |

(F : アドレス及びエラーレートは未確定時、Ｆ を表示する。)

⑦ Displaying the accumulated laser on time (stored in the EEPROM)

| FL Display (The display part of 13 digits) | | | | | | | | | | | | |
|---|---|---|---|---|---|---|---|---|---|---|---|---|
| 1 | 2 | 3 | 4 | 5 | 6 | 7 | 8 | 9 | 10 | 11 | 12 | 13 |
| T | B | Y | — | — | — | n | n | n | n | n | 。 | n |

(Y : 1:CD, 2:DVD, nnnn.n: Time [h])

⑧ Setting the color bar output (using the video encoder function)

| FL Display (The display part of 13 digits) | | | | | | | | | | | | |
|---|---|---|---|---|---|---|---|---|---|---|---|---|
| 1 | 2 | 3 | 4 | 5 | 6 | 7 | 8 | 9 | 10 | 11 | 12 | 13 |
| T | C | Y | — | — | — | — | — | — | — | — | — | — |

(Y : 1: Test pattern off : OFF
2: Test pattern off : ON
3: Reserved (same as Y = 1)

⑨ Setting the test monitor terminal setting

| FL Display (The display part of 13 digits) | | | | | | | | | | | | |
|---|---|---|---|---|---|---|---|---|---|---|---|---|
| 1 | 2 | 3 | 4 | 5 | 6 | 7 | 8 | 9 | 10 | 11 | 12 | 13 |
| T | D | Y | — | Z | Z | — | — | — | — | — | — | — |

(Y : 1: RF signal monitor setting
2: Digital signal monitor setting (MONI 0 and 1)
3: Digital signal monitor setting (MONI 2 and 3)
4: Digital signal monitor setting (MONI 4 and 5)
5: Digital signal monitor setting (MONI 6 and 7)
6: Remaining buffer capacity output setting,
ZZ : When Y = 1: 01 to 06, 09, 0A
When Y = 2: 06 to 08, 0A, 0B, 0C
When Y = 3: 06 to 08, 0A, 0B, 0C
When Y = 4: 07 to 0F
When Y = 5: 07 to 0F)

⑩ Checking the SACD watermark signal quality

| FL Display (The display part of 13 digits) | | | | | | | | | | | | |
|---|---|---|---|---|---|---|---|---|---|---|---|---|
| 1 | 2 | 3 | 4 | 5 | 6 | 7 | 8 | 9 | 10 | 11 | 12 | 13 |
| T | E | Y | — | — | — | — | — | — | x | x | x | x |

(Y : 1: PSP amplitude (Addr = 51h readout)
Hexadecimal, displayed as 2-byte data.
2: Monitor setting (Addr = 38h, Data = 06h setting)
MNIT2 terminal : Sector Detect Error
MNIT1 terminal : PDM Detect
MNIT0 terminal : PSP-DATA OK)

⑪ Setting the digital video flash ROM writing mode (switching to the 232C_UART line)

| FL Display (The display part of 13 digits) | | | | | | | | | | | | |
|---|---|---|---|---|---|---|---|---|---|---|---|---|
| 1 | 2 | 3 | 4 | 5 | 6 | 7 | 8 | 9 | 10 | 11 | 12 | 13 |
| T | F | Y | — | — | — | — | — | — | — | — | — | — |

(Y : 1: Enable digital video flash ROM writing (232C_SEL : H)
2: Disable digital video flash ROM writing (232C_SEL : L)

⑦レーザー ＯＮ 累積時間 (EEPROM に記憶 ) を表示する。

| FL 管の表示 (13 桁の表示部 ) | | | | | | | | | | | | |
|---|---|---|---|---|---|---|---|---|---|---|---|---|
| 1 | 2 | 3 | 4 | 5 | 6 | 7 | 8 | 9 | 10 | 11 | 12 | 13 |
| T | B | Y | — | — | — | n | n | n | n | n | 。 | n |

(Ｙ：1: CD, 2: DVD、nnnn.n : 時間 [h])

⑧カラーバー出力設定する。(VIDEO ENCODER 機能を使用 )

| FL 管の表示 (13 桁の表示部 ) | | | | | | | | | | | | |
|---|---|---|---|---|---|---|---|---|---|---|---|---|
| 1 | 2 | 3 | 4 | 5 | 6 | 7 | 8 | 9 | 10 | 11 | 12 | 13 |
| T | C | Y | — | — | — | — | — | — | — | — | — | — |

(Ｙ：1: Test Pattern : OFF
2: Test Pattern : ON
3: Reserved (Y=1 と同じ )

⑨モニタ端子設定する。

| FL 管の表示 (13 桁の表示部 ) | | | | | | | | | | | | |
|---|---|---|---|---|---|---|---|---|---|---|---|---|
| 1 | 2 | 3 | 4 | 5 | 6 | 7 | 8 | 9 | 10 | 11 | 12 | 13 |
| T | D | Y | — | Z | Z | — | — | — | — | — | — | — |

(Ｙ：1:ＲＦ 信号モニタ設定 ,
2:Digital 信号モニタ設定 (MONI0,1),
3:Digital 信号モニタ設定 (MONI2,3),
4:Digital 信号モニタ設定 (MONI4,5),
5:Digital 信号モニタ設定 (MONI6,7),
6: バッファ残容量出力設定 ,
ＺＺ：Y=1 の時 01 ～ 06,09,0A
Y=2 の時 06 ～ 08,0A,0B,0C
Y=3 の時 06 ～ 08,0A,0B,0C
Y=4 の時 07 ～ 0F
Y=5 の時 07 ～ 0F)

⑩ SACD ウォーターマーク信号の品質を確認する。

| FL 管の表示 (13 桁の表示部 ) | | | | | | | | | | | | |
|---|---|---|---|---|---|---|---|---|---|---|---|---|
| 1 | 2 | 3 | 4 | 5 | 6 | 7 | 8 | 9 | 10 | 11 | 12 | 13 |
| T | E | Y | — | — | — | — | — | — | x | x | x | x |

(Ｙ：1:PSP Amplitude(Addr=51h の読み出し )
16 進、2ﾊﾞｲﾄﾃﾞｰﾀとして表示されます。
2: モニタ設定 (Addr=38h,Data=06h 設定 )
MNIT2 端子：Sector Detect Error
MNIT1 端子：PDM Detect
MNIT0 端子：PSP-DATA OK)

⑪ DIGITAL VIDEO のﾌﾗｯｼｭﾛﾑを書き込みモードに設定する。(232C_UART ﾗｲﾝを切替える )

| FL 管の表示 (13 桁の表示部 ) | | | | | | | | | | | | |
|---|---|---|---|---|---|---|---|---|---|---|---|---|
| 1 | 2 | 3 | 4 | 5 | 6 | 7 | 8 | 9 | 10 | 11 | 12 | 13 |
| T | F | Y | — | — | — | — | — | — | — | — | — | — |

(Ｙ：1：DIGITAL VIDEO ﾌﾗｯｼｭ書込み可能（232C_SEL：H）
2：DIGITAL VIDEO ﾌﾗｯｼｭ書込み不可（232C_SEL：L）

### (4) Change within the mode

Changes within modes are made by pressing the SKIP REV and SKIP FWD buttons while the mode is set.

① In the laser on/off mode

| FL Display (The display part of 13 digits) | | | | | | | | | | | | |
|---|---|---|---|---|---|---|---|---|---|---|---|---|
| 1 | 2 | 3 | 4 | 5 | 6 | 7 | 8 | 9 | 10 | 11 | 12 | 13 |
| T | 2 | X | — | Y | Y | Y | — | — | m | m | m | m |

(X : Selection mode [1, 2, 4], Y : CD or DVD, Stored data: mm.mm [mA])

② In the laser on/off (CD/DVD) mode, laser on/off control is executed and the laser current is displayed.

For the CD laser

| FL Display (The display part of 13 digits) | | | | | | | | | | | | |
|---|---|---|---|---|---|---|---|---|---|---|---|---|
| 1 | 2 | 3 | 4 | 5 | 6 | 7 | 8 | 9 | 10 | 11 | 12 | 13 |
| T | 2 | 1 | — | m | m | m | m | — | n | n | n | n |

( ー : Off, CD laser, Stored data: mm.mm [mA], Current value: nn.nn [mA])

For the DVD laser

| FL Display (The display part of 13 digits) | | | | | | | | | | | | |
|---|---|---|---|---|---|---|---|---|---|---|---|---|
| 1 | 2 | 3 | 4 | 5 | 6 | 7 | 8 | 9 | 10 | 11 | 12 | 13 |
| T | 2 | 2 | — | m | m | m | m | — | n | n | n | n |

( ー : Off, DVD laser, mm.mm [mA], nn.nn [mA])

Laser off

| FL Display (The display part of 13 digits) | | | | | | | | | | | | |
|---|---|---|---|---|---|---|---|---|---|---|---|---|
| 1 | 2 | 3 | 4 | 5 | 6 | 7 | 8 | 9 | 10 | 11 | 12 | 13 |
| T | 2 | 4 | — | — | — | — | — | — | — | — | — | — |

＊ The laser turns off when the laser on/off mode is quit.

③ In the servo adjustment value display mode (See "Table 1 - Servo adjustment value display mode details")

| FL Display (The display part of 13 digits) | | | | | | | | | | | | |
|---|---|---|---|---|---|---|---|---|---|---|---|---|
| 1 | 2 | 3 | 4 | 5 | 6 | 7 | 8 | 9 | 10 | 11 | 12 | 13 |
| T | X | X | X | — | n | n | n | n | n | n | n | n |

(XXX : Selection mode, n: Adjustment value (HEX))

④ In the servo properties measurement mode

| FL Display (The display part of 13 digits) | | | | | | | | | | | | |
|---|---|---|---|---|---|---|---|---|---|---|---|---|
| 1 | 2 | 3 | 4 | 5 | 6 | 7 | 8 | 9 | 10 | 11 | 12 | 13 |
| T | A | Y | — | — | — | — | — | — | — | — | — | — |

(Y : 1: Focus properties, 2: Tracking properties)
Monitor terminal settings:
MONI7 : DIROK
MONI6 : DIRCT
MONI5 : STKC
MONI4 : TKC
MONI3 to 0 : BSDA

⑤ In the trace mode (error rate display) (See "Table 3 - Trace mode details")

| FL Display (The display part of 13 digits) | | | | | | | | | | | | |
|---|---|---|---|---|---|---|---|---|---|---|---|---|
| 1 | 2 | 3 | 4 | 5 | 6 | 7 | 8 | 9 | 10 | 11 | 12 | 13 |
| T | Y | Y | F | F | F | F | F | F | F | F | F | F |

(YY : Selection mode [71 to 94], F: When address and error rate not set, F is displayed.)

### (4) モード内での変更

モードを確定してある状態で SKIP REV ボタン又は SKIP FWD ボタンを押すとモード内での変更を行う。

①レーザー ON/OFF モードの場合

| FL 管の表示 (13 桁の表示部 ) | | | | | | | | | | | | |
|---|---|---|---|---|---|---|---|---|---|---|---|---|
| 1 | 2 | 3 | 4 | 5 | 6 | 7 | 8 | 9 | 10 | 11 | 12 | 13 |
| T | 2 | X | — | Y | Y | Y | — | — | m | m | m | m |

( X : 選択モード [1,2,4]、 Y ： CD or DVD、保存ﾃﾞｰﾀ：mm.mm[mA],)

②レーザー ON/OFF(CD/DVD) モードの場合、レーザーの ON/OFF 制御を実行し、レーザー電流を表示する。

CD レーザーの場合

| FL 管の表示 (13 桁の表示部 ) | | | | | | | | | | | | |
|---|---|---|---|---|---|---|---|---|---|---|---|---|
| 1 | 2 | 3 | 4 | 5 | 6 | 7 | 8 | 9 | 10 | 11 | 12 | 13 |
| T | 2 | 1 | — | m | m | m | m | — | n | n | n | n |

( ー：消灯、ＣＤ レーザー、保存ﾃﾞｰﾀ：mm.mm[mA], 現在値：nn.nn[mA])

DVD レーザーの場合

| FL 管の表示 (13 桁の表示部 ) | | | | | | | | | | | | |
|---|---|---|---|---|---|---|---|---|---|---|---|---|
| 1 | 2 | 3 | 4 | 5 | 6 | 7 | 8 | 9 | 10 | 11 | 12 | 13 |
| T | 2 | 2 | — | m | m | m | m | — | n | n | n | n |

( ー：消灯、ＤＶＤ レーザー、mm.mm[mA], nn.nn[mA])

ﾚｰｻﾞｰ OFF

| FL 管の表示 (13 桁の表示部 ) | | | | | | | | | | | | |
|---|---|---|---|---|---|---|---|---|---|---|---|---|
| 1 | 2 | 3 | 4 | 5 | 6 | 7 | 8 | 9 | 10 | 11 | 12 | 13 |
| T | 2 | 4 | — | — | — | — | — | — | — | — | — | — |

＊ﾚｰｻﾞｰ ON/OFF ﾓｰﾄﾞを抜ける場合は、ﾚｰｻﾞｰを OFF する。

③サーボ調整値表示モードの場合 （表 1 サーボ調整値表示モード詳細 参照）

| FL 管の表示 (13 桁の表示部 ) | | | | | | | | | | | | |
|---|---|---|---|---|---|---|---|---|---|---|---|---|
| 1 | 2 | 3 | 4 | 5 | 6 | 7 | 8 | 9 | 10 | 11 | 12 | 13 |
| T | X | X | X | — | n | n | n | n | n | n | n | n |

( X X X : 選択モード、n: 調整値 (HEX))

④サーボ特性測定モード

| FL 管の表示 (13 桁の表示部 ) | | | | | | | | | | | | |
|---|---|---|---|---|---|---|---|---|---|---|---|---|
| 1 | 2 | 3 | 4 | 5 | 6 | 7 | 8 | 9 | 10 | 11 | 12 | 13 |
| T | A | Y | — | — | — | — | — | — | — | — | — | — |

（Y： 1 : フォーカス特性、 2 : トラッキング特性）
モニタ端子の設定は、
MONI7：DIROK
MONI6：DIRCT
MONI5：STKC
MONI4：TKC
MONI3 ～ 0：BSDA

⑤トレースモード ( エラーレート表示 ) の場合（ 表 3 トレースモード詳細 参照）

| FL 管の表示 (13 桁の表示部 ) | | | | | | | | | | | | |
|---|---|---|---|---|---|---|---|---|---|---|---|---|
| 1 | 2 | 3 | 4 | 5 | 6 | 7 | 8 | 9 | 10 | 11 | 12 | 13 |
| T | Y | Y | F | F | F | F | F | F | F | F | F | F |

( Y Y : 選択モード [71 ～ 94]、 F : アドレス及びエラーレートは未確定時、 F を表示する。)

⑥ In the accumulated laser on time display

| FL Display (The display part of 13 digits) | | | | | | | | | | | | |
|---|---|---|---|---|---|---|---|---|---|---|---|---|
| 1 | 2 | 3 | 4 | 5 | 6 | 7 | 8 | 9 | 10 | 11 | 12 | 13 |
| T | B | Y | — | — | — | n | n | n | n | n | 。 | n |

(Y : 1: CD, 2: DVD, nnnnn.n: Time [h])

To check, select TB1 or TB2 using the SKIP REV and SKIP FWD buttons.

⑦ In the color bar output setting (using the video encoder function)

| FL Display (The display part of 13 digits) | | | | | | | | | | | | |
|---|---|---|---|---|---|---|---|---|---|---|---|---|
| 1 | 2 | 3 | 4 | 5 | 6 | 7 | 8 | 9 | 10 | 11 | 12 | 13 |
| T | C | Y | — | — | — | — | — | — | — | — | — | — |

(Y : 1: Test pattern off
2: Test pattern on
3: Reserved (same as Y = 1)

(1) When Y = 1 (test pattern off)
① Normal operation performed. SD Mode Register 3 (Address 0x44) bit 6 set to 0.

(2) When Y = 2 (test pattern on)
① The video encoder test pattern is output, regardless of whether or not there is a disc.
SD Mode Register 3 (Address 0x44) bit 6 set to 1.
② Output setting: Component/Interlace/480i output.

(3) Y = 3 (Reserved) : Same as when Y = 1.

⑧ In the monitor terminal setting

| FL Display (The display part of 13 digits) | | | | | | | | | | | | |
|---|---|---|---|---|---|---|---|---|---|---|---|---|
| 1 | 2 | 3 | 4 | 5 | 6 | 7 | 8 | 9 | 10 | 11 | 12 | 13 |
| T | D | Y | ＊ | Z | Z | ＊ | — | — | — | — | — | — |

(Y : 1: RF signal monitor setting (ANAMONI 1 and 2)
2: Digital signal monitor setting (MONI 0 and 1)
3: Digital signal monitor setting (MONI 2 and 3)
4: Digital signal monitor setting (MONI 4 and5)
5: Digital signal monitor setting (MONI 6 and 7)
6: Remaining buffer capacity output setting (DRV2)

ZZ : When Y = 1: 01 to 06, 09, 0A
When Y = 2: 06 to 08, 0A, 0B, 0C
When Y = 3: 06 to 08, 0A, 0B, 0C
When Y = 4: 07 to 0F
When Y = 5: 07 to 0F)

4th place: During Y selection, " ＊ " displayed at 4th place.
7th place: During ZZ selection, " ＊ " displayed at 7th place.
When both Y and ZZ are set, " ＊ " displayed at 4th and 7th places.

After selecting Y within the mode using the SKIP REV and SKIP FWD buttons, press the PLAY button once to set.
Use the SKIP REV and SKIP FWD buttons to select ZZ within the mode.

(When set at Y = 1, press the SKIP FWD button to switch in the order 01, 02, 03, 04, 05, 06, 09, 0A, 0C, 01 …, then press the PLAY button once to set. If the SKIP REV and SKIP FWD buttons are pressed after setting, switches to Y within the mode. When Y = 1 is selected, the previously selected ZZ value is displayed.)

The set values are not cleared even when the STOP button is pressed or when the STOP and SKIP FWD buttons are pressed simultaneously.

Remaining buffer capacity: PWM output of the remaining data capacity to the DRV2 terminal.
(Notes: The remaining buffer capacity is the remaining data capacity, not the remaining free space. Also, the DRV2 terminal is also used for tray driving, so when outputting the remaining buffer capacity, be careful not to drive the tray.)

When Y = 2 or 3, if ZZ = 0C is selected, Dfesv (FE stored value) is output to the MONI 1 terminal, Tfesv (TE stored value) is output to the MONI 2 terminal and Dassv (AS stored value) is output to the MONI 3 terminal.

⑥レーザー ＯＮ 累積時間を表示場合

| FL 管の表示 (13 桁の表示部 ) | | | | | | | | | | | | |
|---|---|---|---|---|---|---|---|---|---|---|---|---|
| 1 | 2 | 3 | 4 | 5 | 6 | 7 | 8 | 9 | 10 | 11 | 12 | 13 |
| T | B | Y | — | — | — | n | n | n | n | n | 。 | n |

(Ｙ：1: CD, 2: DVD、nnnn.n: 時間 [h])

確認は、SKIP REV, SKIP FWD で TB1 又は TB2 を選択する。

⑦カラーバー出力設定する場合 (VIDEO ENCODER 機能を使用 )

| FL 管の表示 (13 桁の表示部 ) | | | | | | | | | | | | |
|---|---|---|---|---|---|---|---|---|---|---|---|---|
| 1 | 2 | 3 | 4 | 5 | 6 | 7 | 8 | 9 | 10 | 11 | 12 | 13 |
| T | C | Y | — | — | — | — | — | — | — | — | — | — |

(Ｙ：1: Test Pattern : OFF
2: Test Pattern : ON
3: Reserved (Y=1 と同じ )

(1)Y = 1（Test Pattern : OFF）の時
①通常動作を行う。SD Mode Register 3(Address 0x44) の bit6 を 0 に設定する。

(2)Y = 2（Test Pattern : ON）の時
①ディスクの有無に関わらず、Video Encoder の Test Pattern を出力する。
SD Mode Register 3(Address 0x44) の bit6 を 1 に設定する。
②出力設定は Component/Interlace/480i 出力とする。

(3)Y = 3（Reserved）：Y = 1 と同じとする。

⑧モニタ端子設定する場合

| FL 管の表示 (13 桁の表示部 ) | | | | | | | | | | | | |
|---|---|---|---|---|---|---|---|---|---|---|---|---|
| 1 | 2 | 3 | 4 | 5 | 6 | 7 | 8 | 9 | 10 | 11 | 12 | 13 |
| T | D | Y | ＊ | Z | Z | ＊ | — | — | — | — | — | — |

Ｙ：1:ＲＦ 信号モニタ設定 (ANAMONI1,2)
2:Digital 信号モニタ設定 (MONI0,1),
3:Digital 信号モニタ設定 (MONI2,3),
4:Digital 信号モニタ設定 (MONI4,5),
5:Digital 信号モニタ設定 (MONI6,7),
6: バッファ残容量の出力設定 (DRV2)

ＺＺ：Y=1 の時 01 〜 06,09,0A
Y=2 の時 06 〜 08,0A,0B,0C
Y=3 の時 06 〜 08,0A,0B,0C
Y=4 の時 07 〜 0F
Y=5 の時 07 〜 0F

4 桁目：Y 選択中の場合、4 桁目に " ＊ " を表示する。
7 桁目：ZZ 選択中の場合、7 桁目に " ＊ " を表示する。
Y と ZZ の両方確定時は、4 桁目と 7 桁目に " ＊ " を表示する。

モード内の Y を SKIP REV, SKIP FWD ボタンで選択した後、PLAY ボタンを 1 回押すことで、モード内の ZZ を SKIP REV, SKIP FWD ボタンで選択する。

(Y=1 で確定した場合、SKIP FWD ボタンで 01,02,03,04,05,06,09,0A,0C,01…の順で切換わり PLAY ボタンを 1 回押すことで確定する。確定後 SKIP REV,SKIP FWD ボタンを押すとモード内の Y に切換わる。Y=1 を選択した場合、前回設定した ＺＺ 値が表示される。)

STOP ボタン押し、及び STOP ボタンと SKIP FWD ボタンの同時押しした場合でも、設定値はクリアされない。

バッファ残容量の出力は、DRV2 端子にデータの残容量を PWM 出力する。
( 注：バッファ残容量は、データの残容量。空きサイズではないので注意。また、DRV2 端子は、TRAY 駆動用にも使用している為、バッファ残容量を出力する場合は、TRAY が駆動しないよう注意すること。)

Y=2 または 3 の時に ZZ=0C が選択された場合は、MONI1 端子に Dfesv(FE 保存値 )、MONI2 端子に Dtesv(TE 保存値 )、MONI3 端子に Dassv(AS 保存値 ) を出力する。

### (5) Execution of trace mode (error rate display) (See "Table 3 - Trace mode details")

Trace will be performed if the PLAY button is pushed after choosing operation.

| FL Display (The display part of 13 digits) | | | | | | | | | | | | |
|---|---|---|---|---|---|---|---|---|---|---|---|---|
| 1 | 2 | 3 | 4 | 5 | 6 | 7 | 8 | 9 | 10 | 11 | 12 | 13 |
| T | Y | Y | m | m | m | m | m | m | l | l | l | l |

(YY : selection mode [71 to 94], m : address [PBA][HEX], l : error rate [COUNT/SEC] [HEX])
Note: Renewal of data is carried out for every CD:450(x6),188(x2.5) frame and DVD:85ECC block.

The mode chosen when selection mode was changed into the trace execution and the PLAY button was pushed is performed from the beginning.
When the PLAY button is pushed without changing selection mode, the mode under selection is performed from the beginning.
(If the PLAY button is pushed, the address corresponding to the chosen mode will be searched again.)

The pause mode is set after tracing is completed.

### (6) Other operations

① If the STOP button is pressed in any mode other than the tray open/close mode, the set returns to the status it was in when the test mode was entered.

| FL Display (The display part of 13 digits) | | | | | | | | | | | | |
|---|---|---|---|---|---|---|---|---|---|---|---|---|
| 1 | 2 | 3 | 4 | 5 | 6 | 7 | 8 | 9 | 10 | 11 | 12 | 13 |
| T | | | | | | | | | | | | |

If the STOP button is pressed while in the tray open/close mode, operation stops with the number of times the tray has opened and closed displayed. Press the STOP button once more to return to the status set when the test mode was entered.

② Push the OPEN/CLOSE button twice and carry out servo readjustment in OPEN operation → CLOSE operation.
(It readjusts with test mode.)

OPEN display
↓
CLOSE display
↓
LOADING display
↓

| FL Display (The display part of 13 digits) | | | | | | | | | | | | |
|---|---|---|---|---|---|---|---|---|---|---|---|---|
| 1 | 2 | 3 | 4 | 5 | 6 | 7 | 8 | 9 | 10 | 11 | 12 | 13 |
| T | | | | | | | | | | | | |

③ By pressing STOP button and SKIP FWD button simultaneously in the test mode, it returns to heat run mode.

### (5) トレースモード ( エラーレート表示 ) の実行（表 3 トレースモード詳細 参照）

動作を選択した後、PLAY ボタンを押すとトレースを実行する。

| FL 管の表示 (13 桁の表示部 ) | | | | | | | | | | | | |
|---|---|---|---|---|---|---|---|---|---|---|---|---|
| 1 | 2 | 3 | 4 | 5 | 6 | 7 | 8 | 9 | 10 | 11 | 12 | 13 |
| T | Y | Y | m | m | m | m | m | m | l | l | l | l |

( Y Y: 選択モード [71 ～ 94]、m: アドレス [PBA][HEX]、 l : エラーレート [COUNT/SEC][HEX])
( 注 ) CD:450( × 6)、188( × 2.5) フレーム , DVD:85ECC ブロック毎にデータ更新する。

トレース実行中に選択モードを変更し、PLAY ボタンを押すと選択したモードを最初から実行する。
選択モードを変更せずに PLAY ボタンを押した場合も、選択中のモードを最初から実行する。
(PLAY ボタンを押したら、選択しているモードに対応したアドレスを再度サーチする。)

トレース終了時は、PAUSE 状態になります。

### (6) その他の動作

①トレイ OPEN/CLOSE モード以外のモード中に STOP ボタンを押すとテストモード投入時の状態に戻る。

| FL 管の表示 (13 桁の表示部 ) | | | | | | | | | | | | |
|---|---|---|---|---|---|---|---|---|---|---|---|---|
| 1 | 2 | 3 | 4 | 5 | 6 | 7 | 8 | 9 | 10 | 11 | 12 | 13 |
| T | | | | | | | | | | | | |

トレイ OPEN/CLOSE モード時に STOP ボタンを押すと、オープンクローズ回数表示した状態で動作が停止し、もう一度 STOP ボタンを押すことで、テストモード投入時の状態に戻る。

② OPEN/CLOSE ボタンを 2 回押して、OPEN 動作→ CLOSE 動作で、サーボ再調整する。
( テストモードのまま再調整する。)

OPEN 表示
↓
CLOSE 表示
↓
LOADING 表示
↓

| FL 管の表示 (13 桁の表示部 ) | | | | | | | | | | | | |
|---|---|---|---|---|---|---|---|---|---|---|---|---|
| 1 | 2 | 3 | 4 | 5 | 6 | 7 | 8 | 9 | 10 | 11 | 12 | 13 |
| T | | | | | | | | | | | | |

③テストモード中に STOP ボタンと SKIP FWD ボタンの同時押し ( 投入時と同じボタン ) で、ヒートランモードに戻る。

## (7) Test mode detailed table

Table 1: Servo adjustment value display mode details

| TXX | Name | Meaning | Remarks |
|---|---|---|---|
| T0 | gavine0 | L0 layer VIN5VIN6VIN7VIN8 Fep section Gain middle stage, latter stage amplifier setting | VIN5 = "C" signal Fep section middle stage and latter stage amplifier setting. |
| T1 | gavin0 | L0 layer VIN9VIN10 Fep section Gain middle stage, latter stage amplifier setting | VIN9 = "E" signal and VIN10="F" signal Fep section middle stage and latter stage amplifier setting. |
| T33A | offving0 | L0 layer VIN7 Fep section latter stage offset setting | VIN7 = "A" signal Fep section latter stage offset setting. |
| T33B | offvinf0 | L0 layer VIN6 Fep section latter stage offset setting | VIN6 = "B" signal Fep section latter stage offset setting. |
| T33C | offvine0 | L0 layer VIN5 Fep section latter stage offset setting | VIN5 = "C" signal Fep section latter stage offset setting. |
| T33D | offvinh0 | L0 layer VIN8 Fep section latter stage offset setting | VIN8 = "D" signal Fep section latter stage offset setting. |
| T33E | offvina0 | L0 layer VIN9 Fep section latter stage offset setting | VIN9 = "E" signal Fep section latter stage offset setting. |
| T33F | offvinb0 | L0 layer VIN10 Fep section latter stage offset setting | VIN10 = "F" signal Fep section latter stage offset setting. |
| T34 | fepadr50 | L0 layer high sped servo (DPD) input Fep section Gain initial stage/middle stage/ latter stage amplifier setting | VIN1RfF, VIN2RF, VIN3RF and VIN4RF sigmals Fep section amplifier setting.<br>( * Used for DVD and SACD layer)<br>Initial stage amplifier: fixed setting value, not adjusted.<br>(Fixed at FEPadr5 [bit10, bit9]) |
| T35 | fbal0 | L0 layer focus balance adjustment value | 8.8 format (upper 8 bits: integer, lower 8 bits: decimal)<br>FBAL = Adjustment value / 256<br>FBAL range: 0xFF00 < FBAL < 0x0100<br><br>Set value 0xFF00 0xFF80 0x0000 0x0080 0x0100<br>1+FBAL 0 0.5 1.0 1.5 2<br>1-FBAL 2 1.5 1.0 0.5 0<br><br>For the focus signal :<br>FE = { (VIN5+VIN7) * (1+FBAL) } - { (VIN6+VIN8) * (1-FBAL) } |
| T36 | feagc0 | L0 layer FE signal AGC value | (1x for 0x100, 2x for 0x200. Y/0x100 ratio calculation.)<br>Adjusted so that FE amplitude reaches target of 2.45V. |
| T37 | fcga0 | L0 layer focus Loop Gain adjustment value | 1x for 0x100 [0x200 (2x) set to Typ.<br>(1x for 0x100, 2x for 0x200. Y/0x100 ratio calculation.)<br>Adjustment value 0x200 sets so that gain crossover reaches target. |
| T38 | asagc0 | L0 layer AS signal AGC value | (1x for 0x100, 2x for 0x200. Y/0x100 ratio calculation.)<br>Adjusted so that AS amplitude reaches target of 2.45V. |
| T39 | tbal0 | CD tracking balance adjustment value | 8.8 format (upper 8 bits: integer, lower 8 bits: decimal)<br>TBAL = Adjustment value / 256<br>TBAL range: 0xFF00 < TBAL < 0x0100<br><br>Set value 0xFF00 0xFF80 0x0000 0x0080 0x0100<br>1+TBAL 0 0.5 1.0 1.5 2<br>1-TBAL 2 1.5 1.0 0.5 0<br><br>For the tracking signal :<br>TE = { VIN9 * (1+TBAL) } - { VIN10 * (1-TBAL) } |
| T40 | oftpd0 | L0 layer DVD tracking balance adjustment value | "A" and "C" signals: same phase<br>"B" and "D" signals: same phase<br>With the above conditions:<br>If the phase of B is 90° ahead of the phase of A: 0x20 (+32 LSB)<br>If the phase of B is 90° behind of the phase of A: 0xE0 (-32 LSB)<br><br>* ± 16 LSB for a phase difference of 45°, 0 LSB for a phase difference of 0°. |
| T41 | oftlvll0 | L0 layer OFTR detection threshold value | For the CD : Signed 7bit ( 0x40 ～ 0x3F )<br>0x40 : 0V<br>0x00 : 1.65V<br>0x3F : 3.3V<br>( 3.3V/128 = 25.78[mV]/LSB )<br><br>For the DVD : Unsigned 7bit ( 0x00 ～ 0x7F )<br>0x00 : 0V<br>0x40 : 1.65V<br>0x7F : 3.3V<br>( 3.3V/128 = 25.78[mV]/LSB )<br><br>At tracking off, adjusted so that OFTR signal reaches target of Duty 50%. |
| T42 | teagc0 | L0 layer TE signal AGC value | (1x for 0x100, 2x for 0x200. Y/0x100 ratio calculation.)<br>Adjusted so that TE amplitude reaches target of 2.45V. |

## (7) テストモード詳細一覧表

表 1 サーボ調整値表示モード詳細

| TXX | 名称 | 意 味 | 備 考 |
|---|---|---|---|
| T0 | gavine0 | L0 層 VIN5VIN6VIN7VIN8 の Fep 部 Gain 中段、後段 Amp 設定 | VIN5 = "C" 信号の Fep 部の中段と後段の Amp 設定 |
| T1 | gavin0 | L0 層 VIN9VIN10 の Fep 部 Gain 中段、後段 Amp 設定 | VIN9 = "E" 信号 VIN10 = "F" 信号の Fep 部の中段と後段の Amp 設定 |
| T33A | offving0 | L0 層 VIN7 の Fep 部 後段 Offset 設定 | VIN7 = "A" 信号の Fep 部 後段の Offset 設定 |
| T33B | offvinf0 | L0 層 VIN6 の Fep 部 後段 Offset 設定 | VIN6 = "B" 信号の Fep 部 後段の Offset 設定 |
| T33C | offvine0 | L0 層 VIN5 の Fep 部 後段 Offset 設定 | VIN5 = "C" 信号の Fep 部 後段の Offset 設定 |
| T33D | offvinh0 | L0 層 VIN8 の Fep 部 後段 Offset 設定 | VIN8 = "D" 信号の Fep 部 後段の Offset 設定 |
| T33E | offvina0 | L0 層 VIN9 の Fep 部 後段 Offset 設定 | VIN9 = "E" 信号の Fep 部 後段の Offset 設定 |
| T33F | offvinb0 | L0 層 VIN10 の Fep 部 後段 Offset 設定 | VIN10 = "F" 信号の Fep 部 後段の Offset 設定 |
| T34 | fepadr50 | L0 層 高速 Servo(DPD) 入力の Fep 部 Gain 初段 / 中段 / 後段 Amp 設定 | VIN1RF, VIN2RF, VIN3RF, VIN4RF 信号の Fep 部 Amp 設定<br>（※ DVD、SACD 層の場合使用）<br>初段 Amp は固定の設定値のため調整されない。<br>(FEPadr5 [bit10, bit9] 固定 ) |
| T35 | fbal0 | L0 層フォーカスバランス調整値 | 8.8Format( 上位 8bit : 整数、下位 8bit 小数 ) で、<br>FBAL= 調整値 /256<br>FBAL の範囲は 0xFF00< FBAL<0x0100。<br><br>設定値 0xFF00 0xFF80 0x0000 0x0080 0x0100<br>1+FBAL 0 0.5 1.0 1.5 2<br>1-FBAL 2 1.5 1.0 0.5 0<br><br>フォーカス信号の場合 :<br>FE = { (VIN5+VIN7) * (1+FBAL) } - { (VIN6+VIN8) * (1-FBAL) } |
| T36 | feagc0 | L0 層 FE 信号の AGC 値 | （0x100 で 1 倍、0x200 で 2 倍。Y/0x100 の比率計算）<br>FE の振幅が目標ターゲット 2.45V になる様に調整される。 |
| T37 | fcga0 | L0 層フォーカス Loop Gain 調整値 | 0x100 で 1 倍 [0x200(2 倍 ) を Typ に設定する。]<br>（0x100 で 1 倍、0x200 で 2 倍。Y/0x100 の比率計算）<br>調整値 0x200 で Gain 交点が目標ターゲットになる様に設定している。 |
| T38 | asagc0 | L0 層 AS 信号の AGC 値 | （0x100 で 1 倍、0x200 で 2 倍。Y/0x100 の比率計算）<br>AS の振幅が目標ターゲット 2.45V になる様に調整される。 |
| T39 | tbal0 | CD トラッキングバランス調整値 | 8.8Format( 上位 8bit : 整数、下位 8bit 小数 ) で、<br>TBAL = 調整値 /256<br>TBAL の範囲は 0xFF00< TBAL <0x0100。<br><br>設定値 0xFF00 0xFF80 0x0000 0x0080 0x0100<br>1+TBAL 0 0.5 1.0 1.5 2<br>1-TBAL 2 1.5 1.0 0.5 0<br><br>CD トラッキング信号の場合 :<br>TE = { VIN9 * (1+TBAL) } - { VIN10 * (1-TBAL) } |
| T40 | oftpd0 | L0 層 DVD トラッキングバランス調整値 | "A" と "C" 信号が同位相<br>"B" と "D" 信号が同位相<br>上記の条件の場合、<br>B が A より位相が 90° 進んでいる時 : 0x20 (+32LSB)<br>B が A より位相が 90° 遅れている時 : 0xE0 (-32LSB)<br><br>※ 位相差 45° の場合 は± 16LSB、位相差 0° の場合は 0LSB。 |
| T41 | oftlvll0 | L0 層 OFTR 検出閾値 | CD の場合： 符号付き 7bit ( 0x40 ～ 0x3F )<br>0x40 : 0V<br>0x00 : 1.65V<br>0x3F : 3.3V<br>( 3.3V/128 = 25.78[mV]/LSB )<br><br>DVD の場合： 符号無し 7bit ( 0x00 ～ 0x7F )<br>0x00 : 0V<br>0x40 : 1.65V<br>0x7F : 3.3V<br>( 3.3V/128 = 25.78[mV]/LSB )<br><br>トラッキング Off 状態での OFTR 信号が Duty50% になる様調整される。 |
| T42 | teagc0 | L0 層 TE 信号の AGC 値 | （0x100 で 1 倍、0x200 で 2 倍。Y/0x100 の比率計算）<br>TE の振幅が目標ターゲット 2.45V になる様に調整される。 |

| TXX | Name | Meaning | Remarks |
|---|---|---|---|
| T43 | tkga0 | L0 layer tracking Loop Gain adjustment value | 1x for 0x100 [0x200 (2x) set to Typ.<br>(1x for 0x100, 2x for 0x200. Y/0x100 ratio calculation.)<br>Adjustment value 0x200 sets so that gain crossover reaches target. |
| T44 | bst0 | L0 layer RF signal Boost adjustment value | Adjustment range : 0x0000 ～ 0x001C<br>0x0000 : 0dB<br>0x001C : 14dB<br>(0.5dB/LSB) |
| T45 | felvl0 | Threshold value at which focus servo turns on (FE signal) | 16-bit signed calculation<br>upper (8 bits) / lower (8 bits) : 8-bit signed calculation<br>0x7F** (0x**7F) : 3.3V<br>0x00** (0x**00) : 1.65V<br>0x80** (0x**80) : 0V<br>3.3V/256 = 12.89[mV]/LSB |
| T46 | aslvl0 | Threshold value at which focus servo turns on (AS signal) | 16-bit signed calculation<br>upper (8 bits) / lower (8 bits) : 8-bit signed calculation<br>0x7F** (0x**7F) : 3.3V<br>0x00** (0x**00) : 1.65V<br>0x80** (0x**80) : 0V<br>3.3V/256 = 12.89[mV]/LSB |
| T47 | aslvl20 | Focus servo draw in check value<br>(AS signal) | 16-bit signed calculation<br>upper (8 bits) / lower (8 bits) : 8-bit signed calculation<br>0x7F** (0x**7F) : 3.3V<br>0x00** (0x**00) : 1.65V<br>0x80** (0x**80) : 0V<br>3.3V/256 = 12.89[mV]/LSB |
| T48 | fcnglvl0 | Focus servo off detection threshold value (AS signal) | 16-bit signed calculation<br>upper (8 bits) / lower (8 bits) : 8-bit signed calculation<br>0x7F** (0x**7F) : 3.3V<br>0x00** (0x**00) : 1.65V<br>0x80** (0x**80) : 0V<br>3.3V/256 = 12.89[mV]/LSB |
| T49 | gavin1 | L1 layer VIN9VIN10 Fep section Gain middle stage, latter stage amplifier setting | VIN9 = "E" signal Fep section middle stage and latter stage amplifier setting. |
| | | | |
| T50 | gavine1 | L1 layer VIN5VIN6VIN7VIN8 Fep section Gain middle stage, latter stage amplifier setting | VIN5 = "C" signal Fep section middle stage and latter stage amplifier setting. |
| T51A | offving1 | L1 layer VIN7 Fep section latter stage offset setting | VIN7 = "A" signal Fep section latter stage offset setting. |
| T51B | offvinf1 | L1 layer VIN6 Fep section latter stage offset setting | VIN6 = "B" signal Fep section latter stage offset setting. |
| T51C | offvine1 | L1 layer VIN5 Fep section latter stage offset setting | VIN5 = "C" signal Fep section latter stage offset setting. |
| T51D | offvinh1 | L1 layer VIN8 Fep section latter stage offset setting | VIN8 = "D" signal Fep section latter stage offset setting. |
| T51E | offvina1 | L1 layer VIN9 Fep section latter stage offset setting | VIN9 = "E" signal Fep section latter stage offset setting. |
| T51F | offvinb1 | L1 layer VIN10 Fep section latter stage offset setting | VIN10 = "F" signal Fep section latter stage offset setting. |
| T52 | fepadr51 | L1 layer high sped servo (DPD) input Fep section Gain initial stage/middle stage/ latter stage amplifier setting | VIN1RfF, VIN2RF, VIN3RF and VIN4RF sigmals Fep section amplifier setting.<br>( * Used for DVD and SACD layer)<br>Initial stage amplifier: fixed setting value, not adjusted.<br>(Fixed at FEPadr5 [bit10, bit9]) |
| T53 | fbal1 | L1 layer focus balance adjustment value | 8.8 format (upper 8 bits: integer, lower 8 bits: decimal)<br>FBAL = Adjustment value / 256<br>FBAL range: 0xFF00 < FBAL < 0x0100<br><br>Set value 0xFF00 0xFF80 0x0000 0x0080 0x0100<br>1+FBAL 0 0.5 1.0 1.5 2<br>1-FBAL 2 1.5 1.0 0.5 0<br><br>For the focus signal :<br>FE = { (VIN5+VIN7) * (1+FBAL) } - { (VIN6+VIN8) * (1-FBAL) } |
| T54 | feagc1 | L1 layer FE signal AGC value | (1x for 0x100, 2x for 0x200. Y/0x100 ratio calculation.)<br>Adjusted so that FE amplitude reaches target of 2.45V. |
| T55 | fcga1 | L1 layer focus Loop Gain adjustment value | 1x for 0x100 [0x200 (2x) set to Typ.<br>(1x for 0x100, 2x for 0x200. Y/0x100 ratio calculation.)<br>Adjustment value 0x200 sets so that gain crossover reaches target. |
| T56 | asagc1 | L1 layer AS signal AGC value | (1x for 0x100, 2x for 0x200. Y/0x100 ratio calculation.)<br>Adjusted so that AS amplitude reaches target of 2.45V. |

| TXX | 名称 | 意 味 | 備 考 |
|---|---|---|---|
| T43 | tkga0 | L0 層トラッキング Loop Gain 調整値 | 0x100 で 1 倍 [0x200(2 倍 ) を Typ に設定する。]<br>（0x100 で 1 倍、0x200 で 2 倍。Y/0x100 の比率計算）<br>調整値 0x200 で Gain 交点が目標ターゲットになる様に設定している。 |
| T44 | bst0 | L0 層 RF 信号の Boost 調整値 | 調整範囲 : 0x0000 ～ 0x001C<br>0x0000 : 0dB<br>0x001C : 14dB<br>(0.5dB/LSB) |
| T45 | felvl0 | フォーカスサーボを On する閾値 (FE 信号 ) | 16bit 符号付計算<br>上位 (8bit) / 下位 (8bit)  符号付き 8bit 計算<br>0x7F** (0x**7F) : 3.3V<br>0x00** (0x**00) : 1.65V<br>0x80** (0x**80) : 0V<br>3.3V/256 = 12.89[mV]/LSB |
| T46 | aslvl0 | フォーカスサーボを On する閾値 (AS 信号 ) | 16bit 符号付計算<br>上位 (8bit) / 下位 (8bit)  符号付き 8bit 計算<br>0x7F** (0x**7F) : 3.3V<br>0x00** (0x**00) : 1.65V<br>0x80** (0x**80) : 0V<br>3.3V/256 = 12.89[mV]/LSB |
| T47 | aslvl20 | フォーカスサーボ引き込み確認の値 (AS 信号 ) | 16bit 符号付計算<br>上位 (8bit) / 下位 (8bit)  符号付き 8bit 計算<br>0x7F** (0x**7F) : 3.3V<br>0x00** (0x**00) : 1.65V<br>0x80** (0x**80) : 0V<br>3.3V/256 = 12.89[mV]/LSB |
| T48 | fcnglvl0 | フォーカスサーボ外れ検出の閾値 (AS 信号 ) | 16bit 符号付計算<br>上位 (8bit) / 下位 (8bit)  符号付き 8bit 計算<br>0x7F** (0x**7F) : 3.3V<br>0x00** (0x**00) : 1.65V<br>0x80** (0x**80) : 0V<br>3.3V/256 = 12.89[mV]/LSB |
| T49 | gavin1 | L1 層 VIN9VIN10 の Fep 部 Gain 中段、後段 Amp 設定 | VIN9 = "E" 信号の Fep 部の中段と後段の Amp 設定 |
| | | | |
| T50 | gavine1 | L1 層 VIN5VIN6VIN7VIN8 の Fep 部 Gain 中段、後段 Amp 設定 | VIN5 = "C" 信号の Fep 部の中段と後段の Amp 設定 |
| T51A | offving1 | L1 層 VIN7 の Fep 部 後段 Offset 設定 | VIN7 = "A" 信号の Fep 部 後段の Offset 設定 |
| T51B | offvinf1 | L1 層 VIN6 の Fep 部 後段 Offset 設定 | VIN6 = "B" 信号の Fep 部 後段の Offset 設定 |
| T51C | offvine1 | L1 層 VIN5 の Fep 部 後段 Offset 設定 | VIN5 = "C" 信号の Fep 部 後段の Offset 設定 |
| T51D | offvinh1 | L1 層 VIN8 の Fep 部 後段 Offset 設定 | VIN8 = "D" 信号の Fep 部 後段の Offset 設定 |
| T51E | offvina1 | L1 層 VIN9 の Fep 部 後段 Offset 設定 | VIN9 = "E" 信号の Fep 部 後段の Offset 設定 |
| T51F | offvinb1 | L1 層 VIN10 の Fep 部 後段 Offset 設定 | VIN10 = "F" 信号の Fep 部 後段の Offset 設定 |
| T52 | fepadr51 | L1 層 高速 Servo(DPD) 入力の Fep 部 Gain 初段 / 中段 / 後段  Amp 設定 | VIN1RF, VIN2RF, VIN3RF, VIN4RF 信号の Fep 部 Amp 設定<br>（※ DVD、SACD 層の場合使用）<br>初段 Amp は固定の設定値のため調整されない。<br>(FEPadr5 [bit10, bit9] 固定 ) |
| T53 | fbal1 | L1 層フォーカスバランス調整値 | 8.8Format( 上位 8bit : 整数、下位 8bit 小数 ) で、<br>FBAL = 調整値 /256<br>FBAL の範囲は 0xFF00< FBAL <0x0100。<br><br>設定値 0xFF00 0xFF80 0x0000 0x0080 0x0100<br>1+FBAL 0 0.5 1.0 1.5 2<br>1-FBAL 2 1.5 1.0 0.5 0<br><br>フォーカス信号の場合 :<br>FE = { (VIN5+VIN7) * (1+FBAL) } - { (VIN6+VIN8) * (1-FBAL) } |
| T54 | feagc1 | L1 層 FE 信号の AGC 値 | （0x100 で 1 倍、0x200 で 2 倍。Y/0x100 の比率計算）<br>FE の振幅が目標ターゲット 2.45V になる様調整される。 |
| T55 | fcga1 | L 1 層フォーカス Loop Gain 調整値 | 0x100 で 1 倍 [0x200(2 倍 ) を Typ に設定する ]<br>（0x100 で 1 倍、0x200 で 2 倍。Y/0x100 の比率計算）<br>調整値 0x200 で Gain 交点が目標ターゲットになる様設定している。 |
| T56 | asagc1 | L1 層 AS 信号の AGC 値 | （0x100 で 1 倍、0x200 で 2 倍。Y/0x100 の比率計算）<br>AS の振幅が目標ターゲット 2.45V になる様調整される。 |

| TXX | Name | Meaning | Remarks |
|---|---|---|---|
| T57 | oftpd1 | L1 layer DVD tracking balance adjustment value | "A" and "C" signals: same phase<br>"B" and "D" signals: same phase<br>With the above conditions:<br>If the phase of B is 90° ahead of the phase of A: 0x20 (+32 LSB)<br>If the phase of B is 90° behind of the phase of A: 0xE0 (-32 LSB)<br><br>* ± 16 LSB for a phase difference of 45°, 0 LSB for a phase difference of 0°. |
| T58 | oftlvll1 | L1 layer OFTR detection threshold value | For the DVD : Unsigned 7bit ( 0x00 ～ 0x7F )<br>0x00 : 0V<br>0x40 : 1.65V<br>0x7F : 3.3V<br>( 3.3V/128 = 25.78[mV]/LSB )<br>At tracking off, adjusted so that OFTR signal reaches target of Duty 50%. |
| T59 | teagc1 | L1 layer TE signal AGC value | (1x for 0x100, 2x for 0x200. Y/0x100 ratio calculation.)<br>Adjusted so that TE amplitude reaches target of 2.45V. |
| | | | |
| T60 | tkga1 | L1 layer tracking Loop Gain adjustment value | 1x for 0x100 [0x200 (2x) set to Typ.<br>(1x for 0x100, 2x for 0x200. Y/0x100 ratio calculation.)<br>Adjustment value 0x200 sets so that gain crossover reaches target. |
| T61 | bst1 | L1 layer RF signal Boost adjustment value | Adjustment range : 0x0000 ～ 0x001C<br>0x0000 : 0dB<br>0x001C : 14dB<br>(0.6dB/LSB) |
| T62 | felvl1 | SACD layer :<br>Threshold value at which focus servo turns on (FE signal) | 16-bit signed calculation<br>upper (8 bits) / lower (8 bits) : 8-bit signed calculation<br>0x7F** (0x**7F) : 3.3V<br>0x00** (0x**00) : 1.65V<br>0x80** (0x**80) : 0V<br>3.3V/256 = 12.89[mV]/LSB |
| T63 | aslvl1 | SACD layer :<br>Threshold value at which focus servo turns on (AS signal) | 16-bit signed calculation<br>upper (8 bits) / lower (8 bits) : 8-bit signed calculation<br>0x7F** (0x**7F) : 3.3V<br>0x00** (0x**00) : 1.65V<br>0x80** (0x**80) : 0V<br>3.3V/256 = 12.89[mV]/LSB |
| T64 | aslvl21 | SACD layer :<br>Focus servo draw in check value<br>(AS signal) | 16-bit signed calculation<br>upper (8 bits) / lower (8 bits) : 8-bit signed calculation<br>0x7F** (0x**7F) : 3.3V<br>0x00** (0x**00) : 1.65V<br>0x80** (0x**80) : 0V<br>3.3V/256 = 12.89[mV]/LSB |
| T65 | fcnglvl1 | SACD layer :<br>Focus servo off detection threshold value<br>(AS signal) | 16-bit signed calculation<br>upper (8 bits) / lower (8 bits) : 8-bit signed calculation<br>0x7F** (0x**7F) : 3.3V<br>0x00** (0x**00) : 1.65V<br>0x80** (0x**80) : 0V<br>3.3V/256 = 12.89[mV]/LSB |
| T66 | DiscType | Disc Type | See "Table-2 Disc type information" on page 25. |
| T67 | Format | Disc Format type | See "Table-2 Disc type information" on page 25. |

Table 2 : Disc type information

| Disc Type | Contents of fluorescent tube display in servo adjustment value display mode (T66) | Format Type | Contents of fluorescent tube display in servo adjustment value display mode (T67) |
|---|---|---|---|
| NO-DISC | NO-DISC | Unknown | NONE |
| DVD1 layer, +R, +RW | DVD1 | CD-ROM, Divx | CD-ROM |
| DVD2 layer, -DL, +DL | DVD2 | CD-DA | CD-DA |
| DVD-R | DVD-R | VideoCD | VIDEO CD |
| DVD-RW | DVD-RW | DVD-ROM, Divx | DVD-ROM |
| CD, CD-R, CD-RW | CD | DVD-VIDEO | DVD-VIDEO |
| SACD(Single Layer) | SACD SING | DVD-AUDIO | DVD-AUDIO |
| SACD(Dual Layer) | SACD DUAL | CD-dts | CD-dts |
| SACD(Hybrid) | SACD HYBR | DVD-VR | DVD-VR |
| Unknown | NONE | Mixed mode CD-ROM | CD-ROM-DA |
| | | SACD | SACD |

(When there are multiple formats, the format played and identified with priority is displayed.)

| TXX | 名称 | 意 味 | 備 考 |
|---|---|---|---|
| T57 | oftpd1 | L1 層 DVD トラッキングバランス調整値 | "A" と "C" 信号が同位相<br>"B" と "D" 信号が同位相<br>上記の条件の場合、<br>B が A より位相が 90° 進んでいる時 : 0x20 (+32LSB)<br>B が A より位相が 90° 遅れている時 : 0xE0 (-32LSB)<br>※ 位相差 45° の場合は± 16LSB、位相差 0° の場合は 1LSB。 |
| T58 | oftlvll1 | L 1 層 OFTR 検出閾値 | DVD 符号無し 7bit ( 0x00 ～ 0x7F )<br>0x00 : 0V<br>0x40 : 1.65V<br>0x7F : 3.3V<br>( 3.3V/128 = 25.78[mV]/LSB )<br>トラッキング Off 状態での OFTR 信号が Duty50% になる様調整される。 |
| T59 | teagc1 | L1 層 TE 信号の AGC 値 | （0x100 で 1 倍、0x200 で 2 倍。Y/0x100 の比率計算）<br>TE の振幅が目標ターゲット 2.45V になる様調整される。 |
| | | | |
| T60 | tkga1 | L1 層トラッキング Loop Gain 調整値 | 0x100 で 1 倍 [0x200(2 倍 ) を Typ に設定する ]<br>（0x100 で 1 倍、0x200 で 2 倍。Y/0x100 の比率計算）<br>調整値 0x200 で Gain 交点が目標ターゲットになる様設定している。 |
| T61 | bst1 | L1 層 RF 信号の Boost 調整値 | 調整範囲 : 0x0000 ～ 0x001C<br>0x0000 : 0dB<br>0x001C : 14dB<br>(0.6dB/LSB) |
| T62 | felvl1 | SACD 層にフォーカスサーボを On する閾値 (FE 信号 ) | 16bit 符号付計算<br>上位 (8bit) / 下位 (8bit) 符号付き 8bit 計算<br>0x7F** (0x**7F) : 3.3V<br>0x00** (0x**00) : 1.65V<br>0x80** (0x**80) : 0V<br>3.3V/256 = 12.89[mV]/LSB |
| T63 | aslvl1 | SACD 層にフォーカスサーボを On する閾値 (AS 信号 ) | 16bit 符号付計算<br>上位 (8bit) / 下位 (8bit) 符号付き 8bit 計算<br>0x7F** (0x**7F) : 3.3V<br>0x00** (0x**00) : 1.65V<br>0x80** (0x**80) : 0V<br>3.3V/256 = 12.89[mV]/LSB |
| T64 | aslvl21 | SACD 層のフォーカスサーボ引き込み確認値 (AS 信号 ) | 16bit 符号付計算<br>上位 (8bit) / 下位 (8bit) 符号付き 8bit 計算<br>0x7F** (0x**7F) : 3.3V<br>0x00** (0x**00) : 1.65V<br>0x80** (0x**80) : 0V<br>3.3V/256 = 12.89[mV]/LSB |
| T65 | fcnglvl1 | SACD 層のフォーカスサーボ外れ検出の閾値 (AS 信号 ) | 16bit 符号付計算<br>上位 (8bit) / 下位 (8bit) 符号付き 8bit 計算<br>0x7F** (0x**7F) : 3.3V<br>0x00** (0x**00) : 1.65V<br>0x80** (0x**80) : 0V<br>3.3V/256 = 12.89[mV]/LSB |
| T66 | DiscType | ディスクのタイプ | 表 2 ディスク種別情報参照。 |
| T67 | Format | ディスクのフォーマットタイプ | 表 2 ディスク種別情報参照。 |

表 2 ディスク種別情報

| ディスクタイプ | サーボ調整値表示モードでの FL 管表示内容（T66） | フォーマットタイプ | サーボ調整値表示モードでの FL 管表示内容（T67） |
|---|---|---|---|
| ディスクなし | NO-DISC | 不明 | NONE |
| DVD1 層、+R、+RW | DVD1 | CD-ROM、Divx | CD-ROM |
| DVD2 層、-DL、+DL | DVD2 | CD-DA | CD-DA |
| DVD-R | DVD-R | VideoCD | VIDEO CD |
| DVD-RW | DVD-RW | DVD-ROM、Divx | DVD-ROM |
| CD、CD-R、CD-RW | CD | DVD-VIDEO | DVD-VIDEO |
| SACD(Single Layer) | SACD SING | DVD-AUDIO | DVD-AUDIO |
| SACD(Dual Layer) | SACD DUAL | CD-dts | CD-dts |
| SACD(Hybrid) | SACD HYBR | DVD-VR | DVD-VR |
| 不明 | NONE | Mixed mode CD-ROM | CD-ROM-DA |
| | | SACD | SACD |

( フォーマットが混在する場合、優先して再生、認識されるフォーマットを表示します。)

Table 3: Trace mode details

| YY | Contents | Contents supplement |
|---|---|---|
| 71 | A display of PO error detection number of the inner circumference of 1-layer and an address. | It is invalid at the time of CD operation. |
| 72 | A display of PO uncorrectable number of the inner circumference of 1-layer and an address. | It is invalid at the time of CD operation. |
| 73 | A display of PI error detection number of the inner circumference of 1-layer and an address. | CD : C1 error detection number (x2.5) |
| 74 | A display of PI uncorrectable number of the inner circumference of 1-layer and an address. | CD : C2 uncorrectable error number (x2.5) |
| 75 | A display of PO error detection number of the central circumference of 1-layer and an address. | It is invalid at the time of CD operation. |
| 76 | A display of PO uncorrectable number of the central circumference of 1-layer and an address. | It is invalid at the time of CD operation. |
| 77 | A display of PI error detection number of the central circumference of 1-layer and an address. | CD : C1 error detection number (x2.5) |
| 78 | A display of PI uncorrectable number of the central circumference of 1-layer and an address. | CD : C2 uncorrectable error number (x2.5) |
| 79 | A display of PO error detection number of the outer circumference of 1-layer and an address. | It is invalid at the time of CD operation. |
| 80 | A display of PO uncorrectable number of the outer circumference of 1-layer and an address. | It is invalid at the time of CD operation. |
| 81 | A display of PI error detection number of the outer circumference of 1-layer and an address. | CD : C1 error detection number (x2.5) |
| 82 | A display of PI uncorrectable number of the outer circumference of 1-layer and an address. | CD : C2 uncorrectable error number (x2.5) |
| | | |
| 83 | A display of PO error detection number of the inner circumference of 2-layer and an address. | In the case of 1-layer DVD and CD disc, it is invalid. |
| 84 | A display of PO uncorrectable number of the inner circumference of 2-layer and an address. | In the case of 1-layer DVD and CD disc, it is invalid. |
| 85 | A display of PI error detection number of the inner circumference of 2-layer and an address. | In the case of 1-layer DVD disc, it is invalid.<br>CD : C1 error detection number (x6) |
| 86 | A display of PI uncorrectable number of the inner circumference of 2-layer and an address. | In the case of 1-layer DVD disc, it is invalid.<br>CD : C2 uncorrectable error number (x6) |
| 87 | A display of PO error detection number of the central circumference of 2-layer and an address. | In the case of 1-layer DVD and CD disc, it is invalid. |
| 88 | A display of PO uncorrectable number of the central circumference of 2-layer and an address. | In the case of 1-layer DVD and CD disc, it is invalid. |
| 89 | A display of PI error detection number of the central circumference of 2-layer and an address. | In the case of 1-layer DVD disc, it is invalid.<br>CD : C1 error detection number (x6) |
| 90 | A display of PI uncorrectable number of the central circumference of 2-layer and an address. | In the case of 1-layer DVD disc, it is invalid.<br>CD : C2 uncorrectable error number (x6) |
| 91 | A display of PO error detection number of the outer circumference of 2-layer and an address. | In the case of 1-layer DVD and CD disc, it is invalid. |
| 92 | A display of PO uncorrectable number of the outer circumference of 2-layer and an address. | In the case of 1-layer DVD and CD disc, it is invalid. |
| 93 | A display of PI error detection number of the outer circumference of 2-layer and an address. | In the case of 1-layer DVD disc, it is invalid.<br>CD : C1 error detection number (x6) |
| 94 | A display of PI uncorrectable number of the outer circumference of 2-layer and an address. | In the case of 1-layer DVD disc, it is invalid.<br>CD : C2 uncorrectable error number (x6) |

表 3 トレースモード詳細

| Y Y | 内容 | 補足説明 |
|---|---|---|
| 71 | 1 層内周の PO 誤り検出数とアドレスの表示 | CD 時は無効。 |
| 72 | 1 層内周の PO 訂正不可数とアドレスの表示 | CD 時は無効。 |
| 73 | 1 層内周の PI 誤り検出数とアドレスの表示 | CD 時は C1 誤り検出数。(x2.5) |
| 74 | 1 層内周の PI 訂正不可数とアドレスの表示 | CD 時は C2 訂正不可数。(x2.5) |
| 75 | 1 層中周の PO 誤り検出数とアドレスの表示 | CD 時は無効。 |
| 76 | 1 層中周の PO 訂正不可数とアドレスの表示 | CD 時は無効。 |
| 77 | 1 層中周の PI 誤り検出数とアドレスの表示 | CD 時は C1 誤り検出数。(x2.5) |
| 78 | 1 層中周の PI 訂正不可数とアドレスの表示 | CD 時は C2 訂正不可数。(x2.5) |
| 79 | 1 層外周の PO 誤り検出数とアドレスの表示 | CD 時は無効。 |
| 80 | 1 層外周の PO 訂正不可数とアドレスの表示 | CD 時は無効。 |
| 81 | 1 層外周の PI 誤り検出数とアドレスの表示 | CD 時は C1 誤り検出数。(x2.5) |
| 82 | 1 層外周の PI 訂正不可数とアドレスの表示 | CD 時は C2 訂正不可数。(x2.5) |
| | | |
| 83 | 2 層内周の PO 誤り検出数とアドレスの表示 | DVD 1 層ディスクの場合、無効。<br>CD 時は無効。 |
| 84 | 2 層内周の PO 訂正不可数とアドレスの表示 | DVD 1 層ディスクの場合、無効。<br>CD 時は無効。 |
| 85 | 2 層内周の PI 誤り検出数とアドレスの表示 | DVD 1 層ディスクの場合、無効。<br>CD 時は C1 誤り検出数。(x6) |
| 86 | 2 層内周の PI 訂正不可数とアドレスの表示 | DVD 1 層ディスクの場合、無効。<br>CD 時は C2 訂正不可数。(x6) |
| 87 | 2 層中周の PO 誤り検出数とアドレスの表示 | DVD 1 層ディスクの場合、無効。<br>CD 時は無効。 |
| 88 | 2 層中周の PO 訂正不可数とアドレスの表示 | DVD 1 層ディスクの場合、無効。<br>CD 時は無効。 |
| 89 | 2 層中周の PI 誤り検出数とアドレスの表示 | DVD 1 層ディスクの場合、無効。<br>CD 時は C1 誤り検出数。(x6) |
| 90 | 2 層中周の PI 訂正不可数とアドレスの表示 | DVD 1 層ディスクの場合、無効。<br>CD 時は C2 訂正不可数。(x6) |
| 91 | 2 層外周の PO 誤り検出数とアドレスの表示 | DVD 1 層ディスクの場合、無効。<br>CD 時は無効。 |
| 92 | 2 層外周の PO 訂正不可数とアドレスの表示 | DVD 1 層ディスクの場合、無効。<br>CD 時は無効。 |
| 93 | 2 層外周の PI 誤り検出数とアドレスの表示 | DVD 1 層ディスクの場合、無効。<br>CD 時は C1 誤り検出数。(x6) |
| 94 | 2 層外周の PI 訂正不可数とアドレスの表示 | DVD 1 層ディスクの場合、無効。<br>CD 時は C2 訂正不可数。(x6) |

# TROUBLE SHOOTING

## 1. GU-3750-2 (DIGITAL POWER UNIT)

Check FUSE Condition
• FUSE (F901) OPEN?

**N.G.** (Open) → Check Primary Parts and Soldering.
• [D901~D904]
• [IC901]
• [C904]

**O.K.** ↓

Check +3.3V_NSW Output
• Voltage Check
3.3V DC (non-switched) Voltage is O.K.?
(CW132 4,5pin output)

**N.G.** → Check Parts and Soldering.
• [IC902] ALL pin (TA76432S)
• [IC906] ALL pin (PC123-Y)
• [D908] (FMJ-2303)
• [TR901] (2SA933A)
• [D906] (1SS133)
• [C907] (47/50)
• [C909] (47/50)
and Other Circuits

**O.K.** ↓

Check +3.3V Output
• Voltage Check
3.3V DC (switched) Voltage is O.K.?
(CW132 3pin output)

**N.G.** → Check Parts and Soldering.
• [TR910] (RSS100N03)
and Other Circuits

**O.K.** ↓

Check +12V Output
• Voltage Check
12V DC (switched) Voltage is O.K.?
(CW132 1pin output)

**N.G.** → Check Parts and Soldering.
• [TR902] (2SB1268)
• [D910] (FMB-G19L)
• [IC910] (KIA7812API)
and Other Circuits

**O.K.** ↓

Check -32V Output
• Voltage Check
-32V DC (switched) Voltage is O.K.?
(CX031 1pin output)

**N.G.** → Check Parts and Soldering.
• [R978] (2.2Ω)
• [R953] (2.2Ω)
• [TR904] (2SB1185)
• [ZD903] (MTZJ36B)
• [D914] (AG01Z)
and Other Circuits

**O.K.** ↓

Check +2.5V Output
• Voltage Check
2.5V DC (switched) Voltage is O.K.?
(CX064 2pin output)

**N.G.** → Check Parts and Soldering.
• [TR913] (2SC5370)
• [IC907] (TA76432S)
and Other Circuits

**O.K.** ↓

Check +1.5V Output
• Voltage Check
1.5V DC (switched) Voltage is O.K.?
(CX064 3,4pin output)

**N.G.** → Check Parts and Soldering.
• [TR914] (2SC5370)
• [IC908] (TA76432S)
and Other Circuits

**O.K.** ↓

Check +8V Output
• Voltage Check
+8V DC (switched) Voltage is O.K.?
(GU-3793, C803 +Terminal)

**N.G.** → Check Parts and Soldering.
• [IC801] (KIA7808API)
and Other Circuits

**O.K.** ↓

END

# トラブルシューティング

## 1. GU-3750-2 (DIGITAL POWER UNIT)

ヒューズは切れているか？
・FUSE (F901)

**N.G.** (切れている) → 一次側の回路部品の故障
・[D901 ～ D904]
・[IC901]
・[C904]

**O.K.** ↓

+3.3V NSW 出力電圧は正常か？
・(CW132 4,5pin 出力)

**N.G.** → 以下の部品の状態・半田付けチェック
・[IC902] 全てのピン (TA76432S)
・[IC906] 全てのピン (PC123-Y)
・[D908] (FMJ-2303)
・[TR901] (2SA933A)
・[D906] (1SS133)
・[C907] (47/50)
・[C909] (47/50)
その他この出力の負荷となる回路

**O.K.** ↓

+3.3V 出力電圧は正常か？
・(CW132 3pin 出力)

**N.G.** → 以下の部品の状態・半田付けチェック
・[TR910] (RSS100N03)
その他この出力の負荷となる回路

**O.K.** ↓

+12 V 出力電圧は正常か？
・( CW132 1pin 出力)

**N.G.** → 以下の部品の状態・半田付けチェック
・[TR902] (2SB1268)
・[D910] (FMB-G19L)
・[IC910] (KIA7812API)
その他この出力の負荷となる回路

**O.K.** ↓

-32 V 出力電圧は正常か？
・(CX031 1pin 出力)

**N.G.** → 以下の部品の状態・半田付けチェック
・[R978] (2.2Ω)
・[R953] (2.2Ω)
・[TR904] (2SB1185)
・[ZD903] (MTZJ36B)
・[D914] (AG01Z)
その他この出力の負荷となる回路

**O.K.** ↓

+2.5V 出力電圧は正常か？
・(CX064 2pin 出力)

**N.G.** → 以下の部品の状態・半田付けチェック
・[TR913] (2SC5370)
・[IC907] (TA76432S)
その他この出力の負荷となる回路

**O.K.** ↓

+1.5V 出力電圧は正常か？
・(CX064 3,4pin 出力)

**N.G.** → 以下の部品の状態・半田付けチェック
・[TR914] (2SC5370)
・[IC908] (TA76432S)
その他この出力の負荷となる回路

**O.K.** ↓

+8V 出力電圧は正常か？
・(GU-3793, C803 + 端子)

**N.G.** → 以下の部品の状態・半田付けチェック
・[IC801] (KIA7808API)
その他この出力の負荷となる回路

**O.K.** ↓

終了

## 2. GU-3749-1 (MAIN UNIT)

### 2.1. FL TUBE dosen't light

#### (1) Check the Set-up process of System

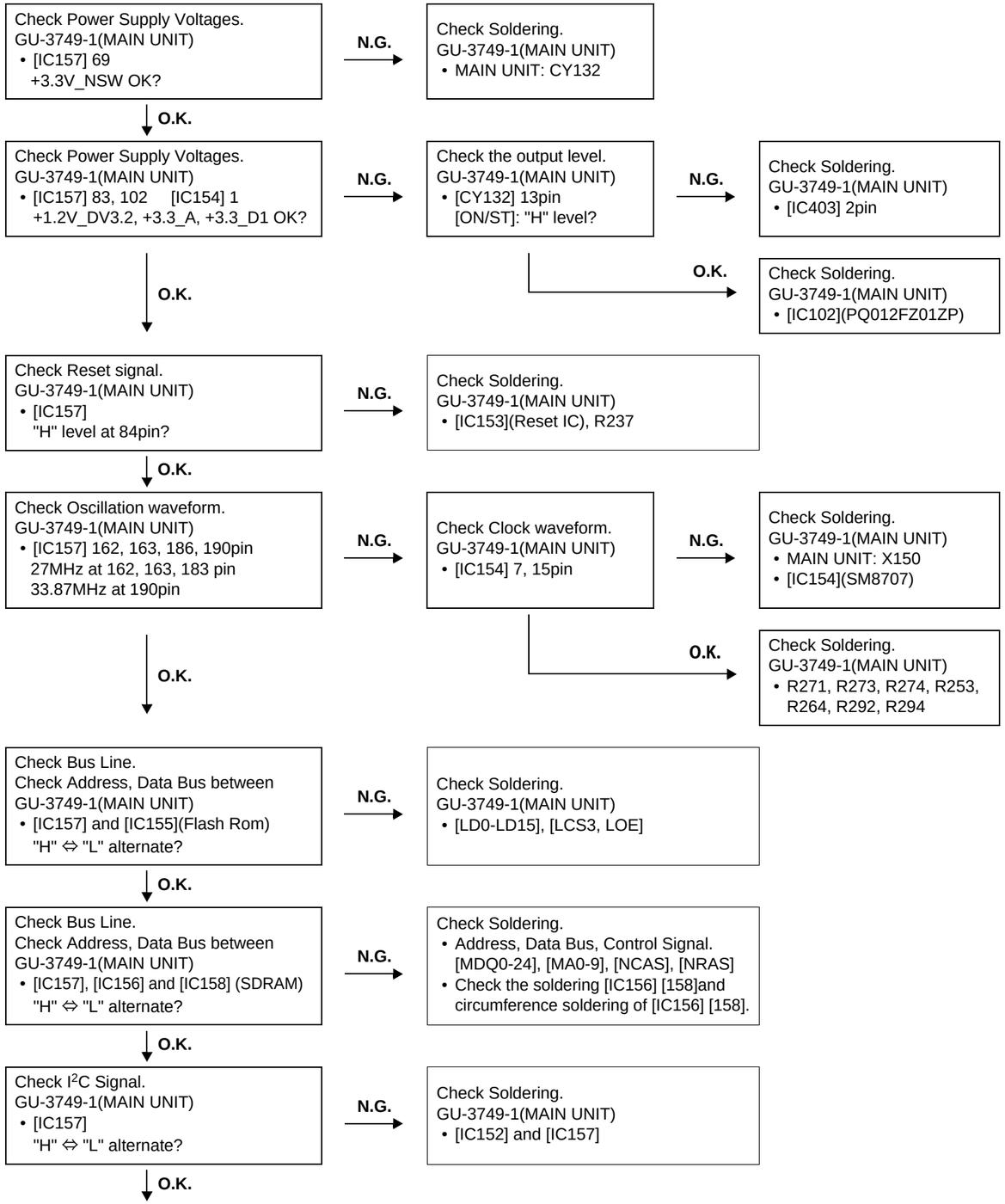


## 2. GU-3749-1 (MAIN UNIT)

### 2.1. FL 管点灯せず

#### (1) システム立ち上がりチェック工程

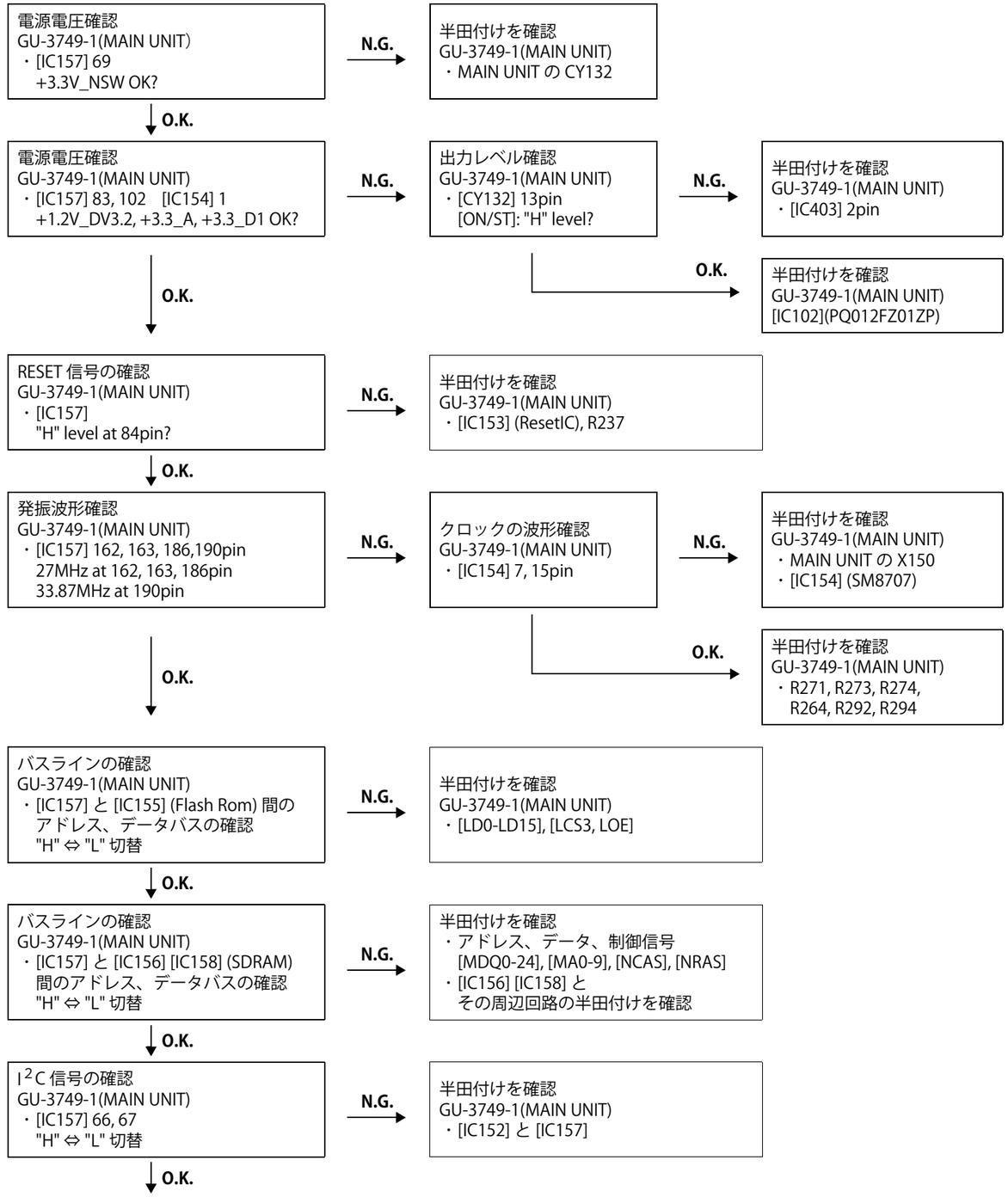

Check Data Bus
GU-3750-1(DISPLAY UNIT)
FLD Driver (GU-3750-1), IC101 60pin
• [VFD_RST]: "H" level?
• The test mode "T0" is executed.
The FL tube display turns all on?

N.G. → GU-3749-1(MAIN UNIT)
(1) Check Soldering of CX211
GU-3750-1(DISPLAY UNIT)
(2) GU-3750-1 is N.G.

O.K.

END

データバスの確認
GU-3750-1(DISPLAY UNIT)
FLD Driver(GU-3750-1), IC101 60pin
・[VFD_RST]: "H" level?
・テストモード T0 実行 全点灯 OK?

N.G. → GU-3749-1(MAIN UNIT)
(1) CX211 の半田付けを確認
GU-3750-1(DISPLAY UNIT)
(2) GU-3750-1 の不良

O.K.

終了

### 2.2. Image is not displayed. (Blue-back, DENON wallpaper)

Check Digital output signal for Video. [1]
GU-3749-1(MAIN UNIT)
• [IC154] 4pin: PCLK
• [IC157] 176~183pin: YUV(0-7)

N.G. → Check Soldering.
GU-3749-1(MAIN UNIT)
• [IC154]: 4pin, R257, R439
• [IC157]: 176-183pin

O.K.

Check Digital output signal for Video. [2]
GU-3749-1(MAIN UNIT)
• [CX211]: PCLK, 20pin
• [CX211]: YUV(0-7), 11-18pin

N.G. → Check Soldering.
GU-3749-1(MAIN UNIT)
• [CX211]: 20pin, R439
• [CX211]: 11-18pin, R283-290

O.K.

Continue to the check process of
GU-3749-2(VIDEO UNIT)

### 2.2. 映像出力せず。（ブルーバック、DENON 壁紙）

映像用デジタル信号出力確認 [1]
GU-3749-1(MAIN UNIT)
・[IC154] 4pin: PCLK
・[IC157] 176 〜 183pin: YUV(0-7)

N.G. → 半田付けを確認
GU-3749-1(MAIN UNIT)
・[IC154]: 4pin, R257, R439
・[IC157]: 176-183pin

O.K.

映像用デジタル信号出力確認 [2]
GU-3749-1(MAIN UNIT)
・[CX211]: PCLK, 20pin
・[CX211]: YUV(0-7), 11-18pin

N.G. → 半田付けを確認
GU-3749-1(MAIN UNIT)
・[CX211]: 20pin, R439
・[CX211]: 11-18pin, R283-290

O.K.

GU-3749-2(VIDEO UNIT) チェック行程へ

### 2.3. Does not Read Disc [00 00] displayed etc.

#### (1) Disc does not Rotate.

Check the Emission of Pick-up.
GU-3749-1(MAIN UNIT)
• Emission of P.U. laser O.K.?
• The test mode "T2" is executed.
Laser current O.K.?

N.G. → (1) Check Soldering of P.U.
• short-circuit?
(2) Check the circumference soldering of TR150 and TR153.
(3) Check connector insertion.
• [P.U.]-[GU-3749] FFC(CX241)
(4) Check the soldering [IC157] and circumference soldering of [IC157]
(5) Check the soldering [IC151] and circumference soldering of [IC151]

O.K.

Check Spindle drive.
GU-3749-1(MAIN UNIT)
• [SPINDLE]: "H" level?

N.G. → (1) Check soldering of [IC157]:85, 90pin
(2) Check the circumference soldering of [SPINDLE], [FGIN] signal.
(3) Check the soldering [IC151] and circumference soldering of [IC151]

O.K.

END

### 2.3. ディスク読めず [00 00] 等の表示

#### (1) ディスク回転せず

Pick-up の発光を確認
GU-3749-1(MAIN UNIT)
・P.U. レーザー発光 O.K.?
・テストモード T2 実行 レーザー電流 OK?

N.G. → (1) P.U. の半田ショートランドを確認
(2) TR150, TR153 周辺の半田付けを確認
(3) コネクタ接続を確認
・[P.U.]-[GU-3749] FFC(CX241)
(4) [IC157] とその周辺の半田付けを確認
(5) [IC151] とその周辺の半田付けを確認

O.K.

スピンドルドライブ信号の確認
GU-3749-1(MAIN UNIT)
・[SPINDLE]: "H" level?

N.G. → (1) [IC157] 85, 90pin の半田付けを確認
(2) [SPINDLE] [FGIN] 信号ライン周辺の半田付けを確認
(3) [IC151] とその周辺の半田付けを確認

O.K.

終了

### (2) CD or DVD check process

Check the RF signal.
GU-3749-1(MAIN UNIT)
- Check the voltage of Test-Point (TP))
- TP[mAMON1] [AMON2]: differential output about 700mVp-p

**N.G.** → Check Soldering.
GU-3749-1(MAIN UNIT)
- Check the circumference soldering of [IC157]

↓ **O.K.**

END

### (3) SACD check process

Check Power Supply Voltages.
GU-3749-1(MAIN UNIT)
- [IC401]
  +3.3_D2, +2.5_D2 OK?

**N.G.** → Check Soldering.
GU-3749-1(MAIN UNIT)
- [IC101](BA25BCOFP-E2)

↓ **O.K.**

Check Oscillation waveform.
GU-3749-1(MAIN UNIT)
- [IC401](CXD2753): 11pin
  33.87MHz(3.3V) OK?

**N.G.** → Check Soldering.
GU-3749-1(MAIN UNIT)
- [IC401]: 11pin, R271

↓ **O.K.**

Check Reset signal.
GU-3749-1(MAIN UNIT)
- [IC401]: 9pin
  "H" level OK?

**N.G.** → Check Soldering.
GU-3749-1(MAIN UNIT)
- R422

↓ **O.K.**

Check Bus Line.
GU-3749-1(MAIN UNIT)
Check Address, Data Bus between
[IC401] and [IC409](SDRAM)
"H" ⇔ "L" alternate?

**N.G.** → Check Soldering.
- Address, Data Bus, Control Signal.
  [DQ0-7], [D_MA0-11], [DCLK], [DCKE], [DWE], [DCAS], [DRAS]
- R440-459, R404-408

↓ **O.K.**

Check Data Line.
GU-3749-1(MAIN UNIT)
- [SD0-7], [XSAC], [XSHD2], [SDCK], [SDEF], [XSRQ]
  "H" ⇔ "L" alternate?

**N.G.** → Check Soldering.
GU-3749-1(MAIN UNIT)
- [IC401]:164-176pin, R271
- [IC414]

↓ **O.K.**

Check signal for Water Mark.
GU-3749-1(MAIN UNIT)
- PSP_MCK, PSP_WAD1-PSP_WAD7
  "H" ⇔ "L" alternate?
- The test mode "TE" is executed. 190 over?

**N.G.** → Check Soldering.
GU-3749-1(MAIN UNIT)
- [IC401]: 1, 23, 117-120, 111-114pin
  R418, R421, RR406-411

↓ **O.K.**

END

### (2) CD or DVD チェック工程

RF 信号の確認
GU-3749-1(MAIN UNIT)
・テストポイント (TP) の電圧確認
・TP [AMON1] [AMON2]: 差動出力 約 700mVp-p

**N.G.** → 半田付けを確認
GU-3749-1(MAIN UNIT)
・[IC157] とその周辺の半田付けを確認

↓ **O.K.**

終了

### (3) SACD チェック工程

電源電圧確認
GU-3749-1(MAIN UNIT)
・[IC401]
  +3.3_D2, +2.5_D2 OK?

**N.G.** → 半田付けを確認
・GU-3749-1(MAIN UNIT)
・[IC101](BA25BCOFP-E2)

↓ **O.K.**

発振波形確認
GU-3749-1(MAIN UNIT)
・[IC401](CXD2753): 11pin
  33.87MHz(3.3V) OK?

**N.G.** → 半田付けを確認
GU-3749-1(MAIN UNIT)
・[IC401]: 11pin, R271

↓ **O.K.**

RESET 信号の確認
GU-3749-1(MAIN UNIT)
・[IC401]: 9pin
  "H" level OK?

**N.G.** → 半田付けを確認
GU-3749-1(MAIN UNIT)
・R422

↓ **O.K.**

バスラインの確認
GU-3749-1(MAIN UNIT)
・[IC401] と [IC409](SDRAM) 間の
  アドレス、データバスの確認
  "H" ⇔ "L" 切替

**N.G.** → 半田付けを確認
・アドレス、データ、制御信号
  [DQ0-7], [D_MA0-11], [DCLK], [DCKE], [DWE], [NCAS], [NRAS]
・R440-459, R404-408

↓ **O.K.**

データラインの確認
GU-3749-1(MAIN UNIT)
・[SD0-7], [XSAC], [XSHD2], [SDCK], [SDEF], [XSRQ]
  "H" ⇔ "L" 切替

**N.G.** → 半田付けを確認
GU-3749-1(MAIN UNIT)
・[IC401]: 164-176pin, R271
・[IC414]

↓ **O.K.**

ウォーターマーク用信号の確認
GU-3749-1(MAIN UNIT)
・PSP_MCK, PSP_WAD1-PSP_WAD7
  "H" ⇔ "L" 切替
・テストモード TE 実行 190 以上？

**N.G.** → 半田付けを確認
GU-3749-1(MAIN UNIT)
・[IC401]: 1, 23, 117-120, 111-114pin
  R418, R421, RR406-411

↓ **O.K.**

終了

## 3. GU-3749-2 (VIDEO UNIT)

### (1) Interlace output [Y, Cb, Cr] does not outputted.

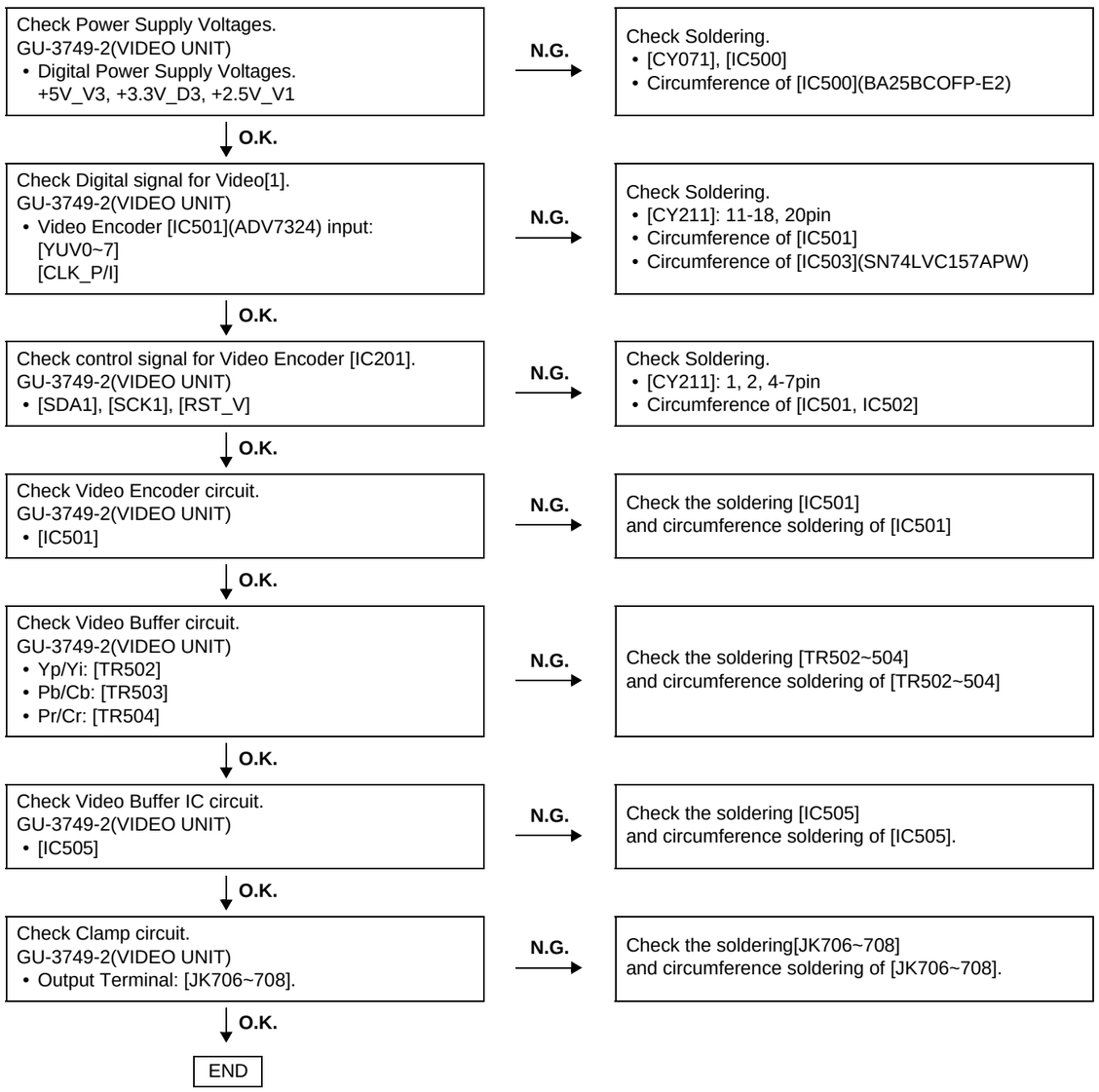


## 3. GU-3749-2 (VIDEO UNIT)

### (1) インターレース映像 [Y, Cb, Cr] 出力せず

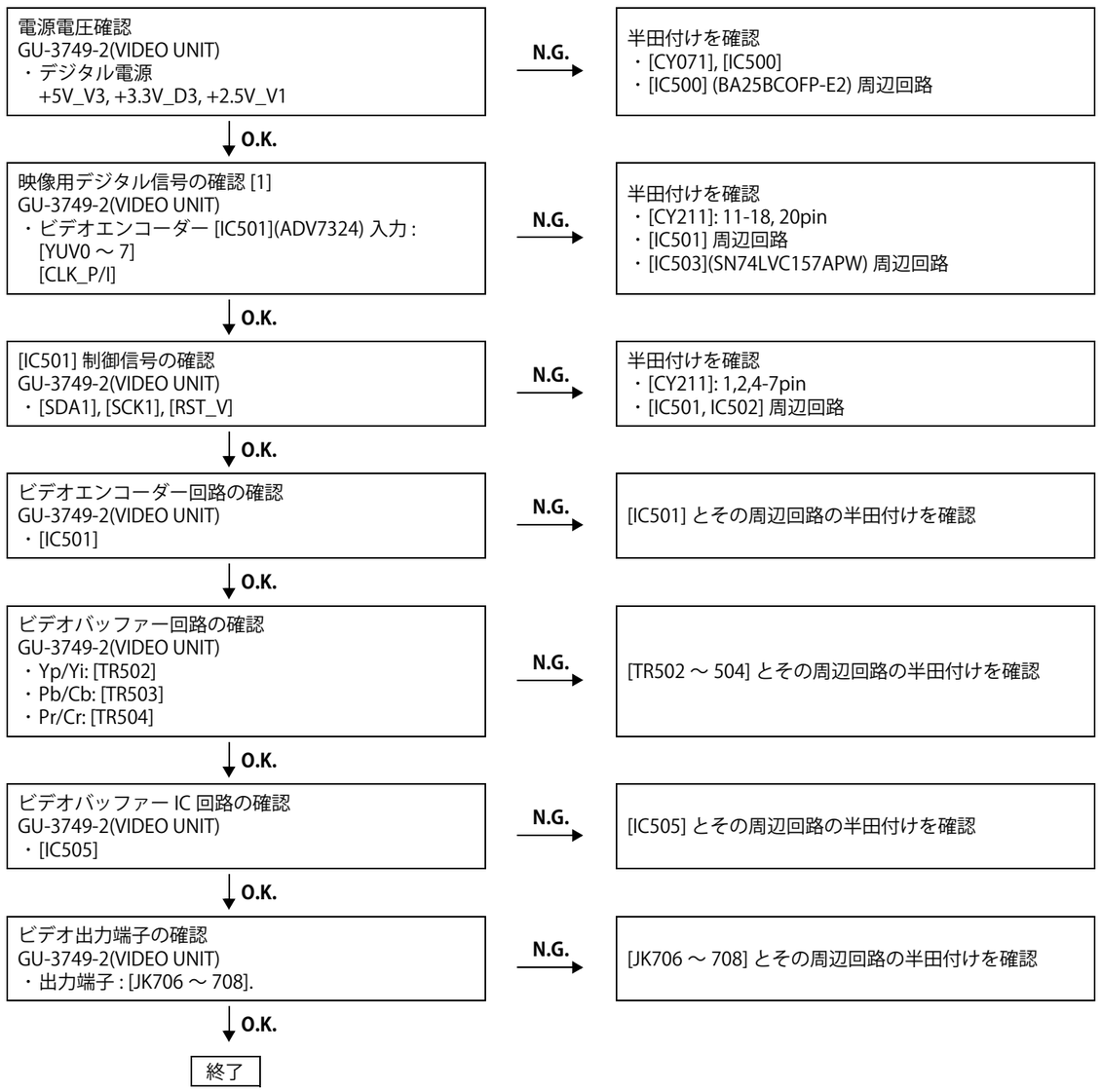

**(2) Interlace output [V-OUT, S-OUT] does not outputted.**

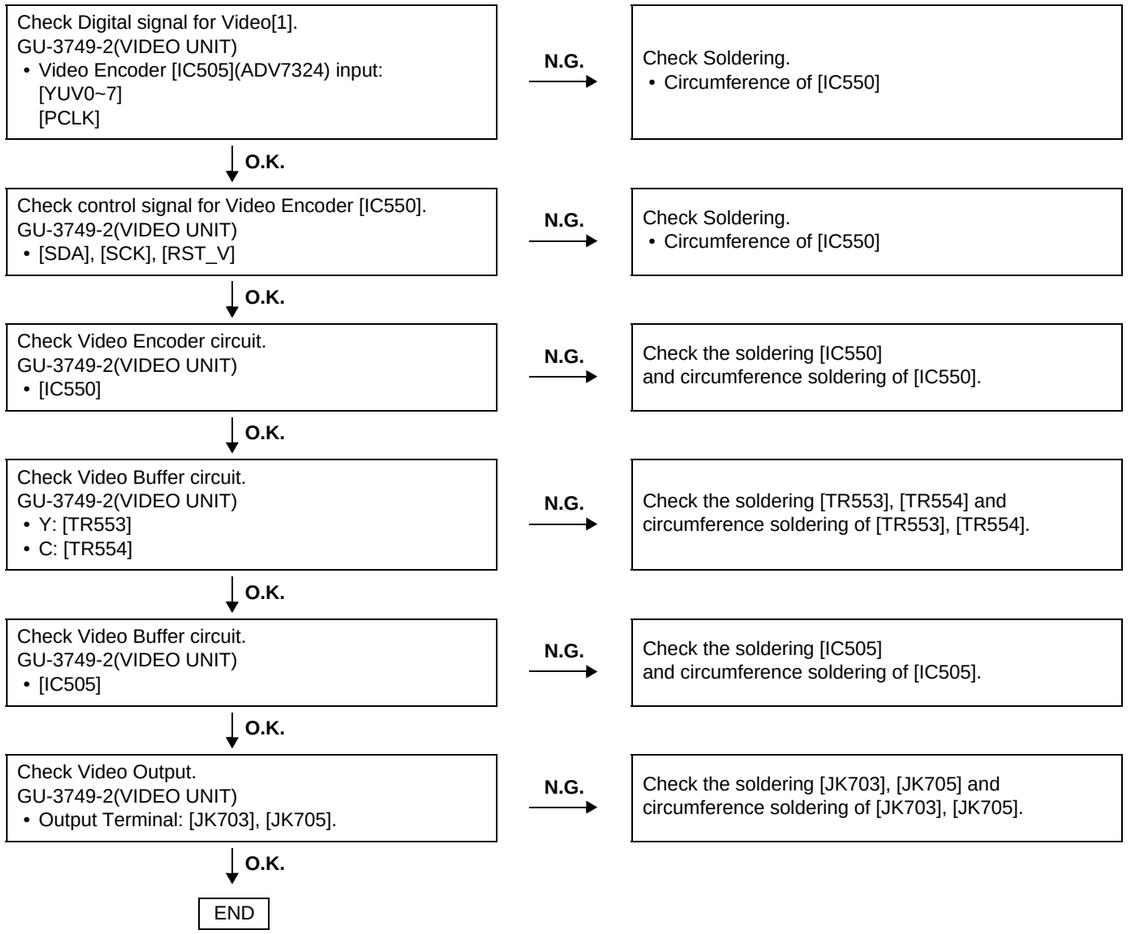


**(2) インターレース映像 [V-OUT, S-OUT] 出力せず**

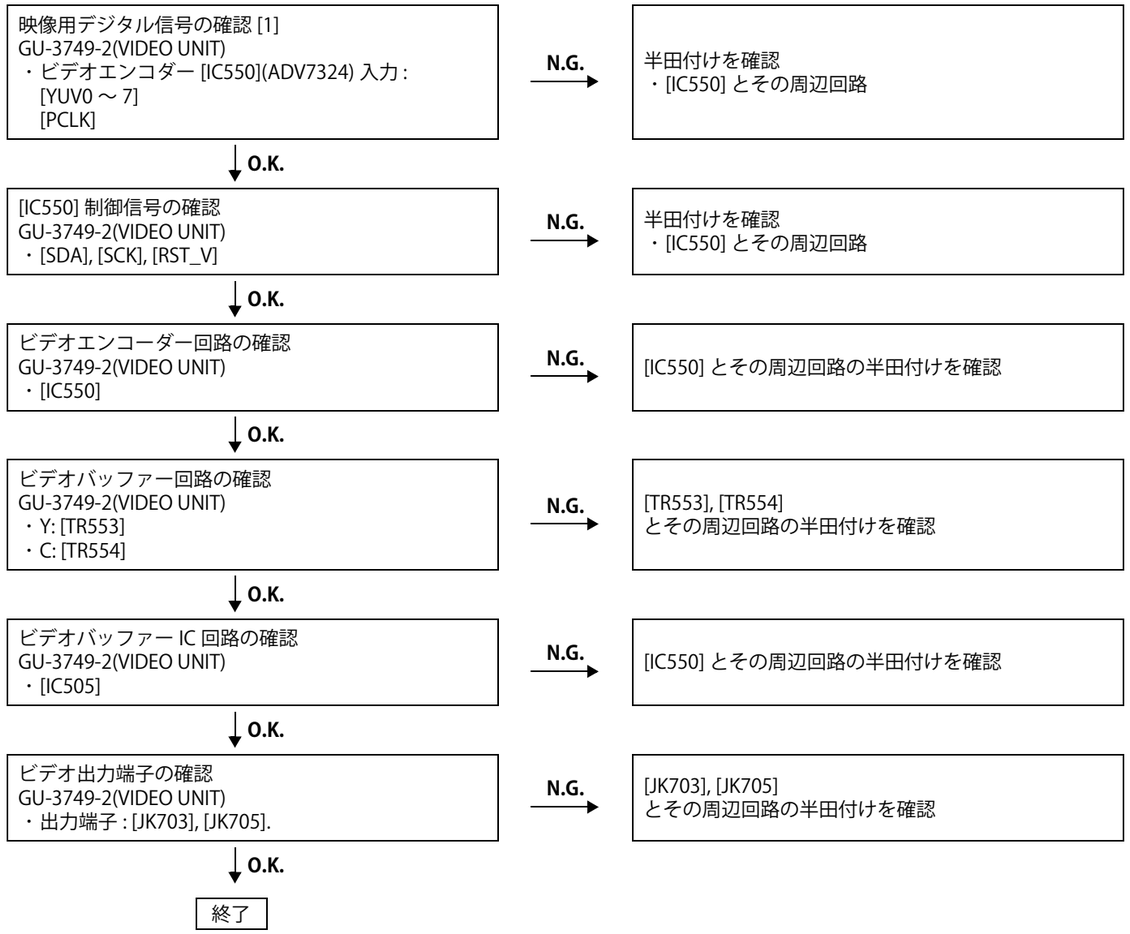

## 4. GU-3749-2 (VIDEO UNIT)/GU-3752(IP UNIT)

### (1) Progressive output [Y, Pb, Pr] does not outputted.

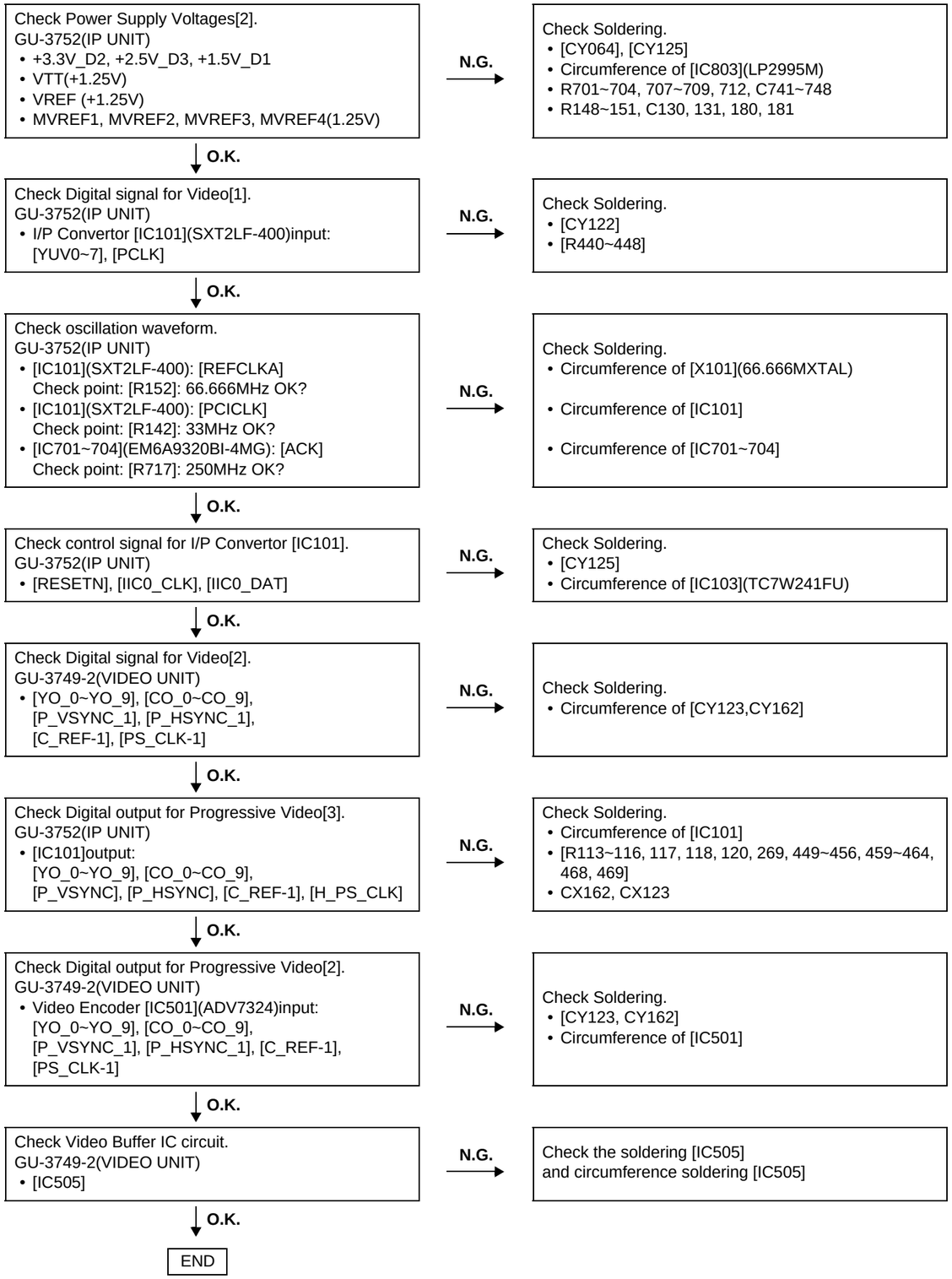


## 4. GU-3749-2 (VIDEO UNIT)/GU-3752(IP UNIT)

### (1) プログレッシブ映像 [Y, Pb, Pr] 出力せず

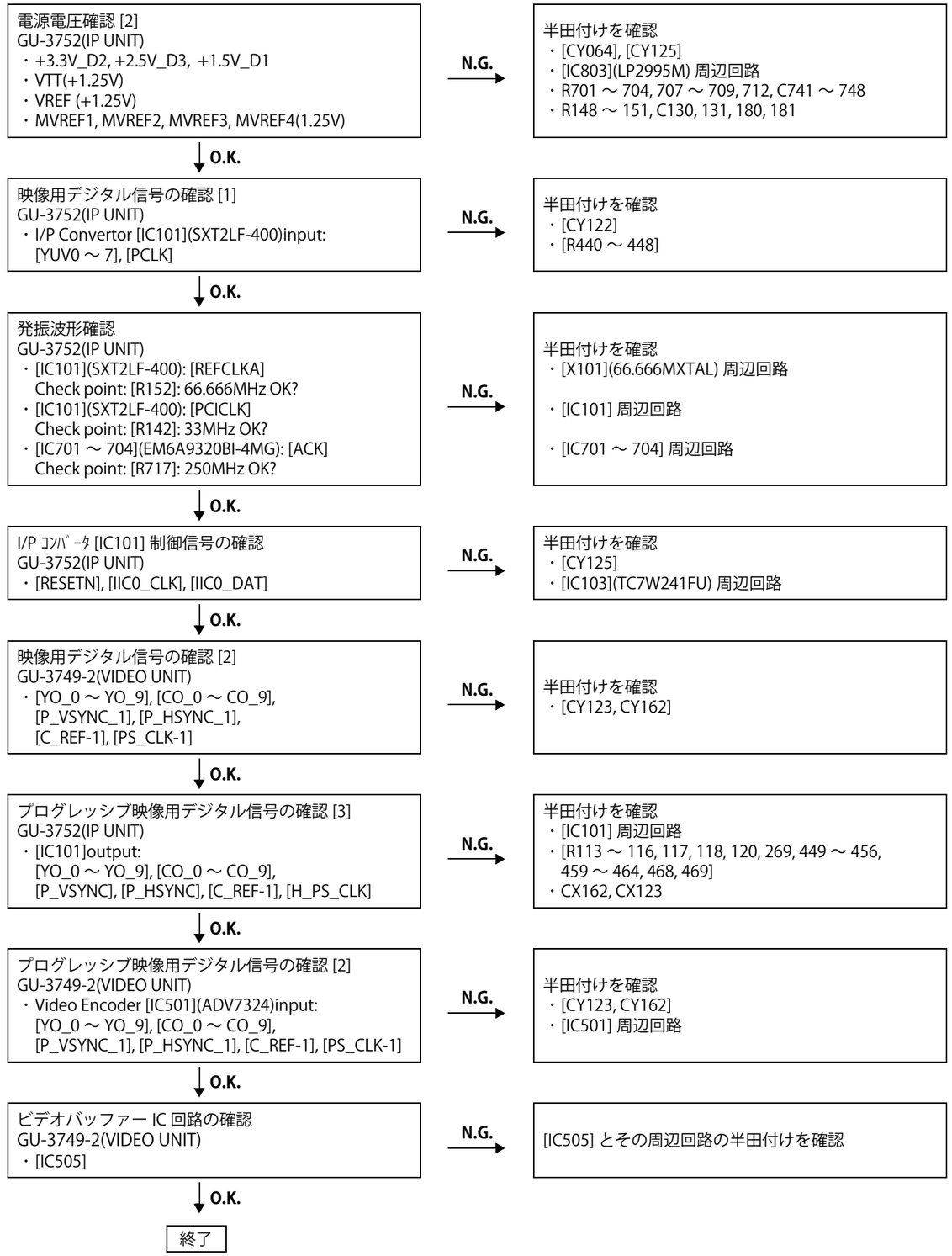

## 5. GU-3751-1 (AUDIO (DIGITAL) UNIT)/GU-3751-2/3 (AUDIO/MIX/5.1 UNIT)

### (1) CD, DVD-VIDEO/AUDIO, (SACD-SOURCE DIRECT OFF)

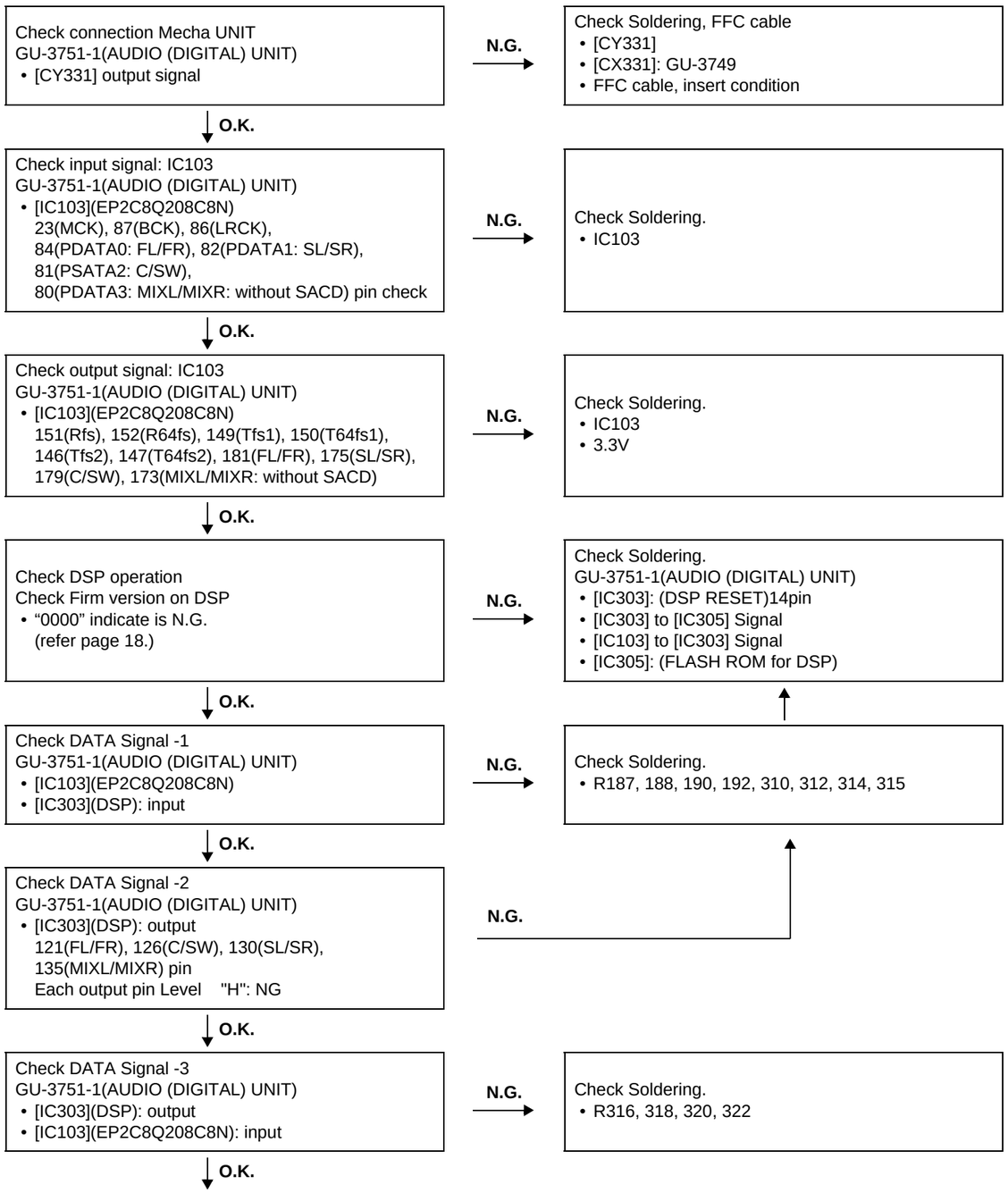


## 5. GU-3751-1 (AUDIO (DIGITAL) UNIT)/GU-3751-2/3 (AUDIO/MIX/5.1 UNIT)

### (1) CD,DVD-VIDEO/AUDIO

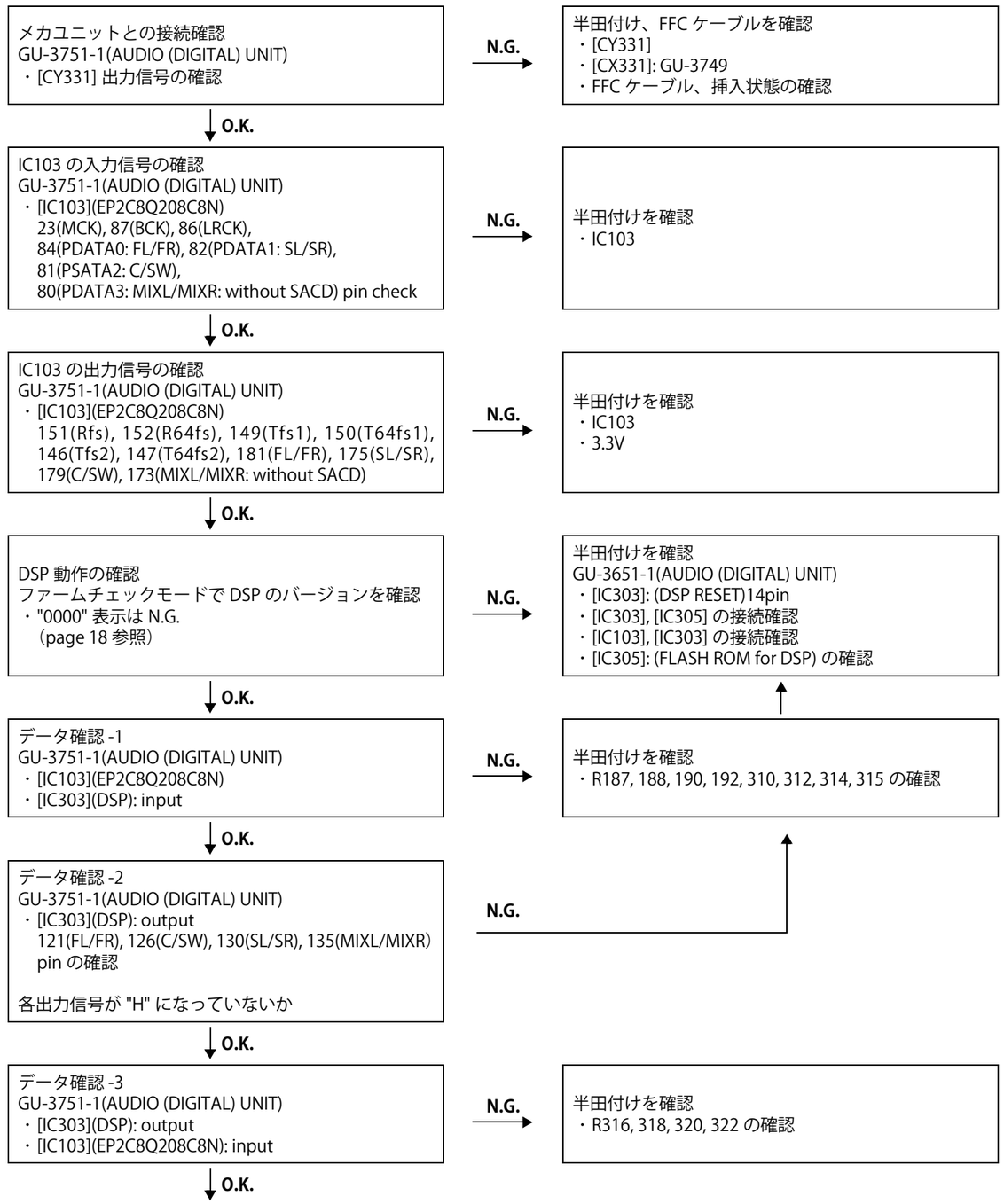

Check DATA Signal -4
GU-3751-1(AUDIO (DIGITAL) UNIT)
• [IC103](EP2C8Q208C8N):
output to DAC(MIXL/MIXR/FL/FR/C/SW/SL/SR)
4~6, 8, 10~15, 30, 31, 33pin
GU-3751-2(AUDIO/MIX UNIT)
• [IC702](DAC for MIXL), [IC707](DAC for MIXR)
4~7pin(WCK=16/8/4fs, BCK=1024/512/256fs,
DATA,MCK=1024/512/256fs)
* fs=48/96/192
GU-3751-2(AUDIO/5.1 UNIT)
• [IC401](DAC for FL/FR),
[IC406](DAC for C/SW),
[IC411](DAC for SL/SR) : input
4~7pin(LRCK=1fs, BCK=64fs, DATA, MCK=256fs)

**N.G.** →

Check Soldering.
• CX125, CY125, CX126, CY126,
CX127, CY127, CX129, CY129
(GU-3751-1 to GU-3751-2 or GU-3751-3)

↓ **O.K.**

Check DAC output
GU-3751-2(AUDIO/MIX UNIT)
• [IC702] [IC707]: output
GU-3751-3(AUDIO/5.1 UNIT)
• [IC401] [IC406] [IC411]: output

**N.G.** →

Check Soldering./Check Supply Voltages.
• [IC702] [IC707]
10~12, 14pin(control line)
• [IC401] [IC406] [IC411]
10~12, 14pin(control line)

↓ **O.K.**

Check OP AMP output
GU-3751-2(AUDIO/MIX UNIT)
• [IC703]~[IC706], [IC708]~[IC711]
GU-3751-3(AUDIO/5.1 UNIT)
• [IC402]~[IC405], [IC407]~[IC410], [IC412]~[IC415]

**N.G.** →

Check Soldering./Check Power Supply Voltages.
• [IC703]~[IC706], [IC708]~[IC711]
POWER C,R
• [IC402]~[IC405], [IC407]~[IC410], [IC412]~[IC415]
POWER C,R

↓ **O.K.**

Check AUDIO OUT
GU-3751-2(AUDIO/MIX UNIT)
• Check OUTPUT terminal (Each channels)
GU-3751-3(AUDIO/5.1 UNIT)
• Check OUTPUT terminal (Each channels)

**N.G.** →

Check Soldering.
• MUTE circuit: MUTE TR (TR709~712, TR715~718,
TR721,722)
TR408~437
TR-BASE terminal: about -9V (at MUTE off)
• Check Soldering. Output Jack

↓ **O.K.**

END

データ確認 -4
GU-3751-1(AUDIO (DIGITAL) UNIT)
・[IC103](EP2C8Q208C8N):
output to DAC(MIXL/MIXR/FL/FR/C/SW/SL/SR)
4 ～ 6, 8, 10 ～ 15, 30, 31, 33pin
GU-3751-2(AUDIO/MIX UNIT)
・[IC702](DAC for MIXL), [IC707](DAC for MIXR)
4 ～ 7pin(WCK=16/8/4fs, BCK=1024/512/256fs,
DATA,MCK=1024/512/256fs)
* fs=48/96/192
GU-3751-3(AUDIO/5.1 UNIT)
・[IC401](DAC for FL/FR),
[IC406](DAC for C/SW),
[IC411](DAC for SL/SR) : input
4 ～ 7pin(LRCK=1fs, BCK=64fs, DATA, MCK=256fs)

**N.G.** →

半田付けを確認
・CX125, CY125, CX126, CY126,
CX127, CY127, CX129, CY129
(GU-3751-1 to GU-3751-2 or GU-3751-3)

↓ **O.K.**

DAC 出力確認
GU-3751-2(AUDIO/MIX UNIT)
・[IC702] [IC707]: output
GU-3751-3(AUDIO/5.1 UNIT)
・[IC401] [IC406] [IC411]: output

**N.G.** →

半田付けを確認 / 電源を確認
・[IC702] [IC707]
10 ～ 12, 14pin(control line)
・[IC401] [IC406] [IC411]
10 ～ 12, 14pin(control line)

↓ **O.K.**

OP AMP 出力確認
GU-3751-2(AUDIO/MIX UNIT)
・[IC703] ～ [IC706], [IC708] ～ [IC711]
GU-3751-3(AUDIO/5.1 UNIT)
・[IC402]～[IC405], [IC407]～[IC410], [IC412]～[IC415]

**N.G.** →

半田付けを確認
・[IC703] ～ [IC706], [IC708] ～ [IC711]
POWER C, R
・[IC402]～[IC405], [IC407]～[IC410], [IC412]～[IC415]
POWER C, R

↓ **O.K.**

出力端子の確認
GU-3751-2(AUDIO/MIX UNIT)
・各 ch の OUTPUT 端子からの出力信号を確認する
GU-3751-3(AUDIO/5.1 UNIT)
・各 ch の OUTPUT 端子からの出力信号を確認する

**N.G.** →

半田付けを確認
・MUTE circuit: MUTE TR (TR709 ～ 712, TR715 ～ 718,
TR721,722)
TR408 ～ 437
TR-BASE terminal: about -9V (at MUTE off)
・Check Soldering. Output Jack

↓ **O.K.**

終了

## (2) SACD

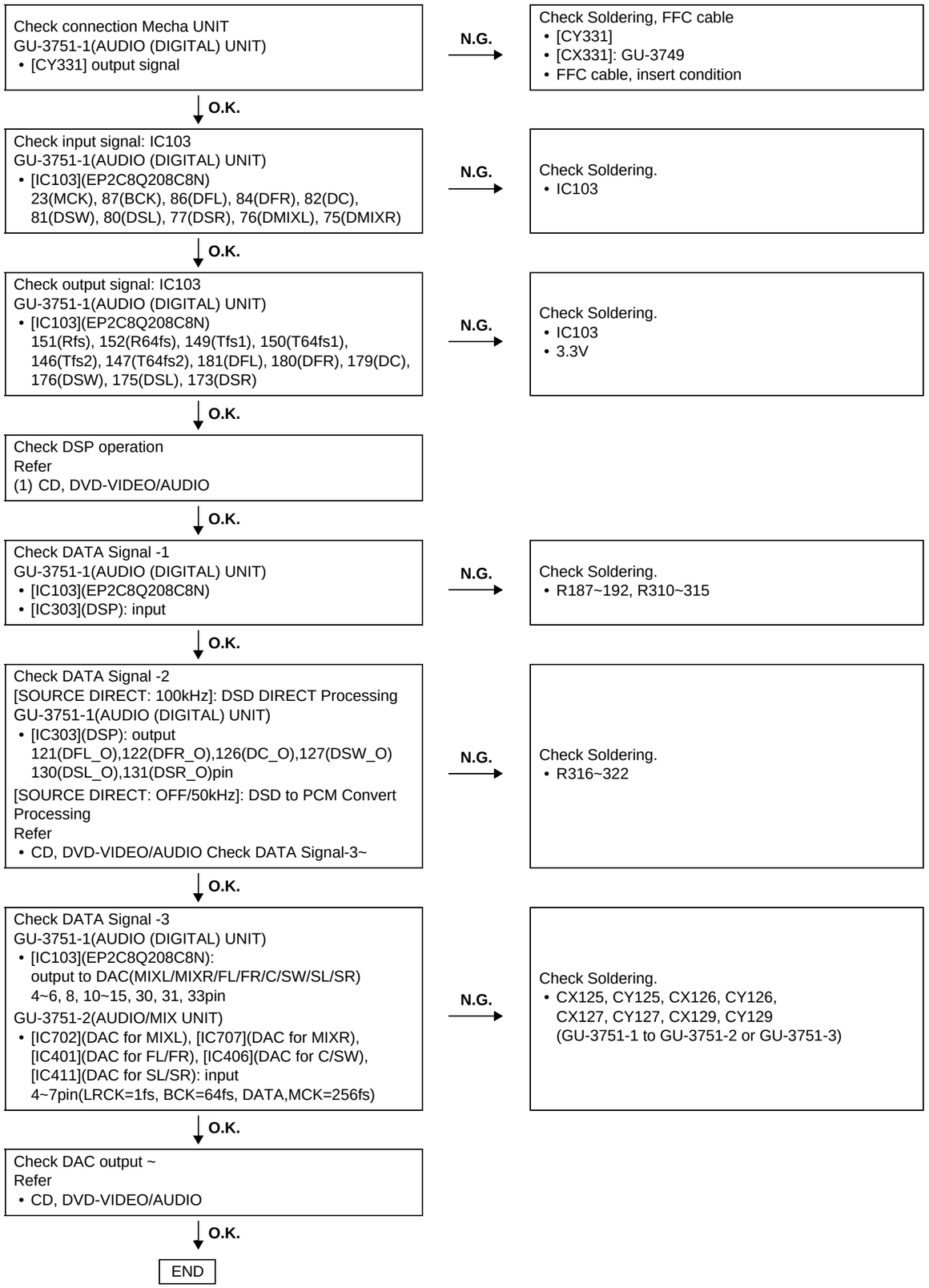
Check connection Mecha UNIT
GU-3751-1(AUDIO (DIGITAL) UNIT)
• [CY331] output signal
N.G.
Check Soldering, FFC cable
• [CY331]
• [CX331]: GU-3749
• FFC cable, insert condition
O.K.
Check input signal: IC103
GU-3751-1(AUDIO (DIGITAL) UNIT)
• [IC103](EP2C8Q208C8N)
23(MCK), 87(BCK), 86(DFL), 84(DFR), 82(DC),
81(DSW), 80(DSL), 77(DSR), 76(DMIXL), 75(DMIXR)
N.G.
Check Soldering.
• IC103
O.K.
Check output signal: IC103
GU-3751-1(AUDIO (DIGITAL) UNIT)
• [IC103](EP2C8Q208C8N)
151(Rfs), 152(R64fs), 149(Tfs1), 150(T64fs1),
146(Tfs2), 147(T64fs2), 181(DFL), 180(DFR), 179(DC),
176(DSW), 175(DSL), 173(DSR)
N.G.
Check Soldering.
• IC103
• 3.3V
O.K.
Check DSP operation
Refer
(1) CD, DVD-VIDEO/AUDIO
O.K.
Check DATA Signal -1
GU-3751-1(AUDIO (DIGITAL) UNIT)
• [IC103](EP2C8Q208C8N)
• [IC303](DSP): input
N.G.
Check Soldering.
• R187~192, R310~315
O.K.
Check DATA Signal -2
[SOURCE DIRECT: 100kHz]: DSD DIRECT Processing
GU-3751-1(AUDIO (DIGITAL) UNIT)
• [IC303](DSP): output
121(DFL_O),122(DFR_O),126(DC_O),127(DSW_O)
130(DSL_O),131(DSR_O)pin
[SOURCE DIRECT: OFF/50kHz]: DSD to PCM Convert Processing
Refer
• CD, DVD-VIDEO/AUDIO Check DATA Signal-3~
N.G.
Check Soldering.
• R316~322
O.K.
Check DATA Signal -3
GU-3751-1(AUDIO (DIGITAL) UNIT)
• [IC103](EP2C8Q208C8N):
output to DAC(MIXL/MIXR/FL/FR/C/SW/SL/SR)
4~6, 8, 10~15, 30, 31, 33pin
GU-3751-2(AUDIO/MIX UNIT)
• [IC702](DAC for MIXL), [IC707](DAC for MIXR),
[IC401](DAC for FL/FR), [IC406](DAC for C/SW),
[IC411](DAC for SL/SR): input
4~7pin(LRCK=1fs, BCK=64fs, DATA,MCK=256fs)
N.G.
Check Soldering.
• CX125, CY125, CX126, CY126,
CX127, CY127, CX129, CY129
(GU-3751-1 to GU-3751-2 or GU-3751-3)
O.K.
Check DAC output ~
Refer
• CD, DVD-VIDEO/AUDIO
O.K.
END

## (2) SACD

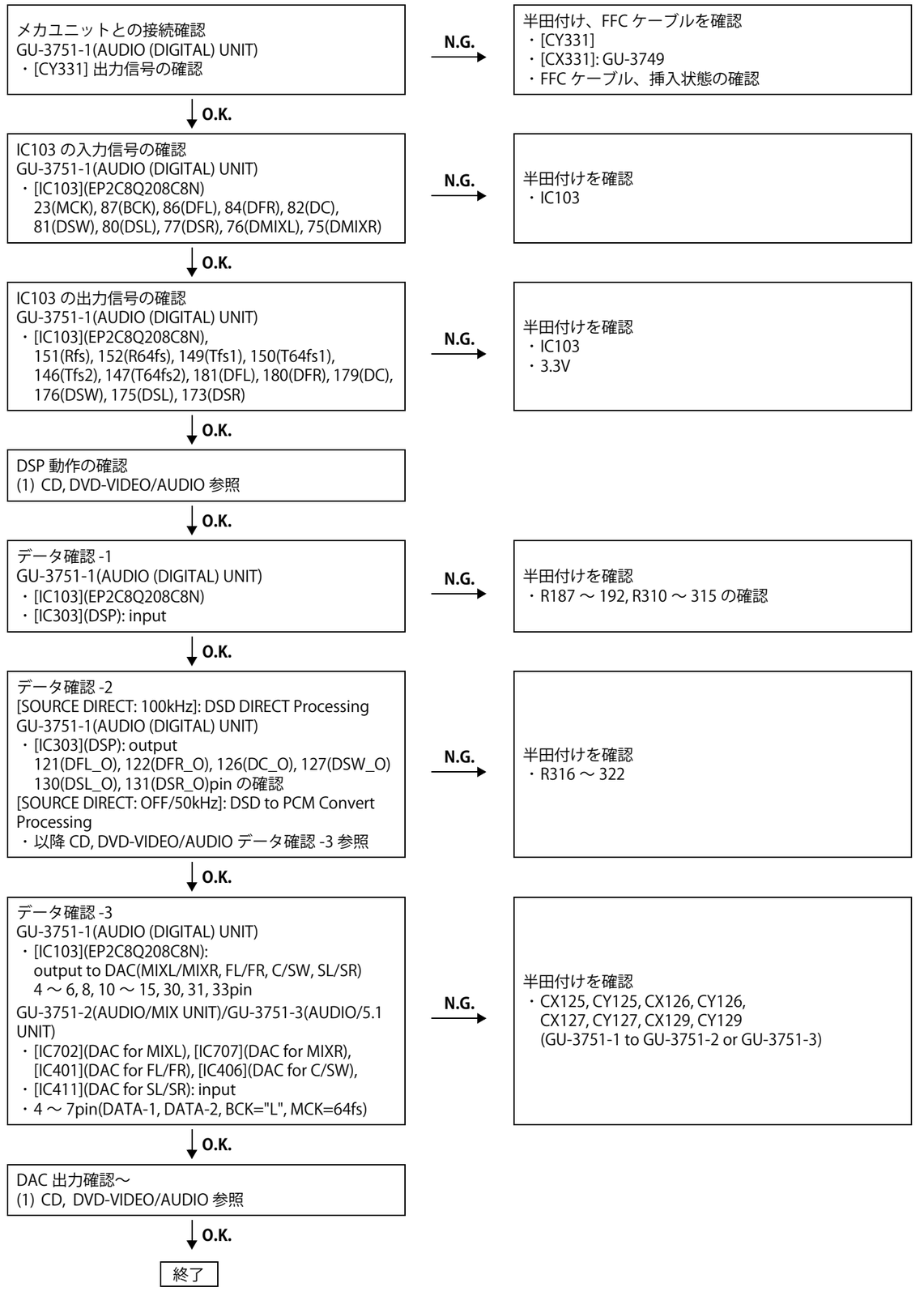
メカユニットとの接続確認
GU-3751-1(AUDIO (DIGITAL) UNIT)
・[CY331] 出力信号の確認
N.G.
半田付け、FFC ケーブルを確認
・[CY331]
・[CX331]: GU-3749
・FFC ケーブル、挿入状態の確認
O.K.
IC103 の入力信号の確認
GU-3751-1(AUDIO (DIGITAL) UNIT)
・[IC103](EP2C8Q208C8N)
23(MCK), 87(BCK), 86(DFL), 84(DFR), 82(DC),
81(DSW), 80(DSL), 77(DSR), 76(DMIXL), 75(DMIXR)
N.G.
半田付けを確認
・IC103
O.K.
IC103 の出力信号の確認
GU-3751-1(AUDIO (DIGITAL) UNIT)
・[IC103](EP2C8Q208C8N),
151(Rfs), 152(R64fs), 149(Tfs1), 150(T64fs1),
146(Tfs2), 147(T64fs2), 181(DFL), 180(DFR), 179(DC),
176(DSW), 175(DSL), 173(DSR)
N.G.
半田付けを確認
・IC103
・3.3V
O.K.
DSP 動作の確認
(1) CD, DVD-VIDEO/AUDIO 参照
O.K.
データ確認 -1
GU-3751-1(AUDIO (DIGITAL) UNIT)
・[IC103](EP2C8Q208C8N)
・[IC303](DSP): input
N.G.
半田付けを確認
・R187 ～ 192, R310 ～ 315 の確認
O.K.
データ確認 -2
[SOURCE DIRECT: 100kHz]: DSD DIRECT Processing
GU-3751-1(AUDIO (DIGITAL) UNIT)
・[IC303](DSP): output
121(DFL_O), 122(DFR_O), 126(DC_O), 127(DSW_O)
130(DSL_O), 131(DSR_O)pin の確認
[SOURCE DIRECT: OFF/50kHz]: DSD to PCM Convert Processing
・以降 CD, DVD-VIDEO/AUDIO データ確認 -3 参照
N.G.
半田付けを確認
・R316 ～ 322
O.K.
データ確認 -3
GU-3751-1(AUDIO (DIGITAL) UNIT)
・[IC103](EP2C8Q208C8N):
output to DAC(MIXL/MIXR, FL/FR, C/SW, SL/SR)
4 ～ 6, 8, 10 ～ 15, 30, 31, 33pin
GU-3751-2(AUDIO/MIX UNIT)/GU-3751-3(AUDIO/5.1 UNIT)
・[IC702](DAC for MIXL), [IC707](DAC for MIXR),
[IC401](DAC for FL/FR), [IC406](DAC for C/SW),
・[IC411](DAC for SL/SR): input
・4 ～ 7pin(DATA-1, DATA-2, BCK="L", MCK=64fs)
N.G.
半田付けを確認
・CX125, CY125, CX126, CY126,
CX127, CY127, CX129, CY129
(GU-3751-1 to GU-3751-2 or GU-3751-3)
O.K.
DAC 出力確認～
(1) CD, DVD-VIDEO/AUDIO 参照
O.K.
終了

# ELECTRICAL ADJUSTMENT FOR VIDEO

## 1. SETTING

(1) Connect the monitor TV to the video output terminal.
(2) Connect the oscilloscope to the Y-signal and C-signal of S-VIDEO output terminal and each terminate at 75 Ohms.
(3) Connect the oscilloscope to the Y-signal, $P_B$-signal and $P_R$-signal of Component video output terminal and each terminate at 75 Ohms.
※ **Use the 75 Ohms resistance must be 1%**
(4) DVD test disc : DVDT-S01

## 2. BEFORE ADJUSTMENT

### 2.1. Setting the Oscilloscope as below.

(1) $P_B/P_R$
(a) TIME/DIV : 20μS
(b) VOLT/DIV : 100mV
**(Use the probe : x10 )**
(2) Y/C
(a) TIME/DIV : 20μS
(b) VOLT/DIV : 50mV
**(Use the probe : x10 )**
Power on. Power Supply

| | | |
|---|---|---|
| U.S.A. & Canada | : | 120V |
| Europe & Asia | : | 230V |
| Japan | : | 100V |

### 2.2. Preparation

(1) Power on.
(2) Check the Component output signal is progressive. ("PROGRESSIVE" is shown on the FL display)
(3) Check the HDMI output is off. ("HDMI" is not shown on the FL display)
(4) Push [OPEN/CLOSE] button, then open the Disc Tray.
(5) Set DVD test disc (DVDT-S01) on the Disc Tray, and then push [CLOSE] button.
(6) FL display appear "STOP", push [PLAY] button to play-back DVD.
(7) Push the [DISPLAY] button of remote control unit and then appear the ON-Screen Display (GUI) on the monitor TV.
(8) Push the [+10] and [2] button, select title 12 of DVD.
(9) Push the [ENTER] button, playback title 12. (color bar 75%)

# ビデオ回路の調整

## 1. セッティング手順

(1) セットの VIDEO OUT 端子にテレビモニターを接続する。
(2) セットの S2 VIDEO OUT 端子から Y 信号と C 信号をそれぞれオシロスコープ（終端抵抗：75Ω）に接続する。
(3) セットの COMPONENT VIDEO OUT の端子（$Y/P_B/P_R$）をそれぞれオシロスコープ（終端抵抗：75Ω）に接続する。
※ 75Ω 抵抗は 1%品を使用する事。
(4) DVD テストディスク：DVDT-S01 を用意する。

## 2. 調整のまえに

### 2.1. オシロスコープを下記に設定する。

(1) $P_B/P_R$
(a) TIME/DIV : 20μS
(b) VOLT/DIV : 100mV
（プローブ x10 使用）
(2) Y/C
(a) TIME/DIV : 20μS
(b) VOLT/DIV : 50mV
（プローブ x10 使用）
電源電圧 ：100V (Japan)
：120V (U.S.A. & Canada)
：230V (Europe & Asia)

### 2.2. 準備手順

(1) セットの AC コードをコンセントへ挿入し、セットの電源を ON する。
(2) セットの COMPONENT VIDEO OUT 端子の出力が PROGRESSIVE になっていることを確認する。
(FL 管の "PROGRESSIVE" が点灯していること )
(3) HDMI 出力が OFF になっていることを確認する。
(FL 管の "HDMI" が消灯していること )
(4) セットの「OPEN/CLOSE」ボタンを押しトレイを開き、トレイ上に DVD テストディスク（DVDT-S01）をセット後、「CLOSE」ボタンを押す。
(5) セット表示管上に "STOP" が表示されてから、PLAY ボタンを押し、ディスクを再生する。
(6) リモコンの DISPLAY ボタンを押しグラフィカル・ユーザー・インターフェイス (GUI) 画面を出す。
(7) 番号ボタンの [+10][2] ボタンを押し、Title 12 を選択する。
(8) 「ENTER」ボタンを押し、Title 12 を再生する（75%カラーバー信号）。

## 3. PROCEDURE

(1) Adjust the signal of S-VIDEO out by the wave of oscilloscope.

(a) Target, Y-signal

Point : VR551
Adjustment Value : 1000 ± 20mV
Waveform

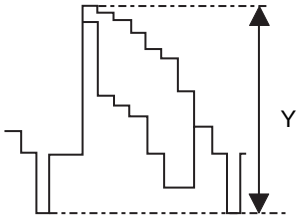


Y-signal of S-VIDEO out

(b) Target, C-signal

Check Value : 286 ± 10mV
Waveform

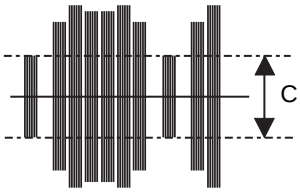


C-signal of S-VIDEO out

(2) Adjust the signal of COMPONENT OUT (PROGRESSIVE) by the wave of oscilloscope.

(a) Target, Y-signal

Point : VR501
Adjustment Value : 1000 ± 20mV
Waveform

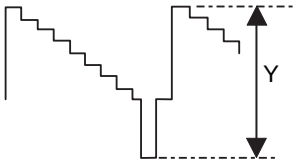


Y-signal

(b) Target, PB-signal

Check Value : *525 ± 10mV
Waveform

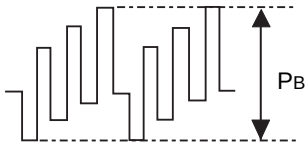


PB-signal

## 3. 手順

(1) セットの S2 VIDEO OUT の信号レベルをオシロスコープ上の波高値で調整する。

(a) Y 信号レベル

調整個所 ：VR551
調整値 ：1000 ± 20mV
波形

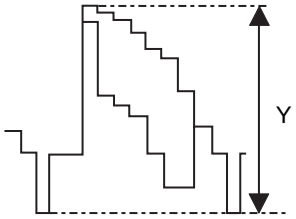


S2 VIDEO OUT の Y 信号レベル

(b) C 信号レベル

確認 ：286 ± 10mV
波形

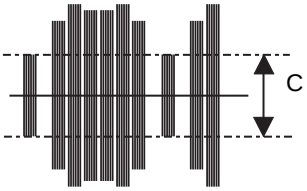


S2 VIDEO OUT の C 信号レベル

(2) COMPONENT OUT (PROGRESSIVE) の信号レベルをオシロスコープ上の波高値で調整する。

(a) Y 信号レベル

調整個所 ：VR501
調整値 ：1000 ± 20mV
波形

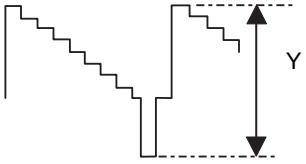


プログレッシブの Y 信号レベル

(b) PB 信号レベル

確認 ：525 ± 10mV
波形

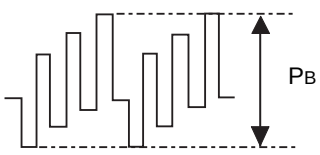


PB 信号レベル

(c) Target, PR-signal

Check Value : *525 ± 10mV

Waveform

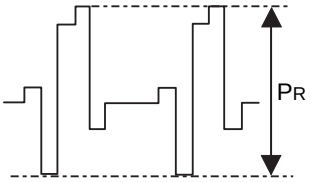


PR-signal

(c) PR 信号レベル

調整値 ：525 ± 10mV

波形

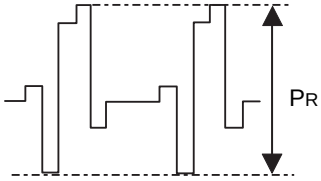


PR 信号レベル

* : 486 ± 10mV for U.S.A. & Canada model

## BLOCK DIAGRAM

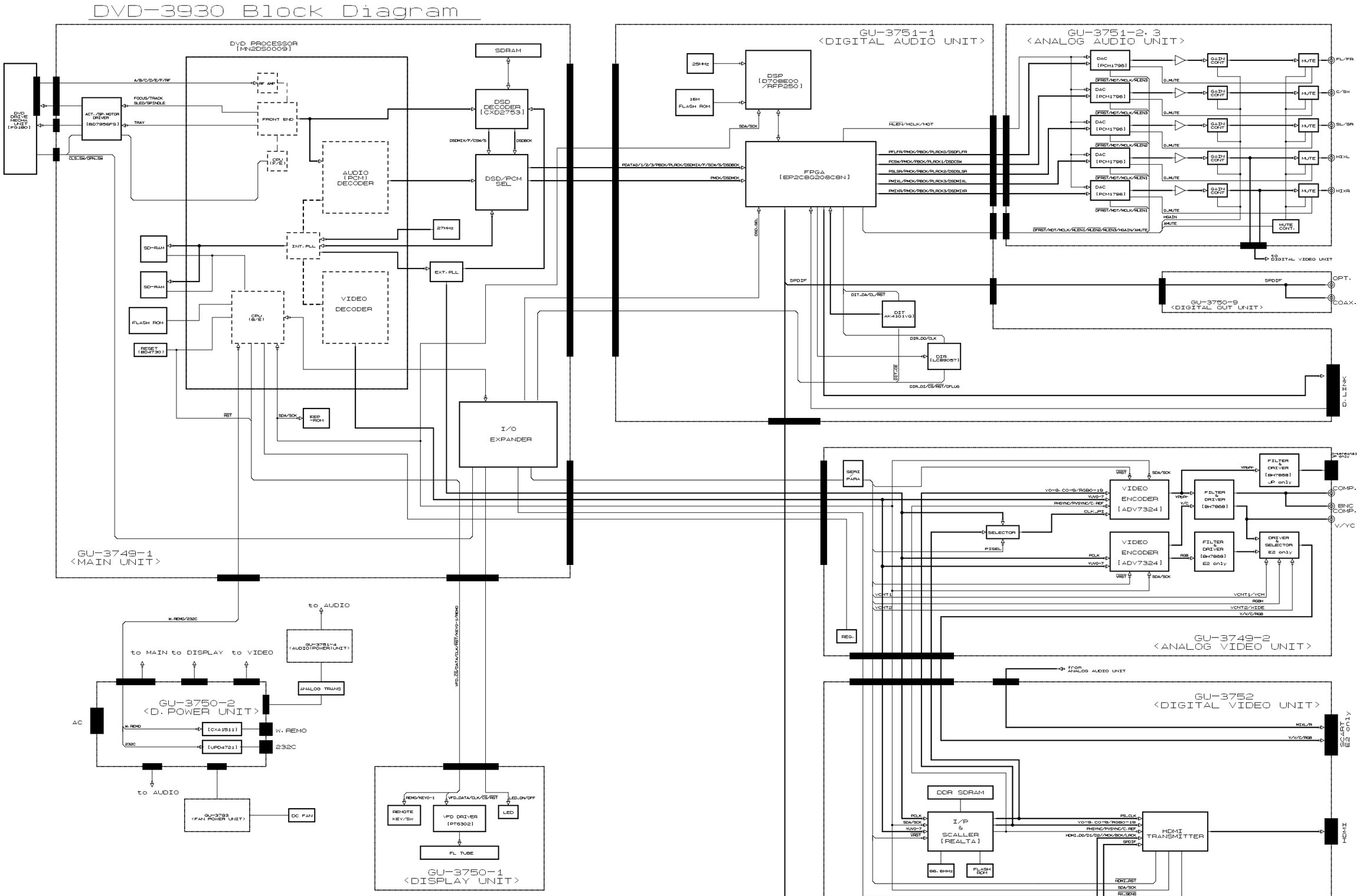

# SEMICONDUCTORS

Only major semiconductors are shown, general semiconductors etc. are omitted to list.
主な半導体を記載しています。汎用の半導体は記載を省略しています。

## 1. IC's

Note : Abbreviation ahead of IC No. indicates the name of P.W.B., etc.
注 ) : IC No. の前の記号は、基板の名称を表します。

MA : MAIN/A. VIDEO P.W.B.　　PD : POWER/DISPLAY P.W.B.
AU : AUDIO P.W.B.　　DI : DIGITAL VIDEO P.W.B.

### D708E001RFP250 (AU: IC303)

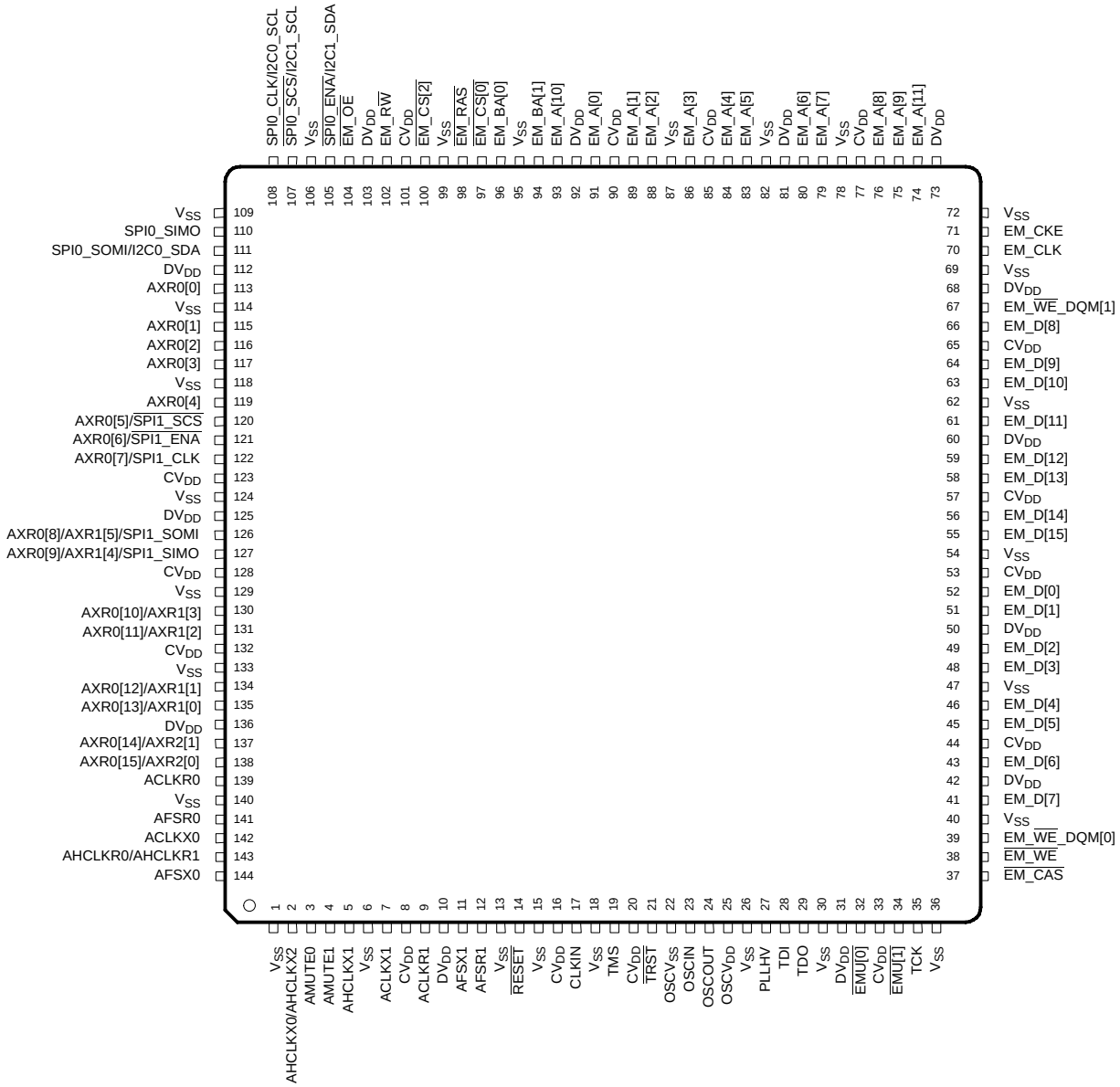


### D708E001RFP250 Terminal Function

| Pin No. | Signal Name | Type | Description |
|---|---|---|---|
| 1 | VSS | - | Ground |
| 2 | AHCLKX0/AHCLKX2 | I/O | McASP0 and McASP2 Transmit Master Clock |
| 3 | AMUTE0 | O | McASP0 MUTE Output |
| 4 | AMUTE1 | O | McASP1 MUTE Output |
| 5 | AHCLKX1 | I/O | McASP1 Transmit Master Clock |
| 6 | VSS | - | Ground |
| 7 | ACLKX1 | I/O | McASP1 Transmit Bit Clock |
| 8 | CVDD | - | Core Supply |
| 9 | ACLKR1 | I/O | McASP1 Receive Bit Clock |
| 10 | DVDD | - | I/O Supply |
| 11 | AFSX1 | I/O | McASP1 Transmit Frame Sync (L/R Clock) |
| 12 | AFSR1 | I/O | McASP1 Receive Frame Sync (L/R Clock) |

| Pin No. | Signal Name | Type | Description |
|---|---|---|---|
| 13 | $V_{SS}$ | - | Ground |
| 14 | $\overline{RESET}$ | I | Device reset pin |
| 15 | $V_{SS}$ | - | Ground |
| 16 | $CV_{DD}$ | - | Core Supply |
| 17 | CLKIN | I | Alternate clock input (3.3-V LVCMOS Input) |
| 18 | $V_{SS}$ | - | Ground |
| 19 | TMS | I | Test Mode Select |
| 20 | $CV_{DD}$ | - | Core Supply |
| 21 | $\overline{TRST}$ | I | Test Reset |
| 22 | $OSCV_{SS}$ | PWR | Oscillator VSS tap point (for filter only) |
| 23 | OSCIN | I | 1.2-V Oscillator Input |
| 24 | OSCOUT | O | 1.2-V Oscillator Output |
| 25 | OSCVDD | PWR | Oscillator 1.2-V VDD tap point (for filter only) |
| 26 | $V_{SS}$ | - | Ground |
| 27 | PLLHV | PWR | PLL 3.3-V Supply Input (requires external filter) |
| 28 | TDI | I | Test Data In |
| 29 | TDO | OZ | Test Data Out |
| 30 | $V_{SS}$ | - | Ground |
| 31 | $DV_{DD}$ | - | I/O Supply |
| 32 | $\overline{EMU[0]}$ | I/O | Emulation Pin 0 |
| 33 | $CV_{DD}$ | - | Core Supply |
| 34 | $\overline{EMU[1]}$ | I/O | Emulation Pin 1 |
| 35 | TCK | I | Test Clock |
| 36 | $V_{SS}$ | - | Ground |
| 37 | $\overline{EM\_CAS}$ | O | SDRAM Column Address Strobe |
| 38 | $\overline{EM\_WE}$ | O | SDRAM Write Enable |
| 39 | EM_$\overline{WE}$_DQM[0] | O | Write Enable or Byte Enable for EM_D[7:0] |
| 40 | $V_{SS}$ | - | Ground |
| 41 | EM_D[7] | I/O | EMIF Data Bus [Lower 16 Bits] |
| 42 | $DV_{DD}$ | - | I/O Supply |
| 43 | EM_D[6] | I/O | EMIF Data Bus [Lower 16 Bits] |
| 44 | $CV_{DD}$ | - | Core Supply |
| 45 | EM_D[5] | I/O | EMIF Data Bus [Lower 16 Bits] |
| 46 | EM_D[4] | I/O | EMIF Data Bus [Lower 16 Bits] |
| 47 | $V_{SS}$ | - | Ground |
| 48 | EM_D[3] | I/O | EMIF Data Bus [Lower 16 Bits] |
| 49 | EM_D[2] | I/O | EMIF Data Bus [Lower 16 Bits] |
| 50 | $DV_{DD}$ | - | I/O Supply |
| 51 | EM_D[1] | I/O | EMIF Data Bus [Lower 16 Bits] |
| 52 | EM_D[0] | I/O | EMIF Data Bus [Lower 16 Bits] |
| 53 | $CV_{DD}$ | - | Core Supply |
| 54 | $V_{SS}$ | - | Ground |
| 55 | EM_D[15] | I/O | EMIF Data Bus [Lower 16 Bits] |
| 56 | EM_D[14] | I/O | EMIF Data Bus [Lower 16 Bits] |
| 57 | $CV_{DD}$ | - | Core Supply |
| 58 | EM_D[13] | I/O | EMIF Data Bus [Lower 16 Bits] |
| 59 | EM_D[12] | I/O | EMIF Data Bus [Lower 16 Bits] |
| 60 | $DV_{DD}$ | - | I/O Supply |
| 61 | EM_D[11] | I/O | EMIF Data Bus [Lower 16 Bits] |
| 62 | $V_{SS}$ | - | Ground |
| 63 | EM_D[10] | I/O | EMIF Data Bus [Lower 16 Bits] |
| 64 | EM_D[9] | I/O | EMIF Data Bus [Lower 16 Bits] |
| 65 | $CV_{DD}$ | - | Core Supply |
| 66 | EM_D[8] | I/O | EMIF Data Bus [Lower 16 Bits] |
| 67 | EM_$\overline{WE}$_DQM[1] | O | Write Enable or Byte Enable for EM_D[15:8] |
| 68 | $DV_{DD}$ | - | I/O Supply |
| 69 | $V_{SS}$ | - | Ground |
| 70 | EM_CLK | O | SDRAM Clock |
| 71 | EM_CKE | O | SDRAM Clock Enable |
| 72 | $V_{SS}$ | - | Ground |
| 73 | $DV_{DD}$ | - | I/O Supply |
| 74 | EM_A[11] | O | EMIF Address Bus |
| 75 | EM_A[9] | O | EMIF Address Bus |
| 76 | EM_A[8] | O | EMIF Address Bus |
| 77 | $CV_{DD}$ | - | Core Supply |
| 78 | $V_{SS}$ | - | Ground |
| 79 | EM_A[7] | O | EMIF Address Bus |

| Pin No. | Signal Name | Type | Description |
|---|---|---|---|
| 80 | EM_A[6] | O | EMIF Address Bus |
| 81 | $DV_{DD}$ | - | I/O Supply |
| 82 | $V_{SS}$ | - | Ground |
| 83 | EM_A[5] | O | EMIF Address Bus |
| 84 | EM_A[4] | O | EMIF Address Bus |
| 85 | $CV_{DD}$ | - | Core Supply |
| 86 | EM_A[3] | O | EMIF Address Bus |
| 87 | $V_{SS}$ | - | Ground |
| 88 | EM_A[2] | O | EMIF Address Bus |
| 89 | EM_A[1] | O | EMIF Address Bus |
| 90 | $CV_{DD}$ | - | Core Supply |
| 91 | EM_A[0] | O | EMIF Address Bus |
| 92 | $DV_{DD}$ | - | I/O Supply |
| 93 | EM_A[10] | O | EMIF Address Bus |
| 94 | EM_BA[1] | O | SDRAM Bank Address and Asynchronous Memory Low-Order Address |
| 95 | $V_{SS}$ | - | Ground |
| 96 | EM_BA[0] | O | SDRAM Bank Address and Asynchronous Memory Low-Order Address |
| 97 | $\overline{\text{EM\_CS[0]}}$ | O | SDRAM Chip Select |
| 98 | $\overline{\text{EM\_RAS}}$ | O | SDRAM Row Address Strobe |
| 99 | $V_{SS}$ | - | Ground |
| 100 | $\overline{\text{EM\_CS[2]}}$ | O | Asynchronous Memory Chip Select |
| 101 | $CV_{DD}$ | - | Core Supply |
| 102 | EM_$\overline{\text{W}}$ | O | Asynchronous Memory Read/not Write |
| 103 | $DV_{DD}$ | - | I/O Supply |
| 104 | $\overline{\text{EM\_OE}}$ | O | SDRAM Output Enable |
| 105 | $\overline{\text{SPI0\_ENA}}$/I2C1_SDA | I/O | SPI0 Enable (Ready) or I2C1 Serial Data |
| 106 | $V_{SS}$ | - | Ground |
| 107 | $\overline{\text{SPI0\_SCS}}$/I2C1_SCL | I/O | SPI0 Slave Chip Select or I2C1 Serial Clock |
| 108 | SPI0_CLK/I2C0_SCL | I/O | SPI0 Serial Clock or I2C0 Serial Clock |
| 109 | $V_{SS}$ | - | Ground |
| 110 | SPI0_SIMO | I/O | SPI0 Data Pin Slave In Master Out |
| 111 | SPI0_SOMI/I2C0_SDA | I/O | SPI0 Data Pin Slave Out Master In or I2C0 Serial Data |
| 112 | $DV_{DD}$ | - | I/O Supply |
| 113 | AXR0[0] | I/O | McASP0 Serial Data 0 |
| 114 | $V_{SS}$ | - | Ground |
| 115 | AXR0[1] | I/O | McASP0 Serial Data 1 |
| 116 | AXR0[2] | I/O | McASP0 Serial Data 2 |
| 117 | AXR0[3] | I/O | McASP0 Serial Data 3 |
| 118 | $V_{SS}$ | - | Ground |
| 119 | AXR0[4] | I/O | McASP0 Serial Data 4 |
| 120 | AXR0[5]/$\overline{\text{SPI1\_SCS}}$ | I/O | McASP0 Serial Data 5 or SPI1 Slave Chip Select |
| 121 | AXR0[6]/$\overline{\text{SPI1\_ENA}}$ | I/O | McASP0 Serial Data 6 or SPI1 Enable (Ready) |
| 122 | AXR0[7]/SPI1_CLK | I/O | McASP0 Serial Data 7 or SPI1 Serial Clock |
| 123 | $CV_{DD}$ | - | Core Supply |
| 124 | $V_{SS}$ | - | Ground |
| 125 | $DV_{DD}$ | - | I/O Supply |
| 126 | AXR0[8]/AXR1[5]/SPI1_SOMI | I/O | McASP0 Serial Data 8 or McASP1 Serial Data 5 or SPI1 Data Pin Slave Out Master In |
| 127 | AXR0[9]/AXR1[4]/SPI1_SIMO | I/O | McASP0 Serial Data 9 or McASP1 Serial Data 4 or SPI1 Data Pin Slave In Master Out |
| 128 | $CV_{DD}$ | - | Core Supply |
| 129 | $V_{SS}$ | - | Ground |
| 130 | AXR0[10]/AXR1[3] | I/O | McASP0 Serial Data 10 or McASP1 Serial Data 3 |
| 131 | AXR0[11]/AXR1[2] | I/O | McASP0 Serial Data 11 or McASP1 Serial Data 2 |
| 132 | $CV_{DD}$ | - | Core Supply |
| 133 | $V_{SS}$ | - | Ground |
| 134 | AXR0[12]/AXR1[1] | I/O | McASP0 Serial Data 12 or McASP1 Serial Data 1 |
| 135 | AXR0[13]/AXR1[0] | I/O | McASP0 Serial Data 13 or McASP1 Serial Data 0 |
| 136 | $DV_{DD}$ | - | I/O Supply |
| 137 | AXR0[14]/AXR2[1] | I/O | McASP0 Serial Data 14 or McASP2 Serial Data 1 |
| 138 | AXR0[15]/AXR2[0] | I/O | McASP0 Serial Data 15 or McASP2 Serial Data 0 |
| 139 | ACLKR0 | I/O | McASP0 Receive Bit Clock |
| 140 | $V_{SS}$ | - | Ground |
| 141 | AFSR0 | I/O | McASP0 Receive Frame Sync (L/R Clock) |
| 142 | ACLKX0 | I/O | McASP0 Transmit Bit Clock |
| 143 | AHCLKR0/AHCLKR1 | I/O | McASP0 and McASP1 Receive Master Clock |
| 144 | AFSX0 | I/O | McASP0 Transmit Frame Sync (L/R Clock) |

## MN2DS0009AA (MA: IC157)

### MN2DS0009AA Terminal Function

| Pin No. | Pin Name | Type | Symbol | Function |
|---|---|---|---|---|
| 1 | MDQ18 | I/O | SDRAM DATA18 | SDRAM data 18 |
| 2 | VSS | - | GND | GND |
| 3 | VDD33 | - | 3.3V | I/O supply |
| 4 | MDQ28 | I/O | SDRAM DATA28 | SDRAM data 28 |
| 5 | MDQ19 | I/O | SDRAM DATA19 | SDRAM data 19 |
| 6 | MDQ27 | I/O | SDRAM DATA27 | SDRAM data 27 |
| 7 | MDQ20 | I/O | SDRAM DATA20 | SDRAM data 20 |
| 8 | VDD33 | - | 3.3V | I/O supply |
| 9 | VSS | - | GND | GND |
| 10 | MDQ26 | I/O | SDRAM DATA26 | SDRAM data 26 |
| 11 | MDQ21 | I/O | SDRAM DATA21 | SDRAM data 21 |
| 12 | MDQ25 | I/O | SDRAM DATA25 | SDRAM data 25 |
| 13 | MDQ22 | I/O | SDRAM DATA22 | SDRAM data 22 |
| 14 | MDQ24 | I/O | SDRAM DATA24 | SDRAM data 24 |
| 15 | MDQ23 | I/O | SDRAM DATA23 | SDRAM data 23 |
| 16 | VSS | - | GND | GND |
| 17 | VDD33 | - | 3.3V | I/O supply |
| 18 | EXADTO | I/O | EXT ADRC | External memory address 0 / data 0 |
| 19 | NEXCE | O | EXT CE | External memory chip select |
| 20 | NEXOE | O | EXT OE | External memory output enable |
| 21 | VSS | - | GND | GND |
| 22 | VDD12 | - | 1.2V | Logic supply |
| 23 | EXDTO | I/O | EXT MEMORY DATA0 | External memory data 0 |
| 24 | EXDT8 | I/O | EXT MEMORY DATA8 | External memory data 8 |
| 25 | EXDT1 | I/O | EXT MEMORY DATA1 | External memory data 1 |
| 26 | EXDT9 | I/O | EXT MEMORY DATA9 | External memory data 9 |
| 27 | EXDT2 | I/O | EXT MEMORY DATA2 | External memory data 2 |
| 28 | EXDT10 | I/O | EXT MEMORY DATA10 | External memory data 10 |
| 29 | EXDT3 | I/O | EXT MEMORY DATA3 | External memory data 3 |
| 30 | EXDT11 | I/O | EXT MEMORY DATA11 | External memory data 11 |
| 31 | EXDT4 | I/O | EXT MEMORY DATA4 | External memory data 4 |
| 32 | EXDT12 | I/O | EXT MEMORY DATA12 | External memory data 12 |
| 33 | EXDT5 | I/O | EXT MEMORY DATA5 | External memory data 5 |
| 34 | VSS | - | GND | GND |
| 35 | VDD33 | - | 3.3V | I/O supply |
| 36 | EXDT13 | I/O | EXT MEMORY DATA13 | External memory data 13 |
| 37 | EXDT6 | I/O | EXT MEMORY DATA6 | External memory data 6 |
| 38 | EXDT14 | I/O | EXT MEMORY DATA14 | External memory data 14 |
| 39 | EXDT7 | I/O | EXT MEMORY DATA7 | External memory data 7 |
| 40 | EXDT15 | I/O | EXT MEMORY DATA15 | External memory data 15 |
| 41 | EXADR161 | I/O | EXT ADR16 | External memory address 16 |
| 42 | EXADT152 | I/O | EXT ADT15 | External memory address 15 / data 8 |
| 43 | EXADT142 | I/O | EXT ADT14 | External memory address 14 / data 1 |
| 44 | VSS | - | GND | GND |
| 45 | VDD12 | - | 1.2V | Logic supply |
| 46 | EXADT13 | I/O | EXT ADR13 | External memory address 13 / data 9 |
| 47 | EXADT12 | I/O | EXT ADR12 | External memory address 12 / data 2 |
| 48 | EXADT11 | I/O | EXT ADR11 | External memory address 11 / data 10 |
| 49 | EXADT10 | I/O | EXT ADR10 | External memory address 10 / data 3 |
| 50 | EXADT9 | I/O | EXT ADR9 | External memory address 9 / data 11 |
| 51 | EXADT8 | I/O | EXT ADR8 | External memory address 8 / data 4 |
| 52 | VSS | - | GND | GND |
| 53 | VDD33 | - | 3.3V | I/O supply |
| 54 | EXADR19 | I/O | EXT ADR19 | External memory address 19 |
| 55 | NEXWE | O | EXT WE | External memory write enable |
| 56 | EXADR183 | I/O | EXT ADR18 | External memory address 18 |
| 57 | EXADR174 | I/O | EXT ADR17 | External memory address 17 |
| 58 | EXADT7 | I/O | EXT ADR7 | External memory address 7 / data 12 |
| 59 | EXADT6 | I/O | EXT ADR6 | External memory address 6 / data 5 |
| 60 | EXADT5 | I/O | EXT ADR5 | External memory address 5 / data 13 |
| 61 | EXADT4 | I/O | EXT ADR4 | External memory address 4 / data 6 |
| 62 | EXADT3 | I/O | EXT ADR3 | External memory address 3 / data 14 |
| 63 | EXADT2 | I/O | EXT ADR2 | External memory address 2 / data 7 |

| Pin No. | Pin Name | Type | Symbol | Function |
|---|---|---|---|---|
| 64 | EXADT1 | I/O | EXT ADR1 | External memory address 1 / data 15 |
| 65 | P0 | I/O | EXT ADR20 | External memory address 20 |
| 66 | P1 | I/O | SDA | Serial 0 output data |
| 67 | P2 | I/O | SCL | Serial 0 clock |
| 68 | VSS | - | GND | GND |
| 69 | VDD33 | - | 3.3V | I/O supply |
| 70 | P3 | I/O | SYSRXD | Serial 1 input data |
| 71 | P4 | I/O | SYSTXD | Serial 1 output data |
| 72 | P5 | I/O | REMO/INTST | External interrupt 2 |
| 73 | P6 | I/O | V-CS | Serial 2 input data |
| 74 | P7 | I/O | V-DATA | Serial 2 output data |
| 75 | P8 | I/O | V-CLK | Serial 2 clock |
| 76 | P9 | I/O | MSDATAI | Serial 3 input data |
| 77 | P10 | I/O | MSDATAO | Serial 3 output data |
| 78 | P11 | I/O | MSCLK | Serial 3 clock |
| 79 | P12 | I/O | CS1 | Extension chip select |
| 80 | P13 | I/O | SACD-READY | Serial 3 data receipt flag |
| 81 | P14 | I/O | MSLAT | Serial 3 data transmit flag |
| 82 | VSS | - | GND | GND |
| 83 | VDD12 | - | 1.2V | Logic supply |
| 84 | NRST | I | RESET | Master reset |
| 85 | FG | I/O | FG-IN | System ucom port 21 |
| 86 | DRV5 | I/O | CD/DVD | System ucom port 15 |
| 87 | DRV4 | I/O | IN_SW | System ucom port 16 |
| 88 | DRV3 | I/O | HFM_ON/OFF | System ucom port 17 |
| 89 | DRV2 | I/O | TRY_DRV | System ucom port 18 |
| 90 | DRV1 | I/O | SP_DRV | System ucom port 19 |
| 91 | DRVO | I/O | SL_DRV | System ucom port 20 |
| 92 | VSS | - | GND | GND |
| 93 | VDD33 | - | 3.3V | I/O supply |
| 94 | MONI7 | I/O | PSP-MCK/MONI7 | System ucom port 22 |
| 95 | MONI6 | I/O | PSP-WAD7/MONI6 | System ucom port 23 |
| 96 | MONI5 | I/O | PSP-WAD6/MONI5 | System ucom port 24 |
| 97 | MONI4 | I/O | PSP-WAD5/MONI4 | System ucom port 25 |
| 98 | MONI3 | I/O | PSP-WAD4/MONI3 | System ucom port 26 |
| 99 | MONI2 | I/O | PSP-WAD3/MONI2 | System ucom port 27 |
| 100 | MONI1 | I/O | PSP-WAD2/MONI1 | System ucom port 28 |
| 101 | MONIO | I/O | PSP-WAD1/MONI0 | System ucom port 29 |
| 102 | AVDDD | - | 3.3V | Analog supply |
| 103 | PLF1L1 | O | PLFIL1 | External filter for DRC-VCO |
| 104 | AVSSD | - | GND | Analog GND |
| 105 | VREFH7 | O | V-REF-H7 | ADC reference voltage for DRC (TOP) |
| 106 | VREFL7 | O | V-REF-L7 | ADC reference voltage for DRC (BTM) |
| 107 | CCAPA | O | CCAPA | Inline filter for CAPA block |
| 108 | AVSSC | - | GND | Analog GND |
| 109 | CDATA | O | CDATA | Inline filter for DATA block |
| 110 | AVDDG | - | 3.3V | Analog supply |
| 111 | ANAMONI1 | O | TP_ANAMONI1 | Internal analog monitor 1 |
| 112 | ANAMONI2 | O | TP_ANAMONI2 | Internal analog monitor 2 |
| 113 | RFINN | I | RFINN | External RF input (-) |
| 114 | RFINP | I | RFINP | External RF input (+) |
| 115 | VINIRF | I | VIN1RF | RF input 1 |
| 116 | VIN2RF | I | VIN2RF | RF input 2 |
| 117 | VIN4RF | I | VIN4RF | RF input 4 |
| 118 | VIN3RF | I | VIN3RF | RF input 3 |
| 119 | AVDDB | - | 3.3V | Analog supply |
| 120 | VREFH5 | I | V-REF-H5 | 5 bit AD reference Voltage "H" |
| 121 | VREFL5 | I | V-REF-L5 | 5 bit AD reference Voltage "L" |
| 122 | AVSSB | - | GND | Analog GND |
| 123 | LPC1 | I | LPC1 | DVD LPC input |
| 124 | LPCO1 | O | LPCO1 | DVD LPC output |
| 125 | LPC2 | I | LPC2 | CD LPC input |
| 126 | LPCO2 | O | LPCO2 | CD LPC output |
| 127 | VREFH | O | V-REFH | Reference Voltage 2.20V output |
| 128 | VHALF | O | V-HALF | Reference Voltage 1.65V output |
| 129 | VIN10 | I | VIN10 | CD head input |

| Pin No. | Pin Name | Type | Symbol | Function |
|---|---|---|---|---|
| 130 | VIN9 | I | VIN9 | CD head input |
| 131 | VIN5 | I | VIN5 | CD head input |
| 132 | VIN6 | I | VIN6 | CD head input |
| 133 | VIN7 | I | VIN7 | DVD head input |
| 134 | VIN8 | I | VIN8 | DVD head input |
| 135 | VIN3 | I | VIN3 | DVD head input |
| 136 | VIN4 | I | VIN4 | DVD head input |
| 137 | VIN2 | I | VIN2 | DVD head input |
| 138 | VIN1 | I | VIN1 | DVD head input |
| 139 | ADO | I | KEY0 | Servo AD input 0 |
| 140 | AD1 | I | KEY1 | Servo AD input 1 |
| 141 | AD2 | I | IOP_CHECK(CD/DVD) | Servo AD input 2 |
| 142 | AD4 | I | REG | Servo AD input 4 |
| 143 | AVSSH | - | GND | Analog GND |
| 144 | PWM1 | O | TR_DRV | Tracking drive output |
| 145 | PWMO | O | FO_DRV | Focus drive output |
| 146 | AVDDH | - | 3.3V | Analog supply |
| 147 | DAC3OUT | O | OPEN | Cr/R analog video output |
| 148 | DAC2OUT | O | OPEN | Cb/B analog video output |
| 149 | DAC1OUT | O | OPEN | Y/G analog video output |
| 150 | AVDDF | - | 3.3V | Analog supply for VDAC |
| 151 | COMP1 | I | COMP1 | Compensation pin for DAC1 |
| 152 | VREF | I | VREF | Reference Voltage for DAC |
| 153 | IREF1 | I | IREF1 | Bias current adjust pin for DAC |
| 154 | COMP2 | I | COMP2 | Compensation pin for DAC2 |
| 155 | AVSSF | - | GND | Analog GND for VDAC |
| 156 | DAC4OUT | O | OPEN | Y/Comp analog video output |
| 157 | DAC5OUT | O | OPEN | C analog video output |
| 158 | AVDDE | - | 3.3V | Analog supply for PLL |
| 159 | AVSSE | - | GND | Analog GND for PLL |
| 160 | AVDDG | - | 3.3V | Analog supply for PLL |
| 161 | AVSSG | - | GND | Analog GND for PLL |
| 162 | OSCI | I | OSC-IN | Oscillator input (27MHz) |
| 163 | OSCO | O | OSC-OUT | Oscillator output (27MHz) |
| 164 | VSS | - | GND | GND |
| 165 | VDD12 | - | 1.2V | Logic supply |
| 166 | DACCK | I/O | MCK/SD7 | Stream data output 7 |
| 167 | LRCK | O | LRCK/SD6 | Stream data output 6 |
| 168 | SRCK | O | BCK/SD5 | Stream data output 5 |
| 169 | ADOUT3 | O | MIXLR/SD4 | Stream data output 4 |
| 170 | ADOUT2 | I/O | DATA2/SD3 | Stream data output 3 |
| 171 | ADOUT1 | I/O | DATA1/SD2 | Stream data output 2 |
| 172 | ADOUTO | I/O | DATA0/SD1 | Stream data output 1 |
| 173 | IECOUT | O | SPDIF/SD0 | Stream data output 0 |
| 174 | VSS | - | GND | GND |
| 175 | VDD33 | - | 3.3V | I/O supply |
| 176 | VDIO7 | I/O | YC7 | Digital video input/output 7 |
| 177 | VDIO6 | I/O | YC6 | Digital video input/output 6 |
| 178 | VDIO5 | I/O | YC5 | Digital video input/output 5 |
| 179 | VDIO4 | I/O | YC4 | Digital video input/output 4 |
| 180 | VDI03 | I/O | YC3 | Digital video input/output 3 |
| 181 | VDIO2 | I/O | YC2 | Digital video input/output 2 |
| 182 | VDI01 | I/O | YC1 | Digital video input/output 1 |
| 183 | VDIOO | I/O | YC0 | Digital video input/output 0 |
| 184 | VDD33 | - | 3.3V | I/O supply |
| 185 | VSS | - | GND | GND |
| 186 | EXTRG1 | I/O | CLK27M | Video clock output |
| 187 | SCLOCK | I | SCLOCK | Input clock for debug |
| 188 | SDATA | I/O | SDATA | Input/output data for debug |
| 189 | EXTRGO | I/O | PDETECT/EXTRGO | System ucom port 41 |
| 190 | TRCCLK | I/O | CLK33M | Master clock for External AVDEC |
| 191 | TRCDATAO | I/O | SDEF | System ucom port 44 |
| 192 | TRCDATA1 | I/O | XSAK | System ucom port 45 |
| 193 | TRCDATA2 | I/O | SDCK | System ucom port 46 |
| 194 | TRCDATA3 | I/O | XSHD | System ucom port 47 |
| 195 | TRCST | I/O | XSRQ | System ucom port 48 |

| Pin No. | Pin Name | Type | Symbol | Function |
|---|---|---|---|---|
| 196 | VSS | - | GND | GND |
| 197 | VDD33 | - | 3.3V | I/O supply |
| 198 | MDQ15 | I/O | SDRAM DATA15 | SDRAM data 15 |
| 199 | MDQO | I/O | SDRAM DATA0 | SDRAM data 0 |
| 200 | MDQ14 | I/O | SDRAM DATA14 | SDRAM data 14 |
| 201 | MDQ1 | I/O | SDRAM DATA1 | SDRAM data 1 |
| 202 | MDQ13 | I/O | SDRAM DATA13 | SDRAM data 13 |
| 203 | MDQ2 | I/O | SDRAM DATA2 | SDRAM data 2 |
| 204 | VDD33 | - | 3.3V | I/O supply |
| 205 | VSS | - | GND | GND |
| 206 | MDQ12 | I/O | SDRAM DATA12 | SDRAM data 12 |
| 207 | MDQ3 | I/O | SDRAM DATA3 | SDRAM data 3 |
| 208 | MDQ11 | I/O | SDRAM DATA11 | SDRAM data 11 |
| 209 | MDQ4 | I/O | SDRAM DATA4 | SDRAM data 4 |
| 210 | MDQ10 | I/O | SDRAM DATA10 | SDRAM data 10 |
| 211 | MDQ5 | I/O | SDRAM DATA5 | SDRAM data 5 |
| 212 | MDQ9 | I/O | SDRAM DATA9 | SDRAM data 9 |
| 213 | MDQ6 | I/O | SDRAM DATA6 | SDRAM data 6 |
| 214 | VDD33 | - | 3.3V | I/O supply |
| 215 | VSS | - | GND | GND |
| 216 | MDQ8 | I/O | SDRAM DATA8 | SDRAM data 8 |
| 217 | MDQ7 | I/O | SDRAM DATA7 | SDRAM data 7 |
| 218 | VDD12 | - | 1.2V | Logic supply |
| 219 | DQMO | O | SDRAM DATA MASK0 | SDRAM data mask 0 |
| 220 | DQM1 | O | SDRAM DATA MASK1 | SDRAM data mask 1 |
| 221 | NWE | O | SDRAM WE | Write enable for SDRAM |
| 222 | VSS | - | GND | GND |
| 223 | MCK | O | SDRAM MCK | Output clock for SDRAM |
| 224 | VDD33 | - | 3.3V | I/O supply |
| 225 | MCKI | I | SDRAM MCK_RTN | Input clock from SDRAM |
| 226 | VSS | - | GND | GND |
| 227 | NCAS | O | SDRAM CAS | Column address strobe for SDRAM |
| 228 | NRAS | O | SDRAM RAS | Row address strobe for SDRAM |
| 229 | NCSM | O | SDRAM CS | Chip select for SDRAM |
| 230 | MA11 | I/O | SDRAM ADDRESS11 | SDRAM address 11 |
| 231 | BAO | O | SDRAM BA0 | SDRAM bank address 0 |
| 232 | MA9 | O | SDRAM ADDRESS9 | SDRAM address 9 |
| 233 | VSS | - | GND | GND |
| 234 | VDD12 | - | 1.2V | Logic supply |
| 235 | BA1 | O | SDRAM BA1 | SDRAM bank address 1 |
| 236 | MA8 | O | SDRAM ADDRESS8 | SDRAM address 8 |
| 237 | MA10 | O | SDRAM ADDRESS10 | SDRAM address 10 |
| 238 | VSS | - | GND | GND |
| 239 | VDD33 | - | 3.3V | I/O supply |
| 240 | MA7 | O | SDRAM ADDRESS7 | SDRAM address 7 |
| 241 | MAO | O | SDRAM ADDRESS0 | SDRAM address 0 |
| 242 | MA6 | O | SDRAM ADDRESS6 | SDRAM address 6 |
| 243 | MA1 | O | SDRAM ADDRESS1 | SDRAM address 1 |
| 244 | MA5 | O | SDRAM ADDRESS5 | SDRAM address 5 |
| 245 | MA2 | O | SDRAM ADDRESS2 | SDRAM address 2 |
| 246 | MA4 | O | SDRAM ADDRESS4 | SDRAM address 4 |
| 247 | MA3 | O | SDRAM ADDRESS3 | SDRAM address 3 |
| 248 | VSS | - | GND | GND |
| 249 | VDD33 | - | 3.3V | I/O supply |
| 250 | DQM2 | I/O | SDRAM DATA MASK2 | SDRAM data mask 2 |
| 251 | DQM3 | I/O | SDRAM DATA MASK3 | SDRAM data mask 3 |
| 252 | MDQ31 | I/O | SDRAM DATA31 | SDRAM data 31 |
| 253 | MDQ16 | I/O | SDRAM DATA16 | SDRAM data 16 |
| 254 | MDQ30 | I/O | SDRAM DATA30 | SDRAM data 30 |
| 255 | MDQ17 | I/O | SDRAM DATA17 | SDRAM data 17 |
| 256 | MDQ29 | I/O | SDRAM DATA29 | SDRAM data 29 |

**BD7956FS (MA: IC151)**

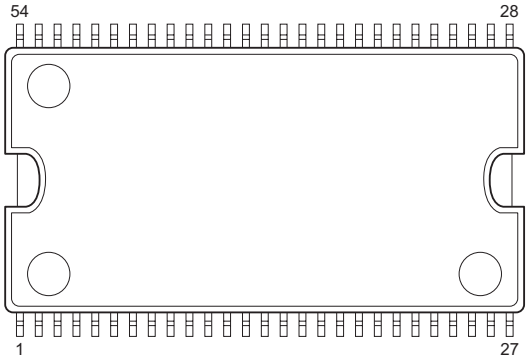


**BD7956FS Block diagram**

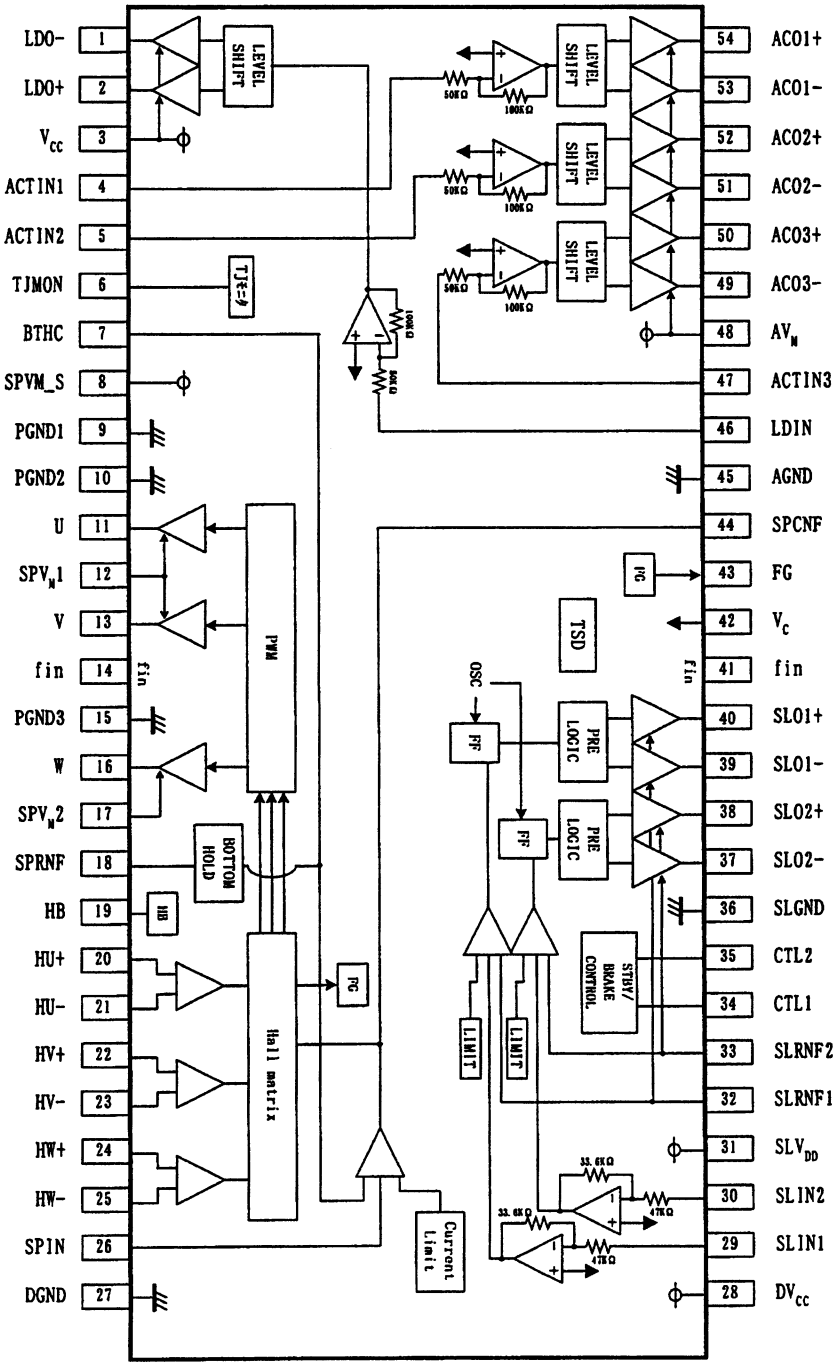

**BD7956FS Terminal Function**

| Pin No. | Symbol | Description |
|---|---|---|
| 1 | LDO- | Loading driver negative output |
| 2 | LDO+ | Loading driver positive output |
| 3 | $V_{CC}$ | BTL block pre-loading power supply |
| 4 | ACTIN1 | Actuator driver 1 input |
| 5 | ACTIN2 | Actuator driver 2 input |
| 6 | TJMON | Chip temperature monitor terminal |
| 7 | BTHC | Connection with capacitor for bottom hold |
| 8 | SPVM_S | Spindle driver power supply |
| 9 | PGND1 | Spindle driver power ground 1 |
| 10 | PGND2 | Spindle driver power ground 2 |
| 11 | U | Spindle driver output U |
| 12 | $SPV_M1$ | Spindle driver power supply 1 |
| 13 | V | Spindle driver output V |
| 14 | fin | fin |
| 15 | PGND3 | Spindle driver power ground 3 |
| 16 | W | Spindle driver output W |
| 17 | $SPV_M2$ | Spindle driver power supply 2 |
| 18 | SPRNF | Spindle driver current sense |
| 19 | HB | Hall bias |
| 20 | HU+ | Hall amp.U positive input |
| 21 | HU- | Hall amp.U negative input |
| 22 | HV+ | Hall amp.V positive input |
| 23 | HV- | Hall amp.V negative input |
| 24 | HW+ | Hall amp.W positive input |
| 25 | HW- | Hall amp.W negative input |
| 26 | SPIN | Spindle driver control input |
| 27 | DGND | PWM block pre-ground |
| 28 | $DV_{CC}$ | PWM block control power supply |
| 29 | SLIN1 | Sled driver 1 input |
| 30 | SLIN2 | Sled driver 2 input |
| 31 | $SLV_{DD}$ | Sled driver MOS pre power supply |
| 32 | SLRNF1 | Sled driver 1 current sense |
| 33 | SLRNF2 | Sled driver 2 current sense |
| 34 | CTL1 | Driver logic control input 1 |
| 35 | CTL2 | Driver logic control input 2 |
| 36 | SLGND | Sled driver power ground |
| 37 | SLO2- | Sled driver 2 negative output |
| 38 | SLO2+ | Sled driver 2 positive output |
| 39 | SLO1- | Sled driver 1 negative output |
| 40 | SLO1+ | Sled driver 1 positive output |
| 41 | fin | fin |
| 42 | $V_C$ | Reference voltage input |
| 43 | FG | Frequency generator output |
| 44 | SPCNF | Spindle driver filter terminal |
| 45 | AGND | BTL block power ground |
| 46 | LDIN | Loading driver input |
| 47 | ACTIN3 | Actuator driver 3 input |
| 48 | $AV_M$ | Actuator driver power supply |
| 49 | ACO3- | Actuator driver 3 positive output |
| 50 | ACO3+ | Actuator driver 3 negative output |
| 51 | ACO2- | Actuator driver 2 positive output |
| 52 | ACO2+ | Actuator driver 2 negative output |
| 53 | ACO1- | Actuator driver 1 positive output |
| 54 | ACO1+ | Actuator driver 1 negative output |

## PT6302 (PD: IC101)

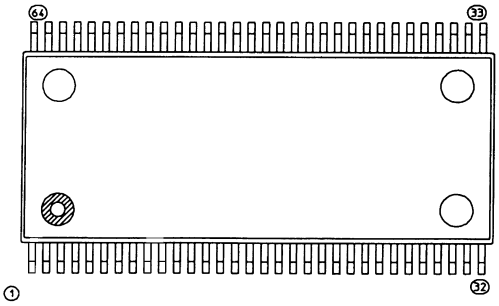


## PT6302 Block diagram

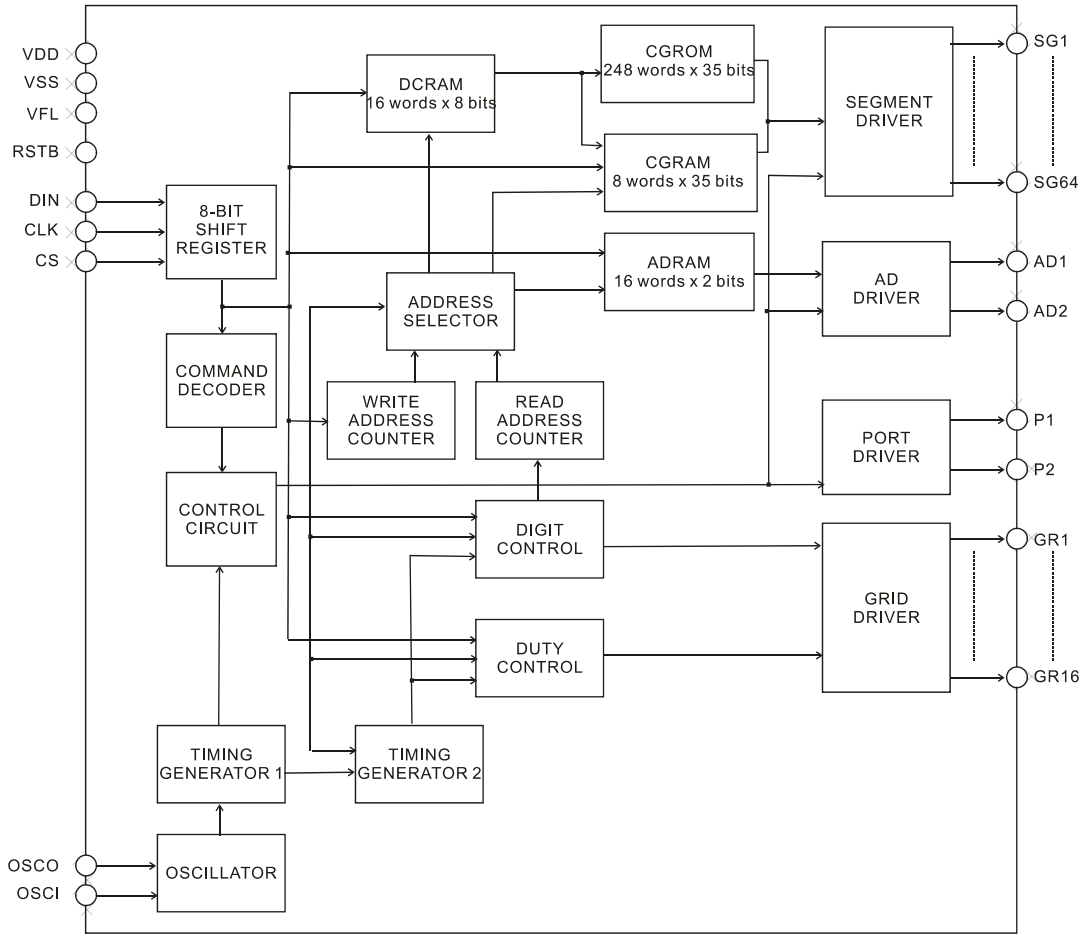


## PT6302 Terminal Function

| Pin No. | Pin Name | I/O | Description |
|---|---|---|---|
| 9 ~ 39, 8 ~ 5 | SG5 to SG35, SG4 to SG1 | O | Segment Driver Output Pin |
| 40 ~ 55 | GR1 to GR16 | O | Grid Driver Output Pin |
| 56 | VEE | - | Power Supply |
| 57 | VSS | - | Ground Pin |
| 58 | OSCI | I | Oscillator Input Pin |
| 59 | OSCO | O | Oscillator Output Pin |
| 60 | RSTB | I | Reset Input Pin : When this pin is set to "LOW", all functions are initialized. |
| 61 | CSB | I | Chip Select Input Pin : When this pin is set to "High" Level, the serial data transfer is disabled. |
| 62 | CLKB | I | Shift Clock Input Pin : The serial data is shifted at the rising edge of CLKB. |
| 63 | DIN | I | Serial Data Input Pin |
| 64 | VDD | - | Positive Power Supply |
| 1 ~ 2 | P1 to P2 | O | General Purpose Output Pin |
| 3 ~ 4 | AD2 to AD1 | O | Segment Driver Output Pin |

## EM6A9320BI-4MG (DI: IC701-704)

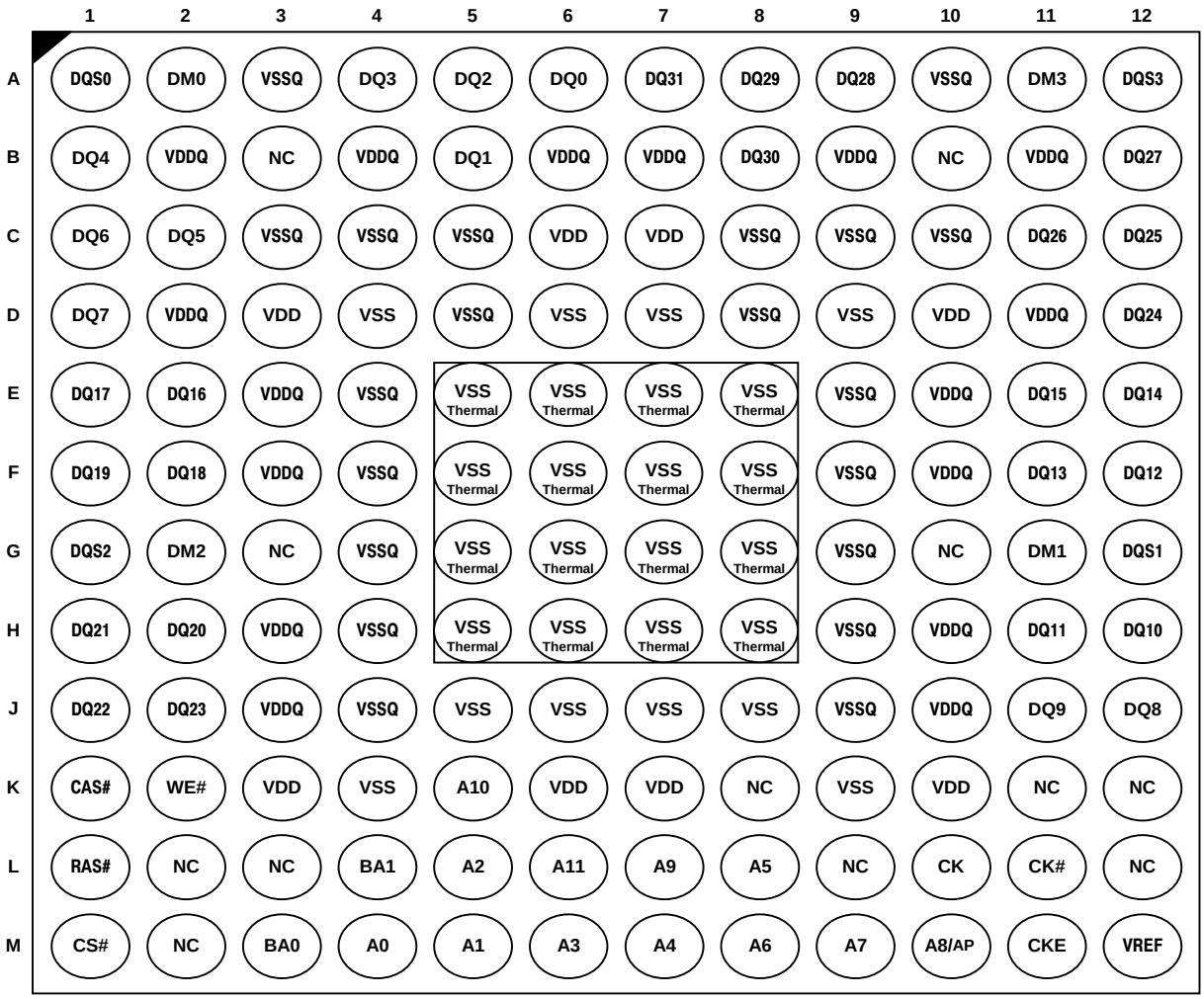


## EM6A9320BI-4MG Terminal Function

| Symbol | Description |
|---|---|
| CK, CK# | Differential Clock |
| CKE | Clock Enable |
| BA0, BA1 | Bank Select |
| A0 -A11 | Address Input |
| CS# | Chip Select |
| RAS# | Row Address Strobe |
| CAS# | Column Address Strobe |
| WE# | Write Enable |
| DQS0-DQS3 | Bidirectional Data Strobe |
| DM0-DM3 | Data input Mask |
| DQ0-DQ31 | Data I/O |
| $V_{DD}$ | Power Supply |
| $V_{SS}$ | Ground |
| $V_{DDQ}$ | DQ Power |
| $V_{SSQ}$ | DQ Ground |
| $V_{REF}$ | Reference Voltage for Inputs |
| NC | No Connect |

## EM638165TS (MA: IC156, IC158)

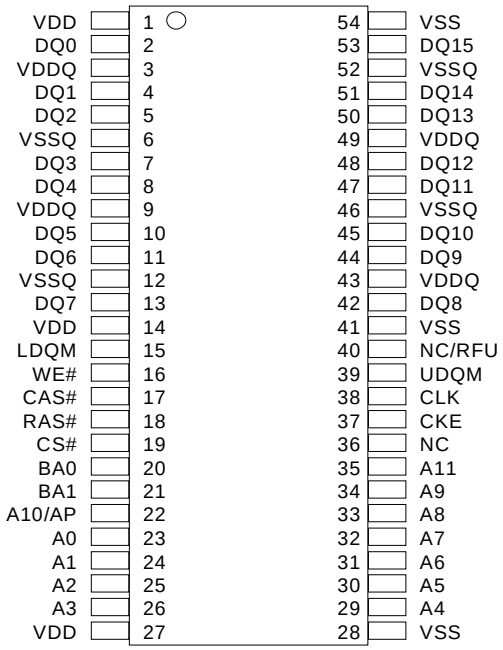


### EM638165TS Terminal Function

| Symbol | Type | Description |
|---|---|---|
| CLE | Input | Clock |
| CKE | Input | Clock Enable |
| BA0,BA1 | Input | Bank Select |
| A0-A11 | Input | Address Inputs |
| CS# | Input | Chip Select |
| RAS# | Input | Row Address Strobe |
| CAS# | Input | Column Address Strobe |
| WE# | Input | Write Enable |
| LDQM, UDQM | Input | Data Input/Output Mask |
| DQ0-DQ15 | Input/Output | Data I/O |
| NC/RFU | - | No Connect |
| $V_{DDQ}$ | Supply | DQ Power |
| $V_{SSQ}$ | Supply | DQ Ground |
| $V_{DD}$ | Supply | Power Supply |
| $V_{SS}$ | Supply | Ground |

## LP2995M (DI: IC803)

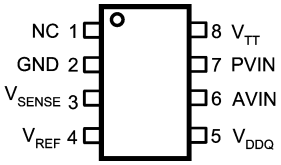


### LP2995M Terminal Function

| Pin No. | Name | Function |
|---|---|---|
| 1 | NC | No internal connection. Can be used for vias |
| 2 | GND | Ground |
| 3 | VSENSE | Feedback pin for regulating VTT |
| 4 | VREF | Buffered internal reference voltage of VDDQ/2 |
| 5 | VDDQ | Input for internal reference equal to VDDQ/2 |
| 6 | AVIN | Analog input pin |
| 7 | PVIN | Power input pin |
| 8 | VTT | Output voltage for connection to termination resistors |

## MX29LV640BBTC-90 (DI: IC802)

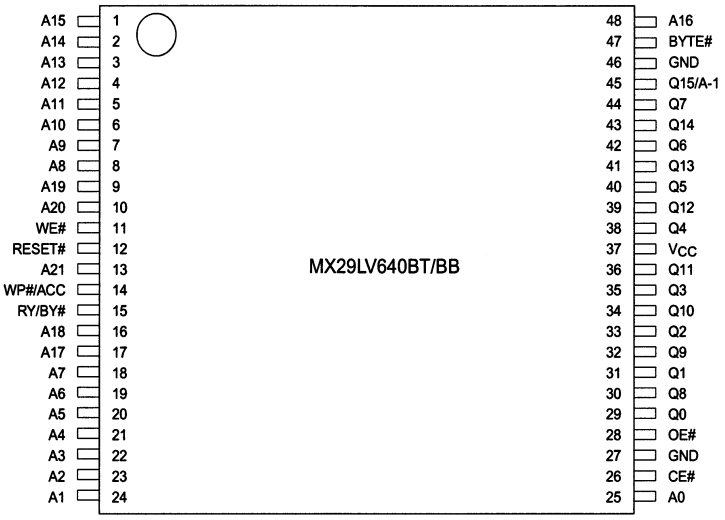


### MX29LV640BBTC-90 Terminal Function

| Symbol | Pin Name |
|---|---|
| A0~A21 | Address Input |
| Q0~Q14 | Data Inputs/Outputs |
| Q15/A-1 | Q15(Word mode)/LSB address (Byte mode) |
| CE# | Chip Enable Input |
| WE# | Write Enable Input |
| OE# | Output Enable Input |
| RESET# | Hardware Reset Pin, Active Low |
| WP#/ACC | Hardware Write Protect/Programming Acceleration Input |
| RY/BY# | Read/Busy Output |
| BYTE# | Selects 8 bit or 16 bit mode |
| VCC | +3.0V single power supply |
| GND | Device Ground |
| NC | Pin Not Connected Internally |

## MX29LV320CBTC-70G (MA: IC155)

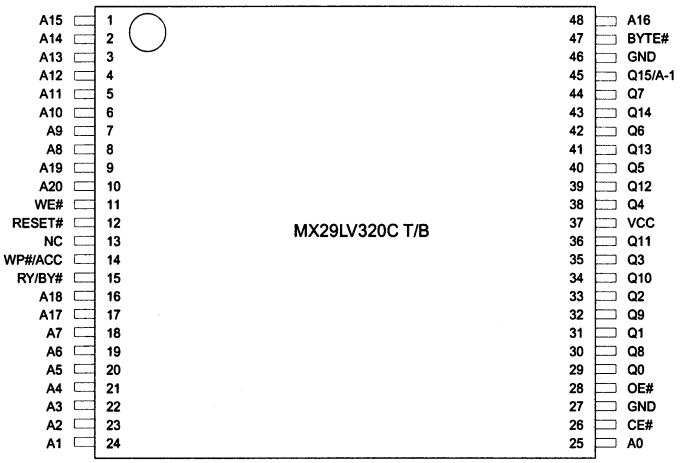


### MX29LV320CBTC-70G Terminal Function

| Symbol | Pin Name |
|---|---|
| A0~A20 | Address Input |
| Q0~Q14 | 15 Data Inputs/Outputs |
| Q15/A-1 | Q15(Data Input/Output, word mode)<br>A-1(LSB Address Input, byte mode) |
| CE# | Chip Enable Input |
| WE# | Write Enable Input |
| OE# | Output Enable Input |
| BYTE# | Word/Byte Selection Input |
| RESET# | Hardware Reset Pin, Active Low |
| RY/BY# | Read/Busy Output |
| VCC | 3.0 volt-only single power supply |
| WP#/ACC | Hardware Write Protect/Acceleration Pin |
| GND | Device Ground |
| NC | Pin Not Connected Internally |

## SN74LV594APWR (MA: IC502)

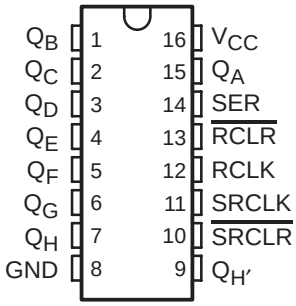


## TA76432S (PD: IC902, 907, 908)

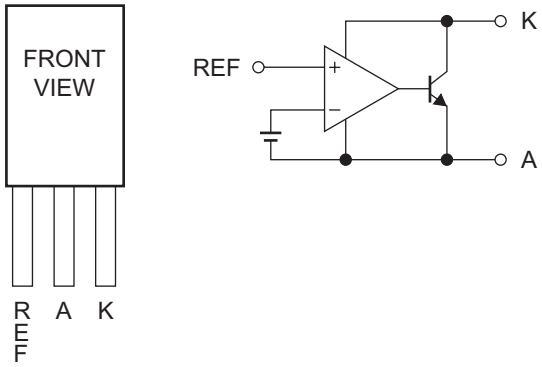

## CXD2753R (MA: IC401)

### Pin Assignment

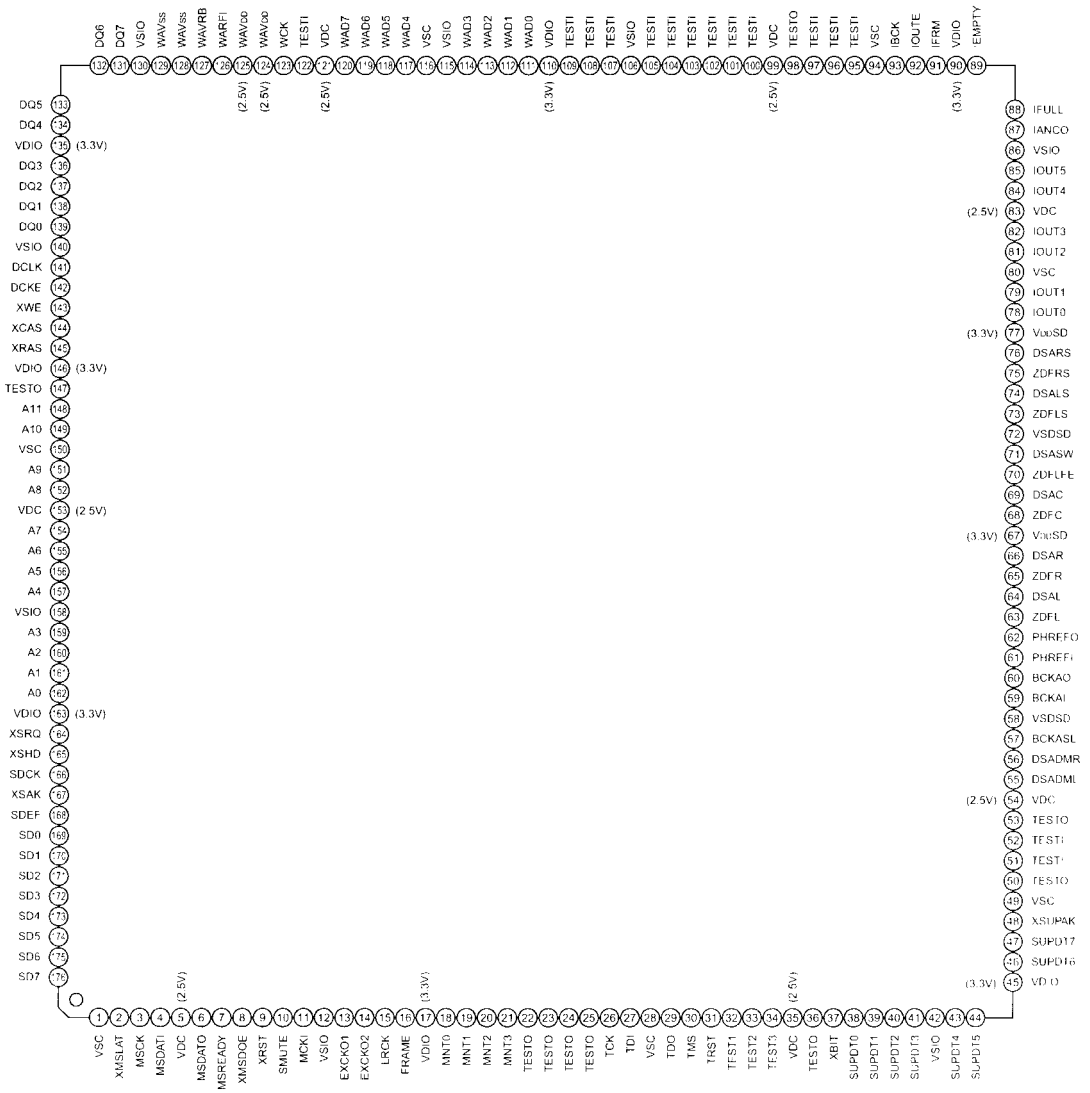


### Block Diagram

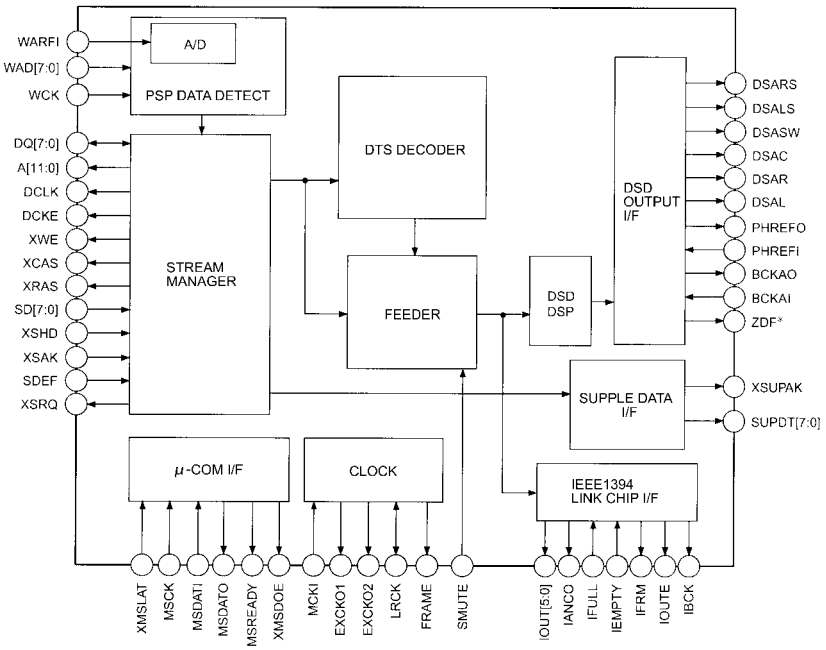

**Terminal Functions**

| | Pin Name | I/O | Functions |
|---|---|---|---|
| 1 | VSC | - | It fixed to ground.( for Core) |
| 2 | XMSLAT | I | Latch input for μCOM serial communication. |
| 3 | MSCK | I | Shift clock input for μCOM serial communication. |
| 4 | MSDATI | I | Data input for μCOM serial communication. |
| 5 | VDC | - | +2.5V Power for Core. |
| 6 | MSDATO | O | Data output for μCOM serial communication. “Hi-Z” potential except the output mode. |
| 7 | MSREADY | O | Completion flag of output preparation for μCOM serial communication. “L” is outputted at the time of completion. |
| 8 | XMSDOE | O | Output enable pin for μCOM serial communication. “L” is outputted at the time of MSDATO mode. |
| 9 | XRST | I | Reset pin. The whole IC is reset by at the time of “L” potential. |
| 10 | SMUTE | Ipd | Soft Mute. Soft mute of the audio output is carried out at the time of “H” potential. It releases at the time of “L” potential. |
| 11 | MCKI | I | Master Clock input. |
| 12 | VSIO | - | It fixed to Ground. Ground for I/O. |
| 13 | EXCKO1 | O | External output Clock 1. |
| 14 | EXCKO2 | O | External output Clock 2. |
| 15 | LRCK | O | 44.1kHz, 1Fs Clock output. |
| 16 | FRAME | O | Frame signal output. |
| 17 | VDIO | - | +3.3V Power for I/O. |
| 18 | MNT0 | O | Monitor output. |
| 19 | MNT1 | O | Monitor output. |
| 20 | MNT2 | O | Monitor output. |
| 21 | MNT3 | O | Monitor output. |
| 22 | TESTO | O | Output terminal for a Test. (open) |
| 23 | TESTO | O | Output terminal for a Test.(open) |
| 24 | TESTO | O | Output terminal for a Test.(open) |
| 25 | TESTO | O | Output terminal for a Test.(open) |
| 26 | TCK | I | Clock input for a Test. It fixed to “L” potential. |
| 27 | TDI | Ipu | Input pin(pull-up) for a Test.(open) |
| 28 | VSC | - | It fixed to Ground. Ground for CORE. |
| 29 | TDO | O | Output for a Test.(open). |
| 30 | TMS | Ipu | Input pin(pull-up) for a Test.(open) |
| 31 | TRST | Ipu | Reset pin(pull-up) for a Test. Input the Power-on reset signal or fixed to “L” potential. |
| 32 | TEST1 | I | Test input pin. It fixed to “L” potential. |
| 33 | TEST2 | I | Test input pin. It fixed to “L” potential. |
| 34 | TEST3 | I | Test input pin. It fixed to “L” potential. |
| 35 | VDC | - | +2.5V Power for CORE. |
| 36 | TESTO | O | Out put for TEST. It fixed to open. |
| 37 | XBIT | O | DST monitor. |
| 38 | SUPDT0 | O | Supplementary data output. (LSB) |
| 39 | SUPDT1 | O | Supplementary data output. |
| 40 | SUPDT2 | O | Supplementary data output. |
| 41 | SUPDT3 | O | Supplementary data output. |
| 42 | VSIO | - | Ground for I/O. |
| 43 | SUPDT4 | O | Supplementary data output. |
| 44 | SUPDT5 | O | Supplementary data output. |
| 45 | VDIO | - | +3.3V Power for I/O. |
| 46 | SUPDT6 | O | Supplementary data output. |
| 47 | SUPDT7 | O | Supplementary data output. (MSB) |
| 48 | XSUPAK | O | Supplementary data Acknowledge output terminal. |
| 49 | VSC | - | Ground for CORE. |

| | Pin Name | I/O | Functions |
|---|---|---|---|
| 50 | TESTO | O | Output for TEST. (open) |
| 51 | TESTI | I | Input for TEST. It fixed to “L” potential. |
| 52 | TESTI | I | Input for TEST. It fixed to “L” potential. |
| 53 | TESTO | O | Output for TEST. (open) |
| 54 | VDC | - | +2.5V Power for CORE. |
| 55 | DSADML | O | DSD Data output terminal for Lch Down Mix. |
| 56 | DSADMR | O | DSD Data output terminal for Rch Down Mix. |
| 57 | BCKASL | I | I/O selection terminal of the Bit clock for DSD data output. L=input (Slave), H=output (Master) |
| 58 | VSDSD | - | Ground terminal for DSD data output. |
| 59 | BCKAI | I | Bit clock input terminal for DSD data output.<br>Input a Bit clock into this terminal at the time of BCKASL=”L” potential. |
| 60 | BCKAO | O | Bit clock output terminal for DSD data output.<br>Bit clock output from this terminal at the time of BCKASL=”H” potential. |
| 61 | PHREFI | I | Reference phase signal input terminal for DSD output phase modulation. |
| 62 | PHREFO | O | Reference phase signal output terminal for DSD output phase modulation. |
| 63 | ZDFL | O | Lch zero-data detection flag (at the time of µcom setup).<br>It will be set to “H” if non-sound data continues 300 msecs. |
| 64 | DSAL | O | DSD data output terminal for Lch speaker. |
| 65 | ZDFR | O | Rch zero-data detection flag (at the time of µcom setup).<br>It will be set to “H” if non-sound data continues 300 msecs. |
| 66 | DSAR | O | DSD data output terminal for Rch speaker. |
| 67 | VDDSD | - | +3.3V Power for DSD data output. |
| 68 | ZDFC | O | Cch zero-data detection flag (at the time of µcom setup).<br>It will be set to “H” if non-sound data continues 300 msecs. |
| 69 | DSAC | O | DSD data output terminal for Cch speaker. |
| 70 | ZDFLFE | O | LFEch zero-data detection flag (at the time of µcom setup).<br>It will be set to “H” if non-sound data continues 300 msecs. |
| 71 | DSASW | O | DSD data output terminal for SWch speaker. |
| 72 | VSDSD | - | Ground for DSD data output. |
| 73 | ZDFLS | O | LSch zero-data detection flag (at the time of µcom setup).<br>It will be set to “H” if non-sound data continues 300 msecs. |
| 74 | DSALS | O | DSD data output terminal for LSch speaker. |
| 75 | ZDFRS | O | RSch zero-data detection flag (at the time of µcom setup).<br>It will be set to “H” if non-sound data continues 300 msecs. |
| 76 | DSARS | O | DSD data output terminal for RSch speaker. |
| 77 | VDDSD | O | +3.3V Power for DSD data output. |
| 78 | IOUT0 | O | Data output terminal 0 for IEEE1394 link chip I/F. |
| 79 | IOUT1 | O | Data output terminal 1 for IEEE1394 link chip I/F. |
| 80 | VSC | - | Ground for CORE. |
| 81 | IOUT2 | O | Data output terminal 2 for IEEE1394 link chip I/F. |
| 82 | IOUT3 | O | Data output terminal 3 for IEEE1394 link chip I/F. |
| 83 | VDC | - | +2.5V Power for CORE. |
| 84 | IOUT4 | O | Data output terminal 4 for IEEE1394 link chip I/F. |
| 85 | IOUT5 | O | Data output terminal 5 for IEEE1394 link chip I/F. |
| 86 | VSIO | - | Ground for I/O. |
| 87 | IANCO | O | Transmission information data output terminal for IEEE1394 link chip I/F. |
| 88 | IFULL | I | Data transmission hold request signal input terminal for IEEE1394 link chip I/F. |
| 89 | IEMPTY | I | High speed transmission request signal input terminal for IEEE1394 link chip I/F. |
| 90 | VDIO | - | +3.3V Power for I/O. |
| 91 | IFRM | O | Frame reference signal output terminal for IEEE1394 link chip I/F. |
| 92 | IOUTE | O | Enable signal output terminal for IEEE1394 link chip I/F. |
| 93 | IBCK | O | Data transmission clock output terminal for IEEE1394 link chip I/F. |
| 94 | VSC | - | Ground for CORE. |
| 95 | TESTI | I | TEST input terminal. It fixed to “H” potential. |

| | Pin Name | I/O | Functions |
|---|---|---|---|
| 96 | TESTI | I | TEST input terminal. It fixed to “L” potential. |
| 97 | TESTI | Ipu | TEST input terminal. It fixed to “H” potential. |
| 98 | TESTO | O | TEST output terminal. (open) |
| 99 | VDC | - | +2.5V Power for CORE. |
| 100 | TESTI | I | TEST input terminal. It fixed to “L” potential. |
| 101 | TESTI | I | TEST input terminal. It fixed to “L” potential. |
| 102 | TESTI | I | TEST input terminal. It fixed to “L” potential. |
| 103 | TESTI | I | TEST input terminal. It fixed to “L” potential. |
| 104 | TESTI | I | TEST input terminal. It fixed to “L” potential. |
| 105 | TESTI | I | TEST input terminal. It fixed to “L” potential. |
| 106 | VSIO | - | Ground for I/O. |
| 107 | TESTI | I | TEST input terminal. It fixed to “L” potential. |
| 108 | TESTI | I | TEST input terminal. It fixed to “L” potential. |
| 109 | TESTI | I | TEST input terminal. It fixed to “L” potential. |
| 110 | VDIO | - | +3.3V Power for I/O. |
| 111 | WAD0 | I | External A/D data input terminal(LSB) for PSP physical disc mark detection. |
| 112 | WAD1 | I | External A/D data input terminal for PSP physical disc mark detection. |
| 113 | WAD2 | I | External A/D data input terminal for PSP physical disc mark detection. |
| 114 | WAD3 | I | External A/D data input terminal for PSP physical disc mark detection. |
| 115 | VSIO | - | Ground for I/O. |
| 116 | VSC | - | Ground for CORE. |
| 117 | WAD4 | I | External A/D data input terminal for PSP physical disc mark detection. |
| 118 | WAD5 | I | External A/D data input terminal for PSP physical disc mark detection. |
| 119 | WAD6 | I | External A/D data input terminal for PSP physical disc mark detection. |
| 120 | WAD7 | I | External A/D data input terminal(MSB) for PSP physical disc mark detection. |
| 121 | VDC | - | +2.5V Powe for CORE. |
| 122 | TESTI | I | TEST input terminal. It fixed to “L” potential. |
| 123 | WCK | I | Operation clock for PSP physical disc mark detection. |
| 124 | $WAV_{DD}$ | - | +2.5V Power. A/D Power supply for PSP physical disc mark detection. |
| 125 | $WAV_{DD}$ | - | +2.5V Power. A/D Power supply for PSP physical disc mark detection. |
| 126 | WARFI | Ai | Analog RF signal input terminal for PSP physical disc mark detection. |
| 127 | WAVRB | Ai | A/D bottom reference terminal for PSP physical disc mark detection. |
| 128 | $WAV_{SS}$ | - | A/D Ground terminal for PSP physical disc mark detection. |
| 129 | $WAV_{SS}$ | - | A/D Ground terminal for PSP physical disc mark detection. |
| 130 | VSIO | - | Ground for I/O. |
| 131 | DQ7 | I/O | SDRAM data input/output terminal. (MSB) |
| 132 | DQ6 | I/O | SDRAM data input/output terminal. |
| 133 | DQ5 | I/O | SDRAM data input/output terminal. |
| 134 | DQ4 | I/O | SDRAM data input/output terminal. |
| 135 | VDIO | - | +3.3V Power for I/O. |
| 136 | DQ3 | I/O | SDRAM data input/output terminal. |
| 137 | DQ2 | I/O | SDRAM data input/output terminal. |
| 138 | DQ1 | I/O | SDRAM data input/output terminal. |
| 139 | DQ0 | I/O | SDRAM data input/output terminal. (LSB) |
| 140 | VSIO | - | Ground for I/O. |
| 141 | DCLK | O | Clock output terminal for SDRAM. |
| 142 | DCKE | O | Clock enable output terminal for SDRAM. |
| 143 | XWE | O | Write enable output terminal for SDRAM. |
| 144 | XCAS | O | Colomn address strobe output terminal for SDRAM. |
| 145 | XRAS | O | Row address strobe output terminal for SDRAM. |
| 146 | VDIO | - | +3.3V Power for I/O. |
| 147 | TESTO | O | Output terminal for TEST. (open) |

| | Pin Name | I/O | Functions |
|---|---|---|---|
| 148 | A11 | O | Address output terminal for SDRAM. (MSB) |
| 149 | A10 | O | Address output terminal for SDRAM. |
| 150 | VSC | - | Ground for CORE. |
| 151 | A9 | O | Address output terminal for SDRAM. |
| 152 | A8 | O | Address output terminal for SDRAM. |
| 153 | VDC | - | +2.5V Power for CORE. |
| 154 | A7 | O | Address output terminal for SDRAM. |
| 155 | A6 | O | Address output terminal for SDRAM. |
| 156 | A5 | O | Address output terminal for SDRAM. |
| 157 | A4 | O | Address output terminal for SDRAM. |
| 158 | VSIO | - | Ground for I/O. |
| 159 | A3 | O | Address output terminal for SDRAM. |
| 160 | A2 | O | Address output terminal for SDRAM. |
| 161 | A1 | O | Address output terminal for SDRAM. |
| 162 | A0 | O | Address output terminal for SDRAM. (LSB) |
| 163 | VDIO | - | +3.3V Power for I/O. |
| 164 | XSRQ | O | Output terminal of the Data Request signal inputted a front-end processor. |
| 165 | XSHD | I | Input terminal of the header Flag outputted from a front-end processor. |
| 166 | SDCK | I | Input terminal of the data conveyance Clock outputted from a front-end processor. |
| 167 | XASK | I | Input terminal of the data valid Flag outputted from a front-end processor. |
| 168 | SDEF | I | Input terminal of the error Flag outputted from a front-end processor. |
| 169 | SD0 | I | Input terminal of the stream Data outputted from a front-end processor. |
| 170 | SD1 | I | Input terminal of the stream Data outputted from a front-end processor. |
| 171 | SD2 | I | Input terminal of the stream Data outputted from a front-end processor. |
| 172 | SD3 | I | Input terminal of the stream Data outputted from a front-end processor. |
| 173 | SD4 | I | Input terminal of the stream Data outputted from a front-end processor. |
| 174 | SD5 | I | Input terminal of the stream Data outputted from a front-end processor. |
| 175 | SD6 | I | Input terminal of the stream Data outputted from a front-end processor. |
| 176 | SD7 | I | Input terminal of the stream Data outputted from a front-end processor. |

Ipu: Pull-up input  Ipd: Pull-down input  Ai: Analog input

## PCM1796DBR (AU: IC401, 406, 411, 702, 707)

(TOP VIEW)

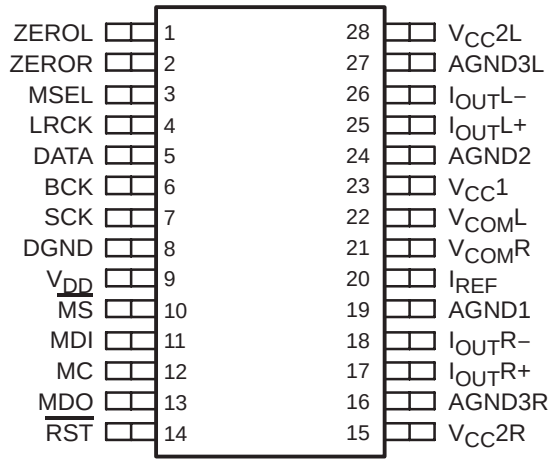


## PCM1796DBR Block Diagram

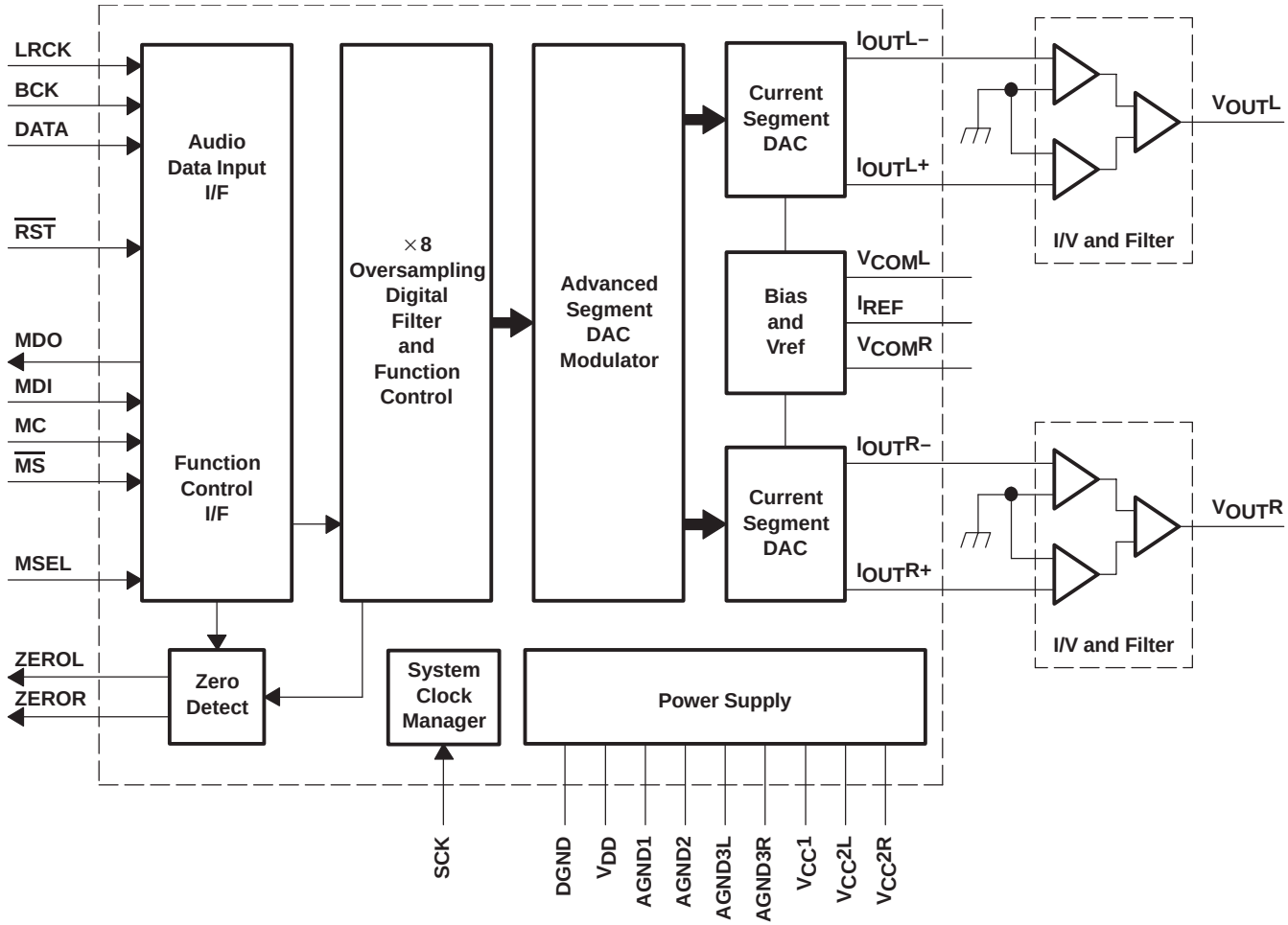

## PCM1796DBR Terminal Function

| TERMINAL NAME | TERMINAL PIN | I/O | DESCRIPTIONS |
|---|---|---|---|
| AGND1 | 19 | – | Analog ground (internal bias) |
| AGND2 | 24 | – | Analog ground (internal bias) |
| AGND3L | 27 | – | Analog ground (L-channel DACFF) |
| AGND3R | 16 | – | Analog ground (R-channel DACFF) |
| BCK | 6 | I | Bit clock input(1) |
| DATA | 5 | I | Serial audio data input(1) |
| DGND | 8 | – | Digital ground |
| $I_{OUT}L+$ | 25 | O | L-channel analog current output+ |
| $I_{OUT}L-$ | 26 | O | L-channel analog current output– |
| $I_{OUT}R+$ | 17 | O | R-channel analog current output+ |
| $I_{OUT}R-$ | 18 | O | R-channel analog current output– |
| $I_{REF}$ | 20 | – | Output current reference bias pin |
| LRCK | 4 | I | Left and right clock ($f_S$) input(1) |
| MC | 12 | I | Mode control clock input(1) |
| MDI | 11 | I | Mode control data input(1) |
| MDO | 13 | I/O | Mode control readback data output(3) |
| $\overline{MS}$ | 10 | I/O | Mode control chip-select input(2) |
| MSEL | 3 | I | $I^2C/\overline{SPI}$ select(1) |
| $\overline{RST}$ | 14 | I | Reset(1) |
| SCK | 7 | I | System clock input(1) |
| $V_{CC}1$ | 23 | – | Analog power supply, 5 V |
| $V_{CC}2L$ | 28 | – | Analog power supply (L-channel DACFF), 5 V |
| $V_{CC}2R$ | 15 | – | Analog power supply (R-channel DACFF), 5 V |
| $V_{COM}L$ | 22 | – | L-channel internal bias decoupling pin |
| $V_{COM}R$ | 21 | – | R-channel internal bias decoupling pin |
| $V_{DD}$ | 9 | – | Digital power supply, 3.3 V |
| ZEROL | 1 | I/O | Zero flag for L-channel(2) |
| ZEROR | 2 | I/O | Zero flag for R-channel(2) |

(1) Schmitt-trigger input, 5-V tolerant
(2) Schmitt-trigger input and output. 5-V tolerant input and CMOS output
(3) Schmitt-trigger input and output. 5-V tolerant input. In $I^2C$ mode, this pin becomes an open-drain 3-state output; otherwise, this pin is a CMOS output.

## SM8707EV (MA: IC154)

**Top View**

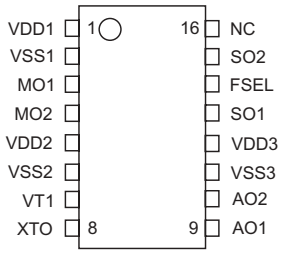


**Block Diagram**

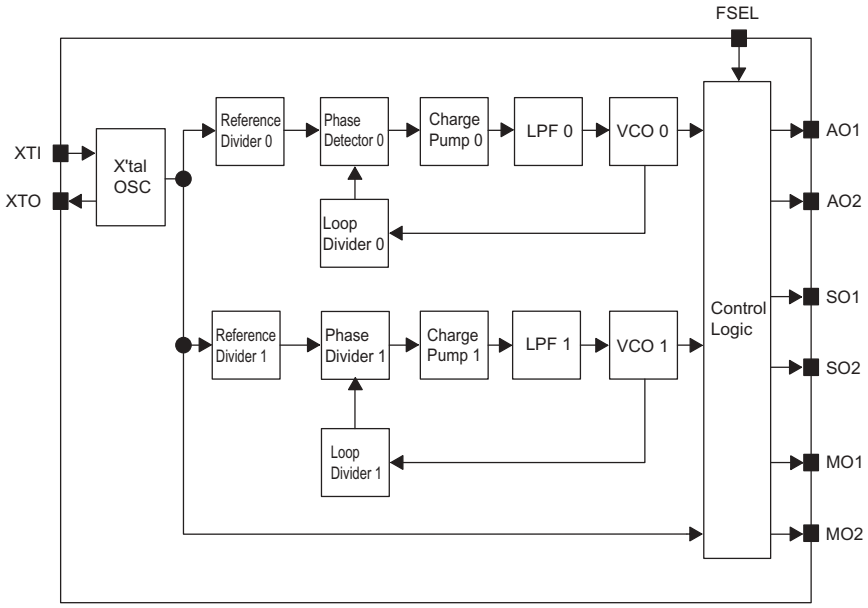


**Functions**

| Number | Name | I/O | Description |
|---|---|---|---|
| 1 | VDD1 | - | Supply 1 for digital block |
| 2 | VSS1 | - | Ground 1 for digital block |
| 3 | MO1 | O | Video system output 1 (27MHz fixed) |
| 4 | MO2 | O | Video system output 2 (27MHz fixed) |
| 5 | VDD2 | - | Supply 2 for analog block |
| 6 | VSS2 | - | Ground 2 for analog block |
| 7 | XTI | I | Crystal oscillator connection or external clock input |
| 8 | XTO | O | Crystal oscillator connection |
| 9 | AO1 | O | <SM8707D> Audio system output 1 (384fs/768fs output)<br>FSEL = LOW, fs = 48kHz: 768fs<br>FSEL = HIGH, fs = 44.1kHz: 384fs<br><SM8707E> Audio system output 1 (512fs output) |
| 10 | AO2 | O | Audio system output 1 (512fs output) |
| 11 | VSS3 | - | Ground 3 for digital block |
| 12 | VDD3 | - | Supply 1 for digital block |
| 13 | SO1 | O | <SM8707D> Signal processor system output 1 (16.9344MHz fixed)<br><SM8707E> Signal processor system output 1 (33.8688MHz fixed) |
| 14 | FSEL | I | <SM8707D> Sampling frequency select<br>FSEL = LOW : fs = 48kHz<br>FSEL = HIGH : fs = 44.1kHz<br>(with internal pull-up resistor, Schmitt-trigger input)<br><SM8707E> Sampling frequency select<br>FSEL = LOW : fs = 48kHz<br>FSEL = HIGH : fs = 44.1kHz<br>(with internal pull-up resistor, Schmitt-trigger input) |
| 15 | SO2 | O | Signal processor system output 2 (33.8688MHz fixed) |
| 16 | NC | - | No connection (leave pin open circuit or connect to VDD) |

## LC89057W (AU: IC107)

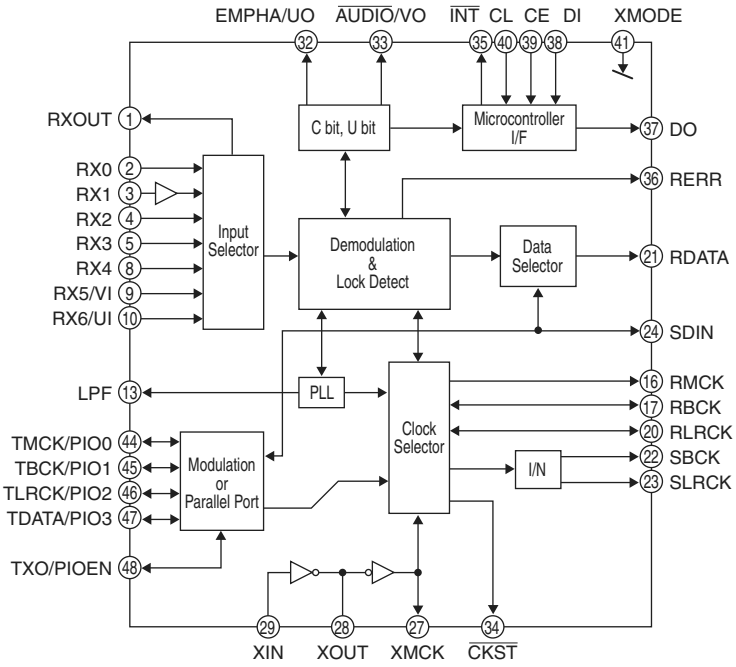


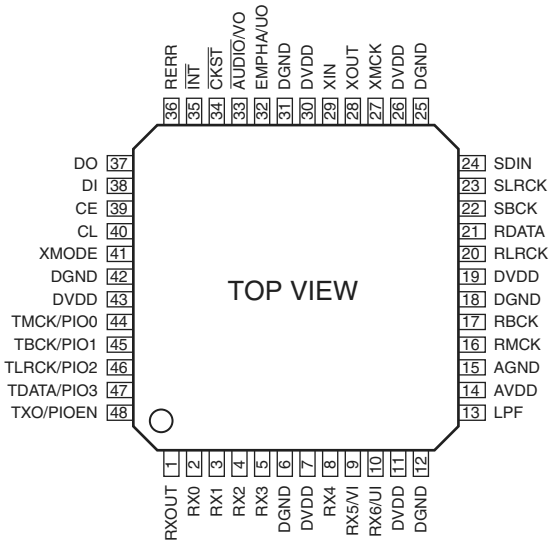


### LC89057W Terminal Function

| Pin No. | Pin Name | I/O | Function |
|---|---|---|---|
| 1 | RXOUT | O | Input bi-phase select data output terminal |
| 2 | RX0 | I | TTL compatible digital data input terminal |
| 3 | RX1 | I | Coaxial compatible amp built-in digital data input terminal |
| 4 | RX2 | I | TTL compatible digital data input terminal |
| 5 | RX3 | I | TTL compatible digital data input terminal |
| 6 | DGND | — | Digital GND |
| 7 | DVDD | — | Digital power |
| 8 | RX4 | I | TTL compatible digital data input terminal |
| 9 | RX5/VI | I | TTL compatible digital data/Validity flag input terminal for modulation |
| 10 | RX6/UI | I | TTL compatible digital data/User data input terminal for modulation |
| 11 | DVDD | — | Digital power for PLL |
| 12 | DGND | — | Digital GND for PLL |
| 13 | LPF | O | PLL loop filter connecting terminal |
| 14 | AVDD | — | Analog power for PLL |
| 15 | AGND | — | Analog GND for PLL |
| 16 | RMCK | O | RMCK clock output terminal (256fs, 512fs, XIN, VCO) |
| 17 | RBCK | O/I | RBCK clock in/output terminal (64fs) |
| 18 | DGND | — | Digital GND |
| 19 | DVDD | — | Digital power |
| 20 | RLRCK | O/I | RLRCK clock in/output terminal (fs) |
| 21 | RDATA | O | Serial audio data output terminal |
| 22 | SBCK | O | SBCK clock output terminal (32fs, 64fs, 128fs) |
| 23 | SLRCK | O | SLRCK clock output terminal (fs/2, fs, 2fs) |
| 24 | SDIN | I | Serial audio data input terminal |
| 25 | DGND | — | Digital GND |
| 26 | DVDD | — | Digital power |
| 27 | XMCK | O | Osc. amp output terminal |

| Pin No. | Pin Name | I/O | Function |
|---|---|---|---|
| 28 | XOUT | O | X'tal osc. connecting output terminal |
| 29 | XIN | I | X'tal osc. connection, external clock input terminal (24.576MHz or 12.288MHz) |
| 30 | DVDD | — | Digital power |
| 31 | DGND | — | Digital GND |
| 32 | EMPHA/UO | I/O | Emphasis information/U-data output/Chip address setting terminal |
| 33 | AUDIO/VO | I/O | Non-PCM detect/V-flag output/ Chip address setting terminal |
| 34 | CKST | I/O | Clock switch transition period output/Demodulation master or slave function switching terminal |
| 35 | INT | I/O | Interrupt output for µcom (Interrupt factor selectable)/Modulation or general I/O switching terminal |
| 36 | RERR | O | PLL lock error, data error flag output |
| 37 | DO | O | µcom I/F, read out data output terminal (3-state) |
| 38 | DI | I | µcom I/F, write data input terminal |
| 39 | CE | I | µcom I/F, chip enable input terminal |
| 40 | CL | I | µcom I/F, clock input terminal |
| 41 | XMODE | I | System reset input terminal |
| 42 | DGND | — | Digital GND |
| 43 | DVDD | — | Digital power |
| 44 | TMCK/PIO0 | I/O | 256fs system clock input for modulation/General I/O in/output terminal |
| 45 | TBCK/PIO1 | I/O | 64fs bit clock input for modulation/General I/O in/output terminal |
| 46 | TLRCK/PIO2 | I/O | fs clock input for modulation/General I/O in/output terminal |
| 47 | TDATA/PIO3 | I/O | Serial audio data input for modulation/General I/O in/output terminal |
| 48 | TXO/PIOEN | O/I | Modulation data output/ General I/O enable input terminal |

* For latch-up countermeasure, perform each power supply ON/OFF in the same timing.

**BH7868FS (MA: IC505)**
**(MA: IC506 :JP model only)**
**(MA: IC551 :E2 model only)**

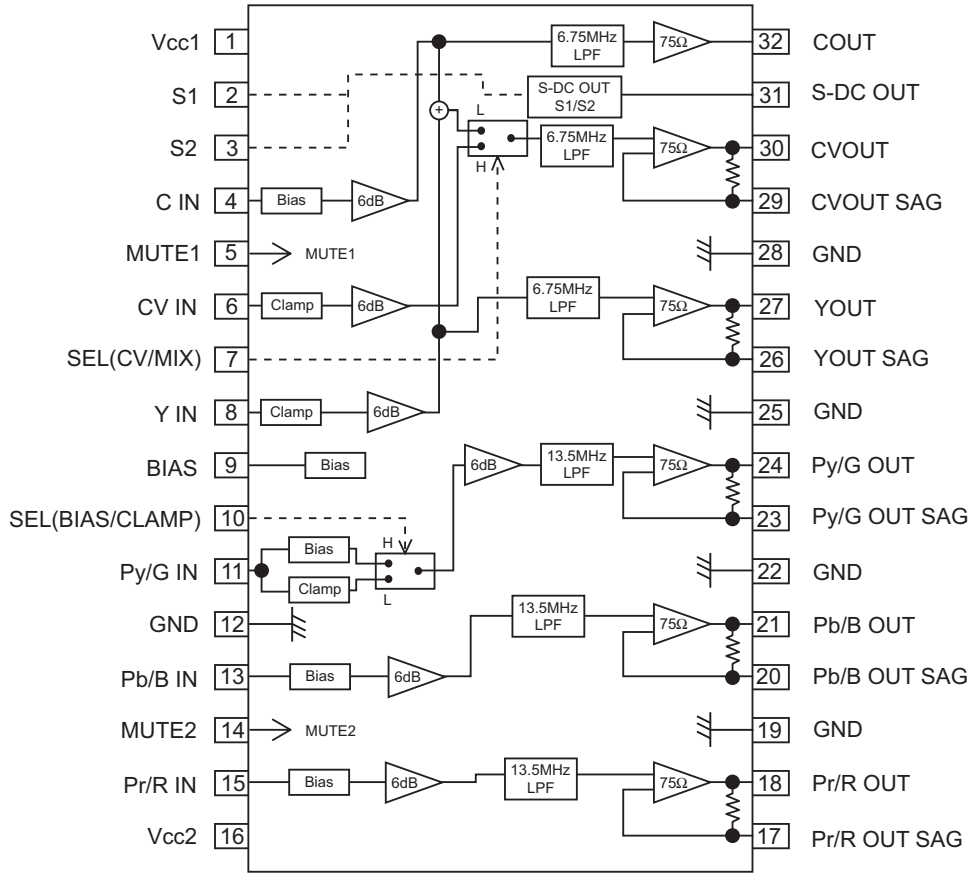

## ADV7324 (MA: IC501, 550)

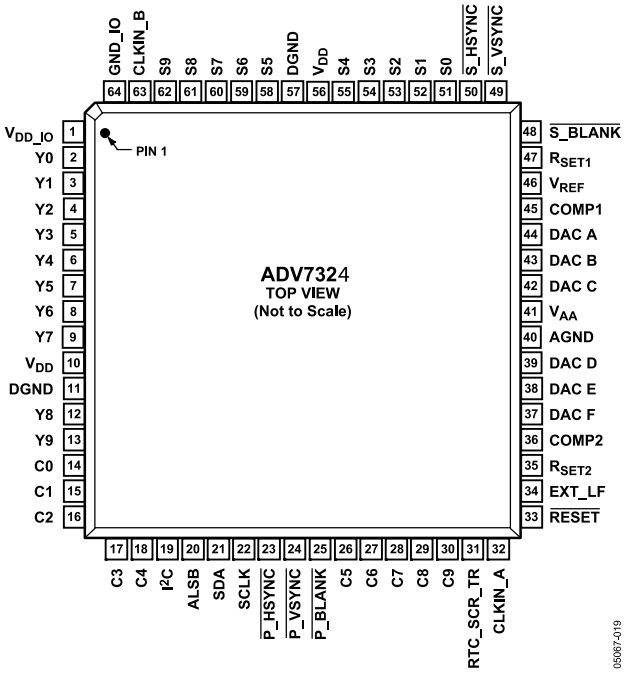


Table 6. Pin Function Descriptions

| Pin No. | Mnemonic | Input/Output | Description |
|---|---|---|---|
| 11, 57 | DGND | G | Digital Ground. |
| 40 | AGND | G | Analog Ground. |
| 32 | CLKIN_A | I | Pixel Clock Input for HD (74.25 MHz Only, PS Only (27 MHz), SD Only (27 MHz). |
| 63 | CLKIN_B | I | Pixel Clock Input. Requires a 27 MHz reference clock for progressive scan mode or a 74.25 MHz (74.1758 MHz) reference clock in HDTV mode. This clock is only used in dual modes. |
| 45, 36 | COMP1, COMP2 | O | Compensation Pin for DACs. Connect 0.1 µF capacitor from COMP pin to $V_{AA}$. |
| 44 | DAC A | O | CVBS/Green/Y/Y Analog Output. |
| 43 | DAC B | O | Chroma/Blue/U/Pb Analog Output. |
| 42 | DAC C | O | Luma/Red/V/Pr Analog Output. |
| 39 | DAC D | O | In SD Only Mode: CVBS/Green/Y Analog Output; in HD Only Mode and Simultaneous HD/SD Mode: Y/Green [HD] Analog Output. |
| 38 | DAC E | O | In SD Only Mode: Luma/Blue/U Analog Output; in HD Only Mode and Simultaneous HD/SD Mode: Pr/Red Analog Output. |
| 37 | DAC F | O | In SD Only Mode: Chroma/Red/V Analog Output; in HD Only Mode and Simultaneous HD/SD Mode: Pb/Blue [HD] Analog Output. |
| 23 | $\overline{\text{P\_HSYNC}}$ | I | Video Horizontal Sync Control Signal for HD in Simultaneous SD/HD Mode and HD Only Mode. |
| 24 | $\overline{\text{P\_VSYNC}}$ | I | Video Vertical Sync Control Signal for HD in Simultaneous SD/HD Mode and HD Only Mode. |
| 25 | $\overline{\text{P\_BLANK}}$ | I | Video Blanking Control Signal for HD in Simultaneous SD/HD Mode and HD Only Mode. |
| 48 | $\overline{\text{S\_BLANK}}$ | I/O | Video Blanking Control Signal for SD Only. |
| 49 | $\overline{\text{S\_VSYNC}}$ | I/O | Video Vertical Sync Control Signal for SD Only. |
| 50 | $\overline{\text{S\_HSYNC}}$ | I/O | Video Horizontal Sync Control Signal for SD Only. |
| 13,12, 9…2 | Y9 to Y0 | I | SD or Progressive Scan/HDTV Input Port for Y Data. Input port for interleaved progressive scan data. The LSB is set up on Pin Y0. For 8-bit data input, LSB is set up on Y2. |
| 30…26, 18…14 | C9 to C0 | I | Progressive Scan/HDTV Input Port 4:4:4 Input Mode. This port is used for the Cb[Blue/U] data. The LSB is set up on Pin C0. For 8-bit data input, LSB is set up on C2. |

| Pin No. | Mnemonic | Input/Output | Description |
|---|---|---|---|
| 62-58<br>55-51 | S9 to S0 | I | SD or Progressive Scan/HDTV Input Port for Cr[Red/V] Data in 4:4:4 Input Mode. LSB is set up on Pin S0. For 8-bit data input, LSB is set up on S2. |
| 33 | $\overline{\text{RESET}}$ | I | This input resets the on-chip timing generator and sets the ADV7324 into default register setting. $\overline{\text{RESET}}$ is an active low signal. |
| 47, 35 | $R_{SET1}$, $R_{SET2}$ | I | A 3040 resistor must be connected from this pin to AGND and is used to control the amplitudes of the DAC outputs. |
| 22 | SCLK | I | $I^2C$ Port Serial Interface Clock Input. |
| 21 | SDA | I/O | $I^2C$ Port Serial Data Input/Output. |
| 20 | ALSB | I | TTL Address Input. This signal sets up the LSB of the $I^2C$ address. When this pin is tied low, the $I^2C$ filter is activated, which reduces noise on the $I^2C$ interface. |
| 1 | $V_{DD\_IO}$ | P | Power Supply for Digital Inputs and Outputs. |
| 10, 56 | $V_{DD}$ | P | Digital Power Supply. |
| 41 | $V_{AA}$ | P | Analog Power Supply. |
| 46 | $V_{REF}$ | I/O | Optional External Voltage Reference Input for DACs or Voltage Reference Output (1.235 V). |
| 34 | EXT_LF | I | External Loop Filter for the Internal PLL. |
| 31 | RTC_SCR_TR | I | Multifunctional Input. Real-time control (RTC) input, timing reset input, subcarrier reset input. |
| 19 | $I^2C$ | I | This input pin must be tied high ($V_{DD\_IO}$) for the ADV7324 to interface over the $I^2C$ port. |
| 64 | GND_IO | | Digital Input/Output Ground. |

## TOP247Y (PD: IC901)

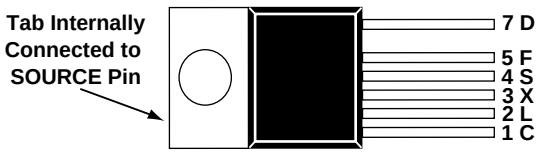


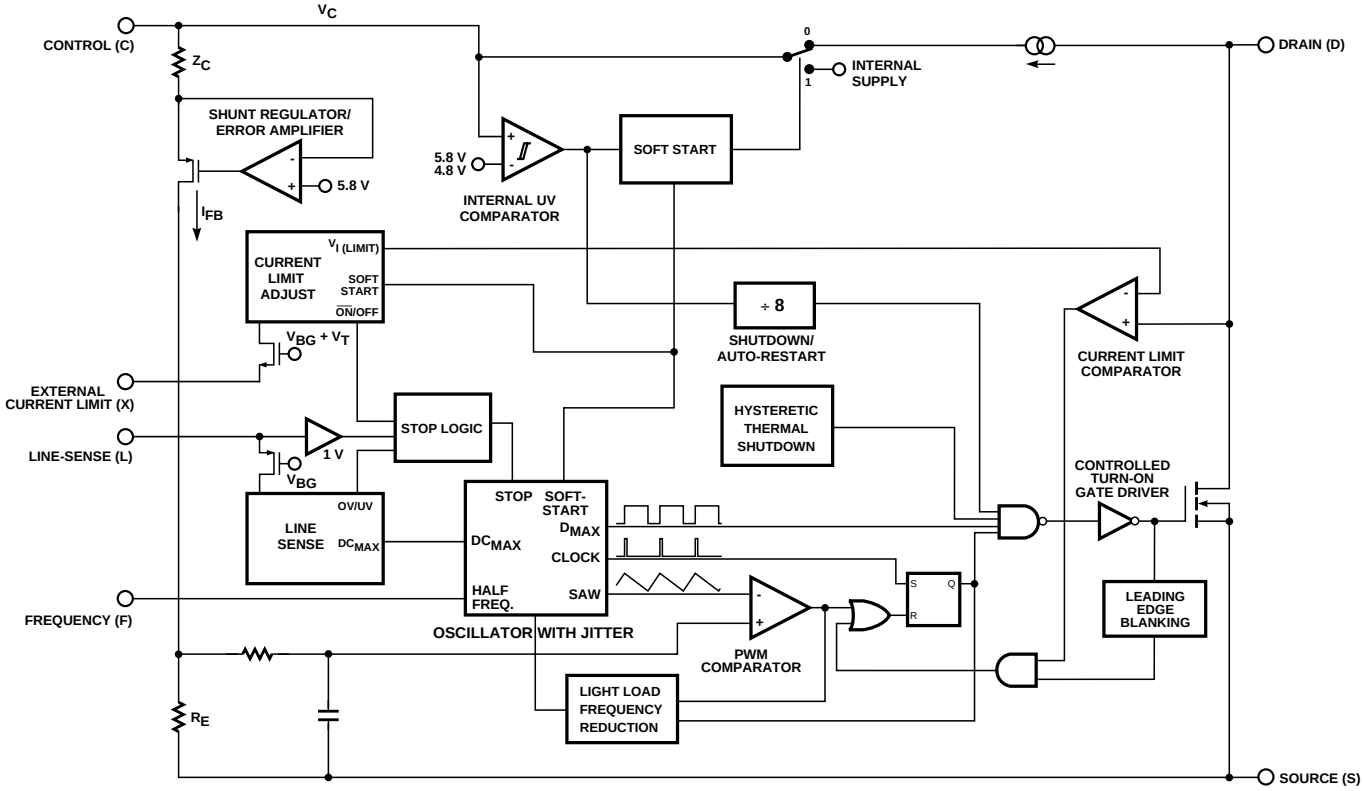

## AK4101AVQ (AU: IC106)

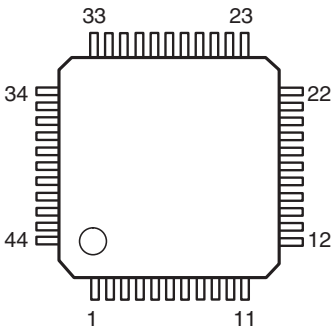


### AK4101VQ Terminal Function

| Pin No. | Pin Name | I/O | Function |
|---|---|---|---|
| 1 | PDN | I | Power down and reset pin |
| 2 | MCLK | I | Master clock input pin |
| 3 | SDTI1 | I | Audio serial data input 1 pin |
| 4 | SDTI2 | I | Audio serial data input 2 pin |
| 5 | SDTI3 | I | Audio serial data input 3 pin |
| 6 | SDTI4 | I | Audio serial data input 4 pin |
| 7 | VDD | — | Power pin, 4.75V ~ 5.25V |
| 8 | VSS | — | Ground pin |
| 9 | BICK | I/O | Audio serial data clock in/out pin |
| 10 | LRCK | I/O | In/out channel clock pin |
| 11 | FS0 | I | Sampling frequency select 0 pin (sync. mode) |
| | CSN | I | Host I/F chip select pin (async. mode) |
| | AKMODE | I | AK4112A mode pin (audio rooting mode) |
| 12 | FS1 | I | Sampling frequency select 1 pin (sync. mode) |
| | CDTI | I | Host I/F data input pin (async. mode) |
| 13 | FS2 | I | Sampling frequency select 2 pin (sync. mode) |
| | CCLK | I | Host I/F bit clock input pin (async. mode) |
| 14 | FS3 | I | Sampling frequency select 3 pin (sync. mode) |
| | CDTO | O | Host I/F data output pin (async. mode) |
| 15 | C1 | I | CH1 status bit input pin |
| 16 | C2 | I | CH2 status bit input pin |
| 17 | C3 | I | CH3 status bit input pin |
| 18 | C4 | I | CH4 status bit input pin |
| 19 | ANS | I | Async./Sync. mode select pin |
| 20 | BLS | I/O | Block start in/out pin |
| 21 | CKS0 | I | Clock mode select 0 pin |
| 22 | VSS | — | Ground pin |
| 23 | CKS1 | I | Clock mode select 1 pin |
| 24 | TXN4 | O | CH4 differential inverted output pin |
| 25 | TXP4 | O | CH4 differential non-inverted output pin |
| 26 | TXN3 | O | CH3 differential inverted output pin |
| 27 | TXP3 | O | CH3 differential non-inverted output pin |
| 28 | VDD | — | Power pin, 4.75V ~ 5.25V |
| 29 | VSS | — | Ground pin |
| 30 | TXN2 | O | CH2 differential inverted output pin |
| 31 | TXP2 | O | CH2 differential non-inverted output pin |
| 32 | TXN1 | O | CH1 differential inverted output pin |
| 33 | TXP1 | O | CH1 differential non-inverted output pin |
| 34 | DIF0 | I | Audio serial I/F select 0 pin |
| 35 | VDD | — | Power pin, 4.75V ~ 5.25V |
| 36 | DIF1 | I | Audio serial I/F select 1 pin |
| 37 | DIF2 | I | Audio serial I/F select 2 pin |
| 38 | U1 | I | CH1 user data bit input pin |
| 39 | U2 | I | CH2 user data bit input pin |
| 40 | U3 | I | CH3 user data bit input pin |
| 41 | U4 | I | CH4 user data bit input pin |
| 42 | V12 | I | CH1&2 validity bit input pin |
| 43 | V34 | I | CH3&4 validity bit input pin |
| 44 | TRANS | I | Audio rooting mode pin (sync. mode) |

## PQ012FZ01ZP (MA: IC102) (AU: IC104, 306)

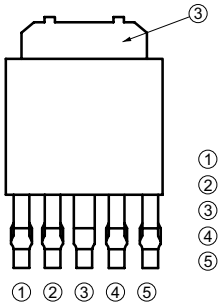


① DC input ($V_{IN}$)
② Bias input ($V_B$)
③ DC output ($V_O$)
④ ON/OFF input ($V_C$)
⑤ GND

## PC123 (PD: IC906)

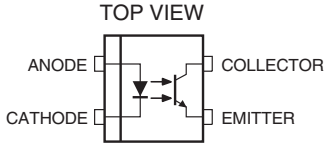

## 2. TRANSISTORS

### RSS100N03TB (PD: TR910)

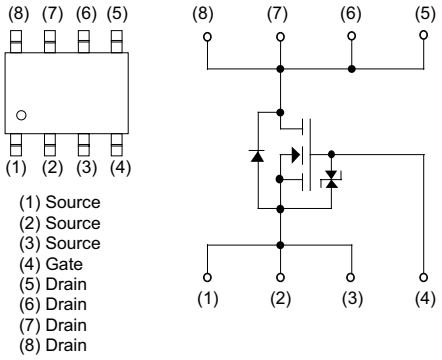


### HN1K02FU (DI: TR803)

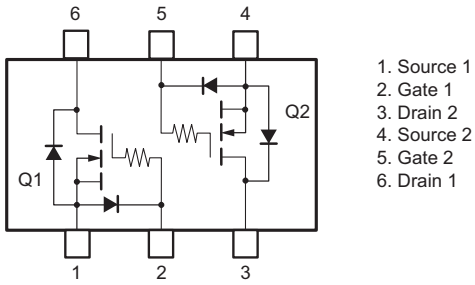


## 3. DIODE

### RL10Z (PD: D913)

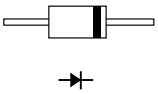

### RB551V-30 (PD: D922)

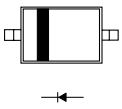

## 4. LED

### SML1216W (PD: LD103)

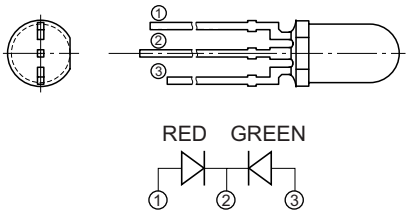


## 5. OTHERS

### GP1UE271XKVF (Remote Control Sensor) (PD: IC102)

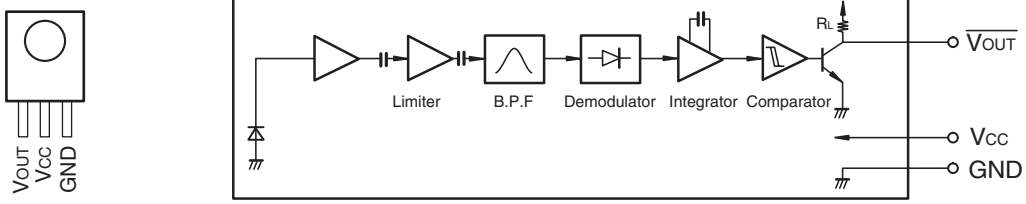

## 6. FL DISPLAY

### FL TUBE (15-BT-97GNK) (PD: FL101)

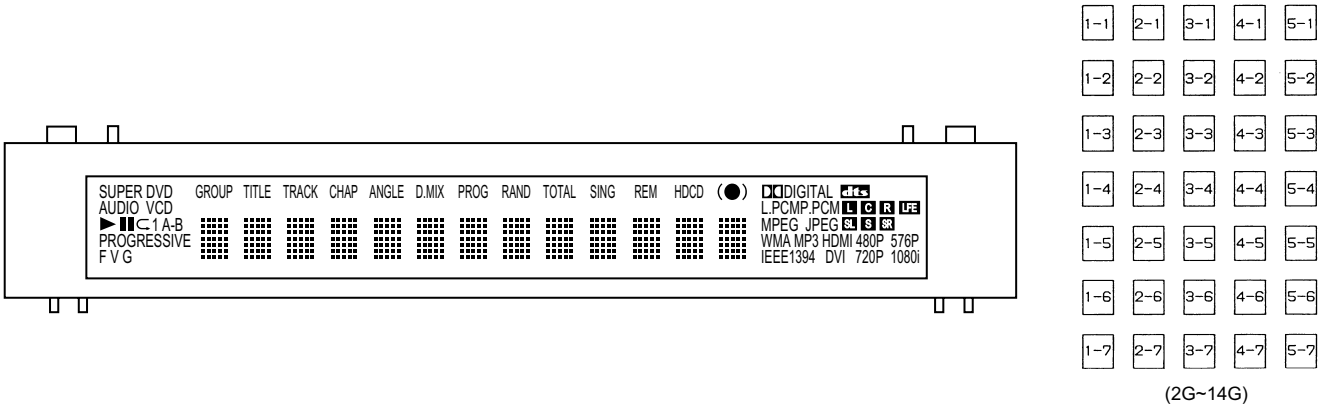


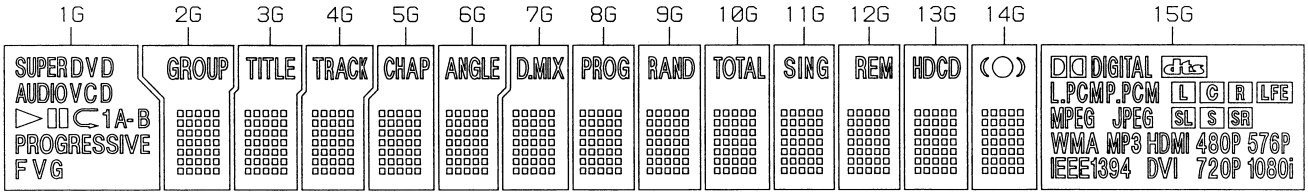


PIN CONNECTION

| PIN NO. | 50 | 49 | 48 | 47 | 46 | 45 | 44 | 43 | 42 | 41 | 40 | 39 | 38 | 37 | 36 | 35 | 34 | 33 | 32 | 31 | 30 | 29 | 28 | 27 | 26 | 25 | 24 | 23 | 22 | 21 | 20 | 19 | 18 | 17 | 16 | 15 | 14 | 13 | 12 | 11 | 10 | 9 | 8 | 7 | 6 | 5 | 4 | 3 | 2 | 1 |
|---|---|---|---|---|---|---|---|---|---|---|---|---|---|---|---|---|---|---|---|---|---|---|---|---|---|---|---|---|---|---|---|---|---|---|---|---|---|---|---|---|---|---|---|---|---|---|---|---|---|---|
| CONNECTION | P36 | P32 | P65 | P54 | P43 | P32 | P21 | P10 | P98 | P87 | P76 | P65 | P54 | P43 | P32 | P21 | P10 | P98 | P87 | P76 | P65 | P54 | P43 | P32 | P21 | P10 | P98 | P87 | P76 | P65 | P54 | P43 | P32 | P21 | P10 | P98 | P87 | P76 | P65 | P54 | P43 | P32 | P21 | P10 | P98 | P87 | P76 | P65 | P54 | P43 | P32 | P21 |

| PIN NO. | 26 | 25 | 24 | 23 | 22 | 21 | 20 | 19 | 18 | 17 | 16 | 15 | 14 | 13 | 12 | 11 | 10 | 9 | 8 | 7 | 6 | 5 | 4 | 3 | 2 | 1 |
|---|---|---|---|---|---|---|---|---|---|---|---|---|---|---|---|---|---|---|---|---|---|---|---|---|---|---|
| CONNECTION | F- | NX | NP | NP | P28 | P29 | P30 | P31 | P32 | P33 | P34 | P35 | NC | NC | NC | NC | NC | NC | NC | NC | NC | NC | NC | NC | NP | F+ |

NOTE
1) F-,F+ --- Filament
2) NP ------ No pin
3) DL ------ Datum Line
4) 1G~15G --- Grid
5) NC ------ No connection
(NC pin should be electrically open on the PC board)

(unit in mm)

15-BT-97GNK
OUTER DIMENSION

ANODE CONNECTION

| | 1G | 2G | 3G | 4G | 5G | 6G | 7G | 8G | 9G | 10G | 11G | 12G | 13G | 14G | 15G |
|---|---|---|---|---|---|---|---|---|---|---|---|---|---|---|---|
| P1 | SUPER | 1-1 | 1-1 | 1-1 | 1-1 | 1-1 | 1-1 | 1-1 | 1-1 | 1-1 | 1-1 | 1-1 | 1-1 | 1-1 | L |
| P2 | DVD | 2-1 | 2-1 | 2-1 | 2-1 | 2-1 | 2-1 | 2-1 | 2-1 | 2-1 | 2-1 | 2-1 | 2-1 | 2-1 | C |
| P3 | AUDIO | 3-1 | 3-1 | 3-1 | 3-1 | 3-1 | 3-1 | 3-1 | 3-1 | 3-1 | 3-1 | 3-1 | 3-1 | 3-1 | LFE |
| P4 | V (CD) | 4-1 | 4-1 | 4-1 | 4-1 | 4-1 | 4-1 | 4-1 | 4-1 | 4-1 | 4-1 | 4-1 | 4-1 | 4-1 | R |
| P5 | (V)CD | 5-1 | 5-1 | 5-1 | 5-1 | 5-1 | 5-1 | 5-1 | 5-1 | 5-1 | 5-1 | 5-1 | 5-1 | 5-1 | SL |
| P6 | ▷ | 1-2 | 1-2 | 1-2 | 1-2 | 1-2 | 1-2 | 1-2 | 1-2 | 1-2 | 1-2 | 1-2 | 1-2 | 1-2 | SR |
| P7 | ▯▯ | 2-2 | 2-2 | 2-2 | 2-2 | 2-2 | 2-2 | 2-2 | 2-2 | 2-2 | 2-2 | 2-2 | 2-2 | 2-2 | S |
| P8 | ⊂ | 3-2 | 3-2 | 3-2 | 3-2 | 3-2 | 3-2 | 3-2 | 3-2 | 3-2 | 3-2 | 3-2 | 3-2 | 3-2 | – |
| P9 | 1 | 4-2 | 4-2 | 4-2 | 4-2 | 4-2 | 4-2 | 4-2 | 4-2 | 4-2 | 4-2 | 4-2 | 4-2 | 4-2 | – |
| P10 | A- | 5-2 | 5-2 | 5-2 | 5-2 | 5-2 | 5-2 | 5-2 | 5-2 | 5-2 | 5-2 | 5-2 | 5-2 | 5-2 | – |
| P11 | B | 1-3 | 1-3 | 1-3 | 1-3 | 1-3 | 1-3 | 1-3 | 1-3 | 1-3 | 1-3 | 1-3 | 1-3 | 1-3 | WMA |
| P12 | PROGRESSIVE | 2-3 | 2-3 | 2-3 | 2-3 | 2-3 | 2-3 | 2-3 | 2-3 | 2-3 | 2-3 | 2-3 | 2-3 | 2-3 | MP3 |
| P13 | F | 3-3 | 3-3 | 3-3 | 3-3 | 3-3 | 3-3 | 3-3 | 3-3 | 3-3 | 3-3 | 3-3 | 3-3 | 3-3 | DIGITAL |
| P14 | V (FVG) | 4-3 | 4-3 | 4-3 | 4-3 | 4-3 | 4-3 | 4-3 | 4-3 | 4-3 | 4-3 | 4-3 | 4-3 | 4-3 | dts |
| P15 | G | 5-3 | 5-3 | 5-3 | 5-3 | 5-3 | 5-3 | 5-3 | 5-3 | 5-3 | 5-3 | 5-3 | 5-3 | 5-3 | MPEG |
| P16 | – | 1-4 | 1-4 | 1-4 | 1-4 | 1-4 | 1-4 | 1-4 | 1-4 | 1-4 | 1-4 | 1-4 | 1-4 | 1-4 | L.PCM |
| P17 | – | 2-4 | 2-4 | 2-4 | 2-4 | 2-4 | 2-4 | 2-4 | 2-4 | 2-4 | 2-4 | 2-4 | 2-4 | 2-4 | P.PCM |
| P18 | – | 3-4 | 3-4 | 3-4 | 3-4 | 3-4 | 3-4 | 3-4 | 3-4 | 3-4 | 3-4 | 3-4 | 3-4 | 3-4 | JPEG |
| P19 | – | 4-4 | 4-4 | 4-4 | 4-4 | 4-4 | 4-4 | 4-4 | 4-4 | 4-4 | 4-4 | 4-4 | 4-4 | 4-4 | DVI |
| P20 | – | 5-4 | 5-4 | 5-4 | 5-4 | 5-4 | 5-4 | 5-4 | 5-4 | 5-4 | 5-4 | 5-4 | 5-4 | 5-4 | HDMI |
| P21 | – | 1-5 | 1-5 | 1-5 | 1-5 | 1-5 | 1-5 | 1-5 | 1-5 | 1-5 | 1-5 | 1-5 | 1-5 | 1-5 | IEEE1394 |
| P22 | – | 2-5 | 2-5 | 2-5 | 2-5 | 2-5 | 2-5 | 2-5 | 2-5 | 2-5 | 2-5 | 2-5 | 2-5 | 2-5 | 480P |
| P23 | – | 3-5 | 3-5 | 3-5 | 3-5 | 3-5 | 3-5 | 3-5 | 3-5 | 3-5 | 3-5 | 3-5 | 3-5 | 3-5 | 720P |
| P24 | – | 4-5 | 4-5 | 4-5 | 4-5 | 4-5 | 4-5 | 4-5 | 4-5 | 4-5 | 4-5 | 4-5 | 4-5 | 4-5 | 1080i |
| P25 | – | 5-5 | 5-5 | 5-5 | 5-5 | 5-5 | 5-5 | 5-5 | 5-5 | 5-5 | 5-5 | 5-5 | 5-5 | 5-5 | 576P |
| P26 | – | 1-6 | 1-6 | 1-6 | 1-6 | 1-6 | 1-6 | 1-6 | 1-6 | 1-6 | 1-6 | 1-6 | 1-6 | 1-6 | – |
| P27 | – | 2-6 | 2-6 | 2-6 | 2-6 | 2-6 | 2-6 | 2-6 | 2-6 | 2-6 | 2-6 | 2-6 | 2-6 | 2-6 | – |
| P28 | – | 3-6 | 3-6 | 3-6 | 3-6 | 3-6 | 3-6 | 3-6 | 3-6 | 3-6 | 3-6 | 3-6 | 3-6 | 3-6 | – |
| P29 | – | 4-6 | 4-6 | 4-6 | 4-6 | 4-6 | 4-6 | 4-6 | 4-6 | 4-6 | 4-6 | 4-6 | 4-6 | 4-6 | – |
| P30 | – | 5-6 | 5-6 | 5-6 | 5-6 | 5-6 | 5-6 | 5-6 | 5-6 | 5-6 | 5-6 | 5-6 | 5-6 | 5-6 | – |
| P31 | – | 1-7 | 1-7 | 1-7 | 1-7 | 1-7 | 1-7 | 1-7 | 1-7 | 1-7 | 1-7 | 1-7 | 1-7 | 1-7 | – |
| P32 | – | 2-7 | 2-7 | 2-7 | 2-7 | 2-7 | 2-7 | 2-7 | 2-7 | 2-7 | 2-7 | 2-7 | 2-7 | 2-7 | – |
| P33 | – | 3-7 | 3-7 | 3-7 | 3-7 | 3-7 | 3-7 | 3-7 | 3-7 | 3-7 | 3-7 | 3-7 | 3-7 | 3-7 | – |
| P34 | – | 4-7 | 4-7 | 4-7 | 4-7 | 4-7 | 4-7 | 4-7 | 4-7 | 4-7 | 4-7 | 4-7 | 4-7 | 4-7 | – |
| P35 | – | 5-7 | 5-7 | 5-7 | 5-7 | 5-7 | 5-7 | 5-7 | 5-7 | 5-7 | 5-7 | 5-7 | 5-7 | 5-7 | – |
| P36 | – | GROUP | TITLE | TRACK | CHAP | ANGLE | D.MIX | PROG | RAND | TOTAL | SING | REM | HDCD | (○) | – |

# PRINTED WIRING BOARDS

## GU-3749 MAIN/A. VIDEO P.W.B. UNIT

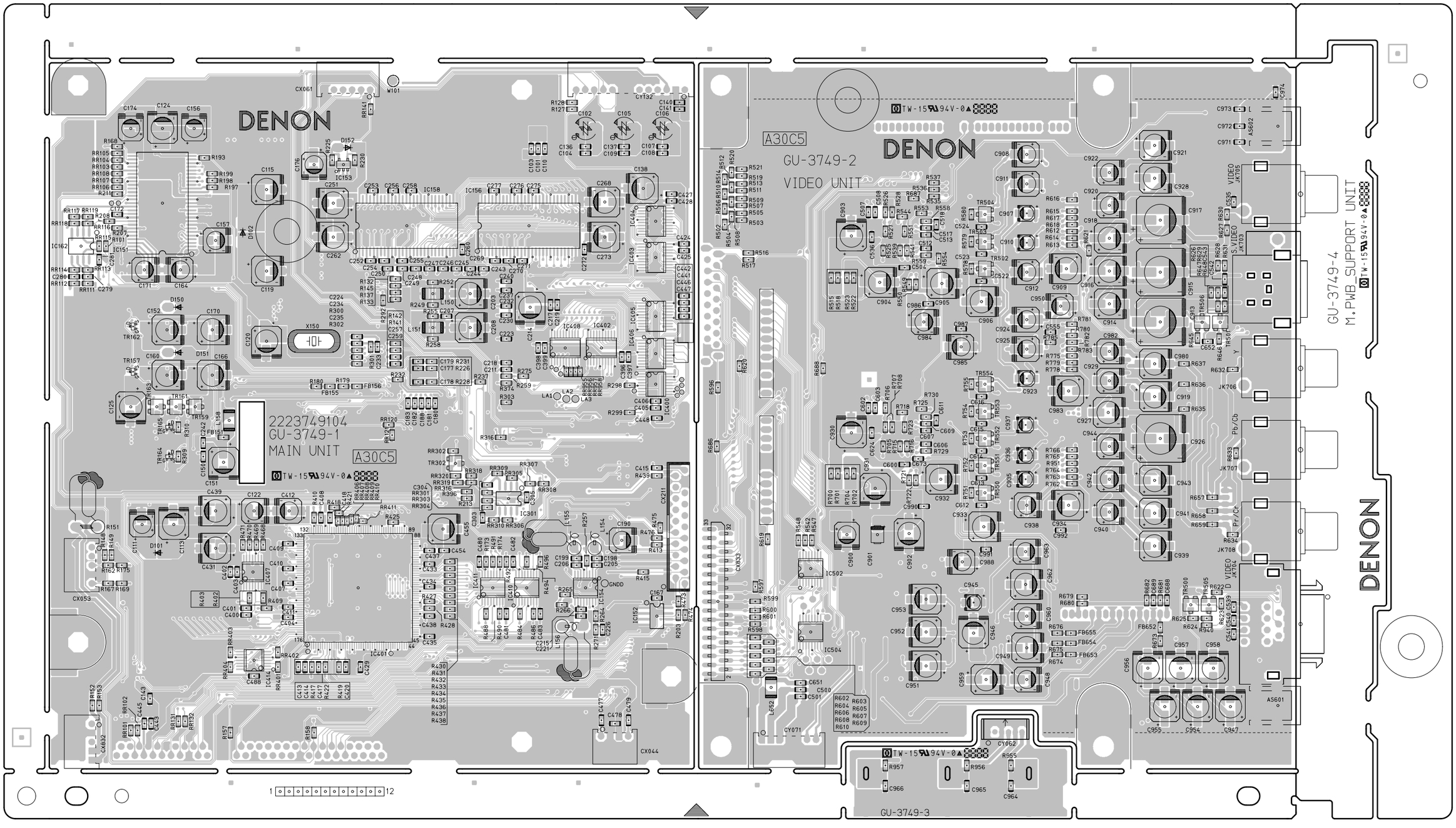


COMPONENT SIDE

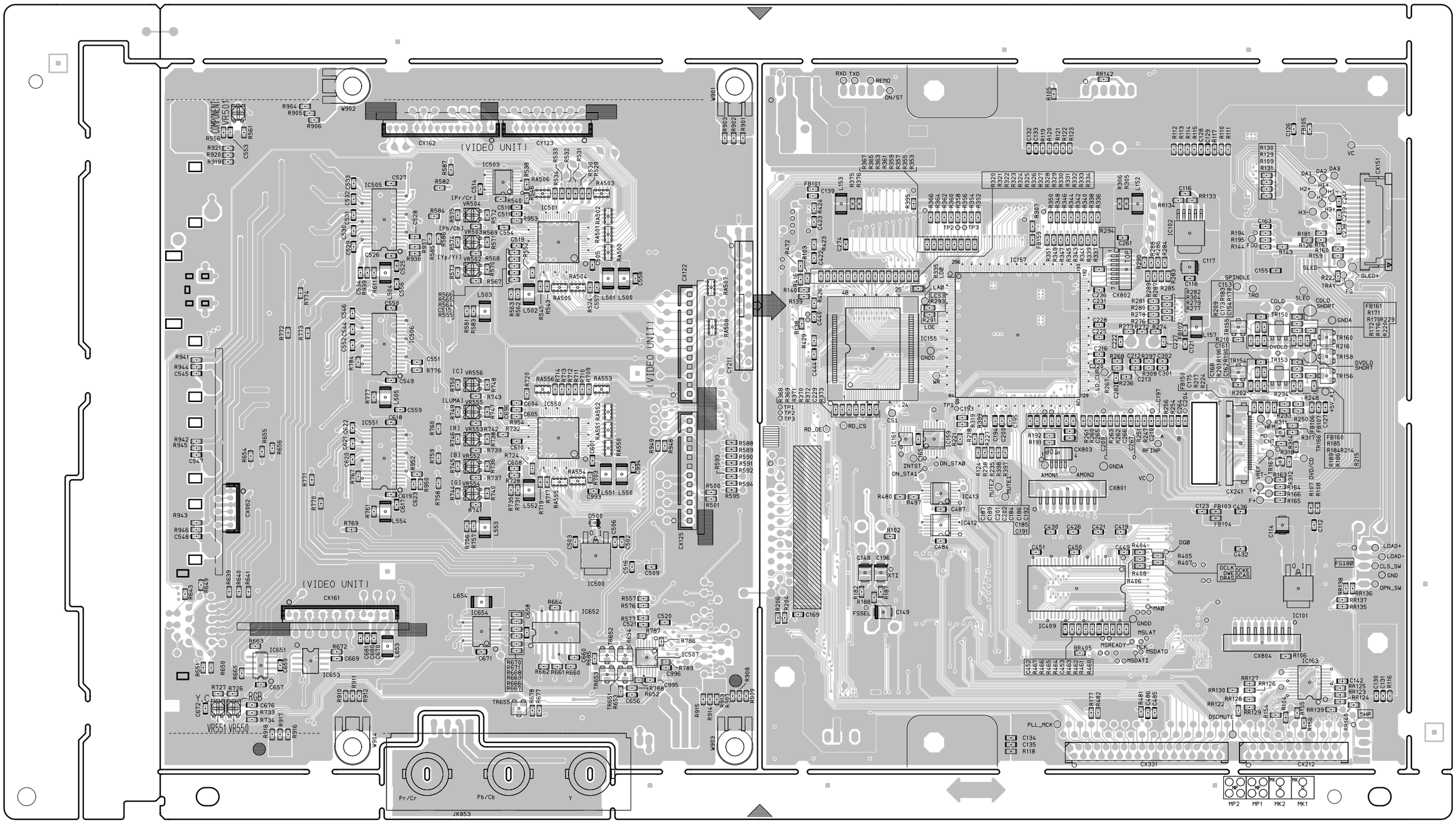
(VIDEO UNIT)
(VIDEO UNIT)
(VIDEO UNIT)
COMPONENT
VR550
VR551
RGB
Y C
Pr/Cr
Pb/Cb
Y
JK853
RXD TXD
REMO
DN/ST
RD_DE
RD_CS
PLL_MCK
SPINDLE
SLED
TRO
FOO
TRAY
FG
SLED+
LOAD+
LOAD-
CLS_SW
GND
OPN_SW
FG100
DQ0
MA0
MSLAT
MSREADY
MSDATO
MSDATI
DCLK
DCKE
DWE
DCAS
DRAS
CDLD
CDLD SHORT
GNDA
DVDLD
DVDLD SHORT
VC
RFINP
AMON1
AMON2
MUTE1
MUTE2
INT5T
DN_STA0
DN_STA1
XTI
FSSEL
LD_DRIVE
MP2
MP1
MK2
MK1
CX212
CX331
CX241
CX803
CX801
CX804
CX161
CX062
IC500
IC501
IC503
IC505
IC506
IC550
IC551
IC651
IC652
IC653
IC654
IC507
IC157
IC155
IC159
IC161
IC102
IC101
IC409
IC412
IC413
IC163

FOIL SIDE

## GU-3750 POWER/DISPLAY P.W.B. UNIT

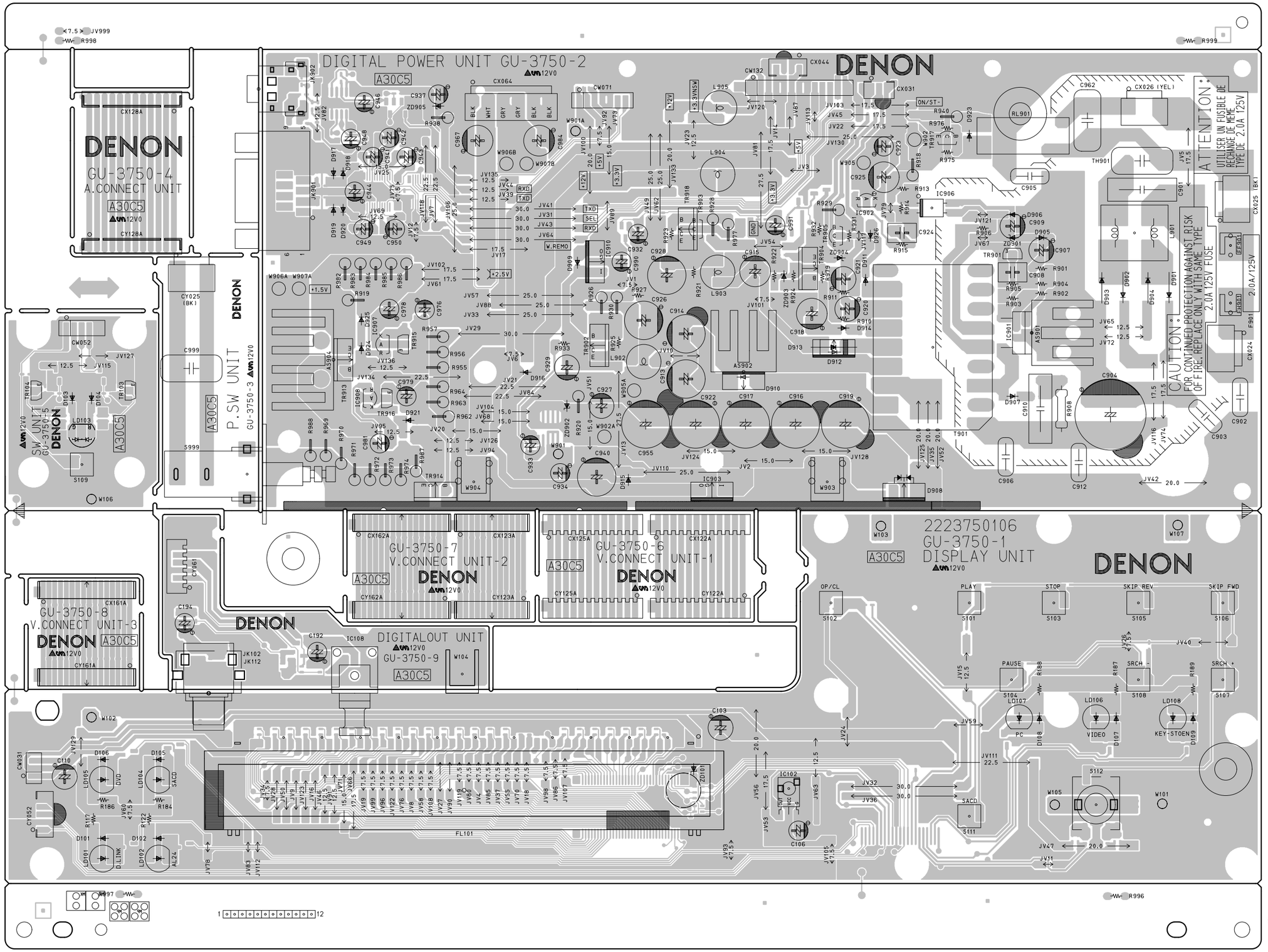


COMPONENT SIDE

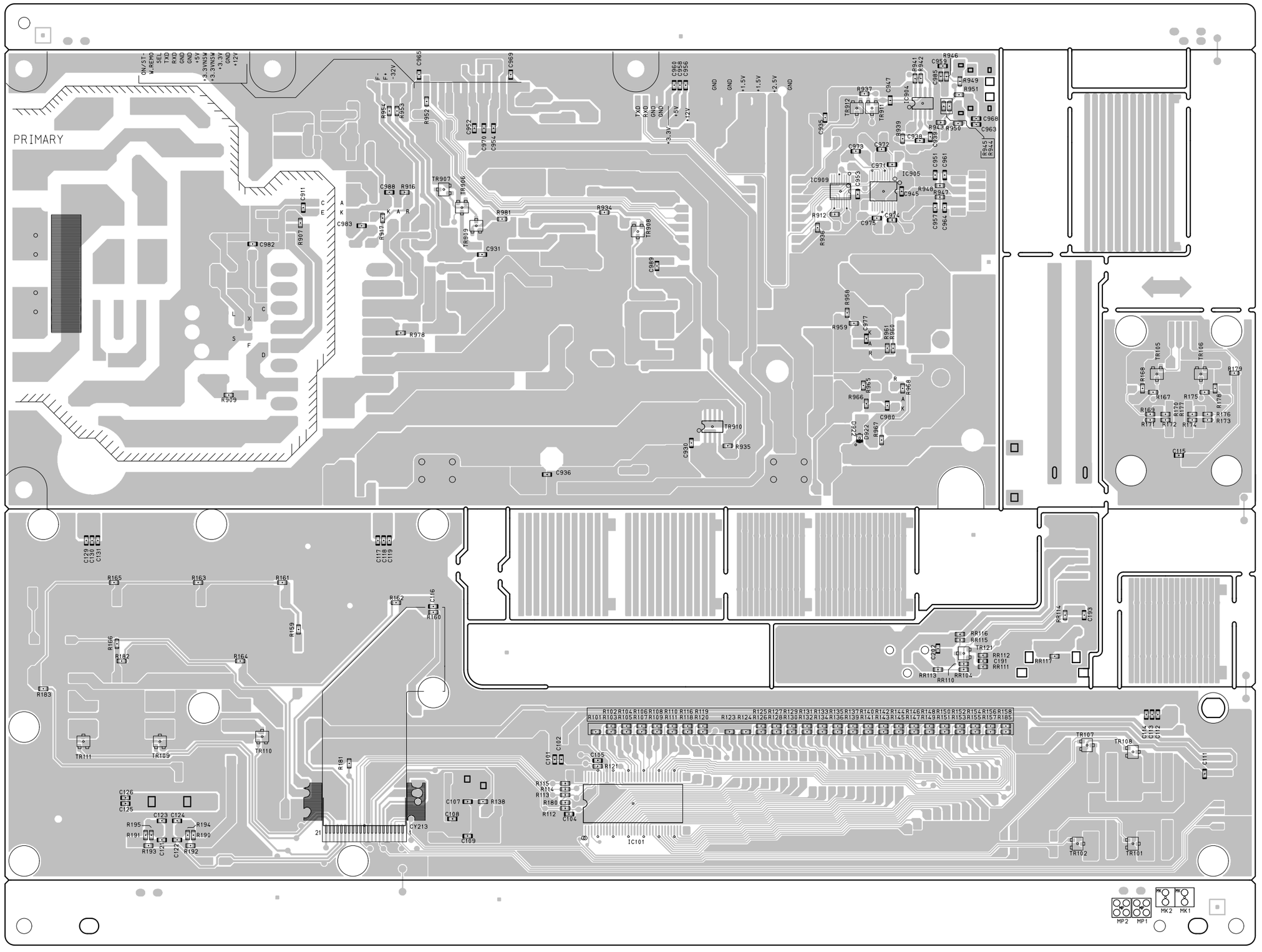
PRIMARY
ON/ST-BY
W.REMO
SEL
TXD
RXD
GND
GND
+5V
+3.3VNSW
+3.3VNSW
+3.3V
GND
+12V
F-
F+
-32V
TXD
RXD
GND
GND
+3.3V
+5V
+12V
GND
GND
+1.5V
+1.5V
+2.5V
GND
IC909
IC905
IC904
TR907
TR906
TR908
TR909
TR910
TR912
TR911
TR121
TR101
TR102
TR105
TR106
TR107
TR108
TR109
TR110
TR111
IC101
CY213
MK1
MK2
MP1
MP2
FOIL SIDE

## GU-3751 AUDIO P.W.B. UNIT

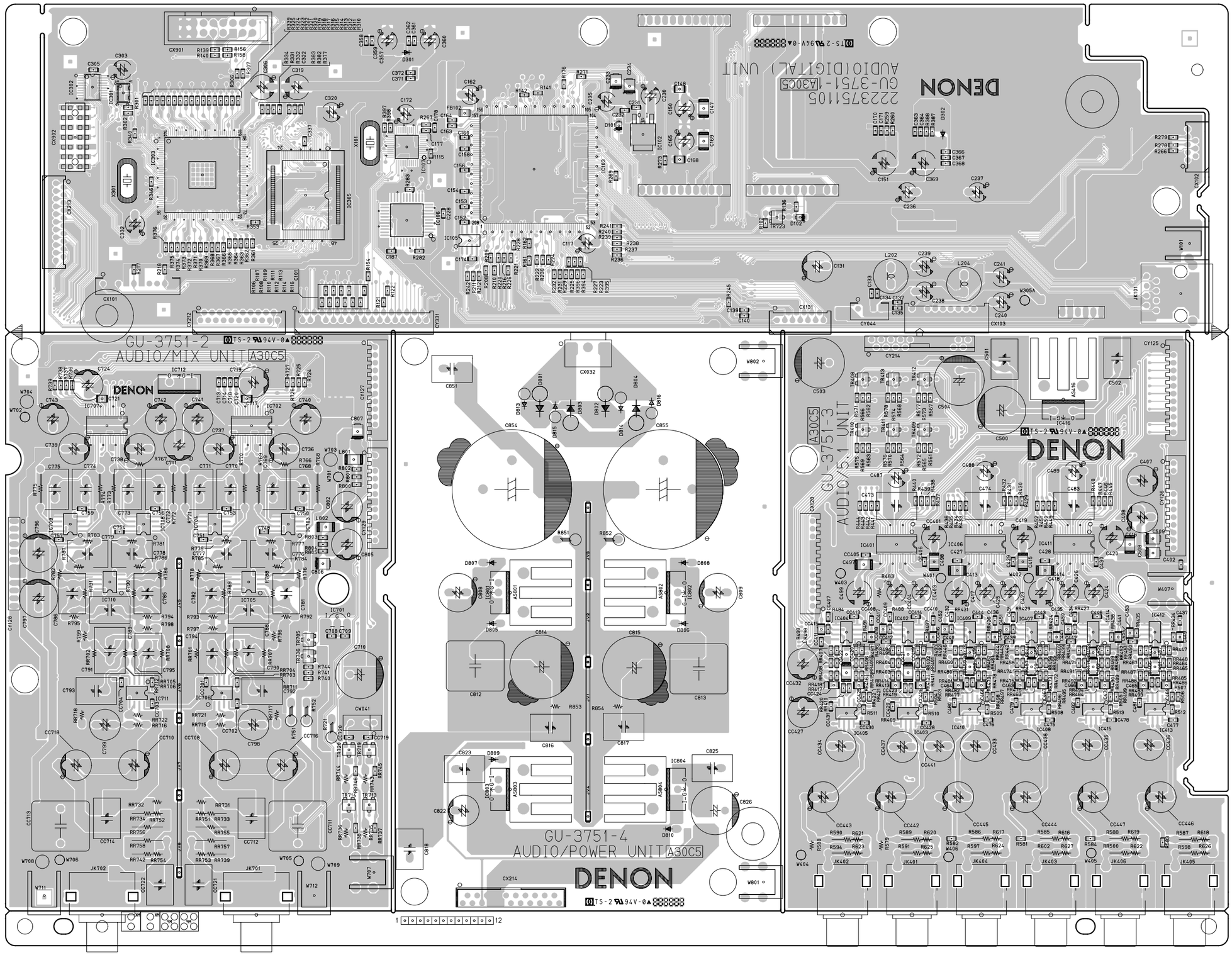


COMPONENT SIDE

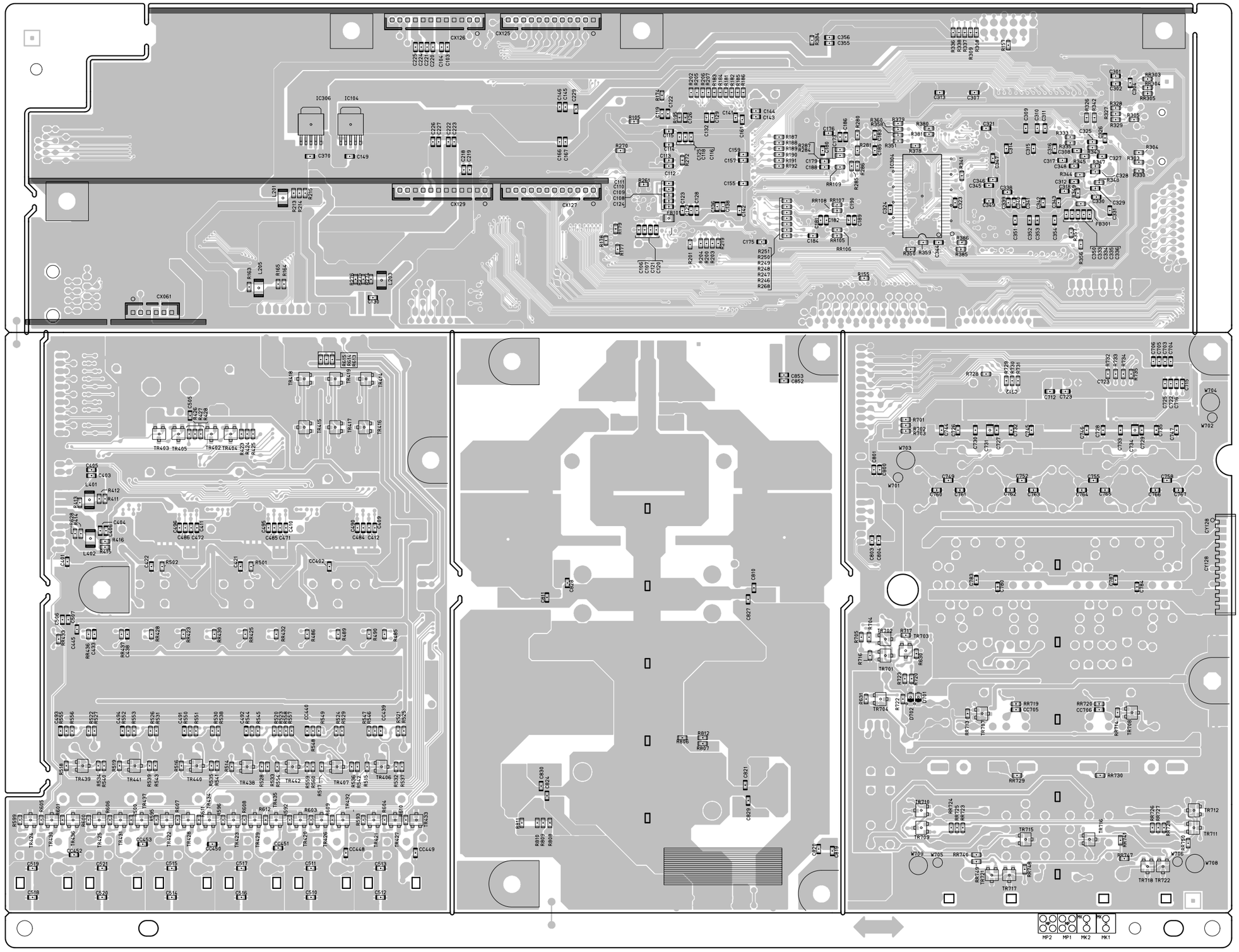

FOIL SIDE

## GU-3752 DIGITAL VIDEO P.W.B. UNIT

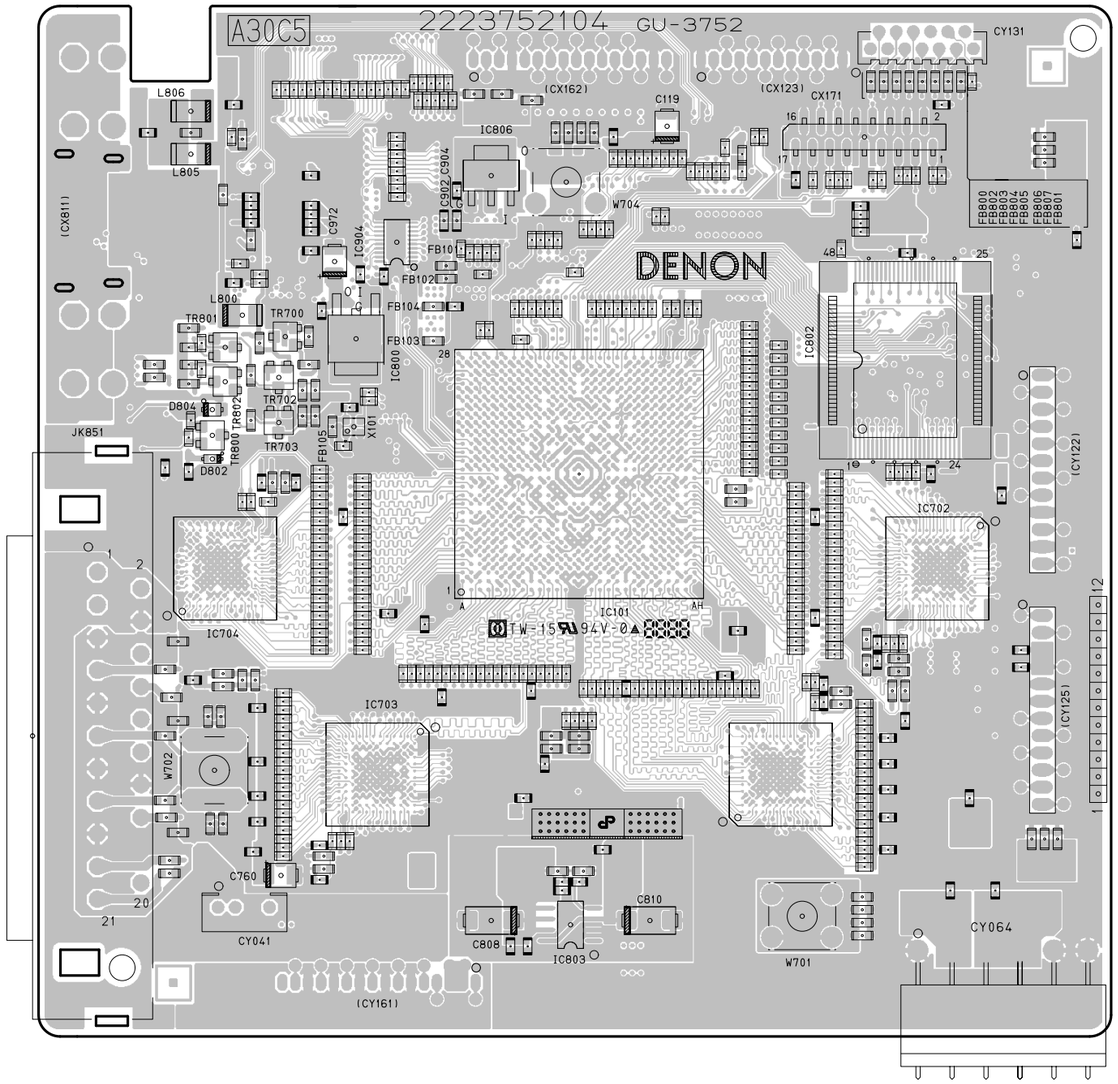


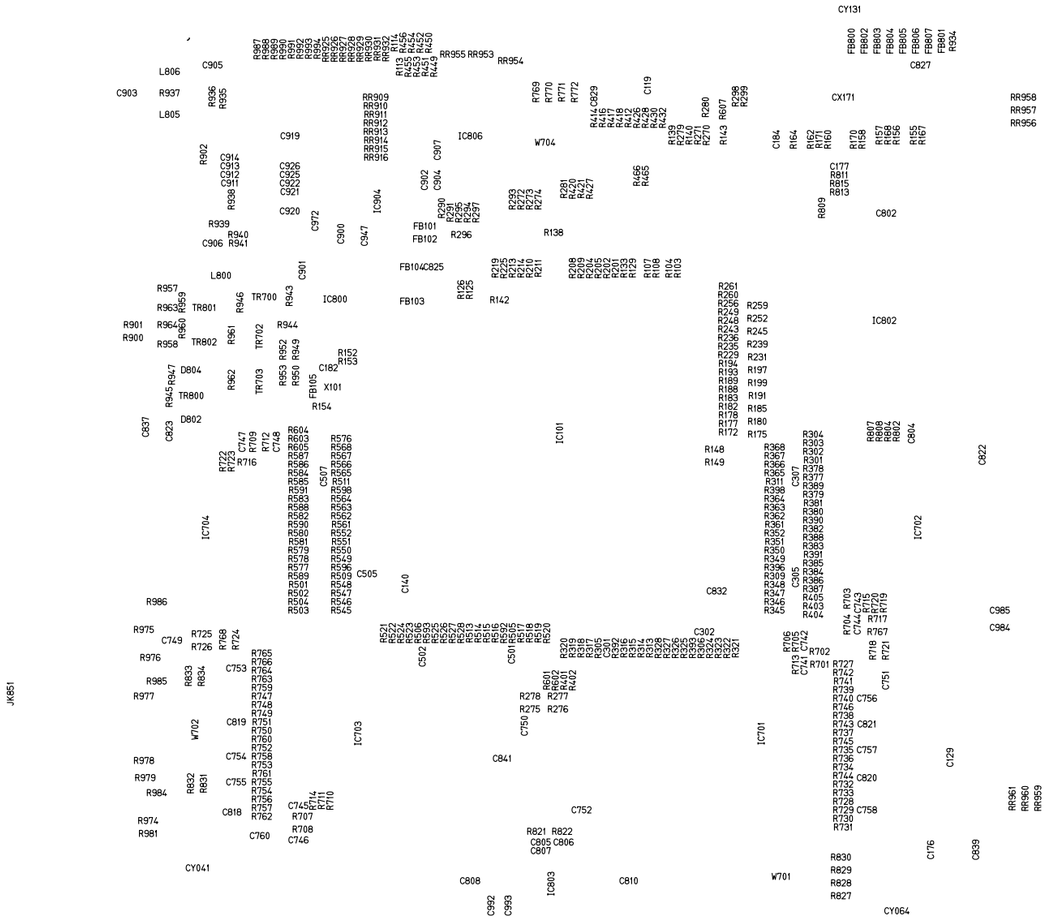

**COMPONENT SIDE**

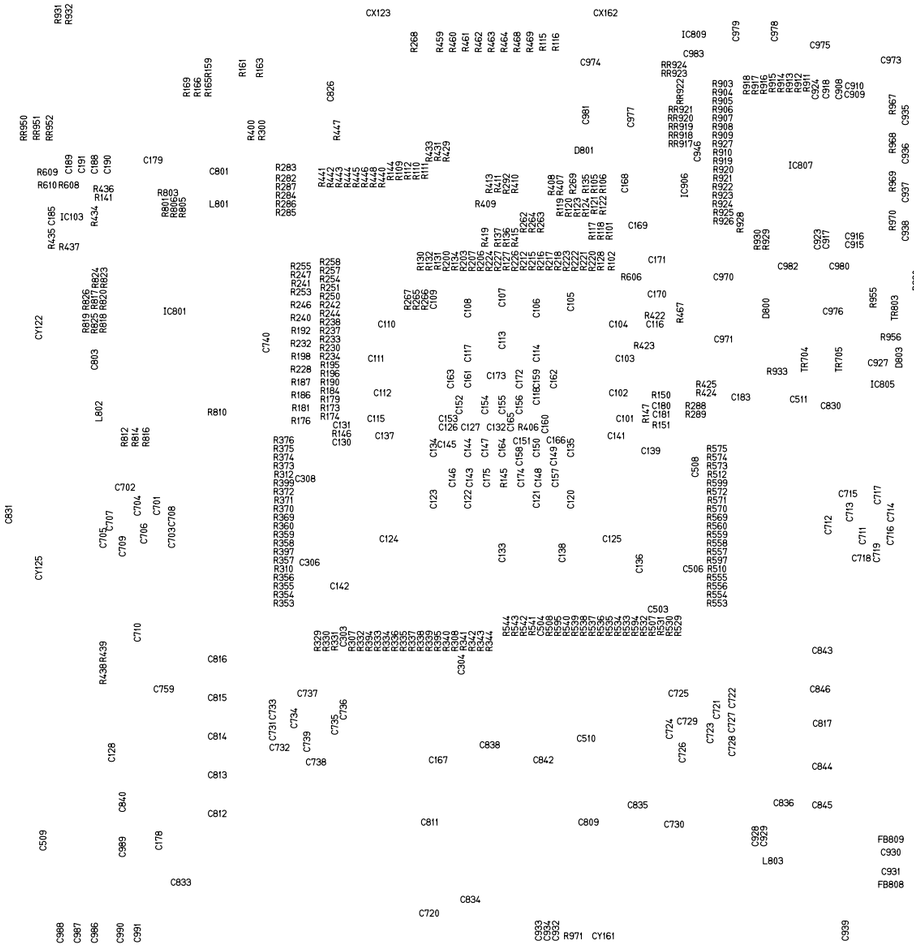

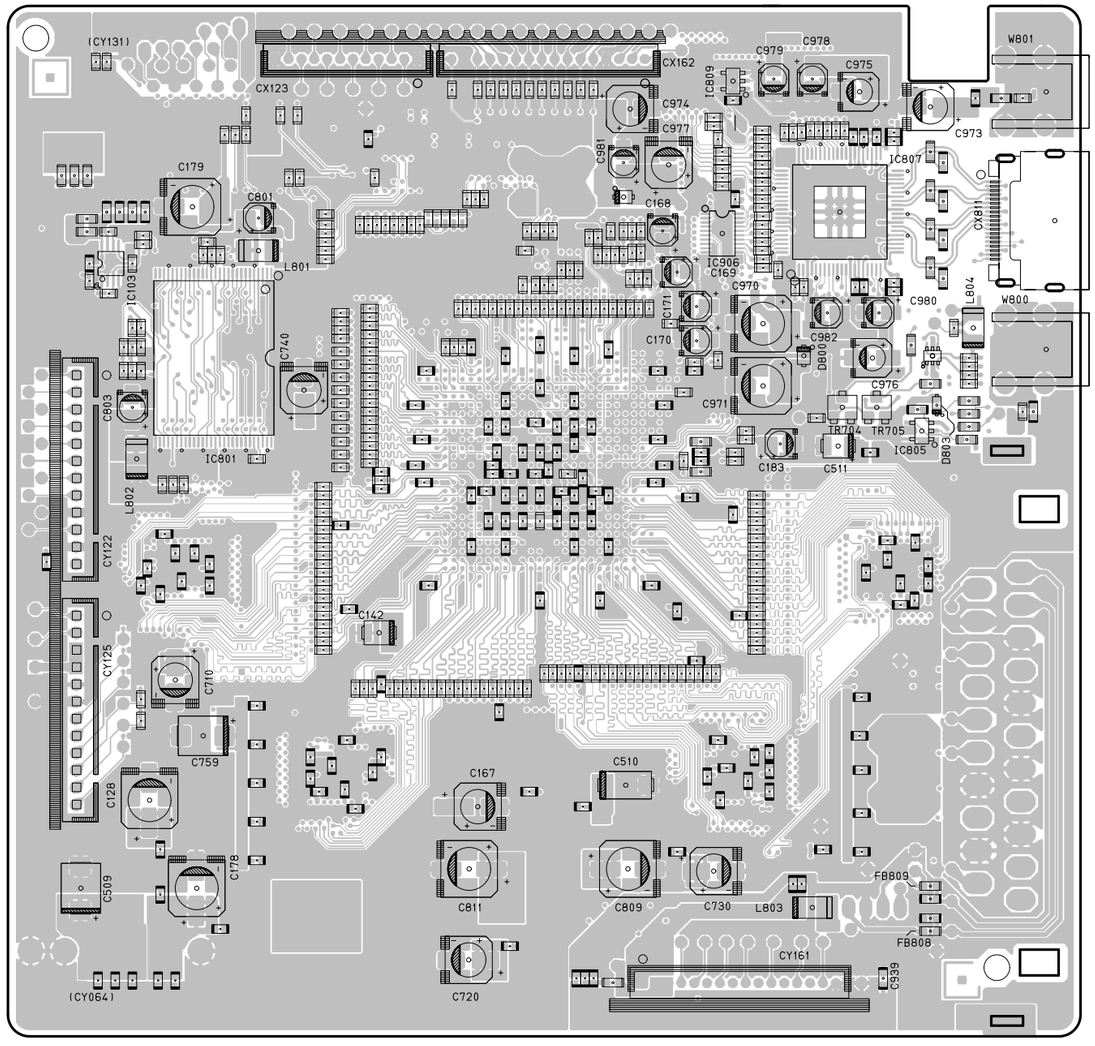


FOIL SIDE

## GU-3793 FAN POWER P.W.B. UNIT

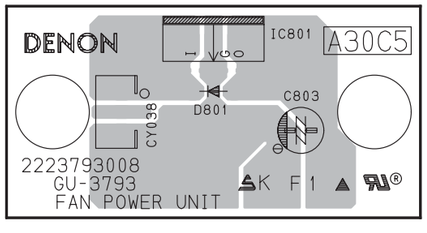


COMPONENT SIDE

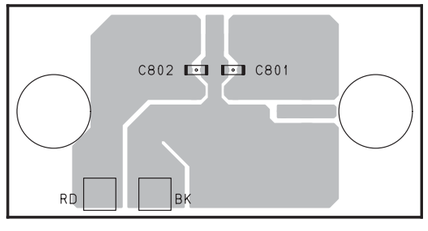


FOIL SIDE

# NOTE FOR PARTS LIST

- Part indicated with the mark "nsp" are not always in stock and possibly to take a long period of time for supplying, or in some case supplying of part may be refused.
- When ordering of part, clearly indicate "1" and "I" (i) to avoid mis-supplying.
- Ordering part without stating its part number can not be supplied.
- Part indicated with the mark " ★ " is not illustrated in the exploded view.
- Not including General-purpose Carbon Film Resistor in the P.W.Board parts list. (Refer to the Schematic Diagram for those parts.)
- Not including General-purpose Carbon Chip Resistor in the P.W.Board parts list. (Refer to the Schematic Diagram for those parts.)

**WARNING:**
Parts marked with this symbol ⚠ have critical characteristics.
Use ONLY replacement parts recommended by the manufacturer.

# 部品表について

1．nsp 印の部品は常時在庫していませんので供給に長時間を要することがあります。
場合によっては、供給をお断りすることがあります。
2．部品を発注する際は特に数字の " 1 " と英字の " I " との区別をはっきり記入してください。
3．部品番号を表示していない部品は供給できません。
4．⚠印の部品は安全上重要な部品です。交換するときは、安全および性能維持のため必ず指定の部品をご使用ください。
5．★印のついている部品は分解図中には記載していません。
6．汎用カーボン抵抗器は記載していません。定数は回路図を参照願います。
7．汎用カーボンチップ抵抗器は記載していません。定数は回路図を参照願います。
8．部品表の抵抗器、コンデンサの品名記号の読み方は表を参照してください。

## ● Resistors

**Ex.:** RN (Type) 14K (Shape and performance) 2E (Power) 182 (Resistance) G (Allowable error) FR (Others)

| | | | |
|---|---|---|---|
| RD : Carbon | 2B : 1/8W | F : ±1% | P : Pulse-resistant type |
| RC : Composition | 2E : 1/4W | G : ±2% | NL : Low noise type |
| RS : Metal oxide film | 2H : 1/2W | J : ±5% | NB : Non-burning type |
| RW : Winding | 3A : 1W | K : ±10% | FR : Fuse-resistor |
| RN : Metal film | 3D : 2W | M : ±20% | F : Lead wire forming |
| RK : Metal mixture | 3F : 3W | | |
| | 3H : 5W | | |

**✻ Resistance**

1 8 2 ⇒ 1800 ohm = 1.8 kohm
Indicates number of zeros after effective number.
2-digit effective number.
• Units: ohm

1 R 2 ⇒ 1.2 ohm
1-digit effective number.
2-digit effective number, decimal point indicated by R.
• Units: ohm

## ● Capacitors

**Ex.:** CE (Type) 04W (Shape and performance) 1H (Dielectric strength) 2R2 (Capacity) M (Allowable error) BP (Others)

| | | | |
|---|---|---|---|
| CE : Aluminum foil electrolytic | 0J : 6.3V | F : ±1% | HS : High stability type |
| CA : Aluminum solid electrolytic | 1A : 10V | G : ±2% | BP : Non-polar type |
| CS : Tantalum electrolytic | 1C : 16V | J : ±5% | HR : Ripple-resistant type |
| CQ : Film | 1E : 25V | K : ±10% | DL : For change and discharge |
| CK : Ceramic | 1V : 35V | M : ±20% | HF : For assuring high requency |
| CC : Ceramic | 1H : 50V | Z : +80% –20% | U : UL part |
| CP : Oil | 2A : 100V | P : +100% –0% | C : CSA part |
| CM : Mica | 2B : 125V | C : ±0.25pF | W : UL-CSA type |
| CF : Metallized | 2C : 160V | D : ±0.5pF | F : Lead wire forming |
| CH : Metallized | 2D : 200V | = : Others | |
| | 2E : 250V | | |
| | 2H : 500V | | |
| | 2J : 630V | | |

**✻ Capacity (electrolyte only)**

2 2 2 ⇒ 2200μF
Indicates number of zeros after effective number.
2-digit effective number.
• Units: μF.

2 R 2 ⇒ 2.2μF
1-digit effective number.
2-digit effective number, decimal point indicated by R.
• Units: μF.

**✻ Capacity (except electrolyte)**

2 2 2 ⇒ 2200pF=0.0022μF
(More than 2) Indicates number of zeros after effective number.
2-digit effective number.
• Units: pF.

2 2 1 ⇒ 220pF
(0 or 1) Indicates number of zeros after effective number.
2-digit effective number.
• Units: pF.

• When the dielectric strength is indicated in AC, "AC" is included after the dieelectric strength value.

## ●抵抗器

例) RN 種類 / 14K 形状特性 / 2E 電力 / 182 抵抗値 / G 許容差 / FR その他

| | | | |
|---|---|---|---|
| RD ： カーボン | 2B ： 1/8 W | F ： ±1% | P ： 耐パルス形 |
| RC ： 固定体 | 2E ： 1/4 W | G ： ±2% | NL ： 低雑音形 |
| RS ： 金属系皮膜 | 2H ： 1/2 W | J ： ±5% | NB ： 不燃形 |
| RW ： 巻線 | 3A ： 1 W | K ： ±10% | FR ： ヒューズ抵抗 |
| RN ： 金属皮膜 | 3D ： 2 W | M ： ±20% | F ： リード線成形 |
| RK ： 金属混合体 | 3F ： 3 W | | |
| | 3H ： 5 W | | |

＊抵抗値

18 2 ⇨ 1800Ω=1.8kΩ
有効数字につづく 0 の数を表わす。
2 桁の有効数字を表わす。

1R 2 ⇨ 1.2Ω
1 桁の有効数字を表わす。
2 桁の有効数字で小数点は R で表わす。

：単位はΩ

## ●コンデンサ

例) CE 種類 / 04W 形状特性 / 1H 耐圧 / 2R2 容量 / M 許容差 / BP その他

| | | | |
|---|---|---|---|
| CE ： アルミ箔電解 | 0J ： 6.3 V | F ： ±1% | HS ： 高安定形 |
| CA ： アルミ固体電解 | 1A ： 10 V | G ： ±2% | BP ： 無極性形 |
| CS ： タンタル電解 | 1C ： 16 V | J ： ±5% | HR ： 耐リップル形 |
| CQ ： フィルム | 1E ： 25 V | K ： ±10% | DL ： 充放電対策用 |
| CK ： セラミック | 1V ： 35 V | M ： ±20% | HF ： 高周波保証用 |
| CC ： セラミック | 1H ： 50 V | Z ： +80% | U ： UL 部品 |
| CP ： オイル | 2A ： 100 V | –20% | C ： CSA 部品 |
| CM ： マイカ | 2B ： 125 V | P ： +100% | W ： UL-CSA 部品 |
| CF ： メタライズド | 2C ： 160 V | – 0% | F ： リード線成形 |
| CH ： メタライズド | 2D ： 200 V | C ： ±0.25pF | |
| | 2E ： 250 V | D ： ±0.5pF | |
| | 2H ： 500 V | = ： その他 | |
| | 2J ： 630 V | | |

＊容量値

● 電解コンデンサの場合

22 2 ⇨ 2200μF
有効数字につづく 0 の数を表わす。
2 桁の有効数字を表わす。
：単位はμF

2R 2 ⇨ 2.2μF
1 桁の有効数字を表わす。
2 桁の有効数字で小数点は R で表わす。
：単位はμF

● 電解コンデンサ以外の場合

22 2 ⇨ 2200pF=0.0022μF
有効数字につづく 0 の数を表わす。
(0 の数が 2 以上の場合)
2 桁の有効数字を表わす。
：単位はpF

22 1 ⇨ 220pF
有効数字につづく 0 の数を表わす。
(0 の数が 0 または 1 の場合)
2 桁の有効数字を表わす。
：単位はpF

● 耐圧を交流で表示する場合は、耐圧表示の次に「AC」を表示します。

# PARTS LIST OF P.W.B. UNIT (for E3 model)

＊本表に記載されている部品は、補修用部品のため製品に使用している部品とは一部、形状、寸法などが異なる場合があります。
＊ The parts listed below are for maintenance only, might differ from the parts used in the unit in appearances or dimensions.

＊ "nsp" 印の部品は常時在庫していませんので供給に長時間を要することがあります。場合によっては、供給をお断りする場合があります。
＊ Part indicated with the mark “nsp” are not always in stock and possibly to take a long period of time for supplying, or in some case supplying of part may be refused.

## 00DGU-3749 MAIN/A.VIDEO P.W.B. UNIT ASS'Y

| | Ref. No. | nsp | Part No. | Part Name | Remarks | Q'ty | New |
|---|---|---|---|---|---|---|---|
| **SEMICONDUCTORS GROUP** | | | | | | | |
| | IC101 | | 00D 262 2977 917 | BA25BC0FP-E2 | | | |
| | IC102 | | 00D 263 1205 900 | PQ012FZ01ZP +C | | | |
| | IC151 | | 00D 262 3591 907 | BD7956FS-E2 | | | |
| | IC152 | | 00D GEN 8103 | EEPROM ROM SUB ASSY | BR24L32F-WE2 +C | | |
| | IC153 | | 00D 262 3082 924 | BD4730G-TR | | | |
| | IC154 | | 00D 262 3216 907 | SM8707EV +C | | | |
| | IC155 | | 00D GEN 8284 | FE/BE ROM SUB ASSY | MX29LV320CBTC-70G | | |
| | IC156 | | 00D 262 3594 001 | EM638165TS-7G | | | |
| | IC157 | | 00D 262 3592 003 | MN2DS0009AA | | | |
| | IC158 | | 00D 262 3594 001 | EM638165TS-7G | | | |
| | IC159 | | 00D 262 2517 908 | SN74LV08APW-EL2 +REF | | | |
| | IC161 | | 00D 262 3601 907 | TC7WH157FU(TE12L,F) | | | |
| | IC162 | | 00D 263 0989 900 | NJM2904M-TE1 +C | | | |
| | IC301 | | 00D 263 0673 902 | BA10393F-E2 +C | | | |
| | IC400 | | 00D 262 2514 901 | SN74LV138APW-EL2 +C | | | |
| | IC401 | | 00D 262 3217 003 | CXD2753R +C | | | |
| | IC402 | | 00D 262 2641 900 | SN74LV541APW-EL2 +C | | | |
| | IC403-406 | | 00D 262 3242 900 | SN74LV273APW-EL2 +REF | | | |
| | IC408 | | 00D 262 2641 900 | SN74LV541APW-EL2 +C | | | |
| | IC409 | | 00D 262 2875 006 | 16M SDRAM(TSOP)-7/8 +C | | | |
| | IC410,411 | | 00D 262 2669 908 | SN74LV157APW +C | | | |
| | IC412-414 | | 00D 262 2517 908 | SN74LV08APW-EL2 +REF | | | |
| | IC500 | | 00D 262 2977 917 | BA25BC0FP-E2 | | | |
| | IC501 | | 00D 262 3481 004 | ADV7324 | | | |
| | IC502 | | 00D 262 3595 903 | SN74LV594APWR | | | |
| | IC503 | | 00D 262 3277 904 | SN74LVC157APW-EL2 +C | | | |
| | IC505 | | 00D 262 3365 900 | BH7868FS | | | |
| | IC550 | | 00D 262 3481 004 | ADV7324 | | | |
| | TR150 | | 00D 272 0160 901 | 2SB1132T100Q +C | | | |
| | TR153 | | 00D 272 0160 901 | 2SB1132T100Q +C | | | |
| | TR154,155 | | 00D 273 0487 904 | 2SC2412K_T146R | | | |
| | TR156 | | 00D 269 0082 902 | DTC114EKT96 +C | | | |
| | TR157 | | 00D 275 0109 903 | 2SK3019-TL | | | |
| | TR158 | | 00D 269 0082 902 | DTC114EKT96 +C | | | |
| | TR159 | | 00D 271 0259 903 | 2SA1162-GR(TE85L) | | | |
| | TR160 | | 00D 269 0082 902 | DTC114EKT96 +C | | | |
| | TR161 | | 00D 273 0487 904 | 2SC2412K_T146R | | | |
| | TR162 | | 00D 275 0109 903 | 2SK3019-TL | | | |
| | TR163 | | 00D 273 0487 904 | 2SC2412K_T146R | | | |
| | TR164,165 | | 00D 275 0109 903 | 2SK3019-TL | | | |
| | TR166,167 | | 00D 269 0229 901 | DTC143TUAT106 | | | |
| | TR302 | | 00D 273 0460 905 | KTC2875B-RTK +C | | | |
| | TR502-504 | | 00D 271 0293 901 | 2SA1022-B +C | | | |
| | TR553,554 | | 00D 271 0293 901 | 2SA1022-B +C | | | |
| | D101,102 | | 00D 276 0401 905 | 1SS133T77 (TAPE) | | | |
| | D152 | | 00D 276 0401 905 | 1SS133T77 (TAPE) | | | |
| | D500 | | 00D 276 0717 903 | 1SS355 TE-17 +C | | | |

| | Ref. No. | nsp | Part No. | Part Name | Remarks | Q'ty | New |
|---|---|---|---|---|---|---|---|
| **RESISTORS GROUP** | | | | | | | |
| | R151 | | 00D 244 2051 945 | RS14B3A010JNBST(S) | | | |
| | RR301 | | 00D 247 2020 933 | RM73B--103FT +1608 | | | |
| | RR303 | | 00D 247 2020 933 | RM73B--103FT +1608 | | | |
| | RR304 | | 00D 247 2028 906 | RM73B--302FT +1608 | | | |
| | RR316 | | 00D 247 2021 903 | RM73B--122FT +1608 | | | |
| | RR318-320 | | 00D 247 2021 903 | RM73B--122FT +1608 | | | |
| | RA500-506 | | 00D 247 9002 909 | MNR14=330JE0AB +C | | | |
| | RA507,508 | | 00D 247 9007 920 | MNR14=0R0JE0 | | | |
| | RA550-556 | | 00D 247 9002 909 | MNR14=330JE0AB +C | | | |
| | VR501 | | 00D 211 6148 906 | V03PB471MT(RH03ADCS) +REF | | | |
| | VR551 | | 00D 211 6148 906 | V03PB471MT(RH03ADCS) +REF | | | |
| | | | | | | | |
| **CAPACITORS GROUP** | | | | | | | |
| | C101 | nsp | 00D 257 0512 903 | CK73F1E104ZT +1608 | | | |
| | C102 | nsp | 00D 254 4533 921 | CE04W0J101MT SMG/RE3 | | | |
| | C103 | nsp | 00D 257 0511 904 | CK73F1H103ZT +1608 | | | |
| | C104 | nsp | 00D 257 0512 903 | CK73F1E104ZT +1608 | | | |
| | C105,106 | nsp | 00D 254 4533 921 | CE04W0J101MT SMG/RE3 | | | |
| | C107 | nsp | 00D 257 0512 903 | CK73F1E104ZT +1608 | | | |
| | C108 | nsp | 00D 257 0511 904 | CK73F1H103ZT +1608 | | | |
| | C109 | nsp | 00D 257 0512 903 | CK73F1E104ZT +1608 | | | |
| | C111 | | 00D 257 4012 917 | CE67C1C220MT (RV2) +REF | | | |
| | C112 | nsp | 00D 257 0512 903 | CK73F1E104ZT +1608 | | | |
| | C113 | | 00D 257 4011 905 | CE67C0J101MT (RV2) +REF | | | |
| | C114 | | 00D 257 2015 929 | CS77B1A220MT | | | |
| | C115 | | 00D 257 4011 905 | CE67C0J101MT (RV2) +REF | | | |
| | C116 | nsp | 00D 257 0507 976 | CC73CH1H331JT +1608 | | | |
| | C117 | | 00D 257 2015 929 | CS77B1A220MT | | | |
| | C118 | nsp | 00D 257 0512 903 | CK73F1E104ZT +1608 | | | |
| | C119,120 | | 00D 257 4011 905 | CE67C0J101MT (RV2) +REF | | | |
| | C121 | nsp | 00D 257 0512 903 | CK73F1E104ZT +1608 | | | |
| | C122 | | 00D 257 4012 917 | CE67C1C220MT (RV2) +REF | | | |
| | C123 | nsp | 00D 257 0512 903 | CK73F1E104ZT +1608 | | | |
| | C124,125 | | 00D 257 4011 905 | CE67C0J101MT (RV2) +REF | | | |
| | C126,127 | nsp | 00D 257 0512 903 | CK73F1E104ZT +1608 | | | |
| | C136,137 | nsp | 00D 257 0511 904 | CK73F1H103ZT +1608 | | | |
| | C138 | | 00D 257 4011 905 | CE67C0J101MT (RV2) +REF | | | |
| | C139,140 | nsp | 00D 257 0512 903 | CK73F1E104ZT +1608 | | | |
| | C141 | nsp | 00D 257 0511 904 | CK73F1H103ZT +1608 | | | |
| | C148,149 | | 00D 257 2017 901 | CS77B0J101MT(SK8) | | | |
| | C150 | nsp | 00D 257 0512 903 | CK73F1E104ZT +1608 | | | |
| | C151 | | 00D 257 4012 933 | CE67C1C101MT (RV2) +REF | | | |
| | C152 | | 00D 257 4012 920 | CE67C1C470MT (RV2) +REF | | | |
| | C155 | nsp | 00D 257 0512 903 | CK73F1E104ZT +1608 | | | |
| | C156,157 | | 00D 257 4012 917 | CE67C1C220MT (RV2) +REF | | | |
| | C160 | | 00D 257 4012 920 | CE67C1C470MT (RV2) +REF | | | |
| | C163 | nsp | 00D 257 0508 917 | CC73CH1H471JT +1608 | | | |
| | C164 | | 00D 257 4012 917 | CE67C1C220MT (RV2) +REF | | | |
| | C165 | nsp | 00D 257 0512 903 | CK73F1E104ZT +1608 | | | |
| | C166 | | 00D 257 4012 920 | CE67C1C470MT (RV2) +REF | | | |
| | C167 | nsp | 00D 257 0512 903 | CK73F1E104ZT +1608 | | | |
| | C170 | | 00D 257 4012 920 | CE67C1C470MT (RV2) +REF | | | |

| Ref. No. | nsp | Part No. | Part Name | Remarks | Q'ty | New |
|---|---|---|---|---|---|---|
| C171 | | 00D 257 4012 917 | CE67C1C220MT (RV2) +REF | | | |
| C172 | nsp | 00D 257 0501 901 | CK73B1H103KT (1608) +1608 | | | |
| C174 | | 00D 257 4012 917 | CE67C1C220MT (RV2) +REF | | | |
| C175 | nsp | 00D 257 0512 903 | CK73F1E104ZT +1608 | | | |
| C176 | | 00D 257 4012 917 | CE67C1C220MT (RV2) +REF | | | |
| C177 | nsp | 00D 257 0516 954 | CK73B1E104KT +1608 | | | |
| C178 | nsp | 00D 257 0520 908 | CK73B1A154KT +1608 | | | |
| C179 | nsp | 00D 257 0516 954 | CK73B1E104KT +1608 | | | |
| C180 | nsp | 00D 257 0516 925 | CK73B1E333KT +1608 | | | |
| C181 | nsp | 00D 257 0512 903 | CK73F1E104ZT +1608 | | | |
| C182 | nsp | 00D 257 0506 951 | CC73CH1H101JT +1608 | | | |
| C183 | nsp | 00D 257 0501 930 | CK73B1H183KT | | | |
| C184,185 | nsp | 00D 257 0512 903 | CK73F1E104ZT +1608 | | | |
| C186 | nsp | 00D 257 0521 907 | CK73B1A105KT +1608 | | | |
| C187-189 | nsp | 00D 257 0512 903 | CK73F1E104ZT +1608 | | | |
| C190 | | 00D 254 4655 922 | CE67C0J470MT (RV2) +REF | | | |
| C191-195 | nsp | 00D 257 0512 903 | CK73F1E104ZT +1608 | | | |
| C196 | | 00D 257 2017 901 | CS77B0J101MT(SK8) | | | |
| C197 | nsp | 00D 257 0516 954 | CK73B1E104KT +1608 | | | |
| C198,199 | nsp | 00D 257 0511 904 | CK73F1H103ZT +1608 | | | |
| C200 | nsp | 00D 257 0512 903 | CK73F1E104ZT +1608 | | | |
| C201,202 | nsp | 00D 257 0516 954 | CK73B1E104KT +1608 | | | |
| C203 | | 00D 257 4011 905 | CE67C0J101MT (RV2) +REF | | | |
| C204 | nsp | 00D 257 0516 954 | CK73B1E104KT +1608 | | | |
| C205-207 | nsp | 00D 257 0512 903 | CK73F1E104ZT +1608 | | | |
| C208 | | 00D 257 4011 905 | CE67C0J101MT (RV2) +REF | | | |
| C209 | nsp | 00D 257 0516 954 | CK73B1E104KT +1608 | | | |
| C210 | nsp | 00D 257 0520 911 | CK73B1A224KT +1608 | | | |
| C211 | nsp | 00D 257 0512 903 | CK73F1E104ZT +1608 | | | |
| C212,213 | nsp | 00D 257 0506 951 | CC73CH1H101JT +1608 | | | |
| C214 | | 00D 257 4011 905 | CE67C0J101MT (RV2) +REF | | | |
| C215,216 | nsp | 00D 257 0512 903 | CK73F1E104ZT +1608 | | | |
| C217 | nsp | 00D 257 0509 929 | CK73B1H102KT +1608 | | | |
| C218-220 | nsp | 00D 257 0512 903 | CK73F1E104ZT +1608 | | | |
| C221 | nsp | 00D 257 0511 904 | CK73F1H103ZT +1608 | | | |
| C222 | nsp | 00D 257 0503 967 | CC73CH1H150JT +1608 | | | |
| C223-225 | nsp | 00D 257 0512 903 | CK73F1E104ZT +1608 | | | |
| C227 | nsp | 00D 257 0503 967 | CC73CH1H150JT +1608 | | | |
| C228 | nsp | 00D 257 0512 903 | CK73F1E104ZT +1608 | | | |
| C229 | nsp | 00D 257 0511 904 | CK73F1H103ZT +1608 | | | |
| C230-232 | nsp | 00D 257 0512 903 | CK73F1E104ZT +1608 | | | |
| C236,237 | nsp | 00D 257 0512 903 | CK73F1E104ZT +1608 | | | |
| C238,239 | nsp | 00D 257 0509 929 | CK73B1H102KT +1608 | | | |
| C240 | nsp | 00D 257 0512 903 | CK73F1E104ZT +1608 | | | |
| C241 | nsp | 00D 257 0509 929 | CK73B1H102KT +1608 | | | |
| C242-250 | nsp | 00D 257 0512 903 | CK73F1E104ZT +1608 | | | |
| C251 | | 00D 257 4011 905 | CE67C0J101MT (RV2) +REF | | | |
| C252-256 | nsp | 00D 257 0512 903 | CK73F1E104ZT +1608 | | | |
| C257 | nsp | 00D 257 0506 951 | CC73CH1H101JT +1608 | | | |
| C258 | nsp | 00D 257 0512 903 | CK73F1E104ZT +1608 | | | |
| C259 | nsp | 00D 257 0506 951 | CC73CH1H101JT +1608 | | | |
| C260,261 | nsp | 00D 257 0512 903 | CK73F1E104ZT +1608 | | | |
| C262 | | 00D 257 4011 905 | CE67C0J101MT (RV2) +REF | | | |
| C264-266 | nsp | 00D 257 0520 911 | CK73B1A224KT +1608 | | | |
| C267 | nsp | 00D 257 0516 954 | CK73B1E104KT +1608 | | | |
| C268 | | 00D 257 4011 905 | CE67C0J101MT (RV2) +REF | | | |
| C269-272 | nsp | 00D 257 0512 903 | CK73F1E104ZT +1608 | | | |

| | Ref. No. | nsp | Part No. | Part Name | Remarks | Q'ty | New |
|---|---|---|---|---|---|---|---|
| | C273 | | 00D 257 4011 905 | CE67C0J101MT (RV2) +REF | | | |
| | C274-277 | nsp | 00D 257 0512 903 | CK73F1E104ZT +1608 | | | |
| | C281 | nsp | 00D 257 0512 903 | CK73F1E104ZT +1608 | | | |
| | C282 | nsp | 00D 257 0516 954 | CK73B1E104KT +1608 | | | |
| | C305 | nsp | 00D 257 0512 903 | CK73F1E104ZT +1608 | | | |
| | C396 | nsp | 00D 257 0509 929 | CK73B1H102KT +1608 | | | |
| | C397 | nsp | 00D 257 0512 903 | CK73F1E104ZT +1608 | | | |
| | C398 | nsp | 00D 257 0509 929 | CK73B1H102KT +1608 | | | |
| | C399 | nsp | 00D 257 0512 903 | CK73F1E104ZT +1608 | | | |
| | C405 | nsp | 00D 257 0512 903 | CK73F1E104ZT +1608 | | | |
| | C406 | nsp | 00D 257 0509 929 | CK73B1H102KT +1608 | | | |
| | C407-411 | nsp | 00D 257 0512 903 | CK73F1E104ZT +1608 | | | |
| | C412 | | 00D 257 4012 917 | CE67C1C220MT (RV2) +REF | | | |
| | C414 | nsp | 00D 257 0512 903 | CK73F1E104ZT +1608 | | | |
| | C415 | nsp | 00D 257 0511 904 | CK73F1H103ZT +1608 | | | |
| | C417 | nsp | 00D 257 0503 925 | CC73CH1H100DT +1608 | | | |
| | C418 | nsp | 00D 257 0501 901 | CK73B1H103KT (1608) +1608 | | | |
| | C419-421 | nsp | 00D 257 0512 903 | CK73F1E104ZT +1608 | | | |
| | C422,423 | nsp | 00D 257 0511 904 | CK73F1H103ZT +1608 | | | |
| | C424 | nsp | 00D 257 0512 903 | CK73F1E104ZT +1608 | | | |
| | C425 | nsp | 00D 257 0509 929 | CK73B1H102KT +1608 | | | |
| | C426,427 | nsp | 00D 257 0512 903 | CK73F1E104ZT +1608 | | | |
| | C428 | nsp | 00D 257 0509 929 | CK73B1H102KT +1608 | | | |
| | C429,430 | nsp | 00D 257 0512 903 | CK73F1E104ZT +1608 | | | |
| | C431 | | 00D 257 4011 905 | CE67C0J101MT (RV2) +REF | | | |
| | C432-438 | nsp | 00D 257 0512 903 | CK73F1E104ZT +1608 | | | |
| | C439 | | 00D 257 4011 905 | CE67C0J101MT (RV2) +REF | | | |
| | C440 | nsp | 00D 257 0511 904 | CK73F1H103ZT +1608 | | | |
| | C441 | nsp | 00D 257 0512 903 | CK73F1E104ZT +1608 | | | |
| | C442 | nsp | 00D 257 0509 929 | CK73B1H102KT +1608 | | | |
| | C443 | nsp | 00D 257 0512 903 | CK73F1E104ZT +1608 | | | |
| | C444 | nsp | 00D 257 0511 904 | CK73F1H103ZT +1608 | | | |
| | C445,446 | nsp | 00D 257 0512 903 | CK73F1E104ZT +1608 | | | |
| | C447 | nsp | 00D 257 0509 929 | CK73B1H102KT +1608 | | | |
| | C448 | nsp | 00D 257 0511 904 | CK73F1H103ZT +1608 | | | |
| | C449-454 | nsp | 00D 257 0512 903 | CK73F1E104ZT +1608 | | | |
| | C455 | | 00D 257 4011 905 | CE67C0J101MT (RV2) +REF | | | |
| | C477-479 | nsp | 00D 257 0512 903 | CK73F1E104ZT +1608 | | | |
| | C480 | nsp | 00D 257 0511 904 | CK73F1H103ZT +1608 | | | |
| | C481 | nsp | 00D 257 0512 903 | CK73F1E104ZT +1608 | | | |
| | C482 | nsp | 00D 257 0511 904 | CK73F1H103ZT +1608 | | | |
| | C483-488 | nsp | 00D 257 0512 903 | CK73F1E104ZT +1608 | | | |
| | C500,501 | nsp | 00D 257 0509 929 | CK73B1H102KT +1608 | | | |
| | C502-504 | nsp | 00D 257 0512 903 | CK73F1E104ZT +1608 | | | |
| | C505 | nsp | 00D 257 0501 901 | CK73B1H103KT (1608) +1608 | | | |
| | C506 | nsp | 00D 257 0512 903 | CK73F1E104ZT +1608 | | | |
| | C507,508 | nsp | 00D 257 0506 951 | CC73CH1H101JT +1608 | | | |
| | C509 | nsp | 00D 257 0512 903 | CK73F1E104ZT +1608 | | | |
| | C511 | nsp | 00D 257 0501 901 | CK73B1H103KT (1608) +1608 | | | |
| | C512-514 | nsp | 00D 257 0512 903 | CK73F1E104ZT +1608 | | | |
| | C516 | nsp | 00D 257 0512 903 | CK73F1E104ZT +1608 | | | |
| | C517 | nsp | 00D 257 0509 903 | CK73B1H821KT +1608 | | | |
| | C518 | nsp | 00D 257 0510 921 | CK73B1H392KT +1608 | | | |
| | C519-525 | nsp | 00D 257 0512 903 | CK73F1E104ZT +1608 | | | |
| | C526,527 | nsp | 00D 257 0501 901 | CK73B1H103KT (1608) +1608 | | | |
| | C528 | nsp | 00D 257 0516 954 | CK73B1E104KT +1608 | | | |
| | C530-533 | nsp | 00D 257 0501 901 | CK73B1H103KT (1608) +1608 | | | |

| | Ref. No. | nsp | Part No. | Part Name | Remarks | Q'ty | New |
|---|---|---|---|---|---|---|---|
| | C534 | nsp | 00D 257 0516 954 | CK73B1E104KT +1608 | | | |
| | C536 | nsp | 00D 257 0512 903 | CK73F1E104ZT +1608 | | | |
| | C553,554 | nsp | 00D 257 0512 903 | CK73F1E104ZT +1608 | | | |
| | C556 | nsp | 00D 257 0512 903 | CK73F1E104ZT +1608 | | | |
| | C600,601 | nsp | 00D 257 0512 903 | CK73F1E104ZT +1608 | | | |
| | C605 | nsp | 00D 257 0501 901 | CK73B1H103KT (1608) +1608 | | | |
| | C606,607 | nsp | 00D 257 0512 903 | CK73F1E104ZT +1608 | | | |
| | C609 | nsp | 00D 257 0509 903 | CK73B1H821KT +1608 | | | |
| | C610 | nsp | 00D 257 0512 903 | CK73F1E104ZT +1608 | | | |
| | C611 | nsp | 00D 257 0510 921 | CK73B1H392KT +1608 | | | |
| | C615,616 | nsp | 00D 257 0512 903 | CK73F1E104ZT +1608 | | | |
| | C624 | nsp | 00D 257 0512 903 | CK73F1E104ZT +1608 | | | |
| | C672,673 | nsp | 00D 257 0512 903 | CK73F1E104ZT +1608 | | | |
| | C676 | nsp | 00D 257 0512 903 | CK73F1E104ZT +1608 | | | |
| | C696 | nsp | 00D 257 0512 903 | CK73F1E104ZT +1608 | | | |
| | C900 | | 00D 254 4655 922 | CE67C0J470MT (RV2) +REF | | | |
| | C901 | | 00D 257 2015 929 | CS77B1A220MT | | | |
| | C902-906 | | 00D 257 4011 905 | CE67C0J101MT (RV2) +REF | | | |
| | C907 | | 00D 254 4660 946 | CE67C1H010MT (RV2B55 +REF | | | |
| | C908 | | 00D 254 4655 922 | CE67C0J470MT (RV2) +REF | | | |
| | C909 | | 00D 257 4011 905 | CE67C0J101MT (RV2) +REF | | | |
| | C910 | | 00D 254 4660 946 | CE67C1H010MT (RV2B55 +REF | | | |
| | C911 | | 00D 254 4655 922 | CE67C0J470MT (RV2) +REF | | | |
| | C912 | | 00D 257 4012 917 | CE67C1C220MT (RV2) +REF | | | |
| | C913 | | 00D 254 4655 977 | CE67C0J102MT (RV) +REF | | | |
| | C914 | | 00D 257 4011 905 | CE67C0J101MT (RV2) +REF | | | |
| | C915 | | 00D 254 4655 977 | CE67C0J102MT (RV) +REF | | | |
| | C916 | | 00D 257 4011 905 | CE67C0J101MT (RV2) +REF | | | |
| | C917 | | 00D 254 4655 977 | CE67C0J102MT (RV) +REF | | | |
| | C918 | | 00D 257 4011 905 | CE67C0J101MT (RV2) +REF | | | |
| | C920 | | 00D 257 4012 917 | CE67C1C220MT (RV2) +REF | | | |
| | C921 | | 00D 257 4011 905 | CE67C0J101MT (RV2) +REF | | | |
| | C922 | | 00D 257 4012 917 | CE67C1C220MT (RV2) +REF | | | |
| | C928 | | 00D 257 4011 905 | CE67C0J101MT (RV2) +REF | | | |
| | C930-933 | | 00D 257 4011 905 | CE67C0J101MT (RV2) +REF | | | |
| | C984,985 | | 00D 257 4012 917 | CE67C1C220MT (RV2) +REF | | | |
| | C986,987 | nsp | 00D 257 0512 903 | CK73F1E104ZT +1608 | | | |
| | C988 | | 00D 257 4012 917 | CE67C1C220MT (RV2) +REF | | | |
| | C990-992 | nsp | 00D 257 0512 903 | CK73F1E104ZT +1608 | | | |
| | | | | | | | |
| **OTHERS PARTS GROUP** | | | | | | | |
| | AS601,602 | | - | M3-SCREW-TERMINAL08R | | | |
| | CX053 | nsp | 00D 205 0355 059 | 5P KR CON BASE(L) | | | |
| | CX062 | nsp | 00D 205 1323 064 | 6P PIN HEADER(9120) | | | |
| | CX122 | nsp | 00D 205 1386 085 | 12P BASE(9115B-PT1) | | | |
| | CX125 | nsp | 00D 205 1386 085 | 12P BASE(9115B-PT1) | | | |
| | CX151 | nsp | 00D 205 1224 930 | 15P FFC BASE(9616A) | | | |
| | CX161 | nsp | 00D 205 1324 063 | 16P PIN HEADER(9120) | | | |
| | CX211 | nsp | 00D 205 1346 009 | 21P 1.25FJ CONN.BASE | | | |
| | CX212 | nsp | 00D 205 1334 011 | 21P-FFC-BASE(9615A) | | | |
| | CX241 | nsp | 00D 205 1264 916 | 24P-FFC-BASE(9631SG) | | | |
| | CX331 | nsp | 00D 205 1334 008 | 33P-FFC-BASE (P=1) | | | |
| | | | | | | | |
| | CY062 | nsp | 00D 205 1325 062 | 6P SOCKET(9120) | | | |
| | CY071 | nsp | 00D 205 0355 075 | 7P KR CON BASE(L) | | | |

| | Ref. No. | nsp | Part No. | Part Name | Remarks | Q'ty | New |
|---|---|---|---|---|---|---|---|
| | CY123 | nsp | 00D 205 1324 021 | 12P PIN HEADER(9120) | | | |
| | CY132 | nsp | 00D 205 0480 034 | 13P KR CON BASE(L) | | | |
| | CY162 | nsp | 00D 205 1324 063 | 16P PIN HEADER(9120) | | | |
| | CY211 | | 00D 205 1345 000 | 21P 1.25FJ CONN.PLUG | | | |
| | FB101 | | 00D 235 0136 907 | FBMJ1608HS280NT +1608 | | | |
| | FB103-107 | | 00D 235 0136 907 | FBMJ1608HS280NT +1608 | | | |
| | FB150 | | 00D 235 0130 903 | CHIP EMIFIL(11A121) +1608 | | | |
| | FB155,156 | | 00D 235 0130 903 | CHIP EMIFIL(11A121) +1608 | | | |
| | FB159-161 | nsp | 00D 247 2018 903 | RM73B--0R0KT +1608 | | | |
| | JK703 | | 00D 205 1395 005 | 1P S-TERMINAL-LF | | | |
| | JK705-708 | | 00D 204 8728 009 | 1P PIN JACK(BK)-LF | | | |
| | JK853 | | 00D 205 1332 000 | 3P BNC CONNECTOR(AU) | | | |
| | L150 | | 00D 235 0125 905 | INDUCTOR(FLC32C220K)+3216 | | | |
| | L154-156 | | 00D 235 0074 933 | INDUCTOR(101)ST | | | |
| | L157,158 | | 00D 235 0125 905 | INDUCTOR(FLC32C220K)+3216 | | | |
| | L502-504 | | 00D 235 0125 905 | INDUCTOR(FLC32C220K)+3216 | | | |
| | L552,553 | | 00D 235 0125 905 | INDUCTOR(FLC32C220K)+3216 | | | |
| | X150 | | 00D 399 0596 003 | XTAL(27MHZ) | | | |

## 00DGU-3750 POWER/DISPLAY P.W.B. UNIT ASS'Y

| | Ref. No. | nsp | Part No. | Part Name | Remarks | Q'ty | New |
|---|---|---|---|---|---|---|---|
| **SEMICONDUCTORS GROUP** | | | | | | | |
| | IC101 | | 00D 262 3606 902 | PT6302-R-001(L) | | | |
| | IC102 | | 00D 262 3602 003 | GP1UE271XKVF | | | |
| | IC108 | | 00D 269 0222 005 | GP1FA52HTZ0F | | | |
| | IC901 | | 00D 265 0126 002 | TOP247YN | | | |
| | IC902 | | 00D 263 1256 904 | TA76432S(TPE6,F) | | | |
| | IC903 | | 00D 263 1100 005 | KIA7805API | | | |
| | IC904 | | 00D 262 2580 906 | CXA1511M +C | | | |
| | IC905 | | 00D 262 2114 903 | UPD4721GS-GJG +C | | | |
| | IC906 | | 00D 262 3047 008 | PC123Y22 | | | |
| | IC907,908 | | 00D 263 1256 904 | TA76432S(TPE6,F) | | | |
| | IC909 | | 00D 262 3277 904 | SN74LVC157APW-EL2 +C | | | |
| | IC910 | | 00D 263 1100 021 | KIA7812API | | | |
| | TR101,102 | | 00D 269 0082 902 | DTC114EKT96 +C | | | |
| | TR103,104 | | 00D 271 0308 906 | 2SA933ASTPS | | | |
| | TR105-111 | | 00D 269 0082 902 | DTC114EKT96 +C | | | |
| | TR121 | | 00D 273 0487 904 | 2SC2412K_T146R | | | |
| | TR901 | | 00D 271 0308 906 | 2SA933ASTPS | | | |
| | TR902 | | 00D 272 0170 001 | 2SB1268(R/S) | | | |
| | TR904 | | 00D 272 0083 004 | 2SB1185(E/F) | | | |
| | TR905 | | 00D 274 0036 905 | 2SD468(C)TF | | | |
| | TR907 | | 00D 269 0083 901 | DTA114EKT96 +C | | | |
| | TR908,909 | | 00D 269 0082 902 | DTC114EKT96 +C | | | |
| | TR910 | | 00D 275 0115 900 | RSS100N03TB | | | |
| | TR911 | | 00D 269 0055 900 | DTA144EKT96 +C | | | |
| | TR912 | | 00D 269 0054 901 | DTC144EKT96 +C | | | |
| | TR913,914 | | 00D 274 0209 004 | 2SC5370 | | | |
| | TR915,916 | | 00D 271 0308 906 | 2SA933ASTPS | | | |
| | TR917 | | 00D 273 0303 910 | 2SC1740S(S)-T | | | |
| | D101-109 | | 00D 276 0401 905 | 1SS133T77 (TAPE) | | | |
| | D901-904 | | 00D 276 0729 904 | EM01AT (V1) | | | |
| | D906 | | 00D 276 0401 905 | 1SS133T77 (TAPE) | | | |
| | D907 | | 00D 276 0813 001 | AP01C | | | |
| | D908 | | 00D 276 0818 006 | FMJ-2303 | | | |
| | D909 | | 00D 276 0401 905 | 1SS133T77 (TAPE) | | | |
| | D910 | | 00D 276 0803 008 | FMB-G19L | | | |
| | D911 | | 00D 276 0730 906 | AG01ZT (V1) | | | |
| | D914 | | 00D 276 0730 906 | AG01ZT (V1) | | | |
| | D915 | | 00D 276 0401 905 | 1SS133T77 (TAPE) | | | |
| | D921 | | 00D 276 0401 905 | 1SS133T77 (TAPE) | | | |
| | D922 | | 00D 276 0842 904 | RB551V-30TE-17 | | | * |
| | D923-925 | | 00D 276 0401 905 | 1SS133T77 (TAPE) | | | |
| | D926 | | 00D 276 0730 906 | AG01ZT (V1) | | | |
| | ZD903 | | 00D 276 0762 945 | MTZJ36B T77 | | | |
| | ZD904 | | 00D 276 0760 921 | MTZJ4.3B T77 | | | |
| | ZD905 | | 00D 276 0760 947 | MTZJ5.1B T77 | | | |
| | LD101,102 | | 00D 393 9576 903 | SELU1E10CXM-002 | | | |
| | LD103 | | 00D 393 9645 009 | SML1216W(D) | | | |
| | LD104,105 | | 00D 393 9576 903 | SELU1E10CXM-002 | | | |
| | LD106-108 | | 00D 393 9452 904 | SEL1410E(TP2) | | | |

| | Ref. No. | nsp | Part No. | Part Name | Remarks | Q'ty | New |
|---|---|---|---|---|---|---|---|
| | TH901 | | 00D 279 0044 002 | NTH11D8R0LA | | | |
| | FL101 | | 00D 393 8078 004 | FL TUBE(15-BT-97GNK) | | | |
| **RESISTORS GROUP** | | | | | | | |
| | R908 | | 00D 244 2675 729 | RS14B3D224JNBF (ERG) | | | |
| | R916 | | 00D 247 2023 914 | RM73B--103DT(1608) +1608 | | | |
| | R917 | | 00D 247 2023 927 | RM73B--1652DT(1608) +1608 | | | |
| | R918 | | 00D 244 2055 912 | RS14B3AR47JNBST(S) | | | |
| | R919 | | 00D 244 2681 904 | RS14B3A1R5JNBST(S) | | | |
| | R926 | | 00D 244 2052 973 | RS14B3A561JNBST(S) | | | |
| | R929 | | 00D 244 2050 991 | RS14B3A682JNBST(S) | | | |
| | R930 | | 00D 244 2052 973 | RS14B3A561JNBST(S) | | | |
| | R938 | | 00D 244 2051 929 | RS14B3A821JNBST(S) | | | |
| | R940 | | 00D 241 2315 938 | RD14B2E330GFRST | | | |
| | R955,956 | | 00D 244 2052 973 | RS14B3A561JNBST(S) | | | |
| | R960,961 | | 00D 247 2023 914 | RM73B--103DT(1608) +1608 | | | |
| | R962-964 | | 00D 244 2690 908 | RS14B3A120JNBST(S) | | | |
| | R967 | | 00D 247 2023 930 | RM73B--242DT(1608) +1608 | | | |
| | R968 | | 00D 247 2023 914 | RM73B--103DT(1608) +1608 | | | |
| | R969-974 | | 00D 244 2055 912 | RS14B3AR47JNBST(S) | | | |
| | R982-985 | | 00D 244 2681 904 | RS14B3A1R5JNBST(S) | | | |
| | R988 | | 00D 244 2055 912 | RS14B3AR47JNBST(S) | | | |
| | | | | | | | |
| **CAPACITORS GROUP** | | | | | | | |
| | C101 | nsp | 00D 257 0512 903 | CK73F1E104ZT +1608 | | | |
| | C102 | nsp | 00D 257 0511 904 | CK73F1H103ZT +1608 | | | |
| | C103 | | 00D 254 4300 963 | CE04W0J101MT(SRE) | | | |
| | C104 | nsp | 00D 257 0512 903 | CK73F1E104ZT +1608 | | | |
| | C105 | nsp | 00D 257 0504 966 | CC73CH1H390JT +1608 | | | |
| | C106 | | 00D 254 4300 947 | CE04W0J470MT(SRE) | | | |
| | C107-109 | nsp | 00D 257 0512 903 | CK73F1E104ZT +1608 | | | |
| | C111 | nsp | 00D 257 0511 904 | CK73F1H103ZT +1608 | | | |
| | C121-124 | nsp | 00D 257 0501 901 | CK73B1H103KT (1608) +1608 | | | |
| | C125 | nsp | 00D 257 0511 904 | CK73F1H103ZT +1608 | | | |
| | C126 | nsp | 00D 257 0509 929 | CK73B1H102KT +1608 | | | |
| | C192 | nsp | 00D 254 4538 900 | CE04W1C100MT SMG/RE3 | | | |
| | C194 | nsp | 00D 254 4524 943 | CE04W1H010MT SMG/RE3 | | | |
| | C202 | nsp | 00D 257 0511 904 | CK73F1H103ZT +1608 | | | |
| | C901 | | 00D 256 8038 004 | CF99--2EAC104M | | | |
| | C902,903 | | 00D 253 8029 713 | CK45F2EAC471KC(KX) | | | |
| | C904 | | 00D 254 4588 714 | CE04W2D221MC(KMG) | | | |
| | C905,906 | | 00D 253 8029 713 | CK45F2EAC471KC(KX) | | | |
| | C907 | nsp | 00D 254 4525 913 | CE04W1H470MT SMG/RE3 | | | |
| | C909 | nsp | 00D 254 4525 913 | CE04W1H470MT SMG/RE3 | | | |
| | C910 | | 00D 256 8038 004 | CF99--2EAC104M | | | |
| | C912 | | 00D 253 8029 713 | CK45F2EAC471KC(KX) | | | |
| | C913,914 | | 00D 254 4713 709 | CE04W1E102MC J30(KY) | | | |
| | C916,917 | | 00D 254 4770 700 | CE04W0J562MC(KY)K35 | | | |
| | C918 | | 00D 254 4675 902 | CE04W2A220MT(KMF) | | | |
| | C919 | | 00D 254 4770 700 | CE04W0J562MC(KY)K35 | | | |
| | C920,921 | | 00D 254 4651 900 | CE04W0J331MT(KY)E11 | | | |
| | C922 | | 00D 254 4770 700 | CE04W0J562MC(KY)K35 | | | |
| | C923 | nsp | 00D 254 4538 900 | CE04W1C100MT SMG/RE3 | | | |

| | Ref. No. | nsp | Part No. | Part Name | Remarks | Q'ty | New |
|---|---|---|---|---|---|---|---|
| | C925 | | 00D 254 4536 957 | CE04W1A471MT SMG/RE3 | | | |
| | C926 | | 00D 254 4542 705 | CE04W1E471MC SMG/RE3 | | | |
| | C927 | | 00D 254 4536 957 | CE04W1A471MT SMG/RE3 | | | |
| | C929 | nsp | 00D 254 4538 955 | CE04W1C221MT SMG/RE3 | | | |
| | C930 | nsp | 00D 257 0512 903 | CK73F1E104ZT +1608 | | | |
| | C931 | nsp | 00D 257 0511 920 | CK73F1H473ZT +1608 | | | |
| | C932 | nsp | 00D 254 4538 900 | CE04W1C100MT SMG/RE3 | | | |
| | C935,936 | nsp | 00D 257 0512 903 | CK73F1E104ZT +1608 | | | |
| | C937 | nsp | 00D 254 4538 900 | CE04W1C100MT SMG/RE3 | | | |
| | C938 | nsp | 00D 257 0506 951 | CC73CH1H101JT +1608 | | | |
| | C939 | nsp | 00D 257 0511 904 | CK73F1H103ZT +1608 | | | |
| | C940 | nsp | 00D 254 4538 900 | CE04W1C100MT SMG/RE3 | | | |
| | C941-943 | nsp | 00D 254 4524 901 | CE04W1H0R1MT SMG/RE3 | | | |
| | C944 | nsp | 00D 254 4533 921 | CE04W0J101MT SMG/RE3 | | | |
| | C945 | nsp | 00D 257 0512 903 | CK73F1E104ZT +1608 | | | |
| | C946 | nsp | 00D 254 4538 939 | CE04W1C470MT SMG/RE3 | | | |
| | C947 | nsp | 00D 257 0511 904 | CK73F1H103ZT +1608 | | | |
| | C948 | nsp | 00D 254 4524 943 | CE04W1H010MT SMG/RE3 | | | |
| | C949,950 | nsp | 00D 254 4524 901 | CE04W1H0R1MT SMG/RE3 | | | |
| | C952-954 | nsp | 00D 257 0512 903 | CK73F1E104ZT +1608 | | | |
| | C955 | | 00D 254 4770 700 | CE04W0J562MC(KY)K35 | | | |
| | C956 | nsp | 00D 257 0512 903 | CK73F1E104ZT +1608 | | | |
| | C958 | nsp | 00D 257 0512 903 | CK73F1E104ZT +1608 | | | |
| | C959 | nsp | 00D 257 0511 904 | CK73F1H103ZT +1608 | | | |
| | C960 | nsp | 00D 257 0512 903 | CK73F1E104ZT +1608 | | | |
| | C961 | nsp | 00D 257 0506 951 | CC73CH1H101JT +1608 | | | |
| ⚠ | C962 | | 00D 253 8022 707 | CK45F2EAC103MC | | | |
| | C963 | nsp | 00D 257 0509 929 | CK73B1H102KT +1608 | | | |
| | C964 | nsp | 00D 257 0506 951 | CC73CH1H101JT +1608 | | | |
| | C965 | nsp | 00D 257 0509 929 | CK73B1H102KT +1608 | | | |
| | C966 | nsp | 00D 257 0512 903 | CK73F1E104ZT +1608 | | | |
| | C967 | nsp | 00D 254 4533 921 | CE04W0J101MT SMG/RE3 | | | |
| | C968 | nsp | 00D 257 0511 904 | CK73F1H103ZT +1608 | | | |
| | C969,970 | nsp | 00D 257 0512 903 | CK73F1E104ZT +1608 | | | |
| | C977 | nsp | 00D 257 0512 903 | CK73F1E104ZT +1608 | | | |
| | C978 | nsp | 00D 254 4538 900 | CE04W1C100MT SMG/RE3 | | | |
| | C980 | nsp | 00D 257 0512 903 | CK73F1E104ZT +1608 | | | |
| | C981 | nsp | 00D 254 4538 900 | CE04W1C100MT SMG/RE3 | | | |
| | C982,983 | nsp | 00D 257 0516 954 | CK73B1E104KT +1608 | | | |
| | C984 | nsp | 00D 254 4533 921 | CE04W0J101MT SMG/RE3 | | | |
| | C985 | nsp | 00D 247 2018 903 | RM73B--0R0KT +1608 | | | |
| | C989 | nsp | 00D 257 0512 903 | CK73F1E104ZT +1608 | | | |
| | C990,991 | nsp | 00D 254 4538 900 | CE04W1C100MT SMG/RE3 | | | |
| ⚠ | C999 | | 00D 253 8022 707 | CK45F2EAC103MC | | | |
| | | | | | | | |
| **OTHERS PARTS GROUP** | | | | | | | |
| | AS901,902 | | - | RADIATOR | | | |
| | AS904 | | - | RADIATOR(PUE26) | | | |
| | | | | | | | |
| | CW031 | nsp | 00D 203 5343 057 | 3P PH-SAN CON.CORD | | | |
| | CW038 | nsp | 00D 203 5394 006 | 3P PH-SAN CON.CORD | | | |
| | CW052 | nsp | 00D 203 8549 010 | 5P PH-SAN CON.CORD | | | |
| | CW071 | nsp | 00D 204 3008 025 | 7P PH-SAN CON.CORD | | | |
| | CW132 | nsp | 00D 204 6696 023 | 13P PH-SAN CON.CORD | | | |

| | Ref. No. | nsp | Part No. | Part Name | Remarks | Q'ty | New |
|---|---|---|---|---|---|---|---|
| | CX024 | nsp | 00D 205 0581 001 | 2P VH CONNECTOR BASE | | | |
| | CX025 | nsp | 00D 205 0581 056 | 2P VH CONNECTOR BASE | | | |
| | CX026 | nsp | 00D 205 1093 006 | 2P VH CONNECTOR BASA | | | |
| | CX031 | nsp | 00D 205 0343 032 | 3P CONN.BASE(KR-PH) | | | |
| | CX044 | nsp | 00D 205 0343 045 | 4P CONN.BASE(KR-PH) | | | |
| | CX064 | nsp | 00D 205 0653 065 | 6P VH CONNECTOR BASE | | | |
| | CX122 | nsp | 00D 205 0536 027 | 12P CONNE SOCKET | | | |
| | CX123 | nsp | 00D 205 1326 029 | 12P SOCKET(9120) | | | |
| | CX125 | nsp | 00D 205 0536 027 | 12P CONNE SOCKET | | | |
| | CX128 | nsp | 00D 205 1386 085 | 12P BASE(9115B-PT1) | | | |
| | CX161,162 | nsp | 00D 205 1326 061 | 16P SOCKT(9120) | | | |
| | CY025 | nsp | 00D 205 0581 056 | 2P VH CONNECTOR BASE | | | |
| | CY052 | nsp | 00D 205 0343 058 | 5P CONN.BASE(KR-PH) | | | |
| | CY061 | nsp | 00D 205 0536 030 | 6P CONNE SOCKET | | | |
| | CY122 | nsp | 00D 205 0536 027 | 12P CONNE SOCKET | | | |
| | CY123 | nsp | 00D 205 1326 029 | 12P SOCKET(9120) | | | |
| | CY125 | nsp | 00D 205 0536 027 | 12P CONNE SOCKET | | | |
| | CY128 | nsp | 00D 205 1386 085 | 12P BASE(9115B-PT1) | | | |
| | CY161,162 | nsp | 00D 205 1326 061 | 16P SOCKT(9120) | | | |
| ⚠ | F901 | | 00D 206 1094 037 | FUSE(233)T2AL125V | | | |
| | FF901 | nsp | 00D 202 0040 909 | FUSE CLIP(TAPE) | | | |
| | FH901 | nsp | 00D 202 0040 909 | FUSE CLIP(TAPE) | | | |
| | JK102 | | 00D 204 8728 009 | 1P PIN JACK(BK)-LF | | | |
| | JK901 | | 00D 205 1153 001 | 9P S SUB CONNECTOR | | | |
| | JK902 | | 00D 204 8729 008 | 2P MINI JACK | | | |
| | L901 | | 00D 235 0157 009 | PLA10AN7720R7D2B | | | |
| | L902 | | 00D 235 0142 917 | COIL LHL08TB4R7MT | | | |
| | L904,905 | | 00D 235 0142 917 | COIL LHL08TB4R7MT | | | |
| | RL901 | | 00D 214 0202 009 | RELAY DG1U TV-8 | | | |
| | S101-108 | | 00D 212 5604 910 | TACT SWITCH-TA(ALPS) | | | |
| | S109 | | 00D 212 5611 903 | TACT SWITCH(TAPE H5) | | | |
| | S111 | | 00D 212 5604 910 | TACT SWITCH-TA(ALPS) | | | |
| | S112 | | 00D 212 0525 007 | ROT.ENCODER EC11B20 | | | |
| ⚠ | S999 | | 00D 212 1030 009 | POWER SWITCH (TV-5) | | | |
| ⚠ | T901 | | 00D 233 0686 008 | SW TRANS (100/120) | | | |
| | W101 | | - | 1P LUG-SIN WIRE | | | |
| | W104 | | - | M3-SCREW-TERMINAL08R | | | |
| | W106 | | - | 1P LUG-SIN WIRE | | | |
| | W903,904 | | - | M3-SCREW-TERMINAL08R | | | |
| | W906,907 | | - | 1P SIN CORD ASSY | | | |
| | | nsp | 0RD 471 3303 016 | 3X6 CBS-Z | | | |
| | | nsp | 00D 461 0991 026 | RUBBER SHEET | | | |

## 00DGU-3751 AUDIO P.W.B. UNIT ASS'Y

| | Ref. No. | nsp | Part No. | Part Name | Remarks | Q'ty | New |
|---|---|---|---|---|---|---|---|
| **SEMICONDUCTORS GROUP** | | | | | | | |
| | IC102 | | 00D 262 2977 917 | BA25BC0FP-E2 | | | |
| | IC103 | | 00D 262 3588 004 | EP2C8Q208C8N | | | |
| | IC104 | | 00D 263 1205 900 | PQ012FZ01ZP +C | | | |
| | IC105 | | 00D 262 3366 912 | EPCS1-SI8-C2F6E6 | | | |
| | IC106 | | 00D 262 3380 008 | AK4101AVQ | | | |
| | IC107 | | 00D 262 3449 004 | LC89057W-VF4A | | | |
| | IC303 | | 00D 262 3589 003 | D708E001RFP250 | | | |
| | IC305 | | 00D GEN 8250 | DSP ROM SUB ASSY | MBM29LV160BE90TN | | |
| | IC306 | | 00D 263 1205 900 | PQ012FZ01ZP +C | | | |
| | IC401 | | 00D 262 3362 903 | PCM1796DBR | | | * |
| | IC402-405 | | 00D 263 0615 902 | BA15218F-DXE2 +C | | | |
| | IC406 | | 00D 262 3362 903 | PCM1796DBR | | | * |
| | IC407-410 | | 00D 263 0615 902 | BA15218F-DXE2 +C | | | |
| | IC411 | | 00D 262 3362 903 | PCM1796DBR | | | * |
| | IC412-415 | | 00D 263 0615 902 | BA15218F-DXE2 +C | | | |
| | IC701 | | 00D 263 0913 905 | PST600C TP | | | |
| | IC702 | | 00D 262 3362 903 | PCM1796DBR | | | * |
| | IC703,704 | | 00D 263 0615 902 | BA15218F-DXE2 +C | | | |
| | IC705,706 | | 00D 263 0896 909 | NJM2068MD-TE1 +C | | | |
| | IC707 | | 00D 262 3362 903 | PCM1796DBR | | | * |
| | IC708,709 | | 00D 263 0615 902 | BA15218F-DXE2 +C | | | |
| | IC710,711 | | 00D 263 0896 909 | NJM2068MD-TE1 +C | | | |
| | IC801 | | 00D 263 1100 021 | KIA7812API | | | |
| | IC802 | | 00D 263 1099 022 | KIA7912PI | | | |
| | TR402,403 | | 00D 269 0119 901 | DTA124EKT96(TAPE) +C | | | |
| | TR404,405 | | 00D 269 0082 902 | DTC114EKT96 +C | | | |
| | TR406,407 | | 00D 273 0460 905 | KTC2875B-RTK +C | | | |
| | TR408-413 | | 00D 269 0119 901 | DTA124EKT96(TAPE) +C | | | |
| | TR414-419 | | 00D 269 0082 902 | DTC114EKT96 +C | | | |
| | TR420-442 | | 00D 273 0460 905 | KTC2875B-RTK +C | | | |
| | TR701 | | 00D 273 0487 904 | 2SC2412K_T146R | | | |
| | TR702 | | 00D 269 0083 901 | DTA114EKT96 +C | | | |
| | TR703 | | 00D 269 0119 901 | DTA124EKT96(TAPE) +C | | | |
| | TR704 | | 00D 273 0487 904 | 2SC2412K_T146R | | | |
| | TR705 | | 00D 269 0119 901 | DTA124EKT96(TAPE) +C | | | |
| | TR706 | | 00D 269 0082 902 | DTC114EKT96 +C | | | |
| | TR707,708 | | 00D 273 0460 905 | KTC2875B-RTK +C | | | |
| | TR709 | | 00D 269 0119 901 | DTA124EKT96(TAPE) +C | | | |
| | TR710 | | 00D 269 0082 902 | DTC114EKT96 +C | | | |
| | TR711 | | 00D 269 0119 901 | DTA124EKT96(TAPE) +C | | | |
| | TR712 | | 00D 269 0082 902 | DTC114EKT96 +C | | | |
| | TR715-718 | | 00D 273 0460 905 | KTC2875B-RTK +C | | | |
| | TR721,722 | | 00D 273 0460 905 | KTC2875B-RTK +C | | | |
| | TR723 | | 00D 269 0082 902 | DTC114EKT96 +C | | | |
| | D101,102 | | 00D 276 0717 903 | 1SS355 TE-17 +C | | | |
| | D301,302 | | 00D 276 0401 905 | 1SS133T77 (TAPE) | | | |
| | D701,702 | | 00D 276 0717 903 | 1SS355 TE-17 +C | | | |
| | D801-804 | | 00D 276 0701 003 | S2L20U-4002P7.5 | | | |
| | D805,806 | | 00D 276 0723 900 | RB721Q-40 | | | |

| | Ref. No. | nsp | Part No. | Part Name | Remarks | Q'ty | New |
|---|---|---|---|---|---|---|---|
| **RESISTORS GROUP** | | | | | | | |
| | R585-591 | | 00D 241 2465 985 | RD14B2E151JT(AMRS) | | | |
| | R594 | | 00D 241 2465 985 | RD14B2E151JT(AMRS) | | | |
| | R597,598 | | 00D 241 2465 985 | RD14B2E151JT(AMRS) | | | |
| | R602 | | 00D 241 2465 985 | RD14B2E151JT(AMRS) | | | |
| | R721 | | 00D 244 2052 986 | RS14B3A751JNBST(S) | | | |
| | R751,752 | | 00D 244 2052 986 | RS14B3A751JNBST(S) | | | |
| | R768-775 | | 00D 241 2467 954 | RD14B2E751JT(AMRS) | | | |
| | R851 | | 00D 244 2051 974 | RS14B3A102JNBST(S) | | | |
| | R852 | | 00D 244 2043 940 | RS14B3A222JNBST(S) | | | |
| | RR500 | | 00D 241 2465 985 | RD14B2E151JT(AMRS) | | | |
| | RR733,734 | | 00D 241 2465 985 | RD14B2E151JT(AMRS) | | | |
| | RR739 | | 00D 241 2465 985 | RD14B2E151JT(AMRS) | | | |
| | RR742 | | 00D 241 2465 985 | RD14B2E151JT(AMRS) | | | |
| **CAPACITORS GROUP** | | | | | | | |
| | C101 | nsp | 00D 257 0511 904 | CK73F1H103ZT +1608 | | | |
| | C103 | nsp | 00D 257 0511 904 | CK73F1H103ZT +1608 | | | |
| | C104 | nsp | 00D 257 0512 903 | CK73F1E104ZT +1608 | | | |
| | C106 | nsp | 00D 257 0512 903 | CK73F1E104ZT +1608 | | | |
| | C107 | nsp | 00D 257 0509 929 | CK73B1H102KT +1608 | | | |
| | C108 | nsp | 00D 257 0512 903 | CK73F1E104ZT +1608 | | | |
| | C109-115 | nsp | 00D 257 0509 929 | CK73B1H102KT +1608 | | | |
| | C116 | nsp | 00D 257 0512 903 | CK73F1E104ZT +1608 | | | |
| | C117 | nsp | 00D 254 4538 900 | CE04W1C100MT SMG/RE3 | | | |
| | C118,119 | nsp | 00D 257 0512 903 | CK73F1E104ZT +1608 | | | |
| | C120 | nsp | 00D 257 0516 954 | CK73B1E104KT +1608 | | | |
| | C121,122 | nsp | 00D 257 0509 929 | CK73B1H102KT +1608 | | | |
| | C123 | nsp | 00D 257 0512 903 | CK73F1E104ZT +1608 | | | |
| | C124-129 | nsp | 00D 257 0509 929 | CK73B1H102KT +1608 | | | |
| | C130 | nsp | 00D 257 0511 904 | CK73F1H103ZT +1608 | | | |
| | C131 | | 00D 254 4693 939 | CE04W1H101MT(RF0) | | | |
| | C132 | nsp | 00D 257 0512 903 | CK73F1E104ZT +1608 | | | |
| | C133 | nsp | 00D 257 0511 904 | CK73F1H103ZT +1608 | | | |
| | C134 | nsp | 00D 257 0512 903 | CK73F1E104ZT +1608 | | | |
| | C135 | nsp | 00D 257 0511 904 | CK73F1H103ZT +1608 | | | |
| | C136,137 | nsp | 00D 257 0512 903 | CK73F1E104ZT +1608 | | | |
| | C138 | nsp | 00D 257 0509 929 | CK73B1H102KT +1608 | | | |
| | C139 | nsp | 00D 257 0511 904 | CK73F1H103ZT +1608 | | | |
| | C140 | nsp | 00D 257 0512 903 | CK73F1E104ZT +1608 | | | |
| | C141,142 | nsp | 00D 257 0509 929 | CK73B1H102KT +1608 | | | |
| | C143 | nsp | 00D 257 0516 954 | CK73B1E104KT +1608 | | | |
| | C144 | nsp | 00D 257 0509 929 | CK73B1H102KT +1608 | | | |
| | C149 | nsp | 00D 257 0511 904 | CK73F1H103ZT +1608 | | | |
| | C150 | nsp | 00D 254 4538 900 | CE04W1C100MT SMG/RE3 | | | |
| | C151 | | 00D 254 4533 950 | CE04W0J471MT SMG/RE3 | | | |
| | C152 | nsp | 00D 257 0512 903 | CK73F1E104ZT +1608 | | | |
| | C153-158 | nsp | 00D 257 0509 929 | CK73B1H102KT +1608 | | | |
| | C159 | nsp | 00D 257 0512 903 | CK73F1E104ZT +1608 | | | |
| | C160 | nsp | 00D 257 0509 929 | CK73B1H102KT +1608 | | | |
| | C161 | nsp | 00D 257 0512 903 | CK73F1E104ZT +1608 | | | |
| | C162 | nsp | 00D 254 4538 900 | CE04W1C100MT SMG/RE3 | | | |
| | C163 | nsp | 00D 257 0516 954 | CK73B1E104KT +1608 | | | |
| | C164 | nsp | 00D 257 0509 929 | CK73B1H102KT +1608 | | | |

| Ref. No. | nsp | Part No. | Part Name | Remarks | Q'ty | New |
|---|---|---|---|---|---|---|
| C165 | nsp | 00D 254 4533 921 | CE04W0J101MT SMG/RE3 | | | |
| C170 | nsp | 00D 257 0509 929 | CK73B1H102KT +1608 | | | |
| C171 | nsp | 00D 257 0512 903 | CK73F1E104ZT +1608 | | | |
| C172 | nsp | 00D 254 4533 921 | CE04W0J101MT SMG/RE3 | | | |
| C173 | nsp | 00D 257 0512 903 | CK73F1E104ZT +1608 | | | |
| C174 | nsp | 00D 257 0509 929 | CK73B1H102KT +1608 | | | |
| C175 | nsp | 00D 257 0516 954 | CK73B1E104KT +1608 | | | |
| C176 | nsp | 00D 257 0512 903 | CK73F1E104ZT +1608 | | | |
| C177 | nsp | 00D 257 0516 909 | CK73B1E223KT +1608 | | | |
| C178 | nsp | 00D 257 0516 954 | CK73B1E104KT +1608 | | | |
| C179,180 | nsp | 00D 257 0512 903 | CK73F1E104ZT +1608 | | | |
| C181 | nsp | 00D 257 0511 904 | CK73F1H103ZT +1608 | | | |
| C182 | nsp | 00D 257 0509 929 | CK73B1H102KT +1608 | | | |
| C183 | nsp | 00D 257 0502 955 | CC73CH1H3R0CT +1608 | | | |
| C184 | nsp | 00D 257 0509 929 | CK73B1H102KT +1608 | | | |
| C185 | nsp | 00D 257 0502 955 | CC73CH1H3R0CT +1608 | | | |
| C186-188 | nsp | 00D 257 0512 903 | CK73F1E104ZT +1608 | | | |
| C189 | nsp | 00D 257 0511 904 | CK73F1H103ZT +1608 | | | |
| C190 | nsp | 00D 257 0509 929 | CK73B1H102KT +1608 | | | |
| C218 | nsp | 00D 257 0511 904 | CK73F1H103ZT +1608 | | | |
| C219 | nsp | 00D 257 0512 903 | CK73F1E104ZT +1608 | | | |
| C220 | nsp | 00D 257 0511 904 | CK73F1H103ZT +1608 | | | |
| C221 | nsp | 00D 257 0512 903 | CK73F1E104ZT +1608 | | | |
| C222 | nsp | 00D 257 0511 904 | CK73F1H103ZT +1608 | | | |
| C223 | nsp | 00D 257 0512 903 | CK73F1E104ZT +1608 | | | |
| C224 | nsp | 00D 257 0511 904 | CK73F1H103ZT +1608 | | | |
| C225 | nsp | 00D 257 0512 903 | CK73F1E104ZT +1608 | | | |
| C226 | nsp | 00D 257 0511 904 | CK73F1H103ZT +1608 | | | |
| C227,228 | nsp | 00D 257 0512 903 | CK73F1E104ZT +1608 | | | |
| C229 | nsp | 00D 257 0511 904 | CK73F1H103ZT +1608 | | | |
| C230 | nsp | 00D 254 4533 921 | CE04W0J101MT SMG/RE3 | | | |
| C231 | nsp | 00D 257 0509 929 | CK73B1H102KT +1608 | | | |
| C232 | nsp | 00D 257 0512 903 | CK73F1E104ZT +1608 | | | |
| C233 | | 00D 257 2015 929 | CS77B1A220MT | | | |
| C301 | nsp | 00D 257 0512 903 | CK73F1E104ZT +1608 | | | |
| C302 | nsp | 00D 257 0509 929 | CK73B1H102KT +1608 | | | |
| C303 | nsp | 00D 254 4538 900 | CE04W1C100MT SMG/RE3 | | | |
| C305 | nsp | 00D 257 0512 903 | CK73F1E104ZT +1608 | | | |
| C306 | | 00D 254 4533 950 | CE04W0J471MT SMG/RE3 | | | |
| C307 | nsp | 00D 257 0512 903 | CK73F1E104ZT +1608 | | | |
| C308 | nsp | 00D 257 0509 929 | CK73B1H102KT +1608 | | | |
| C309 | nsp | 00D 257 0512 903 | CK73F1E104ZT +1608 | | | |
| C310 | nsp | 00D 257 0509 929 | CK73B1H102KT +1608 | | | |
| C311 | nsp | 00D 257 0512 903 | CK73F1E104ZT +1608 | | | |
| C312,313 | nsp | 00D 257 0509 929 | CK73B1H102KT +1608 | | | |
| C314 | nsp | 00D 257 0512 903 | CK73F1E104ZT +1608 | | | |
| C315 | nsp | 00D 257 0509 929 | CK73B1H102KT +1608 | | | |
| C316 | nsp | 00D 257 0512 903 | CK73F1E104ZT +1608 | | | |
| C317 | nsp | 00D 257 0509 929 | CK73B1H102KT +1608 | | | |
| C318 | nsp | 00D 257 0512 903 | CK73F1E104ZT +1608 | | | |
| C319 | | 00D 254 4533 950 | CE04W0J471MT SMG/RE3 | | | |
| C320 | nsp | 00D 254 4538 900 | CE04W1C100MT SMG/RE3 | | | |
| C323 | nsp | 00D 257 0509 929 | CK73B1H102KT +1608 | | | |
| C324 | nsp | 00D 257 0512 903 | CK73F1E104ZT +1608 | | | |
| C327 | nsp | 00D 257 0508 917 | CC73CH1H471JT +1608 | | | |
| C328,329 | nsp | 00D 257 0503 909 | CC73CH1H8R0DT +1608 | | | |

| Ref. No. | nsp | Part No. | Part Name | Remarks | Q'ty | New |
|---|---|---|---|---|---|---|
| C330 | nsp | 00D 257 0508 917 | CC73CH1H471JT +1608 | | | |
| C331 | nsp | 00D 257 0509 929 | CK73B1H102KT +1608 | | | |
| C332 | nsp | 00D 254 4533 921 | CE04W0J101MT SMG/RE3 | | | |
| C333 | nsp | 00D 257 0512 903 | CK73F1E104ZT +1608 | | | |
| C334 | nsp | 00D 257 0509 929 | CK73B1H102KT +1608 | | | |
| C335 | nsp | 00D 257 0512 903 | CK73F1E104ZT +1608 | | | |
| C336,337 | nsp | 00D 257 0509 929 | CK73B1H102KT +1608 | | | |
| C338 | nsp | 00D 257 0512 903 | CK73F1E104ZT +1608 | | | |
| C339 | nsp | 00D 257 0509 929 | CK73B1H102KT +1608 | | | |
| C340 | nsp | 00D 257 0512 903 | CK73F1E104ZT +1608 | | | |
| C341 | nsp | 00D 257 0509 929 | CK73B1H102KT +1608 | | | |
| C342 | nsp | 00D 257 0512 903 | CK73F1E104ZT +1608 | | | |
| C343 | nsp | 00D 257 0509 929 | CK73B1H102KT +1608 | | | |
| C344,345 | nsp | 00D 257 0512 903 | CK73F1E104ZT +1608 | | | |
| C346 | nsp | 00D 257 0509 929 | CK73B1H102KT +1608 | | | |
| C347 | nsp | 00D 257 0512 903 | CK73F1E104ZT +1608 | | | |
| C348,349 | nsp | 00D 257 0509 929 | CK73B1H102KT +1608 | | | |
| C350 | nsp | 00D 257 0512 903 | CK73F1E104ZT +1608 | | | |
| C351 | nsp | 00D 257 0509 929 | CK73B1H102KT +1608 | | | |
| C352 | nsp | 00D 257 0512 903 | CK73F1E104ZT +1608 | | | |
| C353 | nsp | 00D 257 0509 929 | CK73B1H102KT +1608 | | | |
| C354 | nsp | 00D 257 0512 903 | CK73F1E104ZT +1608 | | | |
| C357 | nsp | 00D 254 4538 900 | CE04W1C100MT SMG/RE3 | | | |
| C358 | nsp | 00D 257 0512 903 | CK73F1E104ZT +1608 | | | |
| C359 | nsp | 00D 257 0509 929 | CK73B1H102KT +1608 | | | |
| C360 | nsp | 00D 254 4538 900 | CE04W1C100MT SMG/RE3 | | | |
| C361 | nsp | 00D 257 0512 903 | CK73F1E104ZT +1608 | | | |
| C362 | nsp | 00D 257 0509 929 | CK73B1H102KT +1608 | | | |
| C363 | nsp | 00D 257 0512 903 | CK73F1E104ZT +1608 | | | |
| C364 | nsp | 00D 257 0509 929 | CK73B1H102KT +1608 | | | |
| C369 | | 00D 254 4533 950 | CE04W0J471MT SMG/RE3 | | | |
| C370 | nsp | 00D 257 0511 904 | CK73F1H103ZT +1608 | | | |
| C371 | nsp | 00D 257 0512 903 | CK73F1E104ZT +1608 | | | |
| C372 | nsp | 00D 257 0509 929 | CK73B1H102KT +1608 | | | |
| C401 | nsp | 00D 257 0516 954 | CK73B1E104KT +1608 | | | |
| C402-404 | nsp | 00D 257 0501 901 | CK73B1H103KT (1608) +1608 | | | |
| C405,406 | nsp | 00D 257 0512 903 | CK73F1E104ZT +1608 | | | |
| C407,408 | | 00D 254 4693 939 | CE04W1H101MT(RF0) | | | |
| C409-411 | nsp | 00D 257 0501 901 | CK73B1H103KT (1608) +1608 | | | |
| C412 | nsp | 00D 257 0506 951 | CC73CH1H101JT +1608 | | | |
| C413-416 | | 00D 257 3006 911 | CF73=1C104JT(ECHUB5)+3225 | | | |
| C417-420 | | 00D 254 4693 926 | CE04W1H470MT(RF0) | | | |
| C421,422 | nsp | 00D 257 0512 903 | CK73F1E104ZT +1608 | | | |
| C423-426 | | 00D 254 4692 901 | CE04W1J100MT(RF0) | | | |
| C427-430 | nsp | 00D 257 0512 903 | CK73F1E104ZT +1608 | | | |
| C439-446 | nsp | 00D 257 0512 903 | CK73F1E104ZT +1608 | | | |
| C447-454 | | 00D 257 3011 919 | CF73=1H102JT(ECHUB5)+2125 | | | |
| C455-458 | | 00D 257 3006 908 | CF73=1C682JT(ECHUB5)+2125 | | | |
| C459-462 | | 00D 257 3014 974 | CF73=1C183JT(ECHUB5)+3216 | | | |
| C463-470 | | 00D 257 3011 948 | CF73=1H222JT(ECHUB5)+2125 | | | |
| C471,472 | nsp | 00D 257 0506 951 | CC73CH1H101JT +1608 | | | |
| C473,474 | | 00D 255 4256 955 | CQ93P2A103JT(NH2) | | | |
| C475-482 | nsp | 00D 257 0512 903 | CK73F1E104ZT +1608 | | | |
| C483 | | 00D 255 4256 955 | CQ93P2A103JT(NH2) | | | |
| C484-486 | nsp | 00D 257 0506 951 | CC73CH1H101JT +1608 | | | |
| C487-489 | | 00D 254 4692 901 | CE04W1J100MT(RF0) | | | |

| Ref. No. | nsp | Part No. | Part Name | Remarks | Q'ty | New |
|---|---|---|---|---|---|---|
| C490 | nsp | 00D 257 0506 951 | CC73CH1H101JT +1608 | | | |
| C491-494 | nsp | 00D 257 0503 925 | CC73CH1H100DT +1608 | | | |
| C495,496 | nsp | 00D 257 0506 951 | CC73CH1H101JT +1608 | | | |
| C497,498 | | 00D 257 3006 911 | CF73=1C104JT(ECHUB5)+3225 | | | |
| C499 | | 00D 254 4693 926 | CE04W1H470MT(RF0) | | | |
| C503,504 | | 00D 254 4693 942 | CE04W1H221MT(RF0) | | | |
| C506 | nsp | 00D 257 0516 954 | CK73B1E104KT +1608 | | | |
| C507 | nsp | 00D 257 0501 901 | CK73B1H103KT (1608) +1608 | | | |
| C703 | nsp | 00D 257 0516 954 | CK73B1E104KT +1608 | | | |
| C704 | nsp | 00D 257 0501 901 | CK73B1H103KT (1608) +1608 | | | |
| C705 | nsp | 00D 257 0516 954 | CK73B1E104KT +1608 | | | |
| C706 | nsp | 00D 257 0501 901 | CK73B1H103KT (1608) +1608 | | | |
| C710 | | 00D 254 4750 704 | CE04W1H471MC(RFO) | | | |
| C713 | nsp | 00D 257 0501 901 | CK73B1H103KT (1608) +1608 | | | |
| C714 | nsp | 00D 257 0506 951 | CC73CH1H101JT +1608 | | | |
| C715 | nsp | 00D 257 0501 901 | CK73B1H103KT (1608) +1608 | | | |
| C716 | nsp | 00D 257 0506 951 | CC73CH1H101JT +1608 | | | |
| C717 | | 00D 257 3006 924 | CF73=1C103JT(ECHUB5)+2125 | | | |
| C718 | nsp | 00D 257 0506 951 | CC73CH1H101JT +1608 | | | |
| C719 | | 00D 254 4692 901 | CE04W1J100MT(RF0) | | | |
| C720 | nsp | 00D 257 0506 951 | CC73CH1H101JT +1608 | | | |
| C721 | | 00D 257 3006 924 | CF73=1C103JT(ECHUB5)+2125 | | | |
| C722 | nsp | 00D 257 0506 951 | CC73CH1H101JT +1608 | | | |
| C724 | | 00D 254 4692 901 | CE04W1J100MT(RF0) | | | |
| C725 | nsp | 00D 257 0506 951 | CC73CH1H101JT +1608 | | | |
| C726-729 | nsp | 00D 257 0516 954 | CK73B1E104KT +1608 | | | |
| C730 | nsp | 00D 257 0501 901 | CK73B1H103KT (1608) +1608 | | | |
| C731 | | 00D 257 3006 924 | CF73=1C103JT(ECHUB5)+2125 | | | |
| C732,733 | nsp | 00D 257 0501 901 | CK73B1H103KT (1608) +1608 | | | |
| C734 | | 00D 257 3006 924 | CF73=1C103JT(ECHUB5)+2125 | | | |
| C735 | nsp | 00D 257 0501 901 | CK73B1H103KT (1608) +1608 | | | |
| C736-739 | | 00D 254 4692 901 | CE04W1J100MT(RF0) | | | |
| C740-743 | | 00D 254 4693 926 | CE04W1H470MT(RF0) | | | |
| C744-747 | nsp | 00D 257 0516 954 | CK73B1E104KT +1608 | | | |
| C748 | nsp | 00D 257 0501 901 | CK73B1H103KT (1608) +1608 | | | |
| C750,751 | nsp | 00D 257 0501 901 | CK73B1H103KT (1608) +1608 | | | |
| C753,754 | nsp | 00D 257 0501 901 | CK73B1H103KT (1608) +1608 | | | |
| C756,757 | nsp | 00D 257 0501 901 | CK73B1H103KT (1608) +1608 | | | |
| C759 | nsp | 00D 257 0501 901 | CK73B1H103KT (1608) +1608 | | | |
| C768-775 | | 00D 255 4254 915 | CQ93P2A102JT(NH2) | | | |
| C776-779 | | 00D 255 4253 974 | CQ93P2A681JT(NH2) | | | |
| C780 | nsp | 00D 257 0501 901 | CK73B1H103KT (1608) +1608 | | | |
| C781,782 | | 00D 255 4253 974 | CQ93P2A681JT(NH2) | | | |
| C783,784 | nsp | 00D 257 0501 901 | CK73B1H103KT (1608) +1608 | | | |
| C785,786 | | 00D 255 4253 974 | CQ93P2A681JT(NH2) | | | |
| C787 | nsp | 00D 257 0501 901 | CK73B1H103KT (1608) +1608 | | | |
| C788,789 | | 00D 255 4256 913 | CQ93P2A682JT(NH2) | | | |
| C790,791 | | 00D 255 4257 912 | CQ93P2A183JT(NH2) | | | |
| C792-795 | | 00D 255 4254 999 | CQ93P2A222JT(NH2) | | | |
| C796,797 | | 00D 254 4693 939 | CE04W1H101MT(RF0) | | | |
| C798,799 | | 00D 254 3091 901 | CE04D1H220MBPT (RBD) | | | |
| C800 | nsp | 00D 257 0501 901 | CK73B1H103KT (1608) +1608 | | | |
| C801 | nsp | 00D 257 0512 903 | CK73F1E104ZT +1608 | | | |
| C802 | | 00D 254 4693 939 | CE04W1H101MT(RF0) | | | |
| C803 | nsp | 00D 257 0501 901 | CK73B1H103KT (1608) +1608 | | | |
| C804 | nsp | 00D 257 0512 903 | CK73F1E104ZT +1608 | | | |

| | Ref. No. | nsp | Part No. | Part Name | Remarks | Q'ty | New |
|---|---|---|---|---|---|---|---|
| | C805 | | 00D 254 4693 939 | CE04W1H101MT(RF0) | | | |
| | C814,815 | | 00D 254 4703 735 | CE04W1H471MC(RFS#A) | | | |
| | C816-818 | | 00D 255 4256 955 | CQ93P2A103JT(NH2) | | | |
| | C851 | | 00D 255 4256 955 | CQ93P2A103JT(NH2) | | | |
| | C854,855 | | 00D 254 4787 706 | CE04W1H332MC(RFS#5) | | | |
| | CC401 | | 00D 254 4693 926 | CE04W1H470MT(RF0) | | | |
| | CC402 | nsp | 00D 257 0516 954 | CK73B1E104KT +1608 | | | |
| | CC403,404 | | 00D 254 4692 901 | CE04W1J100MT(RF0) | | | |
| | CC405,406 | nsp | 00D 257 0516 954 | CK73B1E104KT +1608 | | | |
| | CC411-414 | nsp | 00D 257 0512 903 | CK73F1E104ZT +1608 | | | |
| | CC415-418 | | 00D 257 3011 919 | CF73=1H102JT(ECHUB5)+2125 | | | |
| | CC419,420 | | 00D 257 3012 905 | CF73=1H682JT(ECHUB5)+3216 | | | |
| | CC421,422 | | 00D 257 3012 950 | CF73=1H183JT(ECHUB5) | | | |
| | CC423-426 | | 00D 257 3011 948 | CF73=1H222JT(ECHUB5)+2125 | | | |
| | CC427 | | 00D 254 4693 939 | CE04W1H101MT(RF0) | | | |
| | CC428-431 | nsp | 00D 257 0512 903 | CK73F1E104ZT +1608 | | | |
| | CC432 | | 00D 254 4693 939 | CE04W1H101MT(RF0) | | | |
| | CC433-438 | | 00D 254 3091 901 | CE04D1H220MBPT (RBD) | | | |
| | CC439,440 | nsp | 00D 257 0503 925 | CC73CH1H100DT +1608 | | | |
| | CC441 | | 00D 254 3091 901 | CE04D1H220MBPT (RBD) | | | |
| | CC442-447 | | 00D 254 4693 939 | CE04W1H101MT(RF0) | | | |
| | CC448-453 | nsp | 00D 257 0508 917 | CC73CH1H471JT +1608 | | | |
| | CC701-704 | nsp | 00D 257 0501 901 | CK73B1H103KT (1608) +1608 | | | |
| | CC705,706 | nsp | 00D 257 0503 925 | CC73CH1H100DT +1608 | | | |
| | CC712 | | 00D 255 4256 955 | CQ93P2A103JT(NH2) | | | |
| | CC714 | | 00D 255 4256 955 | CQ93P2A103JT(NH2) | | | |
| | CC716 | | 00D 254 4703 706 | CE04W1H101MC(RFS#A) | | | |
| | CC718 | | 00D 254 4703 706 | CE04W1H101MC(RFS#A) | | | |
| | CC721,722 | | 00D 255 4253 932 | CQ93P2A471JT(NH2) | | | |
| | | | | | | | |
| **OTHERS PARTS GROUP** | | | | | | | |
| | AS402 | | - | COMMON PLATE(CU 0.8) | | | |
| | AS801,802 | | - | RADIATOR | | | |
| | AS910 | | - | COMMON PLATE(CU 0.8) | | | |
| | CX032 | nsp | 00D 205 0653 036 | 3P VH CON.BASE | | | |
| | CX061 | nsp | 00D 205 1386 027 | 6P BASE(9115B-PT1) | | | |
| | CX103 | nsp | 00D 205 0480 005 | 10P KR CON BASE(L) | | | |
| | CX125-127 | nsp | 00D 205 1386 085 | 12P BASE(9115B-PT1) | | | |
| | CX128 | nsp | 00D 205 0536 027 | 12P CONNE SOCKET | | | |
| | CX129 | nsp | 00D 205 1386 085 | 12P BASE(9115B-PT1) | | | |
| | CX131 | nsp | 00D 205 1383 020 | 13P-FFC-BASE(9615C) | | | |
| | CX213 | nsp | 00D 205 1383 033 | 21P-FFC-BASE(9615C) | | | |
| | CX214 | | 00D 205 1346 009 | 21P 1.25FJ CONN.BASE | | | |
| | CY044 | nsp | 00D 205 0343 045 | 4P CONN.BASE(KR-PH) | | | |
| | CY125-129 | nsp | 00D 205 0536 027 | 12P CONNE SOCKET | | | |
| | CY212 | nsp | 00D 205 1383 033 | 21P-FFC-BASE(9615C) | | | |
| | CY214 | | 00D 205 1345 000 | 21P 1.25FJ CONN.PLUG | | | |
| | CY331 | nsp | 00D 205 1383 004 | 33P-FFC-BASE(9615C) | | | |
| | FB101,102 | | 00D 235 0147 909 | E.FIL(BLM21PG221SN1)+2125 | | | |
| | FB301 | | 00D 235 0130 903 | CHIP EMIFIL(11A121) +1608 | | | |

| | Ref. No. | nsp | Part No. | Part Name | Remarks | Q'ty | New |
|---|---|---|---|---|---|---|---|
| | JK101 | | 00D 205 1222 000 | RJ-45 JACK(GND) | | | |
| | JK401-406 | | 00D 204 8728 009 | 1P PIN JACK(BK)-LF | | | |
| | JK701,702 | | 00D 204 8666 006 | 1P PIN JACK(BK) | | | |
| | L401,402 | | 00D 235 0125 905 | INDUCTOR(FLC32C220K)+3216 | | | |
| | L801,802 | | 00D 235 0125 905 | INDUCTOR(FLC32C220K)+3216 | | | |
| | W101 | | - | M3-SCREW-TERMINAL08R | | | |
| | W407 | | - | M3-SCREW-TERMINAL08R | | | |
| | W707 | | - | M3-SCREW-TERMINAL08R | | | |
| | W711,712 | | - | M3-SCREW-TERMINAL08R | | | |
| | W801,802 | | - | M3-SCREW-TERMINAL08R | | | |
| | X101 | | 00D 399 1017 002 | X-TAL(24.576MHZ) | | | |
| | X301 | | 00D 399 0951 004 | X'TAL(25MHZ) | | | |
| | | nsp | 0RD 471 3303 016 | 3X6 CBS-Z | | | |

## 00DGU-3752 DIGITAL VIDEO P.W.B. UNIT ASS'Y

| | Ref. No. | nsp | Part No. | Part Name | Remarks | Q'ty | New |
|---|---|---|---|---|---|---|---|
| **SEMICONDUCTORS GROUP** | | | | | | | |
| | IC101 | | 00D 262 3605 000 | sxT2LF-400(Realta) | | | |
| | IC103 | | 00D 262 2570 903 | TC7W241FU(TE12L) | | | |
| | IC701-704 | | 00D 262 3479 003 | EM6A9320BI-4MG | | | |
| | IC800 | | 00D 262 2977 933 | BA50BC0FP-E2 | | | |
| | IC802 | | 00D GEN 8134 | I/P ROM SUB ASSY | MX29LV640BBTC-90 | | * |
| | IC803 | | 00D 262 3473 902 | LP2995M | | | * |
| | IC806 | | 00D 262 3642 908 | LM1117MPX-1.8/NOPB | | | |
| | IC807 | | 00D 262 3364 011 | SII9030CTU-7 | | | |
| | IC809 | | 00D 262 1230 901 | TC7S04FTE85L +C | | | |
| | IC904 | | 00D 262 3493 908 | TC7MBL3245AFK | | | |
| | IC906 | | 00D 262 3493 908 | TC7MBL3245AFK | | | |
| | TR800 | | 00D 273 0460 905 | KTC2875B-RTK +C | | | |
| | TR803 | | 00D 275 0110 905 | HN1K02FU-TE85L | | | |
| | D800,801 | | 00D 276 0717 903 | 1SS355 TE-17 +C | | | |
| | D802 | | 00D 276 0750 902 | RB521S-30TE61 +REF | | | |
| | D804 | | 00D 276 0717 903 | 1SS355 TE-17 +C | | | |
| **RESISTORS GROUP** | | | | | | | |
| | R148-151 | | 00D 247 2020 933 | RM73B--103FT +1608 | | | |
| | R275 | | 00D 247 2019 928 | RM73B--750FT | | | |
| | R276 | | 00D 247 2021 932 | RM73B--331FT | | | |
| | R277 | | 00D 247 2021 945 | RM73B--162FT | | | |
| | R278 | | 00D 247 2019 928 | RM73B--750FT | | | |
| | R701-704 | | 00D 247 2020 933 | RM73B--103FT +1608 | | | |
| | R707-709 | | 00D 247 2020 933 | RM73B--103FT +1608 | | | |
| | R712 | | 00D 247 2020 933 | RM73B--103FT +1608 | | | |
| | R717 | | 00D 247 2021 932 | RM73B--331FT | | | |
| | R718 | | 00D 247 2019 928 | RM73B--750FT | | | |
| | R721 | | 00D 247 2019 928 | RM73B--750FT | | | |
| | R724 | | 00D 247 2021 932 | RM73B--331FT | | | |
| | R725,726 | | 00D 247 2019 928 | RM73B--750FT | | | |
| | R767,768 | | 00D 247 2021 945 | RM73B--162FT | | | |
| | R938 | | 00D 247 2025 938 | RM73B--391FT | | | |
| | R967-970 | | 00D 247 2025 909 | RM73B--821FT | | | |
| **CAPACITORS GROUP** | | | | | | | |
| | C101-118 | nsp | 00D 257 5009 974 | CK73F1C104ZT +1005 | | | |
| | C119 | | 00D 257 2015 929 | CS77B1A220MT | | | |
| | C120-127 | nsp | 00D 257 5009 974 | CK73F1C104ZT +1005 | | | |
| | C128 | | 00D 257 4011 905 | CE67C0J101MT (RV2) +REF | | | |
| | C129 | nsp | 00D 257 5009 974 | CK73F1C104ZT +1005 | | | |
| | C130,131 | nsp | 00D 257 5009 916 | CK73B1C103KT | | | |
| | C132-141 | nsp | 00D 257 5009 974 | CK73F1C104ZT +1005 | | | |
| | C142 | | 00D 257 2015 929 | CS77B1A220MT | | | |
| | C143-166 | nsp | 00D 257 5009 974 | CK73F1C104ZT +1005 | | | |
| | C167 | | 00D 257 4012 917 | CE67C1C220MT (RV2) +REF | | | |
| | C168-171 | | 00D 257 4012 904 | CE67C1C100MT (RV2B55 +REF | | | |
| | C172-177 | nsp | 00D 257 5009 974 | CK73F1C104ZT +1005 | | | |
| | C178,179 | | 00D 257 4011 905 | CE67C0J101MT (RV2) +REF | | | |
| | C180,181 | nsp | 00D 257 5009 916 | CK73B1C103KT | | | |

| | Ref. No. | nsp | Part No. | Part Name | Remarks | Q'ty | New |
|---|---|---|---|---|---|---|---|
| | C182 | nsp | 00D 257 5009 974 | CK73F1C104ZT +1005 | | | |
| | C183 | | 00D 257 4012 904 | CE67C1C100MT (RV2B55 +REF | | | |
| | C184,185 | nsp | 00D 257 5009 974 | CK73F1C104ZT +1005 | | | |
| | C188 | nsp | 00D 257 0506 951 | CC73CH1H101JT +1608 | | | |
| | C509 | | 00D 257 2015 916 | CS77B1A101MT | | | |
| | C510 | | 00D 257 2015 932 | CS77B1A470MT | | | |
| | C511 | | 00D 257 2015 929 | CS77B1A220MT | | | |
| | C701-709 | nsp | 00D 257 5009 974 | CK73F1C104ZT +1005 | | | |
| | C710 | | 00D 257 4012 917 | CE67C1C220MT (RV2) +REF | | | |
| | C711-719 | nsp | 00D 257 5009 974 | CK73F1C104ZT +1005 | | | |
| | C720 | | 00D 257 4012 917 | CE67C1C220MT (RV2) +REF | | | |
| | C721-729 | nsp | 00D 257 5009 974 | CK73F1C104ZT +1005 | | | |
| | C730 | | 00D 257 4012 917 | CE67C1C220MT (RV2) +REF | | | |
| | C731-739 | nsp | 00D 257 5009 974 | CK73F1C104ZT +1005 | | | |
| | C740 | | 00D 257 4012 917 | CE67C1C220MT (RV2) +REF | | | |
| | C741-748 | nsp | 00D 257 5009 916 | CK73B1C103KT | | | |
| | C749-758 | nsp | 00D 257 5009 974 | CK73F1C104ZT +1005 | | | |
| | C759 | | 00D 257 2015 916 | CS77B1A101MT | | | |
| | C760 | | 00D 257 2015 929 | CS77B1A220MT | | | |
| | C801 | | 00D 257 4012 904 | CE67C1C100MT (RV2B55 +REF | | | |
| | C802 | nsp | 00D 257 5009 974 | CK73F1C104ZT +1005 | | | |
| | C804 | nsp | 00D 257 5009 974 | CK73F1C104ZT +1005 | | | |
| | C805,806 | nsp | 00D 257 5009 916 | CK73B1C103KT | | | |
| | C807 | nsp | 00D 257 5009 974 | CK73F1C104ZT +1005 | | | |
| | C808 | | 00D 257 2015 932 | CS77B1A470MT | | | |
| | C809 | | 00D 257 4011 905 | CE67C0J101MT (RV2) +REF | | | |
| | C810 | | 00D 257 2015 932 | CS77B1A470MT | | | |
| | C811 | | 00D 257 4011 905 | CE67C0J101MT (RV2) +REF | | | |
| | C812-846 | nsp | 00D 257 5009 916 | CK73B1C103KT | | | |
| | C900,901 | nsp | 00D 257 5009 974 | CK73F1C104ZT +1005 | | | |
| | C903 | nsp | 00D 257 5009 974 | CK73F1C104ZT +1005 | | | |
| | C905-909 | nsp | 00D 257 5009 974 | CK73F1C104ZT +1005 | | | |
| | C910 | nsp | 00D 257 5006 993 | CK73B1H102KT +1005 | | | |
| | C911,912 | nsp | 00D 257 5009 974 | CK73F1C104ZT +1005 | | | |
| | C913,914 | nsp | 00D 257 5006 993 | CK73B1H102KT +1005 | | | |
| | C915 | nsp | 00D 257 5009 974 | CK73F1C104ZT +1005 | | | |
| | C916 | nsp | 00D 257 5006 993 | CK73B1H102KT +1005 | | | |
| | C917 | nsp | 00D 257 5009 974 | CK73F1C104ZT +1005 | | | |
| | C918-921 | nsp | 00D 257 5006 993 | CK73B1H102KT +1005 | | | |
| | C922,923 | nsp | 00D 257 5009 974 | CK73F1C104ZT +1005 | | | |
| | C924-926 | nsp | 00D 257 5006 993 | CK73B1H102KT +1005 | | | |
| | C935-938 | nsp | 00D 257 0516 954 | CK73B1E104KT +1608 | | | |
| | C946,947 | nsp | 00D 257 5009 974 | CK73F1C104ZT +1005 | | | |
| | C970,971 | | 00D 257 4012 920 | CE67C1C470MT (RV2) +REF | | | |
| | C972 | | 00D 257 2015 929 | CS77B1A220MT | | | |
| | C973,974 | | 00D 254 4655 922 | CE67C0J470MT (RV2) +REF | | | |
| | C975,976 | | 00D 254 4655 906 | CE67C0J220MT (RV2) +REF | | | |
| | C977 | | 00D 254 4655 922 | CE67C0J470MT (RV2) +REF | | | |
| | C978-982 | | 00D 257 4012 904 | CE67C1C100MT (RV2B55 +REF | | | |
| | C983 | nsp | 00D 257 5009 974 | CK73F1C104ZT +1005 | | | |
| | C984-993 | nsp | 00D 257 5003 983 | CC73CH1H470JT | | | |
| **OTHERS PARTS GROUP** | | | | | | | |
| | CX123 | nsp | 00D 205 1324 021 | 12P PIN HEADER(9120) | | | |
| | CX162 | nsp | 00D 205 1324 063 | 16P PIN HEADER(9120) | | | |
| | CX811 | nsp | 00D 205 1394 006 | 19P HDMI CONNECTOR | | | |

| | Ref. No. | nsp | Part No. | Part Name | Remarks | Q'ty | New |
|---|---|---|---|---|---|---|---|
| | CY064 | nsp | 00D 205 0449 062 | 6P VH CONNECTOR BASE | | | |
| | CY122 | nsp | 00D 205 1386 085 | 12P BASE(9115B-PT1) | | | |
| | CY125 | nsp | 00D 205 1386 085 | 12P BASE(9115B-PT1) | | | |
| | CY131 | nsp | 00D 205 0892 088 | 13P FFC CON. BASE | | | |
| | CY161 | nsp | 00D 205 1324 063 | 16P PIN HEADER(9120) | | | |
| | FB101-105 | | 00D 235 0136 907 | FBMJ1608HS280NT +1608 | | | |
| | FB800-806 | nsp | 00D 247 2018 903 | RM73B--0R0KT +1608 | | | |
| | FB807 | nsp | 00D 247 2003 989 | RM73B--330JT +1608 | | | |
| | L800 | | 00D 235 0125 905 | INDUCTOR(FLC32C220K)+3216 | | | |
| | L805,806 | | 00D 235 0125 905 | INDUCTOR(FLC32C220K)+3216 | | | |
| | W701,702 | | - | M3 SCREW TERMINAL | | | |
| | W704 | | - | M3 SCREW TERMINAL | | | |
| | W800,801 | | - | M3-SCREW-TERMINAL08R | | | |
| | X101 | | 00D 399 0987 900 | FCXO-05(66.666MHz) | | | |

## 00DGU-3793 FAN POWER P.W.B. UNIT ASS'Y

| | Ref. No. | nsp | Part No. | Part Name | Remarks | Q'ty | New |
|---|---|---|---|---|---|---|---|
| **SEMICONDUCTORS GROUP** | | | | | | | |
| | IC801 | | 00D 263 1100 050 | KIA7808API | | | |
| | D801 | | 00D 276 0401 905 | 1SS133T77 (TAPE) | | | |
| | | | | | | | |
| **CAPACITORS GROUP** | | | | | | | |
| | C801 | nsp | 00D 257 0514 901 | CK73F1C334ZT +1608 | | | |
| | C802 | nsp | 00D 257 0512 903 | CK73F1E104ZT +1608 | | | |
| | C803 | nsp | 00D 254 4538 900 | CE04W1C100MT SMG/RE3 | | | |
| | | | | | | | |
| **OTHERS PARTS GROUP** | | | | | | | |
| | CY038 | nsp | 00D 205 0343 032 | 3P CONN.BASE(KR-PH) | | | |

# PARTS LIST OF P.W.B. UNIT (for E2, model)

＊本表に記載されている部品は、補修用部品のため製品に使用している部品とは一部、形状、寸法などが異なる場合があります。
＊ The parts listed below are for maintenance only, might differ from the parts used in the unit in appearances or dimensions.

＊ "nsp" 印の部品は常時在庫していませんので供給に長時間を要することがあります。場合によっては、供給をお断りする場合があります。
＊ Part indicated with the mark “nsp” are not always in stock and possibly to take a long period of time for supplying, or in some case supplying of part may be refused.

## 00DGU-3749A MAIN/A.VIDEO P.W.B. UNIT ASS'Y

| | Ref. No. | nsp | Part No. | Part Name | Remarks | Q'ty | New |
|---|---|---|---|---|---|---|---|
| **SEMICONDUCTORS GROUP** | | | | | | | |
| | IC101 | | 00D 262 2977 917 | BA25BC0FP-E2 | | | |
| | IC102 | | 00D 263 1205 900 | PQ012FZ01ZP +C | | | |
| | IC151 | | 00D 262 3591 907 | BD7956FS-E2 | | | |
| | IC152 | | 00D GEN 8103 | EEPROM ROM SUB ASSY | BR24L32F-WE2 +C | | |
| | IC153 | | 00D 262 3082 924 | BD4730G-TR | | | |
| | IC154 | | 00D 262 3216 907 | SM8707EV +C | | | |
| | IC155 | | 00D GEN 8284 | FE/BE ROM SUB ASSY | MX29LV320CBTC-70G | | |
| | IC156 | | 00D 262 3594 001 | EM638165TS-7G | | | |
| | IC157 | | 00D 262 3592 003 | MN2DS0009AA | | | |
| | IC158 | | 00D 262 3594 001 | EM638165TS-7G | | | |
| | IC159 | | 00D 262 2517 908 | SN74LV08APW-EL2 +REF | | | |
| | IC161 | | 00D 262 3601 907 | TC7WH157FU(TE12L,F) | | | |
| | IC162 | | 00D 263 0989 900 | NJM2904M-TE1 +C | | | |
| | IC301 | | 00D 263 0673 902 | BA10393F-E2 +C | | | |
| | IC400 | | 00D 262 2514 901 | SN74LV138APW-EL2 +C | | | |
| | IC401 | | 00D 262 3217 003 | CXD2753R +C | | | |
| | IC402 | | 00D 262 2641 900 | SN74LV541APW-EL2 +C | | | |
| | IC403-406 | | 00D 262 3242 900 | SN74LV273APW-EL2 +REF | | | |
| | IC408 | | 00D 262 2641 900 | SN74LV541APW-EL2 +C | | | |
| | IC409 | | 00D 262 2875 006 | 16M SDRAM(TSOP)-7/8 +C | | | |
| | IC410,411 | | 00D 262 2669 908 | SN74LV157APW +C | | | |
| | IC412-414 | | 00D 262 2517 908 | SN74LV08APW-EL2 +REF | | | |
| | IC500 | | 00D 262 2977 917 | BA25BC0FP-E2 | | | |
| | IC501 | | 00D 262 3481 004 | ADV7324 | | | |
| | IC502 | | 00D 262 3595 903 | SN74LV594APWR | | | |
| | IC503 | | 00D 262 3277 904 | SN74LVC157APW-EL2 +C | | | |
| | IC505 | | 00D 262 3365 900 | BH7868FS | | | |
| | IC507 | | 00D 262 2813 903 | SN74AHCT08PW-EL2 +C | | | |
| | IC550 | | 00D 262 3481 004 | ADV7324 | | | |
| | IC551 | | 00D 262 3365 900 | BH7868FS | | | |
| | IC651 | | 00D 262 1793 901 | TC4W53F +C | | | |
| | IC652 | | 00D 262 0707 901 | TC4053BF (TAPE) +C | | | |
| | IC653 | | 00D 263 1115 906 | NJM2267M (TE2) | | | |
| | IC654 | | 00D 262 2534 907 | BA7660FS-E2 +C | | | |
| | | | | | | | |
| | TR150 | | 00D 272 0160 901 | 2SB1132T100Q +C | | | |
| | TR153 | | 00D 272 0160 901 | 2SB1132T100Q +C | | | |
| | TR154,155 | | 00D 273 0487 904 | 2SC2412K_T146R | | | |
| | TR156 | | 00D 269 0082 902 | DTC114EKT96 +C | | | |
| | TR157 | | 00D 275 0109 903 | 2SK3019-TL | | | |
| | TR158 | | 00D 269 0082 902 | DTC114EKT96 +C | | | |
| | TR159 | | 00D 271 0259 903 | 2SA1162-GR(TE85L) | | | |
| | TR160 | | 00D 269 0082 902 | DTC114EKT96 +C | | | |
| | TR161 | | 00D 273 0487 904 | 2SC2412K_T146R | | | |
| | TR162 | | 00D 275 0109 903 | 2SK3019-TL | | | |
| | TR163 | | 00D 273 0487 904 | 2SC2412K_T146R | | | |
| | TR164,165 | | 00D 275 0109 903 | 2SK3019-TL | | | |
| | TR166,167 | | 00D 269 0229 901 | DTC143TUAT106 | | | |
| | TR302 | | 00D 273 0460 905 | KTC2875B-RTK +C | | | |

| | Ref. No. | nsp | Part No. | Part Name | Remarks | Q'ty | New |
|---|---|---|---|---|---|---|---|
| | TR502-504 | | 00D 271 0293 901 | 2SA1022-B +C | | | |
| | TR550-552 | | 00D 272 0125 904 | 2SB709A +C | | | |
| | TR553,554 | | 00D 271 0293 901 | 2SA1022-B +C | | | |
| | TR651,652 | | 00D 269 0082 902 | DTC114EKT96 +C | | | |
| | TR653 | | 00D 269 0083 901 | DTA114EKT96 +C | | | |
| | TR654,655 | | 00D 269 0082 902 | DTC114EKT96 +C | | | |
| | D101,102 | | 00D 276 0401 905 | 1SS133T77 (TAPE) | | | |
| | D152 | | 00D 276 0401 905 | 1SS133T77 (TAPE) | | | |
| | D500 | | 00D 276 0717 903 | 1SS355 TE-17 +C | | | |
| | | | | | | | |
| **RESISTORS GROUP** | | | | | | | |
| | R151 | | 00D 244 2051 945 | RS14B3A010JNBST(S) | | | |
| | RR301 | | 00D 247 2020 933 | RM73B--103FT +1608 | | | |
| | RR303 | | 00D 247 2020 933 | RM73B--103FT +1608 | | | |
| | RR304 | | 00D 247 2028 906 | RM73B--302FT +1608 | | | |
| | RR316 | | 00D 247 2021 903 | RM73B--122FT +1608 | | | |
| | RR318-320 | | 00D 247 2021 903 | RM73B--122FT +1608 | | | |
| | RA500-506 | | 00D 247 9002 909 | MNR14=330JE0AB +C | | | |
| | RA507,508 | | 00D 247 9007 920 | MNR14=0R0JE0 | | | |
| | RA550-556 | | 00D 247 9002 909 | MNR14=330JE0AB +C | | | |
| | VR501 | | 00D 211 6148 906 | V03PB471MT(RH03ADCS) +REF | | | |
| | VR550,551 | | 00D 211 6148 906 | V03PB471MT(RH03ADCS) +REF | | | |
| **CAPACITORS GROUP** | | | | | | | |
| | C101 | nsp | 00D 257 0512 903 | CK73F1E104ZT +1608 | | | |
| | C102 | nsp | 00D 254 4533 921 | CE04W0J101MT SMG/RE3 | | | |
| | C103 | nsp | 00D 257 0511 904 | CK73F1H103ZT +1608 | | | |
| | C104 | nsp | 00D 257 0512 903 | CK73F1E104ZT +1608 | | | |
| | C105,106 | nsp | 00D 254 4533 921 | CE04W0J101MT SMG/RE3 | | | |
| | C107 | nsp | 00D 257 0512 903 | CK73F1E104ZT +1608 | | | |
| | C108 | nsp | 00D 257 0511 904 | CK73F1H103ZT +1608 | | | |
| | C109 | nsp | 00D 257 0512 903 | CK73F1E104ZT +1608 | | | |
| | C111 | | 00D 257 4012 917 | CE67C1C220MT (RV2) +REF | | | |
| | C112 | nsp | 00D 257 0512 903 | CK73F1E104ZT +1608 | | | |
| | C113 | | 00D 257 4011 905 | CE67C0J101MT (RV2) +REF | | | |
| | C114 | | 00D 257 2015 929 | CS77B1A220MT | | | |
| | C115 | | 00D 257 4011 905 | CE67C0J101MT (RV2) +REF | | | |
| | C116 | nsp | 00D 257 0507 976 | CC73CH1H331JT +1608 | | | |
| | C117 | | 00D 257 2015 929 | CS77B1A220MT | | | |
| | C118 | nsp | 00D 257 0512 903 | CK73F1E104ZT +1608 | | | |
| | C119,120 | | 00D 257 4011 905 | CE67C0J101MT (RV2) +REF | | | |
| | C121 | nsp | 00D 257 0512 903 | CK73F1E104ZT +1608 | | | |
| | C122 | | 00D 257 4012 917 | CE67C1C220MT (RV2) +REF | | | |
| | C123 | nsp | 00D 257 0512 903 | CK73F1E104ZT +1608 | | | |
| | C124,125 | | 00D 257 4011 905 | CE67C0J101MT (RV2) +REF | | | |
| | C126,127 | nsp | 00D 257 0512 903 | CK73F1E104ZT +1608 | | | |
| | C136,137 | nsp | 00D 257 0511 904 | CK73F1H103ZT +1608 | | | |
| | C138 | | 00D 257 4011 905 | CE67C0J101MT (RV2) +REF | | | |
| | C139,140 | nsp | 00D 257 0512 903 | CK73F1E104ZT +1608 | | | |
| | C141 | nsp | 00D 257 0511 904 | CK73F1H103ZT +1608 | | | |
| | C148,149 | | 00D 257 2017 901 | CS77B0J101MT(SK8) | | | |

| Ref. No. | nsp | Part No. | Part Name | Remarks | Q'ty | New |
|---|---|---|---|---|---|---|
| C150 | nsp | 00D 257 0512 903 | CK73F1E104ZT +1608 | | | |
| C151 | | 00D 257 4012 933 | CE67C1C101MT (RV2) +REF | | | |
| C152 | | 00D 257 4012 920 | CE67C1C470MT (RV2) +REF | | | |
| C155 | nsp | 00D 257 0512 903 | CK73F1E104ZT +1608 | | | |
| C156,157 | | 00D 257 4012 917 | CE67C1C220MT (RV2) +REF | | | |
| C160 | | 00D 257 4012 920 | CE67C1C470MT (RV2) +REF | | | |
| C163 | nsp | 00D 257 0508 917 | CC73CH1H471JT +1608 | | | |
| C164 | | 00D 257 4012 917 | CE67C1C220MT (RV2) +REF | | | |
| C165 | nsp | 00D 257 0512 903 | CK73F1E104ZT +1608 | | | |
| C166 | | 00D 257 4012 920 | CE67C1C470MT (RV2) +REF | | | |
| C167 | nsp | 00D 257 0512 903 | CK73F1E104ZT +1608 | | | |
| C170 | | 00D 257 4012 920 | CE67C1C470MT (RV2) +REF | | | |
| C171 | | 00D 257 4012 917 | CE67C1C220MT (RV2) +REF | | | |
| C172 | nsp | 00D 257 0501 901 | CK73B1H103KT (1608) +1608 | | | |
| C174 | | 00D 257 4012 917 | CE67C1C220MT (RV2) +REF | | | |
| C175 | nsp | 00D 257 0512 903 | CK73F1E104ZT +1608 | | | |
| C176 | | 00D 257 4012 917 | CE67C1C220MT (RV2) +REF | | | |
| C177 | nsp | 00D 257 0516 954 | CK73B1E104KT +1608 | | | |
| C178 | nsp | 00D 257 0520 908 | CK73B1A154KT +1608 | | | |
| C179 | nsp | 00D 257 0516 954 | CK73B1E104KT +1608 | | | |
| C180 | nsp | 00D 257 0516 925 | CK73B1E333KT +1608 | | | |
| C181 | nsp | 00D 257 0512 903 | CK73F1E104ZT +1608 | | | |
| C182 | nsp | 00D 257 0506 951 | CC73CH1H101JT +1608 | | | |
| C183 | nsp | 00D 257 0501 930 | CK73B1H183KT | | | |
| C184,185 | nsp | 00D 257 0512 903 | CK73F1E104ZT +1608 | | | |
| C186 | nsp | 00D 257 0521 907 | CK73B1A105KT +1608 | | | |
| C187-189 | nsp | 00D 257 0512 903 | CK73F1E104ZT +1608 | | | |
| C190 | | 00D 254 4655 922 | CE67C0J470MT (RV2) +REF | | | |
| C191-195 | nsp | 00D 257 0512 903 | CK73F1E104ZT +1608 | | | |
| C196 | | 00D 257 2017 901 | CS77B0J101MT(SK8) | | | |
| C197 | nsp | 00D 257 0516 954 | CK73B1E104KT +1608 | | | |
| C198,199 | nsp | 00D 257 0511 904 | CK73F1H103ZT +1608 | | | |
| C200 | nsp | 00D 257 0512 903 | CK73F1E104ZT +1608 | | | |
| C201,202 | nsp | 00D 257 0516 954 | CK73B1E104KT +1608 | | | |
| C203 | | 00D 257 4011 905 | CE67C0J101MT (RV2) +REF | | | |
| C204 | nsp | 00D 257 0516 954 | CK73B1E104KT +1608 | | | |
| C205-207 | nsp | 00D 257 0512 903 | CK73F1E104ZT +1608 | | | |
| C208 | | 00D 257 4011 905 | CE67C0J101MT (RV2) +REF | | | |
| C209 | nsp | 00D 257 0516 954 | CK73B1E104KT +1608 | | | |
| C210 | nsp | 00D 257 0520 911 | CK73B1A224KT +1608 | | | |
| C211 | nsp | 00D 257 0512 903 | CK73F1E104ZT +1608 | | | |
| C212,213 | nsp | 00D 257 0506 951 | CC73CH1H101JT +1608 | | | |
| C214 | | 00D 257 4011 905 | CE67C0J101MT (RV2) +REF | | | |
| C215,216 | nsp | 00D 257 0512 903 | CK73F1E104ZT +1608 | | | |
| C217 | nsp | 00D 257 0509 929 | CK73B1H102KT +1608 | | | |
| C218-220 | nsp | 00D 257 0512 903 | CK73F1E104ZT +1608 | | | |
| C221 | nsp | 00D 257 0511 904 | CK73F1H103ZT +1608 | | | |
| C222 | nsp | 00D 257 0503 967 | CC73CH1H150JT +1608 | | | |
| C223-225 | nsp | 00D 257 0512 903 | CK73F1E104ZT +1608 | | | |
| C227 | nsp | 00D 257 0503 967 | CC73CH1H150JT +1608 | | | |
| C228 | nsp | 00D 257 0512 903 | CK73F1E104ZT +1608 | | | |
| C229 | nsp | 00D 257 0511 904 | CK73F1H103ZT +1608 | | | |
| C230-232 | nsp | 00D 257 0512 903 | CK73F1E104ZT +1608 | | | |
| C236,237 | nsp | 00D 257 0512 903 | CK73F1E104ZT +1608 | | | |
| C238,239 | nsp | 00D 257 0509 929 | CK73B1H102KT +1608 | | | |
| C240 | nsp | 00D 257 0512 903 | CK73F1E104ZT +1608 | | | |
| C241 | nsp | 00D 257 0509 929 | CK73B1H102KT +1608 | | | |
| C242-250 | nsp | 00D 257 0512 903 | CK73F1E104ZT +1608 | | | |

| | Ref. No. | nsp | Part No. | Part Name | Remarks | Q'ty | New |
|---|---|---|---|---|---|---|---|
| | C251 | | 00D 257 4011 905 | CE67C0J101MT (RV2) +REF | | | |
| | C252-256 | nsp | 00D 257 0512 903 | CK73F1E104ZT +1608 | | | |
| | C257 | nsp | 00D 257 0506 951 | CC73CH1H101JT +1608 | | | |
| | C258 | nsp | 00D 257 0512 903 | CK73F1E104ZT +1608 | | | |
| | C259 | nsp | 00D 257 0506 951 | CC73CH1H101JT +1608 | | | |
| | C260,261 | nsp | 00D 257 0512 903 | CK73F1E104ZT +1608 | | | |
| | C262 | | 00D 257 4011 905 | CE67C0J101MT (RV2) +REF | | | |
| | C264-266 | nsp | 00D 257 0520 911 | CK73B1A224KT +1608 | | | |
| | C267 | nsp | 00D 257 0516 954 | CK73B1E104KT +1608 | | | |
| | C268 | | 00D 257 4011 905 | CE67C0J101MT (RV2) +REF | | | |
| | C269-272 | nsp | 00D 257 0512 903 | CK73F1E104ZT +1608 | | | |
| | C273 | | 00D 257 4011 905 | CE67C0J101MT (RV2) +REF | | | |
| | C274-277 | nsp | 00D 257 0512 903 | CK73F1E104ZT +1608 | | | |
| | C281 | nsp | 00D 257 0512 903 | CK73F1E104ZT +1608 | | | |
| | C282 | nsp | 00D 257 0516 954 | CK73B1E104KT +1608 | | | |
| | C305 | nsp | 00D 257 0512 903 | CK73F1E104ZT +1608 | | | |
| | C396 | nsp | 00D 257 0509 929 | CK73B1H102KT +1608 | | | |
| | C397 | nsp | 00D 257 0512 903 | CK73F1E104ZT +1608 | | | |
| | C398 | nsp | 00D 257 0509 929 | CK73B1H102KT +1608 | | | |
| | C399 | nsp | 00D 257 0512 903 | CK73F1E104ZT +1608 | | | |
| | C405 | nsp | 00D 257 0512 903 | CK73F1E104ZT +1608 | | | |
| | C406 | nsp | 00D 257 0509 929 | CK73B1H102KT +1608 | | | |
| | C407-411 | nsp | 00D 257 0512 903 | CK73F1E104ZT +1608 | | | |
| | C412 | | 00D 257 4012 917 | CE67C1C220MT (RV2) +REF | | | |
| | C414 | nsp | 00D 257 0512 903 | CK73F1E104ZT +1608 | | | |
| | C415 | nsp | 00D 257 0511 904 | CK73F1H103ZT +1608 | | | |
| | C417 | nsp | 00D 257 0503 925 | CC73CH1H100DT +1608 | | | |
| | C418 | nsp | 00D 257 0501 901 | CK73B1H103KT (1608) +1608 | | | |
| | C419-421 | nsp | 00D 257 0512 903 | CK73F1E104ZT +1608 | | | |
| | C422,423 | nsp | 00D 257 0511 904 | CK73F1H103ZT +1608 | | | |
| | C424 | nsp | 00D 257 0512 903 | CK73F1E104ZT +1608 | | | |
| | C425 | nsp | 00D 257 0509 929 | CK73B1H102KT +1608 | | | |
| | C426,427 | nsp | 00D 257 0512 903 | CK73F1E104ZT +1608 | | | |
| | C428 | nsp | 00D 257 0509 929 | CK73B1H102KT +1608 | | | |
| | C429,430 | nsp | 00D 257 0512 903 | CK73F1E104ZT +1608 | | | |
| | C431 | | 00D 257 4011 905 | CE67C0J101MT (RV2) +REF | | | |
| | C432-438 | nsp | 00D 257 0512 903 | CK73F1E104ZT +1608 | | | |
| | C439 | | 00D 257 4011 905 | CE67C0J101MT (RV2) +REF | | | |
| | C440 | nsp | 00D 257 0511 904 | CK73F1H103ZT +1608 | | | |
| | C441 | nsp | 00D 257 0512 903 | CK73F1E104ZT +1608 | | | |
| | C442 | nsp | 00D 257 0509 929 | CK73B1H102KT +1608 | | | |
| | C443 | nsp | 00D 257 0512 903 | CK73F1E104ZT +1608 | | | |
| | C444 | nsp | 00D 257 0511 904 | CK73F1H103ZT +1608 | | | |
| | C445,446 | nsp | 00D 257 0512 903 | CK73F1E104ZT +1608 | | | |
| | C447 | nsp | 00D 257 0509 929 | CK73B1H102KT +1608 | | | |
| | C448 | nsp | 00D 257 0511 904 | CK73F1H103ZT +1608 | | | |
| | C449-454 | nsp | 00D 257 0512 903 | CK73F1E104ZT +1608 | | | |
| | C455 | | 00D 257 4011 905 | CE67C0J101MT (RV2) +REF | | | |
| | C477-479 | nsp | 00D 257 0512 903 | CK73F1E104ZT +1608 | | | |
| | C480 | nsp | 00D 257 0511 904 | CK73F1H103ZT +1608 | | | |
| | C481 | nsp | 00D 257 0512 903 | CK73F1E104ZT +1608 | | | |
| | C482 | nsp | 00D 257 0511 904 | CK73F1H103ZT +1608 | | | |
| | C483-488 | nsp | 00D 257 0512 903 | CK73F1E104ZT +1608 | | | |
| | C500,501 | nsp | 00D 257 0509 929 | CK73B1H102KT +1608 | | | |
| | C502-504 | nsp | 00D 257 0512 903 | CK73F1E104ZT +1608 | | | |
| | C505 | nsp | 00D 257 0501 901 | CK73B1H103KT (1608) +1608 | | | |
| | C506 | nsp | 00D 257 0512 903 | CK73F1E104ZT +1608 | | | |
| | C507,508 | nsp | 00D 257 0506 951 | CC73CH1H101JT +1608 | | | |

| | Ref. No. | nsp | Part No. | Part Name | Remarks | Q'ty | New |
|---|---|---|---|---|---|---|---|
| | C509 | nsp | 00D 257 0512 903 | CK73F1E104ZT +1608 | | | |
| | C511 | nsp | 00D 257 0501 901 | CK73B1H103KT (1608) +1608 | | | |
| | C512-514 | nsp | 00D 257 0512 903 | CK73F1E104ZT +1608 | | | |
| | C516 | nsp | 00D 257 0512 903 | CK73F1E104ZT +1608 | | | |
| | C517 | nsp | 00D 257 0509 903 | CK73B1H821KT +1608 | | | |
| | C518 | nsp | 00D 257 0510 921 | CK73B1H392KT +1608 | | | |
| | C519-525 | nsp | 00D 257 0512 903 | CK73F1E104ZT +1608 | | | |
| | C526,527 | nsp | 00D 257 0501 901 | CK73B1H103KT (1608) +1608 | | | |
| | C528 | nsp | 00D 257 0516 954 | CK73B1E104KT +1608 | | | |
| | C530-533 | nsp | 00D 257 0501 901 | CK73B1H103KT (1608) +1608 | | | |
| | C534 | nsp | 00D 257 0516 954 | CK73B1E104KT +1608 | | | |
| | C536 | nsp | 00D 257 0512 903 | CK73F1E104ZT +1608 | | | |
| | C553,554 | nsp | 00D 257 0512 903 | CK73F1E104ZT +1608 | | | |
| | C556 | nsp | 00D 257 0512 903 | CK73F1E104ZT +1608 | | | |
| | C600,601 | nsp | 00D 257 0512 903 | CK73F1E104ZT +1608 | | | |
| | C605 | nsp | 00D 257 0501 901 | CK73B1H103KT (1608) +1608 | | | |
| | C606,607 | nsp | 00D 257 0512 903 | CK73F1E104ZT +1608 | | | |
| | C609 | nsp | 00D 257 0509 903 | CK73B1H821KT +1608 | | | |
| | C610 | nsp | 00D 257 0512 903 | CK73F1E104ZT +1608 | | | |
| | C611 | nsp | 00D 257 0510 921 | CK73B1H392KT +1608 | | | |
| | C612-617 | nsp | 00D 257 0512 903 | CK73F1E104ZT +1608 | | | |
| | C618-623 | nsp | 00D 257 0501 901 | CK73B1H103KT (1608) +1608 | | | |
| | C624 | nsp | 00D 257 0512 903 | CK73F1E104ZT +1608 | | | |
| | C651,652 | nsp | 00D 257 0512 903 | CK73F1E104ZT +1608 | | | |
| | C657-660 | nsp | 00D 257 0512 903 | CK73F1E104ZT +1608 | | | |
| | C669-673 | nsp | 00D 257 0512 903 | CK73F1E104ZT +1608 | | | |
| | C676 | nsp | 00D 257 0512 903 | CK73F1E104ZT +1608 | | | |
| | C680 | nsp | 00D 257 0511 904 | CK73F1H103ZT +1608 | | | |
| | C681 | nsp | 00D 257 0509 929 | CK73B1H102KT +1608 | | | |
| | C696 | nsp | 00D 257 0512 903 | CK73F1E104ZT +1608 | | | |
| | C900 | | 00D 254 4655 922 | CE67C0J470MT (RV2) +REF | | | |
| | C901 | | 00D 257 2015 929 | CS77B1A220MT | | | |
| | C902-906 | | 00D 257 4011 905 | CE67C0J101MT (RV2) +REF | | | |
| | C907 | | 00D 254 4660 946 | CE67C1H010MT (RV2B55 +REF | | | |
| | C908 | | 00D 254 4655 922 | CE67C0J470MT (RV2) +REF | | | |
| | C909 | | 00D 257 4011 905 | CE67C0J101MT (RV2) +REF | | | |
| | C910 | | 00D 254 4660 946 | CE67C1H010MT (RV2B55 +REF | | | |
| | C911 | | 00D 254 4655 922 | CE67C0J470MT (RV2) +REF | | | |
| | C912 | | 00D 257 4012 917 | CE67C1C220MT (RV2) +REF | | | |
| | C913 | | 00D 254 4655 977 | CE67C0J102MT (RV) +REF | | | |
| | C914 | | 00D 257 4011 905 | CE67C0J101MT (RV2) +REF | | | |
| | C915 | | 00D 254 4655 977 | CE67C0J102MT (RV) +REF | | | |
| | C916 | | 00D 257 4011 905 | CE67C0J101MT (RV2) +REF | | | |
| | C917 | | 00D 254 4655 977 | CE67C0J102MT (RV) +REF | | | |
| | C918 | | 00D 257 4011 905 | CE67C0J101MT (RV2) +REF | | | |
| | C920 | | 00D 257 4012 917 | CE67C1C220MT (RV2) +REF | | | |
| | C921 | | 00D 257 4011 905 | CE67C0J101MT (RV2) +REF | | | |
| | C922 | | 00D 257 4012 917 | CE67C1C220MT (RV2) +REF | | | |
| | C928 | | 00D 257 4011 905 | CE67C0J101MT (RV2) +REF | | | |
| | C930-934 | | 00D 257 4011 905 | CE67C0J101MT (RV2) +REF | | | |
| | C935-937 | | 00D 254 4660 946 | CE67C1H010MT (RV2B55 +REF | | | |
| | C938 | | 00D 257 4012 917 | CE67C1C220MT (RV2) +REF | | | |
| | C939 | | 00D 257 4011 905 | CE67C0J101MT (RV2) +REF | | | |
| | C940 | | 00D 257 4012 917 | CE67C1C220MT (RV2) +REF | | | |
| | C941 | | 00D 257 4011 905 | CE67C0J101MT (RV2) +REF | | | |
| | C942 | | 00D 257 4012 917 | CE67C1C220MT (RV2) +REF | | | |
| | C943 | | 00D 257 4011 905 | CE67C0J101MT (RV2) +REF | | | |
| | C944 | | 00D 257 4012 917 | CE67C1C220MT (RV2) +REF | | | |

| Ref. No. | nsp | Part No. | Part Name | Remarks | Q'ty | New |
|---|---|---|---|---|---|---|
| C945 | | 00D 257 4012 904 | CE67C1C100MT (RV2B55 +REF | | | |
| C946,947 | | 00D 257 4011 905 | CE67C0J101MT (RV2) +REF | | | |
| C948 | | 00D 257 4012 917 | CE67C1C220MT (RV2) +REF | | | |
| C949 | | 00D 257 4011 905 | CE67C0J101MT (RV2) +REF | | | |
| C951-954 | | 00D 257 4012 920 | CE67C1C470MT (RV2) +REF | | | |
| C955-959 | | 00D 257 4011 905 | CE67C0J101MT (RV2) +REF | | | |
| C960 | | 00D 257 4012 917 | CE67C1C220MT (RV2) +REF | | | |
| C962 | | 00D 257 4011 905 | CE67C0J101MT (RV2) +REF | | | |
| C963 | | 00D 257 4012 917 | CE67C1C220MT (RV2) +REF | | | |
| C984,985 | | 00D 257 4012 917 | CE67C1C220MT (RV2) +REF | | | |
| C986,987 | nsp | 00D 257 0512 903 | CK73F1E104ZT +1608 | | | |
| C988 | | 00D 257 4012 917 | CE67C1C220MT (RV2) +REF | | | |
| C990-992 | nsp | 00D 257 0512 903 | CK73F1E104ZT +1608 | | | |
| C995,996 | nsp | 00D 257 0512 903 | CK73F1E104ZT +1608 | | | |
| | | | | | | |
| **OTHERS PARTS GROUP** | | | | | | |
| AS601,602 | | - | M3-SCREW-TERMINAL08R | | | |
| CX053 | nsp | 00D 205 0355 059 | 5P KR CON BASE(L) | | | |
| CX062 | nsp | 00D 205 1323 064 | 6P PIN HEADER(9120) | | | |
| CX122 | nsp | 00D 205 1386 085 | 12P BASE(9115B-PT1) | | | |
| CX125 | nsp | 00D 205 1386 085 | 12P BASE(9115B-PT1) | | | |
| CX151 | nsp | 00D 205 1224 930 | 15P FFC BASE(9616A) | | | |
| CX161 | nsp | 00D 205 1324 063 | 16P PIN HEADER(9120) | | | |
| CX211 | nsp | 00D 205 1346 009 | 21P 1.25FJ CONN.BASE | | | |
| CX212 | nsp | 00D 205 1334 011 | 21P-FFC-BASE(9615A) | | | |
| CX241 | nsp | 00D 205 1264 916 | 24P-FFC-BASE(9631SG) | | | |
| CX331 | nsp | 00D 205 1334 008 | 33P-FFC-BASE (P=1) | | | |
| | | | | | | |
| CY062 | nsp | 00D 205 1325 062 | 6P SOCKET(9120) | | | |
| CY071 | nsp | 00D 205 0355 075 | 7P KR CON BASE(L) | | | |
| CY123 | nsp | 00D 205 1324 021 | 12P PIN HEADER(9120) | | | |
| CY132 | nsp | 00D 205 0480 034 | 13P KR CON BASE(L) | | | |
| CY162 | nsp | 00D 205 1324 063 | 16P PIN HEADER(9120) | | | |
| CY211 | | 00D 205 1345 000 | 21P 1.25FJ CONN.PLUG | | | |
| | | | | | | |
| FB101 | | 00D 235 0136 907 | FBMJ1608HS280NT +1608 | | | |
| FB103-107 | | 00D 235 0136 907 | FBMJ1608HS280NT +1608 | | | |
| FB150 | | 00D 235 0130 903 | CHIP EMIFIL(11A121) +1608 | | | |
| FB155,156 | | 00D 235 0130 903 | CHIP EMIFIL(11A121) +1608 | | | |
| FB159-161 | nsp | 00D 247 2018 903 | RM73B--0R0KT +1608 | | | |
| FB652-655 | | 00D 235 0130 903 | CHIP EMIFIL(11A121) +1608 | | | |
| | | | | | | |
| JK703 | | 00D 205 1395 005 | 1P S-TERMINAL-LF | | | |
| JK705-708 | | 00D 204 8728 009 | 1P PIN JACK(BK)-LF | | | |
| JK853 | | 00D 205 1332 000 | 3P BNC CONNECTOR(AU) | | | |
| | | | | | | |
| L150 | | 00D 235 0125 905 | INDUCTOR(FLC32C220K)+3216 | | | |
| L154-156 | | 00D 235 0074 933 | INDUCTOR(101)ST | | | |
| L157,158 | | 00D 235 0125 905 | INDUCTOR(FLC32C220K)+3216 | | | |
| L502-504 | | 00D 235 0125 905 | INDUCTOR(FLC32C220K)+3216 | | | |
| L552-554 | | 00D 235 0125 905 | INDUCTOR(FLC32C220K)+3216 | | | |
| L652-654 | | 00D 235 0125 905 | INDUCTOR(FLC32C220K)+3216 | | | |
| | | | | | | |
| X150 | | 00D 399 0596 003 | XTAL(27MHZ) | | | |

## 00DGU-3750A POWER/DISPLAY P.W.B. UNIT ASS'Y

| | Ref. No. | nsp | Part No. | Part Name | Remarks | Q'ty | New |
|---|---|---|---|---|---|---|---|
| **SEMICONDUCTORS GROUP** | | | | | | | |
| | IC101 | | 00D 262 3606 902 | PT6302-R-001(L) | | | |
| | IC102 | | 00D 262 3602 003 | GP1UE271XKVF | | | |
| | IC108 | | 00D 269 0222 005 | GP1FA52HTZ0F | | | |
| | IC901 | | 00D 265 0123 005 | TOP246YN | | | |
| | IC902 | | 00D 263 1256 904 | TA76432S(TPE6,F) | | | |
| | IC903 | | 00D 263 1100 005 | KIA7805API | | | |
| | IC904 | | 00D 262 2580 906 | CXA1511M +C | | | |
| | IC905 | | 00D 262 2114 903 | UPD4721GS-GJG +C | | | |
| | IC906 | | 00D 262 3047 008 | PC123Y22 | | | |
| | IC907,908 | | 00D 263 1256 904 | TA76432S(TPE6,F) | | | |
| | IC909 | | 00D 262 3277 904 | SN74LVC157APW-EL2 +C | | | |
| | IC910 | | 00D 263 1100 021 | KIA7812API | | | |
| | TR101,102 | | 00D 269 0082 902 | DTC114EKT96 +C | | | |
| | TR103,104 | | 00D 271 0308 906 | 2SA933ASTPS | | | |
| | TR105-111 | | 00D 269 0082 902 | DTC114EKT96 +C | | | |
| | TR121 | | 00D 273 0487 904 | 2SC2412K_T146R | | | |
| | TR901 | | 00D 271 0308 906 | 2SA933ASTPS | | | |
| | TR902 | | 00D 272 0170 001 | 2SB1268(R/S) | | | |
| | TR904 | | 00D 272 0083 004 | 2SB1185(E/F) | | | |
| | TR905 | | 00D 274 0036 905 | 2SD468(C)TF | | | |
| | TR907 | | 00D 269 0083 901 | DTA114EKT96 +C | | | |
| | TR908,909 | | 00D 269 0082 902 | DTC114EKT96 +C | | | |
| | TR910 | | 00D 275 0115 900 | RSS100N03TB | | | |
| | TR911 | | 00D 269 0055 900 | DTA144EKT96 +C | | | |
| | TR912 | | 00D 269 0054 901 | DTC144EKT96 +C | | | |
| | TR913,914 | | 00D 274 0209 004 | 2SC5370 | | | |
| | TR915,916 | | 00D 271 0308 906 | 2SA933ASTPS | | | |
| | TR917 | | 00D 273 0303 910 | 2SC1740S(S)-T | | | |
| | D101-109 | | 00D 276 0401 905 | 1SS133T77 (TAPE) | | | |
| | D901-904 | | 00D 276 0729 904 | EM01AT (V1) | | | |
| | D906 | | 00D 276 0401 905 | 1SS133T77 (TAPE) | | | |
| | D907 | | 00D 276 0813 001 | AP01C | | | |
| | D908 | | 00D 276 0818 006 | FMJ-2303 | | | |
| | D909 | | 00D 276 0401 905 | 1SS133T77 (TAPE) | | | |
| | D910 | | 00D 276 0803 008 | FMB-G19L | | | |
| | D911 | | 00D 276 0730 906 | AG01ZT (V1) | | | |
| | D914 | | 00D 276 0730 906 | AG01ZT (V1) | | | |
| | D915 | | 00D 276 0401 905 | 1SS133T77 (TAPE) | | | |
| | D921 | | 00D 276 0401 905 | 1SS133T77 (TAPE) | | | |
| | D922 | | 00D 276 0842 904 | RB551V-30TE-17 | | | * |
| | D923-925 | | 00D 276 0401 905 | 1SS133T77 (TAPE) | | | |
| | D926 | | 00D 276 0730 906 | AG01ZT (V1) | | | |
| | ZD903 | | 00D 276 0762 945 | MTZJ36B T77 | | | |
| | ZD904 | | 00D 276 0760 921 | MTZJ4.3B T77 | | | |
| | ZD905 | | 00D 276 0760 947 | MTZJ5.1B T77 | | | |
| | LD101,102 | | 00D 393 9576 903 | SELU1E10CXM-002 | | | |
| | LD103 | | 00D 393 9645 009 | SML1216W(D) | | | |
| | LD104,105 | | 00D 393 9576 903 | SELU1E10CXM-002 | | | |
| | LD106-108 | | 00D 393 9452 904 | SEL1410E(TP2) | | | |

| | Ref. No. | nsp | Part No. | Part Name | Remarks | Q'ty | New |
|---|---|---|---|---|---|---|---|
| | TH901 | | 00D 279 0044 002 | NTH11D8R0LA | | | |
| | FL101 | | 00D 393 8078 004 | FL TUBE(15-BT-97GNK) | | | |
| **RESISTORS GROUP** | | | | | | | |
| | R908 | | 00D 244 2675 729 | RS14B3D224JNBF (ERG) | | | |
| | R916 | | 00D 247 2023 914 | RM73B--103DT(1608) +1608 | | | |
| | R917 | | 00D 247 2023 927 | RM73B--1652DT(1608) +1608 | | | |
| | R918 | | 00D 244 2055 912 | RS14B3AR47JNBST(S) | | | |
| | R919 | | 00D 244 2681 904 | RS14B3A1R5JNBST(S) | | | |
| | R926 | | 00D 244 2052 973 | RS14B3A561JNBST(S) | | | |
| | R929 | | 00D 244 2050 991 | RS14B3A682JNBST(S) | | | |
| | R930 | | 00D 244 2052 973 | RS14B3A561JNBST(S) | | | |
| | R938 | | 00D 244 2051 929 | RS14B3A821JNBST(S) | | | |
| | R940 | | 00D 241 2315 938 | RD14B2E330GFRST | | | |
| | R955,956 | | 00D 244 2052 973 | RS14B3A561JNBST(S) | | | |
| | R960,961 | | 00D 247 2023 914 | RM73B--103DT(1608) +1608 | | | |
| | R962-964 | | 00D 244 2690 908 | RS14B3A120JNBST(S) | | | |
| | R967 | | 00D 247 2023 930 | RM73B--242DT(1608) +1608 | | | |
| | R968 | | 00D 247 2023 914 | RM73B--103DT(1608) +1608 | | | |
| | R969-974 | | 00D 244 2055 912 | RS14B3AR47JNBST(S) | | | |
| | R982-985 | | 00D 244 2681 904 | RS14B3A1R5JNBST(S) | | | |
| | R988 | | 00D 244 2055 912 | RS14B3AR47JNBST(S) | | | |
| | | | | | | | |
| **CAPACITORS GROUP** | | | | | | | |
| | C101 | nsp | 00D 257 0512 903 | CK73F1E104ZT +1608 | | | |
| | C102 | nsp | 00D 257 0511 904 | CK73F1H103ZT +1608 | | | |
| | C103 | | 00D 254 4300 963 | CE04W0J101MT(SRE) | | | |
| | C104 | nsp | 00D 257 0512 903 | CK73F1E104ZT +1608 | | | |
| | C105 | nsp | 00D 257 0504 966 | CC73CH1H390JT +1608 | | | |
| | C106 | | 00D 254 4300 947 | CE04W0J470MT(SRE) | | | |
| | C107-109 | nsp | 00D 257 0512 903 | CK73F1E104ZT +1608 | | | |
| | C111 | nsp | 00D 257 0511 904 | CK73F1H103ZT +1608 | | | |
| | C121-124 | nsp | 00D 257 0501 901 | CK73B1H103KT (1608) +1608 | | | |
| | C125 | nsp | 00D 257 0511 904 | CK73F1H103ZT +1608 | | | |
| | C126 | nsp | 00D 257 0509 929 | CK73B1H102KT +1608 | | | |
| | C192 | nsp | 00D 254 4538 900 | CE04W1C100MT SMG/RE3 | | | |
| | C194 | nsp | 00D 254 4524 943 | CE04W1H010MT SMG/RE3 | | | |
| | C202 | nsp | 00D 257 0511 904 | CK73F1H103ZT +1608 | | | |
| | C901 | | 00D 256 8038 004 | CF99--2EAC104M | | | |
| | C902,903 | | 00D 253 8029 713 | CK45F2EAC471KC(KX) | | | |
| | C904 | | 00D 254 4589 713 | CE04W2G101MC(KMG) | | | |
| | C905,906 | | 00D 253 8029 713 | CK45F2EAC471KC(KX) | | | |
| | C907 | nsp | 00D 254 4525 913 | CE04W1H470MT SMG/RE3 | | | |
| | C909 | nsp | 00D 254 4525 913 | CE04W1H470MT SMG/RE3 | | | |
| | C910 | | 00D 256 8038 004 | CF99--2EAC104M | | | |
| | C912 | | 00D 253 8029 713 | CK45F2EAC471KC(KX) | | | |
| | C913,914 | | 00D 254 4713 709 | CE04W1E102MC J30(KY) | | | |
| | C916,917 | | 00D 254 4770 700 | CE04W0J562MC(KY)K35 | | | |
| | C918 | | 00D 254 4675 902 | CE04W2A220MT(KMF) | | | |
| | C919 | | 00D 254 4770 700 | CE04W0J562MC(KY)K35 | | | |
| | C920,921 | | 00D 254 4651 900 | CE04W0J331MT(KY)E11 | | | |
| | C922 | | 00D 254 4770 700 | CE04W0J562MC(KY)K35 | | | |
| | C923 | nsp | 00D 254 4538 900 | CE04W1C100MT SMG/RE3 | | | |

| | Ref. No. | nsp | Part No. | Part Name | Remarks | Q'ty | New |
|---|---|---|---|---|---|---|---|
| | C925 | | 00D 254 4536 957 | CE04W1A471MT SMG/RE3 | | | |
| | C926 | | 00D 254 4542 705 | CE04W1E471MC SMG/RE3 | | | |
| | C927 | | 00D 254 4536 957 | CE04W1A471MT SMG/RE3 | | | |
| | C929 | nsp | 00D 254 4538 955 | CE04W1C221MT SMG/RE3 | | | |
| | C930 | nsp | 00D 257 0512 903 | CK73F1E104ZT +1608 | | | |
| | C931 | nsp | 00D 257 0511 920 | CK73F1H473ZT +1608 | | | |
| | C932 | nsp | 00D 254 4538 900 | CE04W1C100MT SMG/RE3 | | | |
| | C935,936 | nsp | 00D 257 0512 903 | CK73F1E104ZT +1608 | | | |
| | C937 | nsp | 00D 254 4538 900 | CE04W1C100MT SMG/RE3 | | | |
| | C938 | nsp | 00D 257 0506 951 | CC73CH1H101JT +1608 | | | |
| | C939 | nsp | 00D 257 0511 904 | CK73F1H103ZT +1608 | | | |
| | C940 | nsp | 00D 254 4538 900 | CE04W1C100MT SMG/RE3 | | | |
| | C941-943 | nsp | 00D 254 4524 901 | CE04W1H0R1MT SMG/RE3 | | | |
| | C944 | nsp | 00D 254 4533 921 | CE04W0J101MT SMG/RE3 | | | |
| | C945 | nsp | 00D 257 0512 903 | CK73F1E104ZT +1608 | | | |
| | C946 | nsp | 00D 254 4538 939 | CE04W1C470MT SMG/RE3 | | | |
| | C947 | nsp | 00D 257 0511 904 | CK73F1H103ZT +1608 | | | |
| | C948 | nsp | 00D 254 4524 943 | CE04W1H010MT SMG/RE3 | | | |
| | C949,950 | nsp | 00D 254 4524 901 | CE04W1H0R1MT SMG/RE3 | | | |
| | C952-954 | nsp | 00D 257 0512 903 | CK73F1E104ZT +1608 | | | |
| | C955 | | 00D 254 4770 700 | CE04W0J562MC(KY)K35 | | | |
| | C956 | nsp | 00D 257 0512 903 | CK73F1E104ZT +1608 | | | |
| | C958 | nsp | 00D 257 0512 903 | CK73F1E104ZT +1608 | | | |
| | C959 | nsp | 00D 257 0511 904 | CK73F1H103ZT +1608 | | | |
| | C960 | nsp | 00D 257 0512 903 | CK73F1E104ZT +1608 | | | |
| | C961 | nsp | 00D 257 0506 951 | CC73CH1H101JT +1608 | | | |
| ⚠ | C962 | | 00D 253 8022 707 | CK45F2EAC103MC | | | |
| | C963 | nsp | 00D 257 0509 929 | CK73B1H102KT +1608 | | | |
| | C964 | nsp | 00D 257 0506 951 | CC73CH1H101JT +1608 | | | |
| | C965 | nsp | 00D 257 0509 929 | CK73B1H102KT +1608 | | | |
| | C966 | nsp | 00D 257 0512 903 | CK73F1E104ZT +1608 | | | |
| | C967 | nsp | 00D 254 4533 921 | CE04W0J101MT SMG/RE3 | | | |
| | C968 | nsp | 00D 257 0511 904 | CK73F1H103ZT +1608 | | | |
| | C969,970 | nsp | 00D 257 0512 903 | CK73F1E104ZT +1608 | | | |
| | C977 | nsp | 00D 257 0512 903 | CK73F1E104ZT +1608 | | | |
| | C978 | nsp | 00D 254 4538 900 | CE04W1C100MT SMG/RE3 | | | |
| | C980 | nsp | 00D 257 0512 903 | CK73F1E104ZT +1608 | | | |
| | C981 | nsp | 00D 254 4538 900 | CE04W1C100MT SMG/RE3 | | | |
| | C982,983 | nsp | 00D 257 0516 954 | CK73B1E104KT +1608 | | | |
| | C984 | nsp | 00D 254 4533 921 | CE04W0J101MT SMG/RE3 | | | |
| | C985 | nsp | 00D 247 2018 903 | RM73B--0R0KT +1608 | | | |
| | C989 | nsp | 00D 257 0512 903 | CK73F1E104ZT +1608 | | | |
| | C990,991 | nsp | 00D 254 4538 900 | CE04W1C100MT SMG/RE3 | | | |
| ⚠ | C999 | | 00D 253 8022 707 | CK45F2EAC103MC | | | |
| | | | | | | | |
| **OTHERS PARTS GROUP** | | | | | | | |
| | AS901,902 | | - | RADIATOR | | | |
| | AS904 | | - | RADIATOR(PUE26) | | | |
| | | | | | | | |
| | CW031 | nsp | 00D 203 5343 057 | 3P PH-SAN CON.CORD | | | |
| | CW038 | nsp | 00D 203 5394 006 | 3P PH-SAN CON.CORD | | | |
| | CW052 | nsp | 00D 203 8549 010 | 5P PH-SAN CON.CORD | | | |
| | CW071 | nsp | 00D 204 3008 025 | 7P PH-SAN CON.CORD | | | |
| | CW132 | nsp | 00D 204 6696 023 | 13P PH-SAN CON.CORD | | | |

| | Ref. No. | nsp | Part No. | Part Name | Remarks | Q'ty | New |
|---|---|---|---|---|---|---|---|
| | CX024 | nsp | 00D 205 0581 001 | 2P VH CONNECTOR BASE | | | |
| | CX025 | nsp | 00D 205 0581 056 | 2P VH CONNECTOR BASE | | | |
| | CX026 | nsp | 00D 205 1093 006 | 2P VH CONNECTOR BASA | | | |
| | CX031 | nsp | 00D 205 0343 032 | 3P CONN.BASE(KR-PH) | | | |
| | CX044 | nsp | 00D 205 0343 045 | 4P CONN.BASE(KR-PH) | | | |
| | CX064 | nsp | 00D 205 0653 065 | 6P VH CONNECTOR BASE | | | |
| | CX122 | nsp | 00D 205 0536 027 | 12P CONNE SOCKET | | | |
| | CX123 | nsp | 00D 205 1326 029 | 12P SOCKET(9120) | | | |
| | CX125 | nsp | 00D 205 0536 027 | 12P CONNE SOCKET | | | |
| | CX128 | nsp | 00D 205 1386 085 | 12P BASE(9115B-PT1) | | | |
| | CX161,162 | nsp | 00D 205 1326 061 | 16P SOCKT(9120) | | | |
| | CY025 | nsp | 00D 205 0581 056 | 2P VH CONNECTOR BASE | | | |
| | CY052 | nsp | 00D 205 0343 058 | 5P CONN.BASE(KR-PH) | | | |
| | CY061 | nsp | 00D 205 0536 030 | 6P CONNE SOCKET | | | |
| | CY122 | nsp | 00D 205 0536 027 | 12P CONNE SOCKET | | | |
| | CY123 | nsp | 00D 205 1326 029 | 12P SOCKET(9120) | | | |
| | CY125 | nsp | 00D 205 0536 027 | 12P CONNE SOCKET | | | |
| | CY128 | nsp | 00D 205 1386 085 | 12P BASE(9115B-PT1) | | | |
| | CY161,162 | nsp | 00D 205 1326 061 | 16P SOCKT(9120) | | | |
| ⚠ | F901 | | 00D 206 1087 073 | FUSE (ET1.6A) | | | |
| | FF901 | nsp | 00D 202 0040 909 | FUSE CLIP(TAPE) | | | |
| | FH901 | nsp | 00D 202 0040 909 | FUSE CLIP(TAPE) | | | |
| | JK102 | | 00D 204 8728 009 | 1P PIN JACK(BK)-LF | | | |
| | JK901 | | 00D 205 1153 001 | 9P S SUB CONNECTOR | | | |
| | JK902 | | 00D 204 8729 008 | 2P MINI JACK | | | |
| | L901 | | 00D 235 0157 009 | PLA10AN7720R7D2B | | | |
| | L902 | | 00D 235 0142 917 | COIL LHL08TB4R7MT | | | |
| | L904,905 | | 00D 235 0142 917 | COIL LHL08TB4R7MT | | | |
| | RL901 | | 00D 214 0202 009 | RELAY DG1U TV-8 | | | |
| | S101-108 | | 00D 212 5604 910 | TACT SWITCH-TA(ALPS) | | | |
| | S109 | | 00D 212 5611 903 | TACT SWITCH(TAPE H5) | | | |
| | S111 | | 00D 212 5604 910 | TACT SWITCH-TA(ALPS) | | | |
| | S112 | | 00D 212 0525 007 | ROT.ENCODER EC11B20 | | | |
| ⚠ | S999 | | 00D 212 1030 009 | POWER SWITCH (TV-5) | | | |
| ⚠ | T901 | | 00D 233 0687 007 | SW TRANS(230) | | | |
| | W101 | | - | 1P LUG-SIN WIRE | | | |
| | W104 | | - | M3-SCREW-TERMINAL08R | | | |
| | W106 | | - | 1P LUG-SIN WIRE | | | |
| | W903,904 | | - | M3-SCREW-TERMINAL08R | | | |
| | W906,907 | | - | 1P SIN CORD ASSY | | | |
| | | nsp | 0RD 471 3303 016 | 3X6 CBS-Z | | | |
| | | nsp | 00D 461 0991 026 | RUBBER SHEET | | | |
| | | nsp | 00D 513 3827 074 | FUSE LABEL | for F901 | | |
| | | nsp | 00D 513 3827 087 | FUSE LABEL | for F901 | | |

## 00DGU-3751A AUDIO P.W.B. UNIT ASS'Y

| | Ref. No. | nsp | Part No. | Part Name | Remarks | Q'ty | New |
|---|---|---|---|---|---|---|---|
| **SEMICONDUCTORS GROUP** | | | | | | | |
| | IC102 | | 00D 262 2977 917 | BA25BC0FP-E2 | | | |
| | IC103 | | 00D 262 3588 004 | EP2C8Q208C8N | | | |
| | IC104 | | 00D 263 1205 900 | PQ012FZ01ZP +C | | | |
| | IC105 | | 00D 262 3366 912 | EPCS1-SI8-C2F6E6 | | | |
| | IC106 | | 00D 262 3380 008 | AK4101AVQ | | | |
| | IC107 | | 00D 262 3449 004 | LC89057W-VF4A | | | |
| | IC303 | | 00D 262 3589 003 | D708E001RFP250 | | | |
| | IC305 | | 00D GEN 8250 | DSP ROM SUB ASSY | MBM29LV160BE90TN | | |
| | IC306 | | 00D 263 1205 900 | PQ012FZ01ZP +C | | | |
| | IC401 | | 00D 262 3362 903 | PCM1796DBR | | | * |
| | IC402-405 | | 00D 263 0615 902 | BA15218F-DXE2 +C | | | |
| | IC406 | | 00D 262 3362 903 | PCM1796DBR | | | * |
| | IC407-410 | | 00D 263 0615 902 | BA15218F-DXE2 +C | | | |
| | IC411 | | 00D 262 3362 903 | PCM1796DBR | | | * |
| | IC412-415 | | 00D 263 0615 902 | BA15218F-DXE2 +C | | | |
| | IC701 | | 00D 263 1262 901 | PST600C-T-G | | | |
| | IC702 | | 00D 262 3362 903 | PCM1796DBR | | | * |
| | IC703,704 | | 00D 263 0615 902 | BA15218F-DXE2 +C | | | |
| | IC705,706 | | 00D 263 0896 909 | NJM2068MD-TE1 +C | | | |
| | IC707 | | 00D 262 3362 903 | PCM1796DBR | | | * |
| | IC708,709 | | 00D 263 0615 902 | BA15218F-DXE2 +C | | | |
| | IC710,711 | | 00D 263 0896 909 | NJM2068MD-TE1 +C | | | |
| | IC801 | | 00D 263 1100 021 | KIA7812API | | | |
| | IC802 | | 00D 263 1099 022 | KIA7912PI | | | |
| | TR402,403 | | 00D 269 0119 901 | DTA124EKT96(TAPE) +C | | | |
| | TR404,405 | | 00D 269 0082 902 | DTC114EKT96 +C | | | |
| | TR406,407 | | 00D 273 0460 905 | KTC2875B-RTK +C | | | |
| | TR408-413 | | 00D 269 0119 901 | DTA124EKT96(TAPE) +C | | | |
| | TR414-419 | | 00D 269 0082 902 | DTC114EKT96 +C | | | |
| | TR420-442 | | 00D 273 0460 905 | KTC2875B-RTK +C | | | |
| | TR701 | | 00D 273 0487 904 | 2SC2412K_T146R | | | |
| | TR702 | | 00D 269 0083 901 | DTA114EKT96 +C | | | |
| | TR703 | | 00D 269 0119 901 | DTA124EKT96(TAPE) +C | | | |
| | TR704 | | 00D 273 0487 904 | 2SC2412K_T146R | | | |
| | TR705 | | 00D 269 0119 901 | DTA124EKT96(TAPE) +C | | | |
| | TR706 | | 00D 269 0082 902 | DTC114EKT96 +C | | | |
| | TR707,708 | | 00D 273 0460 905 | KTC2875B-RTK +C | | | |
| | TR709 | | 00D 269 0119 901 | DTA124EKT96(TAPE) +C | | | |
| | TR710 | | 00D 269 0082 902 | DTC114EKT96 +C | | | |
| | TR711 | | 00D 269 0119 901 | DTA124EKT96(TAPE) +C | | | |
| | TR712 | | 00D 269 0082 902 | DTC114EKT96 +C | | | |
| | TR713-722 | | 00D 273 0460 905 | KTC2875B-RTK +C | | | |
| | TR723 | | 00D 269 0082 902 | DTC114EKT96 +C | | | |
| | D101,102 | | 00D 276 0717 903 | 1SS355 TE-17 +C | | | |
| | D301,302 | | 00D 276 0401 905 | 1SS133T77 (TAPE) | | | |
| | D701,702 | | 00D 276 0717 903 | 1SS355 TE-17 +C | | | |
| | D801-804 | | 00D 276 0701 003 | S2L20U-4002P7.5 | | | |
| | D805,806 | | 00D 276 0723 900 | RB721Q-40 | | | |

| | Ref. No. | nsp | Part No. | Part Name | Remarks | Q'ty | New |
|---|---|---|---|---|---|---|---|
| **RESISTORS GROUP** | | | | | | | |
| | R585-591 | | 00D 241 2465 985 | RD14B2E151JT(AMRS) | | | |
| | R594 | | 00D 241 2465 985 | RD14B2E151JT(AMRS) | | | |
| | R597,598 | | 00D 241 2465 985 | RD14B2E151JT(AMRS) | | | |
| | R602 | | 00D 241 2465 985 | RD14B2E151JT(AMRS) | | | |
| | R721 | | 00D 244 2052 986 | RS14B3A751JNBST(S) | | | |
| | R751,752 | | 00D 244 2052 986 | RS14B3A751JNBST(S) | | | |
| | R768-775 | | 00D 241 2467 954 | RD14B2E751JT(AMRS) | | | |
| | R851 | | 00D 244 2051 974 | RS14B3A102JNBST(S) | | | |
| | R852 | | 00D 244 2043 940 | RS14B3A222JNBST(S) | | | |
| | RR500 | | 00D 241 2465 985 | RD14B2E151JT(AMRS) | | | |
| | RR733,734 | | 00D 241 2465 985 | RD14B2E151JT(AMRS) | | | |
| | RR739 | | 00D 241 2465 985 | RD14B2E151JT(AMRS) | | | |
| | RR742 | | 00D 241 2465 985 | RD14B2E151JT(AMRS) | | | |
| **CAPACITORS GROUP** | | | | | | | |
| | C101 | nsp | 00D 257 0511 904 | CK73F1H103ZT +1608 | | | |
| | C103 | nsp | 00D 257 0511 904 | CK73F1H103ZT +1608 | | | |
| | C104 | nsp | 00D 257 0512 903 | CK73F1E104ZT +1608 | | | |
| | C106 | nsp | 00D 257 0512 903 | CK73F1E104ZT +1608 | | | |
| | C107 | nsp | 00D 257 0509 929 | CK73B1H102KT +1608 | | | |
| | C108 | nsp | 00D 257 0512 903 | CK73F1E104ZT +1608 | | | |
| | C109-115 | nsp | 00D 257 0509 929 | CK73B1H102KT +1608 | | | |
| | C116 | nsp | 00D 257 0512 903 | CK73F1E104ZT +1608 | | | |
| | C117 | nsp | 00D 254 4538 900 | CE04W1C100MT SMG/RE3 | | | |
| | C118,119 | nsp | 00D 257 0512 903 | CK73F1E104ZT +1608 | | | |
| | C120 | nsp | 00D 257 0516 954 | CK73B1E104KT +1608 | | | |
| | C121,122 | nsp | 00D 257 0509 929 | CK73B1H102KT +1608 | | | |
| | C123 | nsp | 00D 257 0512 903 | CK73F1E104ZT +1608 | | | |
| | C124-129 | nsp | 00D 257 0509 929 | CK73B1H102KT +1608 | | | |
| | C130 | nsp | 00D 257 0511 904 | CK73F1H103ZT +1608 | | | |
| | C131 | | 00D 254 4693 939 | CE04W1H101MT(RF0) | | | |
| | C132 | nsp | 00D 257 0512 903 | CK73F1E104ZT +1608 | | | |
| | C133 | nsp | 00D 257 0511 904 | CK73F1H103ZT +1608 | | | |
| | C134 | nsp | 00D 257 0512 903 | CK73F1E104ZT +1608 | | | |
| | C135 | nsp | 00D 257 0511 904 | CK73F1H103ZT +1608 | | | |
| | C136,137 | nsp | 00D 257 0512 903 | CK73F1E104ZT +1608 | | | |
| | C138 | nsp | 00D 257 0509 929 | CK73B1H102KT +1608 | | | |
| | C139 | nsp | 00D 257 0511 904 | CK73F1H103ZT +1608 | | | |
| | C140 | nsp | 00D 257 0512 903 | CK73F1E104ZT +1608 | | | |
| | C141,142 | nsp | 00D 257 0509 929 | CK73B1H102KT +1608 | | | |
| | C143 | nsp | 00D 257 0516 954 | CK73B1E104KT +1608 | | | |
| | C144 | nsp | 00D 257 0509 929 | CK73B1H102KT +1608 | | | |
| | C149 | nsp | 00D 257 0511 904 | CK73F1H103ZT +1608 | | | |
| | C150 | nsp | 00D 254 4538 900 | CE04W1C100MT SMG/RE3 | | | |
| | C151 | | 00D 254 4533 950 | CE04W0J471MT SMG/RE3 | | | |
| | C152 | nsp | 00D 257 0512 903 | CK73F1E104ZT +1608 | | | |
| | C153-158 | nsp | 00D 257 0509 929 | CK73B1H102KT +1608 | | | |
| | C159 | nsp | 00D 257 0512 903 | CK73F1E104ZT +1608 | | | |
| | C160 | nsp | 00D 257 0509 929 | CK73B1H102KT +1608 | | | |
| | C161 | nsp | 00D 257 0512 903 | CK73F1E104ZT +1608 | | | |
| | C162 | nsp | 00D 254 4538 900 | CE04W1C100MT SMG/RE3 | | | |
| | C163 | nsp | 00D 257 0516 954 | CK73B1E104KT +1608 | | | |
| | C164 | nsp | 00D 257 0509 929 | CK73B1H102KT +1608 | | | |

| Ref. No. | nsp | Part No. | Part Name | Remarks | Q'ty | New |
|---|---|---|---|---|---|---|
| C165 | nsp | 00D 254 4533 921 | CE04W0J101MT SMG/RE3 | | | |
| C170 | nsp | 00D 257 0509 929 | CK73B1H102KT +1608 | | | |
| C171 | nsp | 00D 257 0512 903 | CK73F1E104ZT +1608 | | | |
| C172 | nsp | 00D 254 4533 921 | CE04W0J101MT SMG/RE3 | | | |
| C173 | nsp | 00D 257 0512 903 | CK73F1E104ZT +1608 | | | |
| C174 | nsp | 00D 257 0509 929 | CK73B1H102KT +1608 | | | |
| C175 | nsp | 00D 257 0516 954 | CK73B1E104KT +1608 | | | |
| C176 | nsp | 00D 257 0512 903 | CK73F1E104ZT +1608 | | | |
| C177 | nsp | 00D 257 0516 909 | CK73B1E223KT +1608 | | | |
| C178 | nsp | 00D 257 0516 954 | CK73B1E104KT +1608 | | | |
| C179,180 | nsp | 00D 257 0512 903 | CK73F1E104ZT +1608 | | | |
| C181 | nsp | 00D 257 0511 904 | CK73F1H103ZT +1608 | | | |
| C182 | nsp | 00D 257 0509 929 | CK73B1H102KT +1608 | | | |
| C183 | nsp | 00D 257 0502 955 | CC73CH1H3R0CT +1608 | | | |
| C184 | nsp | 00D 257 0509 929 | CK73B1H102KT +1608 | | | |
| C185 | nsp | 00D 257 0502 955 | CC73CH1H3R0CT +1608 | | | |
| C186-188 | nsp | 00D 257 0512 903 | CK73F1E104ZT +1608 | | | |
| C189 | nsp | 00D 257 0511 904 | CK73F1H103ZT +1608 | | | |
| C190 | nsp | 00D 257 0509 929 | CK73B1H102KT +1608 | | | |
| C218 | nsp | 00D 257 0511 904 | CK73F1H103ZT +1608 | | | |
| C219 | nsp | 00D 257 0512 903 | CK73F1E104ZT +1608 | | | |
| C220 | nsp | 00D 257 0511 904 | CK73F1H103ZT +1608 | | | |
| C221 | nsp | 00D 257 0512 903 | CK73F1E104ZT +1608 | | | |
| C222 | nsp | 00D 257 0511 904 | CK73F1H103ZT +1608 | | | |
| C223 | nsp | 00D 257 0512 903 | CK73F1E104ZT +1608 | | | |
| C224 | nsp | 00D 257 0511 904 | CK73F1H103ZT +1608 | | | |
| C225 | nsp | 00D 257 0512 903 | CK73F1E104ZT +1608 | | | |
| C226 | nsp | 00D 257 0511 904 | CK73F1H103ZT +1608 | | | |
| C227,228 | nsp | 00D 257 0512 903 | CK73F1E104ZT +1608 | | | |
| C229 | nsp | 00D 257 0511 904 | CK73F1H103ZT +1608 | | | |
| C230 | nsp | 00D 254 4533 921 | CE04W0J101MT SMG/RE3 | | | |
| C231 | nsp | 00D 257 0509 929 | CK73B1H102KT +1608 | | | |
| C232 | nsp | 00D 257 0512 903 | CK73F1E104ZT +1608 | | | |
| C233 | | 00D 257 2015 929 | CS77B1A220MT | | | |
| C301 | nsp | 00D 257 0512 903 | CK73F1E104ZT +1608 | | | |
| C302 | nsp | 00D 257 0509 929 | CK73B1H102KT +1608 | | | |
| C303 | nsp | 00D 254 4538 900 | CE04W1C100MT SMG/RE3 | | | |
| C305 | nsp | 00D 257 0512 903 | CK73F1E104ZT +1608 | | | |
| C306 | nsp | 00D 254 4533 950 | CE04W0J471MT SMG/RE3 | | | |
| C307 | nsp | 00D 257 0512 903 | CK73F1E104ZT +1608 | | | |
| C308 | nsp | 00D 257 0509 929 | CK73B1H102KT +1608 | | | |
| C309 | nsp | 00D 257 0512 903 | CK73F1E104ZT +1608 | | | |
| C310 | nsp | 00D 257 0509 929 | CK73B1H102KT +1608 | | | |
| C311 | nsp | 00D 257 0512 903 | CK73F1E104ZT +1608 | | | |
| C312,313 | nsp | 00D 257 0509 929 | CK73B1H102KT +1608 | | | |
| C314 | nsp | 00D 257 0512 903 | CK73F1E104ZT +1608 | | | |
| C315 | nsp | 00D 257 0509 929 | CK73B1H102KT +1608 | | | |
| C316 | nsp | 00D 257 0512 903 | CK73F1E104ZT +1608 | | | |
| C317 | nsp | 00D 257 0509 929 | CK73B1H102KT +1608 | | | |
| C318 | nsp | 00D 257 0512 903 | CK73F1E104ZT +1608 | | | |
| C319 | | 00D 254 4533 950 | CE04W0J471MT SMG/RE3 | | | |
| C320 | nsp | 00D 254 4538 900 | CE04W1C100MT SMG/RE3 | | | |
| C323 | nsp | 00D 257 0509 929 | CK73B1H102KT +1608 | | | |
| C324 | nsp | 00D 257 0512 903 | CK73F1E104ZT +1608 | | | |
| C327 | nsp | 00D 257 0508 917 | CC73CH1H471JT +1608 | | | |
| C328,329 | nsp | 00D 257 0503 909 | CC73CH1H8R0DT +1608 | | | |

| Ref. No. | nsp | Part No. | Part Name | Remarks | Q'ty | New |
|---|---|---|---|---|---|---|
| C330 | nsp | 00D 257 0508 917 | CC73CH1H471JT +1608 | | | |
| C331 | nsp | 00D 257 0509 929 | CK73B1H102KT +1608 | | | |
| C332 | nsp | 00D 254 4533 921 | CE04W0J101MT SMG/RE3 | | | |
| C333 | nsp | 00D 257 0512 903 | CK73F1E104ZT +1608 | | | |
| C334 | nsp | 00D 257 0509 929 | CK73B1H102KT +1608 | | | |
| C335 | nsp | 00D 257 0512 903 | CK73F1E104ZT +1608 | | | |
| C336,337 | nsp | 00D 257 0509 929 | CK73B1H102KT +1608 | | | |
| C338 | nsp | 00D 257 0512 903 | CK73F1E104ZT +1608 | | | |
| C339 | nsp | 00D 257 0509 929 | CK73B1H102KT +1608 | | | |
| C340 | nsp | 00D 257 0512 903 | CK73F1E104ZT +1608 | | | |
| C341 | nsp | 00D 257 0509 929 | CK73B1H102KT +1608 | | | |
| C342 | nsp | 00D 257 0512 903 | CK73F1E104ZT +1608 | | | |
| C343 | nsp | 00D 257 0509 929 | CK73B1H102KT +1608 | | | |
| C344,345 | nsp | 00D 257 0512 903 | CK73F1E104ZT +1608 | | | |
| C346 | nsp | 00D 257 0509 929 | CK73B1H102KT +1608 | | | |
| C347 | nsp | 00D 257 0512 903 | CK73F1E104ZT +1608 | | | |
| C348,349 | nsp | 00D 257 0509 929 | CK73B1H102KT +1608 | | | |
| C350 | nsp | 00D 257 0512 903 | CK73F1E104ZT +1608 | | | |
| C351 | nsp | 00D 257 0509 929 | CK73B1H102KT +1608 | | | |
| C352 | nsp | 00D 257 0512 903 | CK73F1E104ZT +1608 | | | |
| C353 | nsp | 00D 257 0509 929 | CK73B1H102KT +1608 | | | |
| C354 | nsp | 00D 257 0512 903 | CK73F1E104ZT +1608 | | | |
| C357 | nsp | 00D 254 4538 900 | CE04W1C100MT SMG/RE3 | | | |
| C358 | nsp | 00D 257 0512 903 | CK73F1E104ZT +1608 | | | |
| C359 | nsp | 00D 257 0509 929 | CK73B1H102KT +1608 | | | |
| C360 | nsp | 00D 254 4538 900 | CE04W1C100MT SMG/RE3 | | | |
| C361 | nsp | 00D 257 0512 903 | CK73F1E104ZT +1608 | | | |
| C362 | nsp | 00D 257 0509 929 | CK73B1H102KT +1608 | | | |
| C363 | nsp | 00D 257 0512 903 | CK73F1E104ZT +1608 | | | |
| C364 | nsp | 00D 257 0509 929 | CK73B1H102KT +1608 | | | |
| C369 | | 00D 254 4533 950 | CE04W0J471MT SMG/RE3 | | | |
| C370 | nsp | 00D 257 0511 904 | CK73F1H103ZT +1608 | | | |
| C371 | nsp | 00D 257 0512 903 | CK73F1E104ZT +1608 | | | |
| C372 | nsp | 00D 257 0509 929 | CK73B1H102KT +1608 | | | |
| C401 | nsp | 00D 257 0516 954 | CK73B1E104KT +1608 | | | |
| C402-404 | nsp | 00D 257 0501 901 | CK73B1H103KT (1608) +1608 | | | |
| C405,406 | nsp | 00D 257 0512 903 | CK73F1E104ZT +1608 | | | |
| C407,408 | | 00D 254 4693 939 | CE04W1H101MT(RF0) | | | |
| C409-411 | nsp | 00D 257 0501 901 | CK73B1H103KT (1608) +1608 | | | |
| C412 | nsp | 00D 257 0506 951 | CC73CH1H101JT +1608 | | | |
| C413-416 | | 00D 257 3006 911 | CF73=1C104JT(ECHUB5)+3225 | | | |
| C417-420 | | 00D 254 4693 926 | CE04W1H470MT(RF0) | | | |
| C421,422 | nsp | 00D 257 0512 903 | CK73F1E104ZT +1608 | | | |
| C423-426 | | 00D 254 4692 901 | CE04W1J100MT(RF0) | | | |
| C427-430 | nsp | 00D 257 0512 903 | CK73F1E104ZT +1608 | | | |
| C439-446 | nsp | 00D 257 0512 903 | CK73F1E104ZT +1608 | | | |
| C447-454 | | 00D 257 3011 919 | CF73=1H102JT(ECHUB5)+2125 | | | |
| C455-458 | | 00D 257 3006 908 | CF73=1C682JT(ECHUB5)+2125 | | | |
| C459-462 | | 00D 257 3014 974 | CF73=1C183JT(ECHUB5)+3216 | | | |
| C463-470 | | 00D 257 3011 948 | CF73=1H222JT(ECHUB5)+2125 | | | |
| C471,472 | nsp | 00D 257 0506 951 | CC73CH1H101JT +1608 | | | |
| C473,474 | | 00D 255 4256 955 | CQ93P2A103JT(NH2) | | | |
| C475-482 | nsp | 00D 257 0512 903 | CK73F1E104ZT +1608 | | | |
| C483 | | 00D 255 4256 955 | CQ93P2A103JT(NH2) | | | |
| C484-486 | nsp | 00D 257 0506 951 | CC73CH1H101JT +1608 | | | |
| C487-489 | | 00D 254 4692 901 | CE04W1J100MT(RF0) | | | |

| Ref. No. | nsp | Part No. | Part Name | Remarks | Q'ty | New |
|---|---|---|---|---|---|---|
| C490 | nsp | 00D 257 0506 951 | CC73CH1H101JT +1608 | | | |
| C491-494 | nsp | 00D 257 0503 925 | CC73CH1H100DT +1608 | | | |
| C495,496 | nsp | 00D 257 0506 951 | CC73CH1H101JT +1608 | | | |
| C497,498 | | 00D 257 3006 911 | CF73=1C104JT(ECHUB5)+3225 | | | |
| C499 | | 00D 254 4693 926 | CE04W1H470MT(RF0) | | | |
| C503,504 | | 00D 254 4693 942 | CE04W1H221MT(RF0) | | | |
| C506 | nsp | 00D 257 0516 954 | CK73B1E104KT +1608 | | | |
| C507 | nsp | 00D 257 0501 901 | CK73B1H103KT (1608) +1608 | | | |
| C703 | nsp | 00D 257 0516 954 | CK73B1E104KT +1608 | | | |
| C704 | nsp | 00D 257 0501 901 | CK73B1H103KT (1608) +1608 | | | |
| C705 | nsp | 00D 257 0516 954 | CK73B1E104KT +1608 | | | |
| C706 | nsp | 00D 257 0501 901 | CK73B1H103KT (1608) +1608 | | | |
| C710 | | 00D 254 4750 704 | CE04W1H471MC(RFO) | | | |
| C713 | nsp | 00D 257 0501 901 | CK73B1H103KT (1608) +1608 | | | |
| C714 | nsp | 00D 257 0506 951 | CC73CH1H101JT +1608 | | | |
| C715 | nsp | 00D 257 0501 901 | CK73B1H103KT (1608) +1608 | | | |
| C716 | nsp | 00D 257 0506 951 | CC73CH1H101JT +1608 | | | |
| C717 | | 00D 257 3006 924 | CF73=1C103JT(ECHUB5)+2125 | | | |
| C718 | nsp | 00D 257 0506 951 | CC73CH1H101JT +1608 | | | |
| C719 | | 00D 254 4692 901 | CE04W1J100MT(RF0) | | | |
| C720 | nsp | 00D 257 0506 951 | CC73CH1H101JT +1608 | | | |
| C721 | | 00D 257 3006 924 | CF73=1C103JT(ECHUB5)+2125 | | | |
| C722 | nsp | 00D 257 0506 951 | CC73CH1H101JT +1608 | | | |
| C724 | | 00D 254 4692 901 | CE04W1J100MT(RF0) | | | |
| C725 | nsp | 00D 257 0506 951 | CC73CH1H101JT +1608 | | | |
| C726-729 | nsp | 00D 257 0516 954 | CK73B1E104KT +1608 | | | |
| C730 | nsp | 00D 257 0501 901 | CK73B1H103KT (1608) +1608 | | | |
| C731 | | 00D 257 3006 924 | CF73=1C103JT(ECHUB5)+2125 | | | |
| C732,733 | nsp | 00D 257 0501 901 | CK73B1H103KT (1608) +1608 | | | |
| C734 | | 00D 257 3006 924 | CF73=1C103JT(ECHUB5)+2125 | | | |
| C735 | nsp | 00D 257 0501 901 | CK73B1H103KT (1608) +1608 | | | |
| C736-739 | | 00D 254 4692 901 | CE04W1J100MT(RF0) | | | |
| C740-743 | | 00D 254 4693 926 | CE04W1H470MT(RF0) | | | |
| C744-747 | nsp | 00D 257 0516 954 | CK73B1E104KT +1608 | | | |
| C748 | nsp | 00D 257 0501 901 | CK73B1H103KT (1608) +1608 | | | |
| C750,751 | nsp | 00D 257 0501 901 | CK73B1H103KT (1608) +1608 | | | |
| C753,754 | nsp | 00D 257 0501 901 | CK73B1H103KT (1608) +1608 | | | |
| C756,757 | nsp | 00D 257 0501 901 | CK73B1H103KT (1608) +1608 | | | |
| C759 | nsp | 00D 257 0501 901 | CK73B1H103KT (1608) +1608 | | | |
| C768-775 | | 00D 255 4254 915 | CQ93P2A102JT(NH2) | | | |
| C776-779 | | 00D 255 4253 974 | CQ93P2A681JT(NH2) | | | |
| C780 | nsp | 00D 257 0501 901 | CK73B1H103KT (1608) +1608 | | | |
| C781,782 | | 00D 255 4253 974 | CQ93P2A681JT(NH2) | | | |
| C783,784 | nsp | 00D 257 0501 901 | CK73B1H103KT (1608) +1608 | | | |
| C785,786 | | 00D 255 4253 974 | CQ93P2A681JT(NH2) | | | |
| C787 | nsp | 00D 257 0501 901 | CK73B1H103KT (1608) +1608 | | | |
| C788,789 | | 00D 255 4256 913 | CQ93P2A682JT(NH2) | | | |
| C790,791 | | 00D 255 4257 912 | CQ93P2A183JT(NH2) | | | |
| C792-795 | | 00D 255 4254 999 | CQ93P2A222JT(NH2) | | | |
| C796,797 | | 00D 254 4693 939 | CE04W1H101MT(RF0) | | | |
| C798,799 | | 00D 254 3091 901 | CE04D1H220MBPT (RBD) | | | |
| C800 | nsp | 00D 257 0501 901 | CK73B1H103KT (1608) +1608 | | | |
| C801 | nsp | 00D 257 0512 903 | CK73F1E104ZT +1608 | | | |
| C802 | | 00D 254 4693 939 | CE04W1H101MT(RF0) | | | |
| C803 | nsp | 00D 257 0501 901 | CK73B1H103KT (1608) +1608 | | | |
| C804 | nsp | 00D 257 0512 903 | CK73F1E104ZT +1608 | | | |

| | Ref. No. | nsp | Part No. | Part Name | Remarks | Q'ty | New |
|---|---|---|---|---|---|---|---|
| | C805 | | 00D 254 4693 939 | CE04W1H101MT(RF0) | | | |
| | C814,815 | | 00D 254 4703 735 | CE04W1H471MC(RFS#A) | | | |
| | C816-818 | | 00D 255 4256 955 | CQ93P2A103JT(NH2) | | | |
| | C851 | | 00D 255 4256 955 | CQ93P2A103JT(NH2) | | | |
| | C854,855 | | 00D 254 4787 706 | CE04W1H332MC(RFS#5) | | | |
| | CC401 | | 00D 254 4693 926 | CE04W1H470MT(RF0) | | | |
| | CC402 | nsp | 00D 257 0516 954 | CK73B1E104KT +1608 | | | |
| | CC403,404 | | 00D 254 4692 901 | CE04W1J100MT(RF0) | | | |
| | CC405,406 | nsp | 00D 257 0516 954 | CK73B1E104KT +1608 | | | |
| | CC411-414 | nsp | 00D 257 0512 903 | CK73F1E104ZT +1608 | | | |
| | CC415-418 | | 00D 257 3011 919 | CF73=1H102JT(ECHUB5)+2125 | | | |
| | CC419,420 | | 00D 257 3012 905 | CF73=1H682JT(ECHUB5)+3216 | | | |
| | CC421,422 | | 00D 257 3012 950 | CF73=1H183JT(ECHUB5) | | | |
| | CC423-426 | | 00D 257 3011 948 | CF73=1H222JT(ECHUB5)+2125 | | | |
| | CC427 | | 00D 254 4693 939 | CE04W1H101MT(RF0) | | | |
| | CC428-431 | nsp | 00D 257 0512 903 | CK73F1E104ZT +1608 | | | |
| | CC432 | | 00D 254 4693 939 | CE04W1H101MT(RF0) | | | |
| | CC433-438 | | 00D 254 3091 901 | CE04D1H220MBPT (RBD) | | | |
| | CC439,440 | nsp | 00D 257 0503 925 | CC73CH1H100DT +1608 | | | |
| | CC441 | | 00D 254 3091 901 | CE04D1H220MBPT (RBD) | | | |
| | CC442-447 | | 00D 254 4693 939 | CE04W1H101MT(RF0) | | | |
| | CC448-453 | nsp | 00D 257 0508 917 | CC73CH1H471JT +1608 | | | |
| | CC701-704 | nsp | 00D 257 0501 901 | CK73B1H103KT (1608) +1608 | | | |
| | CC705,706 | nsp | 00D 257 0503 925 | CC73CH1H100DT +1608 | | | |
| | CC712 | | 00D 255 4256 955 | CQ93P2A103JT(NH2) | | | |
| | CC714 | | 00D 255 4256 955 | CQ93P2A103JT(NH2) | | | |
| | CC716 | | 00D 254 4703 706 | CE04W1H101MC(RFS#A) | | | |
| | CC718 | | 00D 254 4703 706 | CE04W1H101MC(RFS#A) | | | |
| | CC719,720 | nsp | 00D 257 0508 917 | CC73CH1H471JT +1608 | | | |
| | CC721,722 | | 00D 255 4253 932 | CQ93P2A471JT(NH2) | | | |
| | | | | | | | |
| **OTHERS PARTS GROUP** | | | | | | | |
| | AS402 | | - | COMMON PLATE(CU 0.8) | | | |
| | AS801,802 | | - | RADIATOR | | | |
| | AS910 | | - | COMMON PLATE(CU 0.8) | | | |
| | CW041 | nsp | 00D 203 6621 011 | 4P PH-SAN CON.CORD | | | |
| | CX032 | nsp | 00D 205 0653 036 | 3P VH CON.BASE | | | |
| | CX061 | nsp | 00D 205 1386 027 | 6P BASE(9115B-PT1) | | | |
| | CX103 | nsp | 00D 205 0480 005 | 10P KR CON BASE(L) | | | |
| | CX125-127 | nsp | 00D 205 1386 085 | 12P BASE(9115B-PT1) | | | |
| | CX128 | nsp | 00D 205 0536 027 | 12P CONNE SOCKET | | | |
| | CX129 | nsp | 00D 205 1386 085 | 12P BASE(9115B-PT1) | | | |
| | CX131 | nsp | 00D 205 1383 020 | 13P-FFC-BASE(9615C) | | | |
| | CX213 | nsp | 00D 205 1383 033 | 21P-FFC-BASE(9615C) | | | |
| | CX214 | | 00D 205 1346 009 | 21P 1.25FJ CONN.BASE | | | |
| | CY044 | nsp | 00D 205 0343 045 | 4P CONN.BASE(KR-PH) | | | |
| | CY125-129 | nsp | 00D 205 0536 027 | 12P CONNE SOCKET | | | |
| | CY212 | nsp | 00D 205 1383 033 | 21P-FFC-BASE(9615C) | | | |
| | CY214 | | 00D 205 1345 000 | 21P 1.25FJ CONN.PLUG | | | |
| | CY331 | nsp | 00D 205 1383 004 | 33P-FFC-BASE(9615C) | | | |

| | Ref. No. | nsp | Part No. | Part Name | Remarks | Q'ty | New |
|---|---|---|---|---|---|---|---|
| | FB101,102 | | 00D 235 0147 909 | E.FIL(BLM21PG221SN1)+2125 | | | |
| | FB301 | | 00D 235 0130 903 | CHIP EMIFIL(11A121) +1608 | | | |
| | JK101 | | 00D 205 1222 000 | RJ-45 JACK(GND) | | | |
| | JK401-406 | | 00D 204 8728 009 | 1P PIN JACK(BK)-LF | | | |
| | JK701,702 | | 00D 204 8666 006 | 1P PIN JACK(BK) | | | |
| | L401,402 | | 00D 235 0125 905 | INDUCTOR(FLC32C220K)+3216 | | | |
| | L801,802 | | 00D 235 0125 905 | INDUCTOR(FLC32C220K)+3216 | | | |
| | W101 | | - | M3-SCREW-TERMINAL08R | | | |
| | W407 | | - | M3-SCREW-TERMINAL08R | | | |
| | W707 | | - | M3-SCREW-TERMINAL08R | | | |
| | W711,712 | | - | M3-SCREW-TERMINAL08R | | | |
| | W801,802 | | - | M3-SCREW-TERMINAL08R | | | |
| | X101 | | 00D 399 1017 002 | X-TAL(24.576MHZ) | | | |
| | X301 | | 00D 399 0951 004 | X'TAL(25MHZ) | | | |
| | | nsp | 0RD 471 3303 016 | 3X6 CBS-Z | | | |

## 00DGU-3752A DIGITAL VIDEO P.W.B. UNIT ASS'Y

| | Ref. No. | nsp | Part No. | Part Name | Remarks | Q'ty | New |
|---|---|---|---|---|---|---|---|
| **SEMICONDUCTORS GROUP** | | | | | | | |
| | IC101 | | 00D 262 3605 000 | sxT2LF-400(Realta) | | | |
| | IC103 | | 00D 262 2570 903 | TC7W241FU(TE12L) | | | |
| | IC701-704 | | 00D 262 3479 003 | EM6A9320BI-4MG | | | |
| | IC800 | | 00D 262 2977 933 | BA50BC0FP-E2 | | | |
| | IC802 | | 00D GEN 8134 | I/P ROM SUB ASSY | MX29LV640BBTC-90 | | * |
| | IC803 | | 00D 262 3473 902 | LP2995M | | | * |
| | IC806 | | 00D 262 3642 908 | LM1117MPX-1.8/NOPB | | | |
| | IC807 | | 00D 262 3364 011 | SII9030CTU-7 | | | |
| | IC809 | | 00D 262 1230 901 | TC7S04FTE85L +C | | | |
| | IC904 | | 00D 262 3493 908 | TC7MBL3245AFK | | | |
| | IC906 | | 00D 262 3493 908 | TC7MBL3245AFK | | | |
| | TR800 | | 00D 273 0460 905 | KTC2875B-RTK +C | | | |
| | TR803 | | 00D 275 0110 905 | HN1K02FU-TE85L | | | |
| | D800,801 | | 00D 276 0717 903 | 1SS355 TE-17 +C | | | |
| | D802 | | 00D 276 0750 902 | RB521S-30TE61 +REF | | | |
| | D804 | | 00D 276 0717 903 | 1SS355 TE-17 +C | | | |
| **RESISTORS GROUP** | | | | | | | |
| | R148-151 | | 00D 247 2020 933 | RM73B--103FT +1608 | | | |
| | R275 | | 00D 247 2019 928 | RM73B--750FT | | | |
| | R276 | | 00D 247 2021 932 | RM73B--331FT | | | |
| | R277 | | 00D 247 2021 945 | RM73B--162FT | | | |
| | R278 | | 00D 247 2019 928 | RM73B--750FT | | | |
| | R701-704 | | 00D 247 2020 933 | RM73B--103FT +1608 | | | |
| | R707-709 | | 00D 247 2020 933 | RM73B--103FT +1608 | | | |
| | R712 | | 00D 247 2020 933 | RM73B--103FT +1608 | | | |
| | R717 | | 00D 247 2021 932 | RM73B--331FT | | | |
| | R718 | | 00D 247 2019 928 | RM73B--750FT | | | |
| | R721 | | 00D 247 2019 928 | RM73B--750FT | | | |
| | R724 | | 00D 247 2021 932 | RM73B--331FT | | | |
| | R725,726 | | 00D 247 2019 928 | RM73B--750FT | | | |
| | R767,768 | | 00D 247 2021 945 | RM73B--162FT | | | |
| | R938 | | 00D 247 2025 938 | RM73B--391FT | | | |
| | R967-970 | | 00D 247 2025 909 | RM73B--821FT | | | |
| **CAPACITORS GROUP** | | | | | | | |
| | C101-118 | nsp | 00D 257 5009 974 | CK73F1C104ZT +1005 | | | |
| | C119 | | 00D 257 2015 929 | CS77B1A220MT | | | |
| | C120-127 | nsp | 00D 257 5009 974 | CK73F1C104ZT +1005 | | | |
| | C128 | | 00D 257 4011 905 | CE67C0J101MT (RV2) +REF | | | |
| | C129 | nsp | 00D 257 5009 974 | CK73F1C104ZT +1005 | | | |
| | C130,131 | nsp | 00D 257 5009 916 | CK73B1C103KT | | | |
| | C132-141 | nsp | 00D 257 5009 974 | CK73F1C104ZT +1005 | | | |
| | C142 | | 00D 257 2015 929 | CS77B1A220MT | | | |
| | C143-166 | nsp | 00D 257 5009 974 | CK73F1C104ZT +1005 | | | |
| | C167 | | 00D 257 4012 917 | CE67C1C220MT (RV2) +REF | | | |
| | C168-171 | | 00D 257 4012 904 | CE67C1C100MT (RV2B55 +REF | | | |
| | C172-177 | nsp | 00D 257 5009 974 | CK73F1C104ZT +1005 | | | |
| | C178,179 | | 00D 257 4011 905 | CE67C0J101MT (RV2) +REF | | | |
| | C180,181 | nsp | 00D 257 5009 916 | CK73B1C103KT | | | |

| Ref. No. | nsp | Part No. | Part Name | Remarks | Q'ty | New |
|---|---|---|---|---|---|---|
| C182 | nsp | 00D 257 5009 974 | CK73F1C104ZT +1005 | | | |
| C183 | | 00D 257 4012 904 | CE67C1C100MT (RV2B55 +REF | | | |
| C184,185 | nsp | 00D 257 5009 974 | CK73F1C104ZT +1005 | | | |
| C188 | nsp | 00D 257 0506 951 | CC73CH1H101JT +1608 | | | |
| C509 | | 00D 257 2015 916 | CS77B1A101MT | | | |
| C510 | | 00D 257 2015 932 | CS77B1A470MT | | | |
| C511 | | 00D 257 2015 929 | CS77B1A220MT | | | |
| C701-709 | nsp | 00D 257 5009 974 | CK73F1C104ZT +1005 | | | |
| C710 | | 00D 257 4012 917 | CE67C1C220MT (RV2) +REF | | | |
| C711-719 | nsp | 00D 257 5009 974 | CK73F1C104ZT +1005 | | | |
| C720 | | 00D 257 4012 917 | CE67C1C220MT (RV2) +REF | | | |
| C721-729 | nsp | 00D 257 5009 974 | CK73F1C104ZT +1005 | | | |
| C730 | | 00D 257 4012 917 | CE67C1C220MT (RV2) +REF | | | |
| C731-739 | nsp | 00D 257 5009 974 | CK73F1C104ZT +1005 | | | |
| C740 | | 00D 257 4012 917 | CE67C1C220MT (RV2) +REF | | | |
| C741-748 | nsp | 00D 257 5009 916 | CK73B1C103KT | | | |
| C749-758 | nsp | 00D 257 5009 974 | CK73F1C104ZT +1005 | | | |
| C759 | | 00D 257 2015 916 | CS77B1A101MT | | | |
| C760 | | 00D 257 2015 929 | CS77B1A220MT | | | |
| C801 | | 00D 257 4012 904 | CE67C1C100MT (RV2B55 +REF | | | |
| C802 | nsp | 00D 257 5009 974 | CK73F1C104ZT +1005 | | | |
| C804 | nsp | 00D 257 5009 974 | CK73F1C104ZT +1005 | | | |
| C805,806 | nsp | 00D 257 5009 916 | CK73B1C103KT | | | |
| C807 | nsp | 00D 257 5009 974 | CK73F1C104ZT +1005 | | | |
| C808 | | 00D 257 2015 932 | CS77B1A470MT | | | |
| C809 | | 00D 257 4011 905 | CE67C0J101MT (RV2) +REF | | | |
| C810 | | 00D 257 2015 932 | CS77B1A470MT | | | |
| C811 | | 00D 257 4011 905 | CE67C0J101MT (RV2) +REF | | | |
| C812-846 | nsp | 00D 257 5009 916 | CK73B1C103KT | | | |
| C900,901 | nsp | 00D 257 5009 974 | CK73F1C104ZT +1005 | | | |
| C903 | nsp | 00D 257 5009 974 | CK73F1C104ZT +1005 | | | |
| C905-909 | nsp | 00D 257 5009 974 | CK73F1C104ZT +1005 | | | |
| C910 | nsp | 00D 257 5006 993 | CK73B1H102KT +1005 | | | |
| C911,912 | nsp | 00D 257 5009 974 | CK73F1C104ZT +1005 | | | |
| C913,914 | nsp | 00D 257 5006 993 | CK73B1H102KT +1005 | | | |
| C915 | nsp | 00D 257 5009 974 | CK73F1C104ZT +1005 | | | |
| C916 | nsp | 00D 257 5006 993 | CK73B1H102KT +1005 | | | |
| C917 | nsp | 00D 257 5009 974 | CK73F1C104ZT +1005 | | | |
| C918-921 | nsp | 00D 257 5006 993 | CK73B1H102KT +1005 | | | |
| C922,923 | nsp | 00D 257 5009 974 | CK73F1C104ZT +1005 | | | |
| C924-926 | nsp | 00D 257 5006 993 | CK73B1H102KT +1005 | | | |
| C928,929 | nsp | 00D 257 5009 974 | CK73F1C104ZT +1005 | | | |
| C930,931 | nsp | 00D 257 0506 951 | CC73CH1H101JT +1608 | | | |
| C932 | nsp | 00D 257 5006 993 | CK73B1H102KT +1005 | | | |
| C933 | nsp | 00D 257 5009 916 | CK73B1C103KT | | | |
| C934 | nsp | 00D 257 5009 974 | CK73F1C104ZT +1005 | | | |
| C935-938 | nsp | 00D 257 0516 954 | CK73B1E104KT +1608 | | | |
| C946,947 | nsp | 00D 257 5009 974 | CK73F1C104ZT +1005 | | | |
| C970,971 | | 00D 257 4012 920 | CE67C1C470MT (RV2) +REF | | | |
| C972 | | 00D 257 2015 929 | CS77B1A220MT | | | |
| C973,974 | | 00D 254 4655 922 | CE67C0J470MT (RV2) +REF | | | |
| C975,976 | | 00D 254 4655 906 | CE67C0J220MT (RV2) +REF | | | |
| C977 | | 00D 254 4655 922 | CE67C0J470MT (RV2) +REF | | | |
| C978-982 | | 00D 257 4012 904 | CE67C1C100MT (RV2B55 +REF | | | |
| C983 | nsp | 00D 257 5009 974 | CK73F1C104ZT +1005 | | | |
| C984-993 | nsp | 00D 257 5003 983 | CC73CH1H470JT | | | |

| | Ref. No. | nsp | Part No. | Part Name | Remarks | Q'ty | New |
|---|---|---|---|---|---|---|---|
| **OTHERS PARTS GROUP** | | | | | | | |
| | CX123 | nsp | 00D 205 1324 021 | 12P PIN HEADER(9120) | | | |
| | CX162 | nsp | 00D 205 1324 063 | 16P PIN HEADER(9120) | | | |
| | CX811 | nsp | 00D 205 1394 006 | 19P HDMI CONNECTOR | | | |
| | CY041 | nsp | 00D 205 0343 045 | 4P CONN.BASE(KR-PH) | | | |
| | CY064 | nsp | 00D 205 0449 062 | 6P VH CONNECTOR BASE | | | |
| | CY122 | nsp | 00D 205 1386 085 | 12P BASE(9115B-PT1) | | | |
| | CY125 | nsp | 00D 205 1386 085 | 12P BASE(9115B-PT1) | | | |
| | CY131 | nsp | 00D 205 0892 088 | 13P FFC CON. BASE | | | |
| | CY161 | nsp | 00D 205 1324 063 | 16P PIN HEADER(9120) | | | |
| | FB101-105 | | 00D 235 0136 907 | FBMJ1608HS280NT +1608 | | | |
| | FB800-806 | nsp | 00D 247 2018 903 | RM73B--0R0KT +1608 | | | |
| | FB807 | nsp | 00D 247 2003 989 | RM73B--330JT +1608 | | | |
| | FB808,809 | | 00D 235 0130 903 | CHIP EMIFIL(11A121) +1608 | | | |
| | JK851 | | 00D 204 6793 007 | RGB CONN(YKF41-5044) | | | |
| | L800 | | 00D 235 0125 905 | INDUCTOR(FLC32C220K)+3216 | | | |
| | L803 | | 00D 235 0125 905 | INDUCTOR(FLC32C220K)+3216 | | | |
| | L805,806 | | 00D 235 0125 905 | INDUCTOR(FLC32C220K)+3216 | | | |
| | W701,702 | | - | M3 SCREW TERMINAL | | | |
| | W704 | | - | M3 SCREW TERMINAL | | | |
| | W800,801 | | - | M3-SCREW-TERMINAL08R | | | |
| | X101 | | 00D 399 0987 900 | FCXO-05(66.666MHz) | | | |

## 00DGU-3793 FAN POWER P.W.B. UNIT ASS'Y

| | Ref. No. | nsp | Part No. | Part Name | Remarks | Q'ty | New |
|---|---|---|---|---|---|---|---|
| **SEMICONDUCTORS GROUP** | | | | | | | |
| | IC801 | | 00D 263 1100 050 | KIA7808API | | | |
| | D801 | | 00D 276 0401 905 | 1SS133T77 (TAPE) | | | |
| | | | | | | | |
| **CAPACITORS GROUP** | | | | | | | |
| | C801 | nsp | 00D 257 0514 901 | CK73F1C334ZT +1608 | | | |
| | C802 | nsp | 00D 257 0512 903 | CK73F1E104ZT +1608 | | | |
| | C803 | nsp | 00D 254 4538 900 | CE04W1C100MT SMG/RE3 | | | |
| | | | | | | | |
| **OTHERS PARTS GROUP** | | | | | | | |
| | CY038 | nsp | 00D 205 0343 032 | 3P CONN.BASE(KR-PH) | | | |

# PARTS LIST OF P.W.B. UNIT (for JP model)

＊本表に記載されている部品は、補修用部品のため製品に使用している部品とは一部、形状、寸法などが異なる場合があります。
＊ The parts listed below are for maintenance only, might differ from the parts used in the unit in appearances or dimensions.

＊ "nsp" 印の部品は常時在庫していませんので供給に長時間を要することがあります。場合によっては、供給をお断りする場合があります。
＊ Part indicated with the mark “nsp” are not always in stock and possibly to take a long period of time for supplying, or in some case supplying of part may be refused.

## 00DGU-3749B MAIN/A.VIDEO P.W.B. UNIT ASS'Y

| | Ref. No. | nsp | Part No. | Part Name | Remarks | Q'ty | New |
|---|---|---|---|---|---|---|---|
| **SEMICONDUCTORS GROUP** | | | | | | | |
| | IC101 | | 00D 262 2977 917 | BA25BC0FP-E2 | | | |
| | IC102 | | 00D 263 1205 900 | PQ012FZ01ZP +C | | | |
| | IC151 | | 00D 262 3591 907 | BD7956FS-E2 | | | |
| | IC152 | | 00D GEN 8103 | EEPROM ROM SUB ASSY | BR24L32F-WE2 +C | | |
| | IC153 | | 00D 262 3082 924 | BD4730G-TR | | | |
| | IC154 | | 00D 262 3216 907 | SM8707EV +C | | | |
| | IC155 | | 00D GEN 8284 -SP | FE/BE ROM SUB ASSY | MX29LV320CBTC-70G | | |
| | IC156 | | 00D 262 3594 001 | EM638165TS-7G | | | |
| | IC157 | | 00D 262 3592 003 | MN2DS0009AA | | | |
| | IC158 | | 00D 262 3594 001 | EM638165TS-7G | | | |
| | IC159 | | 00D 262 2517 908 | SN74LV08APW-EL2 +REF | | | |
| | IC161 | | 00D 262 3601 907 | TC7WH157FU(TE12L,F) | | | |
| | IC162 | | 00D 263 0989 900 | NJM2904M-TE1 +C | | | |
| | IC301 | | 00D 263 0673 902 | BA10393F-E2 +C | | | |
| | IC400 | | 00D 262 2514 901 | SN74LV138APW-EL2 +C | | | |
| | IC401 | | 00D 262 3217 003 | CXD2753R +C | | | |
| | IC402 | | 00D 262 2641 900 | SN74LV541APW-EL2 +C | | | |
| | IC403-406 | | 00D 262 3242 900 | SN74LV273APW-EL2 +REF | | | |
| | IC408 | | 00D 262 2641 900 | SN74LV541APW-EL2 +C | | | |
| | IC409 | | 00D 262 2875 006 | 16M SDRAM(TSOP)-7/8 +C | | | |
| | IC410,411 | | 00D 262 2669 908 | SN74LV157APW +C | | | |
| | IC412-414 | | 00D 262 2517 908 | SN74LV08APW-EL2 +REF | | | |
| | IC500 | | 00D 262 2977 917 | BA25BC0FP-E2 | | | |
| | IC501 | | 00D 262 3481 004 | ADV7324 | | | |
| | IC502 | | 00D 262 3595 903 | SN74LV594APWR | | | |
| | IC503 | | 00D 262 3277 904 | SN74LVC157APW-EL2 +C | | | |
| | IC505,506 | | 00D 262 3365 900 | BH7868FS | | | |
| | IC507 | | 00D 262 2813 903 | SN74AHCT08PW-EL2 +C | | | |
| | IC550 | | 00D 262 3481 004 | ADV7324 | | | |
| | | | | | | | |
| | TR150 | | 00D 272 0160 901 | 2SB1132T100Q +C | | | |
| | TR153 | | 00D 272 0160 901 | 2SB1132T100Q +C | | | |
| | TR154,155 | | 00D 273 0487 904 | 2SC2412K_T146R | | | |
| | TR156 | | 00D 269 0082 902 | DTC114EKT96 +C | | | |
| | TR157 | | 00D 275 0109 903 | 2SK3019-TL | | | |
| | TR158 | | 00D 269 0082 902 | DTC114EKT96 +C | | | |
| | TR159 | | 00D 271 0259 903 | 2SA1162-GR(TE85L) | | | |
| | TR160 | | 00D 269 0082 902 | DTC114EKT96 +C | | | |
| | TR161 | | 00D 273 0487 904 | 2SC2412K_T146R | | | |
| | TR162 | | 00D 275 0109 903 | 2SK3019-TL | | | |
| | TR163 | | 00D 273 0487 904 | 2SC2412K_T146R | | | |
| | TR164,165 | | 00D 275 0109 903 | 2SK3019-TL | | | |
| | TR166,167 | | 00D 269 0229 901 | DTC143TUAT106 | | | |
| | TR302 | | 00D 273 0460 905 | KTC2875B-RTK +C | | | |
| | TR500,501 | | 00D 274 0163 904 | 2SD601A +C | | | |
| | TR502-504 | | 00D 271 0293 901 | 2SA1022-B +C | | | |
| | TR505,506 | | 00D 272 0125 904 | 2SB709A +C | | | |
| | TR553,554 | | 00D 271 0293 901 | 2SA1022-B +C | | | |

| | Ref. No. | nsp | Part No. | Part Name | Remarks | Q'ty | New |
|---|---|---|---|---|---|---|---|
| | D101,102 | | 00D 276 0401 905 | 1SS133T77 (TAPE) | | | |
| | D152 | | 00D 276 0401 905 | 1SS133T77 (TAPE) | | | |
| | D500 | | 00D 276 0717 903 | 1SS355 TE-17 +C | | | |
| **RESISTORS GROUP** | | | | | | | |
| | R151 | | 00D 244 2051 945 | RS14B3A010JNBST(S) | | | |
| | RR301 | | 00D 247 2020 933 | RM73B--103FT +1608 | | | |
| | RR303 | | 00D 247 2020 933 | RM73B--103FT +1608 | | | |
| | RR304 | | 00D 247 2028 906 | RM73B--302FT +1608 | | | |
| | RR316 | | 00D 247 2021 903 | RM73B--122FT +1608 | | | |
| | RR318-320 | | 00D 247 2021 903 | RM73B--122FT +1608 | | | |
| | RA500-506 | | 00D 247 9002 909 | MNR14=330JE0AB +C | | | |
| | RA507,508 | | 00D 247 9007 920 | MNR14=0R0JE0 | | | |
| | RA550-556 | | 00D 247 9002 909 | MNR14=330JE0AB +C | | | |
| | VR501 | | 00D 211 6148 906 | V03PB471MT(RH03ADCS) +REF | | | |
| | VR551 | | 00D 211 6148 906 | V03PB471MT(RH03ADCS) +REF | | | |
| | | | | | | | |
| **CAPACITORS GROUP** | | | | | | | |
| | C101 | nsp | 00D 257 0512 903 | CK73F1E104ZT +1608 | | | |
| | C102 | nsp | 00D 254 4533 921 | CE04W0J101MT SMG/RE3 | | | |
| | C103 | nsp | 00D 257 0511 904 | CK73F1H103ZT +1608 | | | |
| | C104 | nsp | 00D 257 0512 903 | CK73F1E104ZT +1608 | | | |
| | C105,106 | nsp | 00D 254 4533 921 | CE04W0J101MT SMG/RE3 | | | |
| | C107 | nsp | 00D 257 0512 903 | CK73F1E104ZT +1608 | | | |
| | C108 | nsp | 00D 257 0511 904 | CK73F1H103ZT +1608 | | | |
| | C109 | nsp | 00D 257 0512 903 | CK73F1E104ZT +1608 | | | |
| | C111 | | 00D 257 4012 917 | CE67C1C220MT (RV2) +REF | | | |
| | C112 | nsp | 00D 257 0512 903 | CK73F1E104ZT +1608 | | | |
| | C113 | | 00D 257 4011 905 | CE67C0J101MT (RV2) +REF | | | |
| | C114 | | 00D 257 2015 929 | CS77B1A220MT | | | |
| | C115 | | 00D 257 4011 905 | CE67C0J101MT (RV2) +REF | | | |
| | C116 | nsp | 00D 257 0507 976 | CC73CH1H331JT +1608 | | | |
| | C117 | | 00D 257 2015 929 | CS77B1A220MT | | | |
| | C118 | nsp | 00D 257 0512 903 | CK73F1E104ZT +1608 | | | |
| | C119,120 | | 00D 257 4011 905 | CE67C0J101MT (RV2) +REF | | | |
| | C121 | nsp | 00D 257 0512 903 | CK73F1E104ZT +1608 | | | |
| | C122 | | 00D 257 4012 917 | CE67C1C220MT (RV2) +REF | | | |
| | C123 | nsp | 00D 257 0512 903 | CK73F1E104ZT +1608 | | | |
| | C124,125 | | 00D 257 4011 905 | CE67C0J101MT (RV2) +REF | | | |
| | C126,127 | nsp | 00D 257 0512 903 | CK73F1E104ZT +1608 | | | |
| | C136,137 | nsp | 00D 257 0511 904 | CK73F1H103ZT +1608 | | | |
| | C138 | | 00D 257 4011 905 | CE67C0J101MT (RV2) +REF | | | |
| | C139,140 | nsp | 00D 257 0512 903 | CK73F1E104ZT +1608 | | | |
| | C141 | nsp | 00D 257 0511 904 | CK73F1H103ZT +1608 | | | |
| | C148,149 | | 00D 257 2017 901 | CS77B0J101MT(SK8) | | | |
| | C150 | nsp | 00D 257 0512 903 | CK73F1E104ZT +1608 | | | |
| | C151 | | 00D 257 4012 933 | CE67C1C101MT (RV2) +REF | | | |
| | C152 | | 00D 257 4012 920 | CE67C1C470MT (RV2) +REF | | | |
| | C155 | nsp | 00D 257 0512 903 | CK73F1E104ZT +1608 | | | |
| | C156,157 | | 00D 257 4012 917 | CE67C1C220MT (RV2) +REF | | | |
| | C160 | | 00D 257 4012 920 | CE67C1C470MT (RV2) +REF | | | |

| Ref. No. | nsp | Part No. | Part Name | Remarks | Q'ty | New |
|---|---|---|---|---|---|---|
| C163 | nsp | 00D 257 0508 917 | CC73CH1H471JT +1608 | | | |
| C164 | | 00D 257 4012 917 | CE67C1C220MT (RV2) +REF | | | |
| C165 | nsp | 00D 257 0512 903 | CK73F1E104ZT +1608 | | | |
| C166 | | 00D 257 4012 920 | CE67C1C470MT (RV2) +REF | | | |
| C167 | nsp | 00D 257 0512 903 | CK73F1E104ZT +1608 | | | |
| C170 | | 00D 257 4012 920 | CE67C1C470MT (RV2) +REF | | | |
| C171 | | 00D 257 4012 917 | CE67C1C220MT (RV2) +REF | | | |
| C172 | nsp | 00D 257 0501 901 | CK73B1H103KT (1608) +1608 | | | |
| C174 | | 00D 257 4012 917 | CE67C1C220MT (RV2) +REF | | | |
| C175 | nsp | 00D 257 0512 903 | CK73F1E104ZT +1608 | | | |
| C176 | | 00D 257 4012 917 | CE67C1C220MT (RV2) +REF | | | |
| C177 | nsp | 00D 257 0516 954 | CK73B1E104KT +1608 | | | |
| C178 | nsp | 00D 257 0520 908 | CK73B1A154KT +1608 | | | |
| C179 | nsp | 00D 257 0516 954 | CK73B1E104KT +1608 | | | |
| C180 | nsp | 00D 257 0516 925 | CK73B1E333KT +1608 | | | |
| C181 | nsp | 00D 257 0512 903 | CK73F1E104ZT +1608 | | | |
| C182 | nsp | 00D 257 0506 951 | CC73CH1H101JT +1608 | | | |
| C183 | nsp | 00D 257 0501 930 | CK73B1H183KT | | | |
| C184,185 | nsp | 00D 257 0512 903 | CK73F1E104ZT +1608 | | | |
| C186 | nsp | 00D 257 0521 907 | CK73B1A105KT +1608 | | | |
| C187-189 | nsp | 00D 257 0512 903 | CK73F1E104ZT +1608 | | | |
| C190 | | 00D 254 4655 922 | CE67C0J470MT (RV2) +REF | | | |
| C191-195 | nsp | 00D 257 0512 903 | CK73F1E104ZT +1608 | | | |
| C196 | | 00D 257 2017 901 | CS77B0J101MT(SK8) | | | |
| C197 | nsp | 00D 257 0516 954 | CK73B1E104KT +1608 | | | |
| C198,199 | nsp | 00D 257 0511 904 | CK73F1H103ZT +1608 | | | |
| C200 | nsp | 00D 257 0512 903 | CK73F1E104ZT +1608 | | | |
| C201,202 | nsp | 00D 257 0516 954 | CK73B1E104KT +1608 | | | |
| C203 | | 00D 257 4011 905 | CE67C0J101MT (RV2) +REF | | | |
| C204 | nsp | 00D 257 0516 954 | CK73B1E104KT +1608 | | | |
| C205-207 | nsp | 00D 257 0512 903 | CK73F1E104ZT +1608 | | | |
| C208 | | 00D 257 4011 905 | CE67C0J101MT (RV2) +REF | | | |
| C209 | nsp | 00D 257 0516 954 | CK73B1E104KT +1608 | | | |
| C210 | nsp | 00D 257 0520 911 | CK73B1A224KT +1608 | | | |
| C211 | nsp | 00D 257 0512 903 | CK73F1E104ZT +1608 | | | |
| C212,213 | nsp | 00D 257 0506 951 | CC73CH1H101JT +1608 | | | |
| C214 | | 00D 257 4011 905 | CE67C0J101MT (RV2) +REF | | | |
| C215,216 | nsp | 00D 257 0512 903 | CK73F1E104ZT +1608 | | | |
| C217 | nsp | 00D 257 0509 929 | CK73B1H102KT +1608 | | | |
| C218-220 | nsp | 00D 257 0512 903 | CK73F1E104ZT +1608 | | | |
| C221 | nsp | 00D 257 0511 904 | CK73F1H103ZT +1608 | | | |
| C222 | nsp | 00D 257 0503 967 | CC73CH1H150JT +1608 | | | |
| C223-225 | nsp | 00D 257 0512 903 | CK73F1E104ZT +1608 | | | |
| C227 | nsp | 00D 257 0503 967 | CC73CH1H150JT +1608 | | | |
| C228 | nsp | 00D 257 0512 903 | CK73F1E104ZT +1608 | | | |
| C229 | nsp | 00D 257 0511 904 | CK73F1H103ZT +1608 | | | |
| C230-232 | nsp | 00D 257 0512 903 | CK73F1E104ZT +1608 | | | |
| C236,237 | nsp | 00D 257 0512 903 | CK73F1E104ZT +1608 | | | |
| C238,239 | nsp | 00D 257 0509 929 | CK73B1H102KT +1608 | | | |
| C240 | nsp | 00D 257 0512 903 | CK73F1E104ZT +1608 | | | |
| C241 | nsp | 00D 257 0509 929 | CK73B1H102KT +1608 | | | |
| C242-250 | nsp | 00D 257 0512 903 | CK73F1E104ZT +1608 | | | |
| C251 | | 00D 257 4011 905 | CE67C0J101MT (RV2) +REF | | | |
| C252-256 | nsp | 00D 257 0512 903 | CK73F1E104ZT +1608 | | | |
| C257 | nsp | 00D 257 0506 951 | CC73CH1H101JT +1608 | | | |
| C258 | nsp | 00D 257 0512 903 | CK73F1E104ZT +1608 | | | |

| Ref. No. | nsp | Part No. | Part Name | Remarks | Q'ty | New |
|---|---|---|---|---|---|---|
| C259 | nsp | 00D 257 0506 951 | CC73CH1H101JT +1608 | | | |
| C260,261 | nsp | 00D 257 0512 903 | CK73F1E104ZT +1608 | | | |
| C262 | | 00D 257 4011 905 | CE67C0J101MT (RV2) +REF | | | |
| C264-266 | nsp | 00D 257 0520 911 | CK73B1A224KT +1608 | | | |
| C267 | nsp | 00D 257 0516 954 | CK73B1E104KT +1608 | | | |
| C268 | | 00D 257 4011 905 | CE67C0J101MT (RV2) +REF | | | |
| C269-272 | nsp | 00D 257 0512 903 | CK73F1E104ZT +1608 | | | |
| C273 | | 00D 257 4011 905 | CE67C0J101MT (RV2) +REF | | | |
| C274-277 | nsp | 00D 257 0512 903 | CK73F1E104ZT +1608 | | | |
| C281 | nsp | 00D 257 0512 903 | CK73F1E104ZT +1608 | | | |
| C282 | nsp | 00D 257 0516 954 | CK73B1E104KT +1608 | | | |
| C305 | nsp | 00D 257 0512 903 | CK73F1E104ZT +1608 | | | |
| C396 | nsp | 00D 257 0509 929 | CK73B1H102KT +1608 | | | |
| C397 | nsp | 00D 257 0512 903 | CK73F1E104ZT +1608 | | | |
| C398 | nsp | 00D 257 0509 929 | CK73B1H102KT +1608 | | | |
| C399 | nsp | 00D 257 0512 903 | CK73F1E104ZT +1608 | | | |
| C405 | nsp | 00D 257 0512 903 | CK73F1E104ZT +1608 | | | |
| C406 | nsp | 00D 257 0509 929 | CK73B1H102KT +1608 | | | |
| C407-411 | nsp | 00D 257 0512 903 | CK73F1E104ZT +1608 | | | |
| C412 | | 00D 257 4012 917 | CE67C1C220MT (RV2) +REF | | | |
| C414 | nsp | 00D 257 0512 903 | CK73F1E104ZT +1608 | | | |
| C415 | nsp | 00D 257 0511 904 | CK73F1H103ZT +1608 | | | |
| C417 | nsp | 00D 257 0503 925 | CC73CH1H100DT +1608 | | | |
| C418 | nsp | 00D 257 0501 901 | CK73B1H103KT (1608) +1608 | | | |
| C419-421 | nsp | 00D 257 0512 903 | CK73F1E104ZT +1608 | | | |
| C422,423 | nsp | 00D 257 0511 904 | CK73F1H103ZT +1608 | | | |
| C424 | nsp | 00D 257 0512 903 | CK73F1E104ZT +1608 | | | |
| C425 | nsp | 00D 257 0509 929 | CK73B1H102KT +1608 | | | |
| C426,427 | nsp | 00D 257 0512 903 | CK73F1E104ZT +1608 | | | |
| C428 | nsp | 00D 257 0509 929 | CK73B1H102KT +1608 | | | |
| C429,430 | nsp | 00D 257 0512 903 | CK73F1E104ZT +1608 | | | |
| C431 | | 00D 257 4011 905 | CE67C0J101MT (RV2) +REF | | | |
| C432-438 | nsp | 00D 257 0512 903 | CK73F1E104ZT +1608 | | | |
| C439 | | 00D 257 4011 905 | CE67C0J101MT (RV2) +REF | | | |
| C440 | nsp | 00D 257 0511 904 | CK73F1H103ZT +1608 | | | |
| C441 | nsp | 00D 257 0512 903 | CK73F1E104ZT +1608 | | | |
| C442 | nsp | 00D 257 0509 929 | CK73B1H102KT +1608 | | | |
| C443 | nsp | 00D 257 0512 903 | CK73F1E104ZT +1608 | | | |
| C444 | nsp | 00D 257 0511 904 | CK73F1H103ZT +1608 | | | |
| C445,446 | nsp | 00D 257 0512 903 | CK73F1E104ZT +1608 | | | |
| C447 | nsp | 00D 257 0509 929 | CK73B1H102KT +1608 | | | |
| C448 | nsp | 00D 257 0511 904 | CK73F1H103ZT +1608 | | | |
| C449-454 | nsp | 00D 257 0512 903 | CK73F1E104ZT +1608 | | | |
| C455 | | 00D 257 4011 905 | CE67C0J101MT (RV2) +REF | | | |
| C477-479 | nsp | 00D 257 0512 903 | CK73F1E104ZT +1608 | | | |
| C480 | nsp | 00D 257 0511 904 | CK73F1H103ZT +1608 | | | |
| C481 | nsp | 00D 257 0512 903 | CK73F1E104ZT +1608 | | | |
| C482 | nsp | 00D 257 0511 904 | CK73F1H103ZT +1608 | | | |
| C483-488 | nsp | 00D 257 0512 903 | CK73F1E104ZT +1608 | | | |
| C500,501 | nsp | 00D 257 0509 929 | CK73B1H102KT +1608 | | | |
| C502-504 | nsp | 00D 257 0512 903 | CK73F1E104ZT +1608 | | | |
| C505 | nsp | 00D 257 0501 901 | CK73B1H103KT (1608) +1608 | | | |
| C506 | nsp | 00D 257 0512 903 | CK73F1E104ZT +1608 | | | |
| C507,508 | nsp | 00D 257 0506 951 | CC73CH1H101JT +1608 | | | |
| C509 | nsp | 00D 257 0512 903 | CK73F1E104ZT +1608 | | | |
| C511 | nsp | 00D 257 0501 901 | CK73B1H103KT (1608) +1608 | | | |

| Ref. No. | nsp | Part No. | Part Name | Remarks | Q'ty | New |
|---|---|---|---|---|---|---|
| C512-514 | nsp | 00D 257 0512 903 | CK73F1E104ZT +1608 | | | |
| C516 | nsp | 00D 257 0512 903 | CK73F1E104ZT +1608 | | | |
| C517 | nsp | 00D 257 0509 903 | CK73B1H821KT +1608 | | | |
| C518 | nsp | 00D 257 0510 921 | CK73B1H392KT +1608 | | | |
| C519-525 | nsp | 00D 257 0512 903 | CK73F1E104ZT +1608 | | | |
| C526,527 | nsp | 00D 257 0501 901 | CK73B1H103KT (1608) +1608 | | | |
| C528 | nsp | 00D 257 0516 954 | CK73B1E104KT +1608 | | | |
| C530-533 | nsp | 00D 257 0501 901 | CK73B1H103KT (1608) +1608 | | | |
| C534 | nsp | 00D 257 0516 954 | CK73B1E104KT +1608 | | | |
| C536 | nsp | 00D 257 0512 903 | CK73F1E104ZT +1608 | | | |
| C544 | nsp | 00D 257 0501 901 | CK73B1H103KT (1608) +1608 | | | |
| C546 | nsp | 00D 257 0501 901 | CK73B1H103KT (1608) +1608 | | | |
| C549 | nsp | 00D 257 0512 903 | CK73F1E104ZT +1608 | | | |
| C550 | nsp | 00D 257 0501 901 | CK73B1H103KT (1608) +1608 | | | |
| C551 | nsp | 00D 257 0516 954 | CK73B1E104KT +1608 | | | |
| C552 | nsp | 00D 257 0501 901 | CK73B1H103KT (1608) +1608 | | | |
| C553,554 | nsp | 00D 257 0512 903 | CK73F1E104ZT +1608 | | | |
| C555 | nsp | 00D 257 0501 901 | CK73B1H103KT (1608) +1608 | | | |
| C556 | nsp | 00D 257 0512 903 | CK73F1E104ZT +1608 | | | |
| C559 | nsp | 00D 257 0512 903 | CK73F1E104ZT +1608 | | | |
| C600,601 | nsp | 00D 257 0512 903 | CK73F1E104ZT +1608 | | | |
| C605 | nsp | 00D 257 0501 901 | CK73B1H103KT (1608) +1608 | | | |
| C606,607 | nsp | 00D 257 0512 903 | CK73F1E104ZT +1608 | | | |
| C609 | nsp | 00D 257 0509 903 | CK73B1H821KT +1608 | | | |
| C610 | nsp | 00D 257 0512 903 | CK73F1E104ZT +1608 | | | |
| C611 | nsp | 00D 257 0510 921 | CK73B1H392KT +1608 | | | |
| C615,616 | nsp | 00D 257 0512 903 | CK73F1E104ZT +1608 | | | |
| C624 | nsp | 00D 257 0512 903 | CK73F1E104ZT +1608 | | | |
| C672,673 | nsp | 00D 257 0512 903 | CK73F1E104ZT +1608 | | | |
| C676 | nsp | 00D 257 0512 903 | CK73F1E104ZT +1608 | | | |
| C696 | nsp | 00D 257 0512 903 | CK73F1E104ZT +1608 | | | |
| C900 | | 00D 254 4655 922 | CE67C0J470MT (RV2) +REF | | | |
| C901 | | 00D 257 2015 929 | CS77B1A220MT | | | |
| C902-906 | | 00D 257 4011 905 | CE67C0J101MT (RV2) +REF | | | |
| C907 | | 00D 254 4660 946 | CE67C1H010MT (RV2B55 +REF | | | |
| C908 | | 00D 254 4655 922 | CE67C0J470MT (RV2) +REF | | | |
| C909 | | 00D 257 4011 905 | CE67C0J101MT (RV2) +REF | | | |
| C910 | | 00D 254 4660 946 | CE67C1H010MT (RV2B55 +REF | | | |
| C911 | | 00D 254 4655 922 | CE67C0J470MT (RV2) +REF | | | |
| C912 | | 00D 257 4012 917 | CE67C1C220MT (RV2) +REF | | | |
| C913 | | 00D 254 4655 977 | CE67C0J102MT (RV) +REF | | | |
| C914 | | 00D 257 4011 905 | CE67C0J101MT (RV2) +REF | | | |
| C915 | | 00D 254 4655 977 | CE67C0J102MT (RV) +REF | | | |
| C916 | | 00D 257 4011 905 | CE67C0J101MT (RV2) +REF | | | |
| C917 | | 00D 254 4655 977 | CE67C0J102MT (RV) +REF | | | |
| C918,919 | | 00D 257 4011 905 | CE67C0J101MT (RV2) +REF | | | |
| C920 | | 00D 257 4012 917 | CE67C1C220MT (RV2) +REF | | | |
| C921 | | 00D 257 4011 905 | CE67C0J101MT (RV2) +REF | | | |
| C922 | | 00D 257 4012 917 | CE67C1C220MT (RV2) +REF | | | |
| C923 | | 00D 254 4660 946 | CE67C1H010MT (RV2B55 +REF | | | |
| C924,925 | | 00D 254 4655 922 | CE67C0J470MT (RV2) +REF | | | |
| C926 | | 00D 254 4655 977 | CE67C0J102MT (RV) +REF | | | |
| C927,928 | | 00D 257 4011 905 | CE67C0J101MT (RV2) +REF | | | |
| C929 | | 00D 257 4012 917 | CE67C1C220MT (RV2) +REF | | | |
| C930-933 | | 00D 257 4011 905 | CE67C0J101MT (RV2) +REF | | | |
| C950 | | 00D 257 4012 917 | CE67C1C220MT (RV2) +REF | | | |

| | Ref. No. | nsp | Part No. | Part Name | Remarks | Q'ty | New |
|---|---|---|---|---|---|---|---|
| | C980 | | 00D 257 4011 905 | CE67C0J101MT (RV2) +REF | | | |
| | C982 | | 00D 257 4012 917 | CE67C1C220MT (RV2) +REF | | | |
| | C983 | | 00D 257 4011 905 | CE67C0J101MT (RV2) +REF | | | |
| | C984,985 | | 00D 257 4012 917 | CE67C1C220MT (RV2) +REF | | | |
| | C986,987 | nsp | 00D 257 0512 903 | CK73F1E104ZT +1608 | | | |
| | C988 | | 00D 257 4012 917 | CE67C1C220MT (RV2) +REF | | | |
| | C990-992 | nsp | 00D 257 0512 903 | CK73F1E104ZT +1608 | | | |
| | C995,996 | nsp | 00D 257 0512 903 | CK73F1E104ZT +1608 | | | |
| **OTHERS PARTS GROUP** | | | | | | | |
| | AS601,602 | | - | M3-SCREW-TERMINAL08R | | | |
| | CX053 | nsp | 00D 205 0355 059 | 5P KR CON BASE(L) | | | |
| | CX062 | nsp | 00D 205 1323 064 | 6P PIN HEADER(9120) | | | |
| | CX122 | nsp | 00D 205 1386 085 | 12P BASE(9115B-PT1) | | | |
| | CX125 | nsp | 00D 205 1386 085 | 12P BASE(9115B-PT1) | | | |
| | CX151 | nsp | 00D 205 1224 930 | 15P FFC BASE(9616A) | | | |
| | CX161 | nsp | 00D 205 1324 063 | 16P PIN HEADER(9120) | | | |
| | CX211 | | 00D 205 1346 009 | 21P 1.25FJ CONN.BASE | | | |
| | CX212 | nsp | 00D 205 1334 011 | 21P-FFC-BASE(9615A) | | | |
| | CX241 | nsp | 00D 205 1264 916 | 24P-FFC-BASE(9631SG) | | | |
| | CX331 | nsp | 00D 205 1334 008 | 33P-FFC-BASE (P=1) | | | |
| | CY062 | nsp | 00D 205 1325 062 | 6P SOCKET(9120) | | | |
| | CY071 | nsp | 00D 205 0355 075 | 7P KR CON BASE(L) | | | |
| | CY123 | nsp | 00D 205 1324 021 | 12P PIN HEADER(9120) | | | |
| | CY132 | nsp | 00D 205 0480 034 | 13P KR CON BASE(L) | | | |
| | CY162 | nsp | 00D 205 1324 063 | 16P PIN HEADER(9120) | | | |
| | CY211 | | 00D 205 1345 000 | 21P 1.25FJ CONN.PLUG | | | |
| | FB101 | | 00D 235 0136 907 | FBMJ1608HS280NT +1608 | | | |
| | FB103-107 | | 00D 235 0136 907 | FBMJ1608HS280NT +1608 | | | |
| | FB150 | | 00D 235 0130 903 | CHIP EMIFIL(11A121) +1608 | | | |
| | FB155,156 | | 00D 235 0130 903 | CHIP EMIFIL(11A121) +1608 | | | |
| | FB159-161 | nsp | 00D 247 2018 903 | RM73B--0R0KT +1608 | | | |
| | JK703 | | 00D 205 1395 005 | 1P S-TERMINAL-LF | | | |
| | JK704 | | 00D 204 6755 003 | D-CONNECTOR(AU) | | | |
| | JK705-708 | | 00D 204 8728 009 | 1P PIN JACK(BK)-LF | | | |
| | JK853 | | 00D 205 1332 000 | 3P BNC CONNECTOR(AU) | | | |
| | L150 | | 00D 235 0125 905 | INDUCTOR(FLC32C220K)+3216 | | | |
| | L154-156 | | 00D 235 0074 933 | INDUCTOR(101)ST | | | |
| | L157,158 | | 00D 235 0125 905 | INDUCTOR(FLC32C220K)+3216 | | | |
| | L502-505 | | 00D 235 0125 905 | INDUCTOR(FLC32C220K)+3216 | | | |
| | L552,553 | | 00D 235 0125 905 | INDUCTOR(FLC32C220K)+3216 | | | |
| | X150 | | 00D 399 0596 003 | XTAL(27MHZ) | | | |

## 00DGU-3750B POWER/DISPLAY P.W.B. UNIT ASS'Y

| | Ref. No. | nsp | Part No. | Part Name | Remarks | Q'ty | New |
|---|---|---|---|---|---|---|---|
| **SEMICONDUCTORS GROUP** | | | | | | | |
| | IC101 | | 00D 262 3606 902 | PT6302-R-001(L) | | | |
| | IC102 | | 00D 262 3602 003 | GP1UE271XKVF | | | |
| | IC108 | | 00D 269 0222 005 | GP1FA52HTZ0F | | | |
| | IC901 | | 00D 265 0126 002 | TOP247YN | | | |
| | IC902 | | 00D 263 1256 904 | TA76432S(TPE6,F) | | | |
| | IC903 | | 00D 263 1100 005 | KIA7805API | | | |
| | IC904 | | 00D 262 2580 906 | CXA1511M +C | | | |
| | IC905 | | 00D 262 2114 903 | UPD4721GS-GJG +C | | | |
| | IC906 | | 00D 262 3047 008 | PC123Y22 | | | |
| | IC907,908 | | 00D 263 1256 904 | TA76432S(TPE6,F) | | | |
| | IC909 | | 00D 262 3277 904 | SN74LVC157APW-EL2 +C | | | |
| | IC910 | | 00D 263 1100 021 | KIA7812API | | | |
| | TR101,102 | | 00D 269 0082 902 | DTC114EKT96 +C | | | |
| | TR103,104 | | 00D 271 0308 906 | 2SA933ASTPS | | | |
| | TR105-111 | | 00D 269 0082 902 | DTC114EKT96 +C | | | |
| | TR121 | | 00D 273 0487 904 | 2SC2412K_T146R | | | |
| | TR901 | | 00D 271 0308 906 | 2SA933ASTPS | | | |
| | TR902 | | 00D 272 0170 001 | 2SB1268(R/S) | | | |
| | TR904 | | 00D 272 0083 004 | 2SB1185(E/F) | | | |
| | TR905 | | 00D 274 0036 905 | 2SD468(C)TF | | | |
| | TR907 | | 00D 269 0083 901 | DTA114EKT96 +C | | | |
| | TR908,909 | | 00D 269 0082 902 | DTC114EKT96 +C | | | |
| | TR910 | | 00D 275 0115 900 | RSS100N03TB | | | |
| | TR911 | | 00D 269 0055 900 | DTA144EKT96 +C | | | |
| | TR912 | | 00D 269 0054 901 | DTC144EKT96 +C | | | |
| | TR913,914 | | 00D 274 0209 004 | 2SC5370 | | | |
| | TR915,916 | | 00D 271 0308 906 | 2SA933ASTPS | | | |
| | TR917 | | 00D 273 0303 910 | 2SC1740S(S)-T | | | |
| | D101-109 | | 00D 276 0401 905 | 1SS133T77 (TAPE) | | | |
| | D901-904 | | 00D 276 0729 904 | EM01AT (V1) | | | |
| | D906 | | 00D 276 0401 905 | 1SS133T77 (TAPE) | | | |
| | D907 | | 00D 276 0813 001 | AP01C | | | |
| | D908 | | 00D 276 0818 006 | FMJ-2303 | | | |
| | D909 | | 00D 276 0401 905 | 1SS133T77 (TAPE) | | | |
| | D910 | | 00D 276 0803 008 | FMB-G19L | | | |
| | D911 | | 00D 276 0730 906 | AG01ZT (V1) | | | |
| | D914 | | 00D 276 0730 906 | AG01ZT (V1) | | | |
| | D915 | | 00D 276 0401 905 | 1SS133T77 (TAPE) | | | |
| | D921 | | 00D 276 0401 905 | 1SS133T77 (TAPE) | | | |
| | D922 | | 00D 276 0842 904 | RB551V-30TE-17 | | | * |
| | D923-925 | | 00D 276 0401 905 | 1SS133T77 (TAPE) | | | |
| | D926 | | 00D 276 0730 906 | AG01ZT (V1) | | | |
| | ZD903 | | 00D 276 0762 945 | MTZJ36B T77 | | | |
| | ZD904 | | 00D 276 0760 921 | MTZJ4.3B T77 | | | |
| | ZD905 | | 00D 276 0760 947 | MTZJ5.1B T77 | | | |
| | LD101,102 | | 00D 393 9576 903 | SELU1E10CXM-002 | | | |
| | LD103 | | 00D 393 9645 009 | SML1216W(D) | | | |
| | LD104,105 | | 00D 393 9576 903 | SELU1E10CXM-002 | | | |
| | LD106-108 | | 00D 393 9452 904 | SEL1410E(TP2) | | | |

| | Ref. No. | nsp | Part No. | Part Name | Remarks | Q'ty | New |
|---|---|---|---|---|---|---|---|
| | TH901 | | 00D 279 0044 002 | NTH11D8R0LA | | | |
| | FL101 | | 00D 393 8078 004 | FL TUBE(15-BT-97GNK) | | | |
| **RESISTORS GROUP** | | | | | | | |
| | R908 | | 00D 244 2675 729 | RS14B3D224JNBF (ERG) | | | |
| | R916 | | 00D 247 2023 914 | RM73B--103DT(1608) +1608 | | | |
| | R917 | | 00D 247 2023 927 | RM73B--1652DT(1608) +1608 | | | |
| | R918 | | 00D 244 2055 912 | RS14B3AR47JNBST(S) | | | |
| | R919 | | 00D 244 2681 904 | RS14B3A1R5JNBST(S) | | | |
| | R926 | | 00D 244 2052 973 | RS14B3A561JNBST(S) | | | |
| | R929 | | 00D 244 2050 991 | RS14B3A682JNBST(S) | | | |
| | R930 | | 00D 244 2052 973 | RS14B3A561JNBST(S) | | | |
| | R938 | | 00D 244 2051 929 | RS14B3A821JNBST(S) | | | |
| | R940 | | 00D 241 2315 938 | RD14B2E330GFRST | | | |
| | R955,956 | | 00D 244 2052 973 | RS14B3A561JNBST(S) | | | |
| | R960,961 | | 00D 247 2023 914 | RM73B--103DT(1608) +1608 | | | |
| | R962-964 | | 00D 244 2690 908 | RS14B3A120JNBST(S) | | | |
| | R967 | | 00D 247 2023 930 | RM73B--242DT(1608) +1608 | | | |
| | R968 | | 00D 247 2023 914 | RM73B--103DT(1608) +1608 | | | |
| | R969-974 | | 00D 244 2055 912 | RS14B3AR47JNBST(S) | | | |
| | R982-985 | | 00D 244 2681 904 | RS14B3A1R5JNBST(S) | | | |
| | R988 | | 00D 244 2055 912 | RS14B3AR47JNBST(S) | | | |
| | | | | | | | |
| **CAPACITORS GROUP** | | | | | | | |
| | C101 | nsp | 00D 257 0512 903 | CK73F1E104ZT +1608 | | | |
| | C102 | nsp | 00D 257 0511 904 | CK73F1H103ZT +1608 | | | |
| | C103 | | 00D 254 4300 963 | CE04W0J101MT(SRE) | | | |
| | C104 | nsp | 00D 257 0512 903 | CK73F1E104ZT +1608 | | | |
| | C105 | nsp | 00D 257 0504 966 | CC73CH1H390JT +1608 | | | |
| | C106 | | 00D 254 4300 947 | CE04W0J470MT(SRE) | | | |
| | C107-109 | nsp | 00D 257 0512 903 | CK73F1E104ZT +1608 | | | |
| | C111 | nsp | 00D 257 0511 904 | CK73F1H103ZT +1608 | | | |
| | C121-124 | nsp | 00D 257 0501 901 | CK73B1H103KT (1608) +1608 | | | |
| | C125 | nsp | 00D 257 0511 904 | CK73F1H103ZT +1608 | | | |
| | C126 | nsp | 00D 257 0509 929 | CK73B1H102KT +1608 | | | |
| | C192 | nsp | 00D 254 4538 900 | CE04W1C100MT SMG/RE3 | | | |
| | C194 | nsp | 00D 254 4524 943 | CE04W1H010MT SMG/RE3 | | | |
| | C202 | nsp | 00D 257 0511 904 | CK73F1H103ZT +1608 | | | |
| | C901 | | 00D 256 8038 004 | CF99--2EAC104M | | | |
| | C902,903 | | 00D 253 8029 713 | CK45F2EAC471KC(KX) | | | |
| | C904 | | 00D 254 4588 714 | CE04W2D221MC(KMG) | | | |
| | C905,906 | | 00D 253 8029 713 | CK45F2EAC471KC(KX) | | | |
| | C907 | nsp | 00D 254 4525 913 | CE04W1H470MT SMG/RE3 | | | |
| | C909 | nsp | 00D 254 4525 913 | CE04W1H470MT SMG/RE3 | | | |
| | C910 | | 00D 256 8038 004 | CF99--2EAC104M | | | |
| | C912 | | 00D 253 8029 713 | CK45F2EAC471KC(KX) | | | |
| | C913,914 | | 00D 254 4713 709 | CE04W1E102MC J30(KY) | | | |
| | C916,917 | | 00D 254 4770 700 | CE04W0J562MC(KY)K35 | | | |
| | C918 | | 00D 254 4675 902 | CE04W2A220MT(KMF) | | | |
| | C919 | | 00D 254 4770 700 | CE04W0J562MC(KY)K35 | | | |
| | C920,921 | | 00D 254 4651 900 | CE04W0J331MT(KY)E11 | | | |
| | C922 | | 00D 254 4770 700 | CE04W0J562MC(KY)K35 | | | |
| | C923 | nsp | 00D 254 4538 900 | CE04W1C100MT SMG/RE3 | | | |

| | Ref. No. | nsp | Part No. | Part Name | Remarks | Q'ty | New |
|---|---|---|---|---|---|---|---|
| | C925 | | 00D 254 4536 957 | CE04W1A471MT SMG/RE3 | | | |
| | C926 | | 00D 254 4542 705 | CE04W1E471MC SMG/RE3 | | | |
| | C927 | | 00D 254 4536 957 | CE04W1A471MT SMG/RE3 | | | |
| | C929 | nsp | 00D 254 4538 955 | CE04W1C221MT SMG/RE3 | | | |
| | C930 | nsp | 00D 257 0512 903 | CK73F1E104ZT +1608 | | | |
| | C931 | nsp | 00D 257 0511 920 | CK73F1H473ZT +1608 | | | |
| | C932 | nsp | 00D 254 4538 900 | CE04W1C100MT SMG/RE3 | | | |
| | C935,936 | nsp | 00D 257 0512 903 | CK73F1E104ZT +1608 | | | |
| | C937 | nsp | 00D 254 4538 900 | CE04W1C100MT SMG/RE3 | | | |
| | C938 | nsp | 00D 257 0506 951 | CC73CH1H101JT +1608 | | | |
| | C939 | nsp | 00D 257 0511 904 | CK73F1H103ZT +1608 | | | |
| | C940 | nsp | 00D 254 4538 900 | CE04W1C100MT SMG/RE3 | | | |
| | C941-943 | nsp | 00D 254 4524 901 | CE04W1H0R1MT SMG/RE3 | | | |
| | C944 | nsp | 00D 254 4533 921 | CE04W0J101MT SMG/RE3 | | | |
| | C945 | nsp | 00D 257 0512 903 | CK73F1E104ZT +1608 | | | |
| | C946 | nsp | 00D 254 4538 939 | CE04W1C470MT SMG/RE3 | | | |
| | C947 | nsp | 00D 257 0511 904 | CK73F1H103ZT +1608 | | | |
| | C948 | nsp | 00D 254 4524 943 | CE04W1H010MT SMG/RE3 | | | |
| | C949,950 | nsp | 00D 254 4524 901 | CE04W1H0R1MT SMG/RE3 | | | |
| | C952-954 | nsp | 00D 257 0512 903 | CK73F1E104ZT +1608 | | | |
| | C955 | | 00D 254 4770 700 | CE04W0J562MC(KY)K35 | | | |
| | C956 | nsp | 00D 257 0512 903 | CK73F1E104ZT +1608 | | | |
| | C958 | nsp | 00D 257 0512 903 | CK73F1E104ZT +1608 | | | |
| | C959 | nsp | 00D 257 0511 904 | CK73F1H103ZT +1608 | | | |
| | C960 | nsp | 00D 257 0512 903 | CK73F1E104ZT +1608 | | | |
| | C961 | nsp | 00D 257 0506 951 | CC73CH1H101JT +1608 | | | |
| ⚠ | C962 | | 00D 253 8022 707 | CK45F2EAC103MC | | | |
| | C963 | nsp | 00D 257 0509 929 | CK73B1H102KT +1608 | | | |
| | C964 | nsp | 00D 257 0506 951 | CC73CH1H101JT +1608 | | | |
| | C965 | nsp | 00D 257 0509 929 | CK73B1H102KT +1608 | | | |
| | C966 | nsp | 00D 257 0512 903 | CK73F1E104ZT +1608 | | | |
| | C967 | | 00D 254 4693 939 | CE04W1H101MT(RF0) | | | |
| | C968 | nsp | 00D 257 0511 904 | CK73F1H103ZT +1608 | | | |
| | C969,970 | nsp | 00D 257 0512 903 | CK73F1E104ZT +1608 | | | |
| | C977 | nsp | 00D 257 0512 903 | CK73F1E104ZT +1608 | | | |
| | C978 | nsp | 00D 254 4538 900 | CE04W1C100MT SMG/RE3 | | | |
| | C980 | nsp | 00D 257 0512 903 | CK73F1E104ZT +1608 | | | |
| | C981 | nsp | 00D 254 4538 900 | CE04W1C100MT SMG/RE3 | | | |
| | C982,983 | nsp | 00D 257 0516 954 | CK73B1E104KT +1608 | | | |
| | C984 | | 00D 254 4693 939 | CE04W1H101MT(RF0) | | | |
| | C985 | nsp | 00D 247 2018 903 | RM73B--0R0KT +1608 | | | |
| | C989 | nsp | 00D 257 0512 903 | CK73F1E104ZT +1608 | | | |
| | C990,991 | nsp | 00D 254 4538 900 | CE04W1C100MT SMG/RE3 | | | |
| ⚠ | C999 | | 00D 253 8022 707 | CK45F2EAC103MC | | | |
| | | | | | | | |
| **OTHERS PARTS GROUP** | | | | | | | |
| | AS901,902 | | - | RADIATOR | | | |
| | AS904 | | - | RADIATOR(PUE26) | | | |
| | | | | | | | |
| | CW031 | nsp | 00D 203 5343 057 | 3P PH-SAN CON.CORD | | | |
| | CW038 | nsp | 00D 203 5394 006 | 3P PH-SAN CON.CORD | | | |
| | CW052 | nsp | 00D 203 8549 010 | 5P PH-SAN CON.CORD | | | |
| | CW071 | nsp | 00D 204 3008 025 | 7P PH-SAN CON.CORD | | | |
| | CW132 | nsp | 00D 204 6696 023 | 13P PH-SAN CON.CORD | | | |

| | Ref. No. | nsp | Part No. | Part Name | Remarks | Q'ty | New |
|---|---|---|---|---|---|---|---|
| | CX024 | nsp | 00D 205 0581 001 | 2P VH CONNECTOR BASE | | | |
| | CX025 | nsp | 00D 205 0581 056 | 2P VH CONNECTOR BASE | | | |
| | CX026 | nsp | 00D 205 1093 006 | 2P VH CONNECTOR BASA | | | |
| | CX031 | nsp | 00D 205 0343 032 | 3P CONN.BASE(KR-PH) | | | |
| | CX044 | nsp | 00D 205 0343 045 | 4P CONN.BASE(KR-PH) | | | |
| | CX064 | nsp | 00D 205 0653 065 | 6P VH CONNECTOR BASE | | | |
| | CX122 | nsp | 00D 205 0536 027 | 12P CONNE SOCKET | | | |
| | CX123 | nsp | 00D 205 1326 029 | 12P SOCKET(9120) | | | |
| | CX125 | nsp | 00D 205 0536 027 | 12P CONNE SOCKET | | | |
| | CX128 | nsp | 00D 205 1386 085 | 12P BASE(9115B-PT1) | | | |
| | CX161,162 | nsp | 00D 205 1326 061 | 16P SOCKT(9120) | | | |
| | CY025 | nsp | 00D 205 0581 056 | 2P VH CONNECTOR BASE | | | |
| | CY052 | nsp | 00D 205 0343 058 | 5P CONN.BASE(KR-PH) | | | |
| | CY061 | nsp | 00D 205 0536 030 | 6P CONNE SOCKET | | | |
| | CY122 | nsp | 00D 205 0536 027 | 12P CONNE SOCKET | | | |
| | CY123 | nsp | 00D 205 1326 029 | 12P SOCKET(9120) | | | |
| | CY125 | nsp | 00D 205 0536 027 | 12P CONNE SOCKET | | | |
| | CY128 | nsp | 00D 205 1386 085 | 12P BASE(9115B-PT1) | | | |
| | CY161,162 | nsp | 00D 205 1326 061 | 16P SOCKT(9120) | | | |
| ⚠ | F901 | | 00D 206 1094 037 | FUSE(233)T2AL125V | | | |
| | FF901 | nsp | 00D 202 0040 909 | FUSE CLIP(TAPE) | | | |
| | FH901 | nsp | 00D 202 0040 909 | FUSE CLIP(TAPE) | | | |
| | JK102 | | 00D 204 8728 009 | 1P PIN JACK(BK)-LF | | | |
| | JK901 | | 00D 205 1153 001 | 9P S SUB CONNECTOR | | | |
| | JK902 | | 00D 204 8729 008 | 2P MINI JACK | | | |
| | L901 | | 00D 235 0157 009 | PLA10AN7720R7D2B | | | |
| | L902 | | 00D 235 0142 917 | COIL LHL08TB4R7MT | | | |
| | L904,905 | | 00D 235 0142 917 | COIL LHL08TB4R7MT | | | |
| | RL901 | | 00D 214 0202 009 | RELAY DG1U TV-8 | | | |
| | S101-108 | | 00D 212 5604 910 | TACT SWITCH-TA(ALPS) | | | |
| | S109 | | 00D 212 5611 903 | TACT SWITCH(TAPE H5) | | | |
| | S111 | | 00D 212 5604 910 | TACT SWITCH-TA(ALPS) | | | |
| | S112 | | 00D 212 0525 007 | ROT.ENCODER EC11B20 | | | |
| ⚠ | S999 | | 00D 212 1030 009 | POWER SWITCH (TV-5) | | | |
| ⚠ | T901 | | 00D 233 0686 008 | SW TRANS (100/120) | | | |
| | W101 | | - | 1P LUG-SIN WIRE | | | |
| | W104 | | - | M3-SCREW-TERMINAL08R | | | |
| | W106 | | - | 1P LUG-SIN WIRE | | | |
| | W903,904 | | - | M3-SCREW-TERMINAL08R | | | |
| | W906,907 | | - | 1P SIN CORD ASSY | | | |
| | | nsp | 0RD 471 3303 016 | 3X6 CBS-Z | | | |
| | | nsp | 00D 461 0991 026 | RUBBER SHEET | | | |

## 00DGU-3751B AUDIO P.W.B. UNIT ASS'Y

| | Ref. No. | nsp | Part No. | Part Name | Remarks | Q'ty | New |
|---|---|---|---|---|---|---|---|
| **SEMICONDUCTORS GROUP** | | | | | | | |
| | IC102 | | 00D 262 2977 917 | BA25BC0FP-E2 | | | |
| | IC103 | | 00D 262 3588 004 | EP2C8Q208C8N | | | |
| | IC104 | | 00D 263 1205 900 | PQ012FZ01ZP +C | | | |
| | IC105 | | 00D 262 3366 912 | EPCS1-SI8-C2F6E6 | | | |
| | IC106 | | 00D 262 3380 008 | AK4101AVQ | | | |
| | IC107 | | 00D 262 3449 004 | LC89057W-VF4A | | | |
| | IC303 | | 00D 262 3589 003 | D708E001RFP250 | | | |
| | IC305 | | 00D GEN 8250 | DSP ROM SUB ASSY | MBM29LV160BE90TN | | |
| | IC306 | | 00D 263 1205 900 | PQ012FZ01ZP +C | | | |
| | IC401 | | 00D 262 3362 903 | PCM1796DBR | | | * |
| | IC402-405 | | 00D 263 0615 902 | BA15218F-DXE2 +C | | | |
| | IC406 | | 00D 262 3362 903 | PCM1796DBR | | | * |
| | IC407-410 | | 00D 263 0615 902 | BA15218F-DXE2 +C | | | |
| | IC411 | | 00D 262 3362 903 | PCM1796DBR | | | * |
| | IC412-415 | | 00D 263 0615 902 | BA15218F-DXE2 +C | | | |
| | IC701 | | 00D 263 0913 905 | PST600C TP | | | |
| | IC702 | | 00D 262 3362 903 | PCM1796DBR | | | * |
| | IC703-705 | | 00D 263 0615 902 | BA15218F-DXE2 +C | | | |
| | IC706 | | 00D 263 1074 908 | OP275GSR +C | | | |
| | IC707 | | 00D 262 3362 903 | PCM1796DBR | | | * |
| | IC708-710 | | 00D 263 0615 902 | BA15218F-DXE2 +C | | | |
| | IC711 | | 00D 263 1074 908 | OP275GSR +C | | | |
| | IC801 | | 00D 263 1100 021 | KIA7812API | | | |
| | IC802 | | 00D 263 1099 022 | KIA7912PI | | | |
| | IC803 | | 00D 263 1100 050 | KIA7808API | | | |
| | IC804 | | 00D 263 1100 005 | KIA7805API | | | |
| | TR402,403 | | 00D 269 0119 901 | DTA124EKT96(TAPE) +C | | | |
| | TR404,405 | | 00D 269 0082 902 | DTC114EKT96 +C | | | |
| | TR406,407 | | 00D 273 0460 905 | KTC2875B-RTK +C | | | |
| | TR408-413 | | 00D 269 0119 901 | DTA124EKT96(TAPE) +C | | | |
| | TR414-419 | | 00D 269 0082 902 | DTC114EKT96 +C | | | |
| | TR420-442 | | 00D 273 0460 905 | KTC2875B-RTK +C | | | |
| | TR701 | | 00D 273 0487 904 | 2SC2412K_T146R | | | |
| | TR702 | | 00D 269 0083 901 | DTA114EKT96 +C | | | |
| | TR703 | | 00D 269 0119 901 | DTA124EKT96(TAPE) +C | | | |
| | TR704 | | 00D 273 0487 904 | 2SC2412K_T146R | | | |
| | TR705 | | 00D 269 0119 901 | DTA124EKT96(TAPE) +C | | | |
| | TR706 | | 00D 269 0082 902 | DTC114EKT96 +C | | | |
| | TR707,708 | | 00D 273 0460 905 | KTC2875B-RTK +C | | | |
| | TR709 | | 00D 269 0119 901 | DTA124EKT96(TAPE) +C | | | |
| | TR710 | | 00D 269 0082 902 | DTC114EKT96 +C | | | |
| | TR711 | | 00D 269 0119 901 | DTA124EKT96(TAPE) +C | | | |
| | TR712 | | 00D 269 0082 902 | DTC114EKT96 +C | | | |
| | TR715-718 | | 00D 273 0460 905 | KTC2875B-RTK +C | | | |
| | TR721,722 | | 00D 273 0460 905 | KTC2875B-RTK +C | | | |
| | TR723 | | 00D 269 0082 902 | DTC114EKT96 +C | | | |
| | D101,102 | | 00D 276 0717 903 | 1SS355 TE-17 +C | | | |
| | D301,302 | | 00D 276 0401 905 | 1SS133T77 (TAPE) | | | |
| | D701,702 | | 00D 276 0717 903 | 1SS355 TE-17 +C | | | |
| | D801-804 | | 00D 276 0701 003 | S2L20U-4002P7.5 | | | |
| | D805,806 | | 00D 276 0723 900 | RB721Q-40 | | | |

| | Ref. No. | nsp | Part No. | Part Name | Remarks | Q'ty | New |
|---|---|---|---|---|---|---|---|
| **RESISTORS GROUP** | | | | | | | |
| | R585-591 | | 00D 241 2465 985 | RD14B2E151JT(AMRS) | | | |
| | R594 | | 00D 241 2465 985 | RD14B2E151JT(AMRS) | | | |
| | R597,598 | | 00D 241 2465 985 | RD14B2E151JT(AMRS) | | | |
| | R602 | | 00D 241 2465 985 | RD14B2E151JT(AMRS) | | | |
| | R721 | | 00D 244 2052 986 | RS14B3A751JNBST(S) | | | |
| | R751,752 | | 00D 244 2052 986 | RS14B3A751JNBST(S) | | | |
| | R768-775 | | 00D 241 2467 954 | RD14B2E751JT(AMRS) | | | |
| | R851 | | 00D 244 2051 974 | RS14B3A102JNBST(S) | | | |
| | R852 | | 00D 244 2043 940 | RS14B3A222JNBST(S) | | | |
| | RR500 | | 00D 241 2465 985 | RD14B2E151JT(AMRS) | | | |
| | RR733,734 | | 00D 241 2466 955 | RD14B2E301JT(AMRS) | | | |
| | RR739 | | 00D 241 2466 955 | RD14B2E301JT(AMRS) | | | |
| | RR742 | | 00D 241 2466 955 | RD14B2E301JT(AMRS) | | | |
| | RR755-758 | | 00D 241 2466 955 | RD14B2E301JT(AMRS) | | | |
| **CAPACITORS GROUP** | | | | | | | |
| | C101 | nsp | 00D 257 0511 904 | CK73F1H103ZT +1608 | | | |
| | C103 | nsp | 00D 257 0511 904 | CK73F1H103ZT +1608 | | | |
| | C104 | nsp | 00D 257 0512 903 | CK73F1E104ZT +1608 | | | |
| | C106 | nsp | 00D 257 0512 903 | CK73F1E104ZT +1608 | | | |
| | C107 | nsp | 00D 257 0509 929 | CK73B1H102KT +1608 | | | |
| | C108 | nsp | 00D 257 0512 903 | CK73F1E104ZT +1608 | | | |
| | C109-115 | nsp | 00D 257 0509 929 | CK73B1H102KT +1608 | | | |
| | C116 | nsp | 00D 257 0512 903 | CK73F1E104ZT +1608 | | | |
| | C117 | nsp | 00D 254 4538 900 | CE04W1C100MT SMG/RE3 | | | |
| | C118,119 | nsp | 00D 257 0512 903 | CK73F1E104ZT +1608 | | | |
| | C120 | nsp | 00D 257 0516 954 | CK73B1E104KT +1608 | | | |
| | C121,122 | nsp | 00D 257 0509 929 | CK73B1H102KT +1608 | | | |
| | C123 | nsp | 00D 257 0512 903 | CK73F1E104ZT +1608 | | | |
| | C124-129 | nsp | 00D 257 0509 929 | CK73B1H102KT +1608 | | | |
| | C130 | nsp | 00D 257 0511 904 | CK73F1H103ZT +1608 | | | |
| | C131 | | 00D 254 4693 939 | CE04W1H101MT(RF0) | | | |
| | C132 | nsp | 00D 257 0512 903 | CK73F1E104ZT +1608 | | | |
| | C133 | nsp | 00D 257 0511 904 | CK73F1H103ZT +1608 | | | |
| | C134 | nsp | 00D 257 0512 903 | CK73F1E104ZT +1608 | | | |
| | C135 | nsp | 00D 257 0511 904 | CK73F1H103ZT +1608 | | | |
| | C136,137 | nsp | 00D 257 0512 903 | CK73F1E104ZT +1608 | | | |
| | C138 | nsp | 00D 257 0509 929 | CK73B1H102KT +1608 | | | |
| | C139 | nsp | 00D 257 0511 904 | CK73F1H103ZT +1608 | | | |
| | C140 | nsp | 00D 257 0512 903 | CK73F1E104ZT +1608 | | | |
| | C141,142 | nsp | 00D 257 0509 929 | CK73B1H102KT +1608 | | | |
| | C143 | nsp | 00D 257 0516 954 | CK73B1E104KT +1608 | | | |
| | C144 | nsp | 00D 257 0509 929 | CK73B1H102KT +1608 | | | |
| | C149 | nsp | 00D 257 0511 904 | CK73F1H103ZT +1608 | | | |
| | C150 | nsp | 00D 254 4538 900 | CE04W1C100MT SMG/RE3 | | | |
| | C151 | | 00D 254 4533 950 | CE04W0J471MT SMG/RE3 | | | |
| | C152 | nsp | 00D 257 0512 903 | CK73F1E104ZT +1608 | | | |
| | C153-158 | nsp | 00D 257 0509 929 | CK73B1H102KT +1608 | | | |
| | C159 | nsp | 00D 257 0512 903 | CK73F1E104ZT +1608 | | | |
| | C160 | nsp | 00D 257 0509 929 | CK73B1H102KT +1608 | | | |
| | C161 | nsp | 00D 257 0512 903 | CK73F1E104ZT +1608 | | | |
| | C162 | nsp | 00D 254 4538 900 | CE04W1C100MT SMG/RE3 | | | |
| | C163 | nsp | 00D 257 0516 954 | CK73B1E104KT +1608 | | | |

| | Ref. No. | nsp | Part No. | Part Name | Remarks | Q'ty | New |
|---|---|---|---|---|---|---|---|
| | C164 | nsp | 00D 257 0509 929 | CK73B1H102KT +1608 | | | |
| | C165 | nsp | 00D 254 4533 921 | CE04W0J101MT SMG/RE3 | | | |
| | C170 | nsp | 00D 257 0509 929 | CK73B1H102KT +1608 | | | |
| | C171 | nsp | 00D 257 0512 903 | CK73F1E104ZT +1608 | | | |
| | C172 | nsp | 00D 254 4533 921 | CE04W0J101MT SMG/RE3 | | | |
| | C173 | nsp | 00D 257 0512 903 | CK73F1E104ZT +1608 | | | |
| | C174 | nsp | 00D 257 0509 929 | CK73B1H102KT +1608 | | | |
| | C175 | nsp | 00D 257 0516 954 | CK73B1E104KT +1608 | | | |
| | C176 | nsp | 00D 257 0512 903 | CK73F1E104ZT +1608 | | | |
| | C177 | nsp | 00D 257 0516 909 | CK73B1E223KT +1608 | | | |
| | C178 | nsp | 00D 257 0516 954 | CK73B1E104KT +1608 | | | |
| | C179,180 | nsp | 00D 257 0512 903 | CK73F1E104ZT +1608 | | | |
| | C181 | nsp | 00D 257 0511 904 | CK73F1H103ZT +1608 | | | |
| | C182 | nsp | 00D 257 0509 929 | CK73B1H102KT +1608 | | | |
| | C183 | nsp | 00D 257 0502 955 | CC73CH1H3R0CT +1608 | | | |
| | C184 | nsp | 00D 257 0509 929 | CK73B1H102KT +1608 | | | |
| | C185 | nsp | 00D 257 0502 955 | CC73CH1H3R0CT +1608 | | | |
| | C186-188 | nsp | 00D 257 0512 903 | CK73F1E104ZT +1608 | | | |
| | C189 | nsp | 00D 257 0511 904 | CK73F1H103ZT +1608 | | | |
| | C190 | nsp | 00D 257 0509 929 | CK73B1H102KT +1608 | | | |
| | C218 | nsp | 00D 257 0511 904 | CK73F1H103ZT +1608 | | | |
| | C219 | nsp | 00D 257 0512 903 | CK73F1E104ZT +1608 | | | |
| | C220 | nsp | 00D 257 0511 904 | CK73F1H103ZT +1608 | | | |
| | C221 | nsp | 00D 257 0512 903 | CK73F1E104ZT +1608 | | | |
| | C222 | nsp | 00D 257 0511 904 | CK73F1H103ZT +1608 | | | |
| | C223 | nsp | 00D 257 0512 903 | CK73F1E104ZT +1608 | | | |
| | C224 | nsp | 00D 257 0511 904 | CK73F1H103ZT +1608 | | | |
| | C225 | nsp | 00D 257 0512 903 | CK73F1E104ZT +1608 | | | |
| | C226 | nsp | 00D 257 0511 904 | CK73F1H103ZT +1608 | | | |
| | C227,228 | nsp | 00D 257 0512 903 | CK73F1E104ZT +1608 | | | |
| | C229 | nsp | 00D 257 0511 904 | CK73F1H103ZT +1608 | | | |
| | C230 | nsp | 00D 254 4533 921 | CE04W0J101MT SMG/RE3 | | | |
| | C231 | nsp | 00D 257 0509 929 | CK73B1H102KT +1608 | | | |
| | C232 | nsp | 00D 257 0512 903 | CK73F1E104ZT +1608 | | | |
| | C233 | | 00D 257 2015 929 | CS77B1A220MT | | | |
| | C301 | nsp | 00D 257 0512 903 | CK73F1E104ZT +1608 | | | |
| | C302 | nsp | 00D 257 0509 929 | CK73B1H102KT +1608 | | | |
| | C303 | nsp | 00D 254 4538 900 | CE04W1C100MT SMG/RE3 | | | |
| | C305 | nsp | 00D 257 0512 903 | CK73F1E104ZT +1608 | | | |
| | C306 | | 00D 254 4533 950 | CE04W0J471MT SMG/RE3 | | | |
| | C307 | nsp | 00D 257 0512 903 | CK73F1E104ZT +1608 | | | |
| | C308 | nsp | 00D 257 0509 929 | CK73B1H102KT +1608 | | | |
| | C309 | nsp | 00D 257 0512 903 | CK73F1E104ZT +1608 | | | |
| | C310 | nsp | 00D 257 0509 929 | CK73B1H102KT +1608 | | | |
| | C311 | nsp | 00D 257 0512 903 | CK73F1E104ZT +1608 | | | |
| | C312,313 | nsp | 00D 257 0509 929 | CK73B1H102KT +1608 | | | |
| | C314 | nsp | 00D 257 0512 903 | CK73F1E104ZT +1608 | | | |
| | C315 | nsp | 00D 257 0509 929 | CK73B1H102KT +1608 | | | |
| | C316 | nsp | 00D 257 0512 903 | CK73F1E104ZT +1608 | | | |
| | C317 | nsp | 00D 257 0509 929 | CK73B1H102KT +1608 | | | |
| | C318 | nsp | 00D 257 0512 903 | CK73F1E104ZT +1608 | | | |
| | C319 | | 00D 254 4533 950 | CE04W0J471MT SMG/RE3 | | | |
| | C320 | nsp | 00D 254 4538 900 | CE04W1C100MT SMG/RE3 | | | |
| | C323 | nsp | 00D 257 0509 929 | CK73B1H102KT +1608 | | | |
| | C324 | nsp | 00D 257 0512 903 | CK73F1E104ZT +1608 | | | |
| | C327 | nsp | 00D 257 0508 917 | CC73CH1H471JT +1608 | | | |

| | Ref. No. | nsp | Part No. | Part Name | Remarks | Q'ty | New |
|---|---|---|---|---|---|---|---|
| | C328,329 | nsp | 00D 257 0503 909 | CC73CH1H8R0DT +1608 | | | |
| | C330 | nsp | 00D 257 0508 917 | CC73CH1H471JT +1608 | | | |
| | C331 | nsp | 00D 257 0509 929 | CK73B1H102KT +1608 | | | |
| | C332 | nsp | 00D 254 4533 921 | CE04W0J101MT SMG/RE3 | | | |
| | C333 | nsp | 00D 257 0512 903 | CK73F1E104ZT +1608 | | | |
| | C334 | nsp | 00D 257 0509 929 | CK73B1H102KT +1608 | | | |
| | C335 | nsp | 00D 257 0512 903 | CK73F1E104ZT +1608 | | | |
| | C336,337 | nsp | 00D 257 0509 929 | CK73B1H102KT +1608 | | | |
| | C338 | nsp | 00D 257 0512 903 | CK73F1E104ZT +1608 | | | |
| | C339 | nsp | 00D 257 0509 929 | CK73B1H102KT +1608 | | | |
| | C340 | nsp | 00D 257 0512 903 | CK73F1E104ZT +1608 | | | |
| | C341 | nsp | 00D 257 0509 929 | CK73B1H102KT +1608 | | | |
| | C342 | nsp | 00D 257 0512 903 | CK73F1E104ZT +1608 | | | |
| | C343 | nsp | 00D 257 0509 929 | CK73B1H102KT +1608 | | | |
| | C344,345 | nsp | 00D 257 0512 903 | CK73F1E104ZT +1608 | | | |
| | C346 | nsp | 00D 257 0509 929 | CK73B1H102KT +1608 | | | |
| | C347 | nsp | 00D 257 0512 903 | CK73F1E104ZT +1608 | | | |
| | C348,349 | nsp | 00D 257 0509 929 | CK73B1H102KT +1608 | | | |
| | C350 | nsp | 00D 257 0512 903 | CK73F1E104ZT +1608 | | | |
| | C351 | nsp | 00D 257 0509 929 | CK73B1H102KT +1608 | | | |
| | C352 | nsp | 00D 257 0512 903 | CK73F1E104ZT +1608 | | | |
| | C353 | nsp | 00D 257 0509 929 | CK73B1H102KT +1608 | | | |
| | C354 | nsp | 00D 257 0512 903 | CK73F1E104ZT +1608 | | | |
| | C357 | nsp | 00D 254 4538 900 | CE04W1C100MT SMG/RE3 | | | |
| | C358 | nsp | 00D 257 0512 903 | CK73F1E104ZT +1608 | | | |
| | C359 | nsp | 00D 257 0509 929 | CK73B1H102KT +1608 | | | |
| | C360 | nsp | 00D 254 4538 900 | CE04W1C100MT SMG/RE3 | | | |
| | C361 | nsp | 00D 257 0512 903 | CK73F1E104ZT +1608 | | | |
| | C362 | nsp | 00D 257 0509 929 | CK73B1H102KT +1608 | | | |
| | C363 | nsp | 00D 257 0512 903 | CK73F1E104ZT +1608 | | | |
| | C364 | nsp | 00D 257 0509 929 | CK73B1H102KT +1608 | | | |
| | C369 | | 00D 254 4533 950 | CE04W0J471MT SMG/RE3 | | | |
| | C370 | nsp | 00D 257 0511 904 | CK73F1H103ZT +1608 | | | |
| | C371 | nsp | 00D 257 0512 903 | CK73F1E104ZT +1608 | | | |
| | C372 | nsp | 00D 257 0509 929 | CK73B1H102KT +1608 | | | |
| | C401 | nsp | 00D 257 0516 954 | CK73B1E104KT +1608 | | | |
| | C402-404 | nsp | 00D 257 0501 901 | CK73B1H103KT (1608) +1608 | | | |
| | C405,406 | nsp | 00D 257 0512 903 | CK73F1E104ZT +1608 | | | |
| | C407,408 | | 00D 254 4693 939 | CE04W1H101MT(RF0) | | | |
| | C409-411 | nsp | 00D 257 0501 901 | CK73B1H103KT (1608) +1608 | | | |
| | C412 | nsp | 00D 257 0506 951 | CC73CH1H101JT +1608 | | | |
| | C413-416 | | 00D 257 3006 911 | CF73=1C104JT(ECHUB5)+3225 | | | |
| | C417-420 | | 00D 254 4693 926 | CE04W1H470MT(RF0) | | | |
| | C421,422 | nsp | 00D 257 0512 903 | CK73F1E104ZT +1608 | | | |
| | C423-426 | | 00D 254 4692 901 | CE04W1J100MT(RF0) | | | |
| | C427-430 | nsp | 00D 257 0512 903 | CK73F1E104ZT +1608 | | | |
| | C439-446 | nsp | 00D 257 0512 903 | CK73F1E104ZT +1608 | | | |
| | C447-454 | | 00D 257 3011 919 | CF73=1H102JT(ECHUB5)+2125 | | | |
| | C455-458 | | 00D 257 3006 908 | CF73=1C682JT(ECHUB5)+2125 | | | |
| | C459-462 | | 00D 257 3014 974 | CF73=1C183JT(ECHUB5)+3216 | | | |
| | C463-470 | | 00D 257 3011 948 | CF73=1H222JT(ECHUB5)+2125 | | | |
| | C471,472 | nsp | 00D 257 0506 951 | CC73CH1H101JT +1608 | | | |
| | C473,474 | | 00D 255 4256 955 | CQ93P2A103JT(NH2) | | | |
| | C475-482 | nsp | 00D 257 0512 903 | CK73F1E104ZT +1608 | | | |
| | C483 | | 00D 255 4256 955 | CQ93P2A103JT(NH2) | | | |
| | C484-486 | nsp | 00D 257 0506 951 | CC73CH1H101JT +1608 | | | |

| Ref. No. | nsp | Part No. | Part Name | Remarks | Q'ty | New |
|---|---|---|---|---|---|---|
| C487-489 | | 00D 254 4692 901 | CE04W1J100MT(RF0) | | | |
| C490 | nsp | 00D 257 0506 951 | CC73CH1H101JT +1608 | | | |
| C491-494 | nsp | 00D 257 0503 925 | CC73CH1H100DT +1608 | | | |
| C495,496 | nsp | 00D 257 0506 951 | CC73CH1H101JT +1608 | | | |
| C497,498 | | 00D 257 3006 911 | CF73=1C104JT(ECHUB5)+3225 | | | |
| C499 | | 00D 254 4693 926 | CE04W1H470MT(RF0) | | | |
| C503,504 | | 00D 254 4580 709 | CE04W1H221MC(ROB) | | | |
| C506 | nsp | 00D 257 0516 954 | CK73B1E104KT +1608 | | | |
| C507 | nsp | 00D 257 0501 901 | CK73B1H103KT (1608) +1608 | | | |
| C703 | nsp | 00D 257 0516 954 | CK73B1E104KT +1608 | | | |
| C704 | nsp | 00D 257 0501 901 | CK73B1H103KT (1608) +1608 | | | |
| C705 | nsp | 00D 257 0516 954 | CK73B1E104KT +1608 | | | |
| C706 | nsp | 00D 257 0501 901 | CK73B1H103KT (1608) +1608 | | | |
| C710 | | 00D 254 4750 704 | CE04W1H471MC(RFO) | | | |
| C713 | nsp | 00D 257 0501 901 | CK73B1H103KT (1608) +1608 | | | |
| C714 | nsp | 00D 257 0506 951 | CC73CH1H101JT +1608 | | | |
| C715 | nsp | 00D 257 0501 901 | CK73B1H103KT (1608) +1608 | | | |
| C716 | nsp | 00D 257 0506 951 | CC73CH1H101JT +1608 | | | |
| C717 | | 00D 257 3006 924 | CF73=1C103JT(ECHUB5)+2125 | | | |
| C718 | nsp | 00D 257 0506 951 | CC73CH1H101JT +1608 | | | |
| C719 | | 00D 254 4693 939 | CE04W1H101MT(RF0) | | | |
| C720 | nsp | 00D 257 0506 951 | CC73CH1H101JT +1608 | | | |
| C721 | | 00D 257 3006 924 | CF73=1C103JT(ECHUB5)+2125 | | | |
| C722 | nsp | 00D 257 0506 951 | CC73CH1H101JT +1608 | | | |
| C724 | | 00D 254 4693 939 | CE04W1H101MT(RF0) | | | |
| C725 | nsp | 00D 257 0506 951 | CC73CH1H101JT +1608 | | | |
| C731 | | 00D 257 3006 924 | CF73=1C103JT(ECHUB5)+2125 | | | |
| C734 | | 00D 257 3006 924 | CF73=1C103JT(ECHUB5)+2125 | | | |
| C736-739 | | 00D 254 4702 956 | CE04W1H100MT(RFS#A) | | | |
| C740-743 | | 00D 254 4693 939 | CE04W1H101MT(RF0) | | | |
| C748 | nsp | 00D 257 0501 901 | CK73B1H103KT (1608) +1608 | | | |
| C750,751 | nsp | 00D 257 0501 901 | CK73B1H103KT (1608) +1608 | | | |
| C753,754 | nsp | 00D 257 0501 901 | CK73B1H103KT (1608) +1608 | | | |
| C756,757 | nsp | 00D 257 0501 901 | CK73B1H103KT (1608) +1608 | | | |
| C759 | nsp | 00D 257 0501 901 | CK73B1H103KT (1608) +1608 | | | |
| C768-775 | | 00D 255 4254 915 | CQ93P2A102JT(NH2) | | | |
| C776-779 | | 00D 255 4253 974 | CQ93P2A681JT(NH2) | | | |
| C780 | nsp | 00D 257 0501 901 | CK73B1H103KT (1608) +1608 | | | |
| C781,782 | | 00D 255 4253 974 | CQ93P2A681JT(NH2) | | | |
| C783,784 | nsp | 00D 257 0501 901 | CK73B1H103KT (1608) +1608 | | | |
| C785,786 | | 00D 255 4253 974 | CQ93P2A681JT(NH2) | | | |
| C787 | nsp | 00D 257 0501 901 | CK73B1H103KT (1608) +1608 | | | |
| C788,789 | | 00D 255 4256 913 | CQ93P2A682JT(NH2) | | | |
| C790,791 | | 00D 255 4257 912 | CQ93P2A183JT(NH2) | | | |
| C792-795 | | 00D 255 4254 999 | CQ93P2A222JT(NH2) | | | |
| C796,797 | | 00D 254 4580 712 | CE04W1H101MC(ROB) | | | |
| C798,799 | | 00D 254 3091 901 | CE04D1H220MBPT (RBD) | | | |
| C800 | nsp | 00D 257 0501 901 | CK73B1H103KT (1608) +1608 | | | |
| C801 | nsp | 00D 257 0512 903 | CK73F1E104ZT +1608 | | | |
| C802 | | 00D 254 4693 939 | CE04W1H101MT(RF0) | | | |
| C803 | nsp | 00D 257 0501 901 | CK73B1H103KT (1608) +1608 | | | |
| C804 | nsp | 00D 257 0512 903 | CK73F1E104ZT +1608 | | | |
| C805 | | 00D 254 4693 939 | CE04W1H101MT(RF0) | | | |
| C814,815 | | 00D 254 4703 735 | CE04W1H471MC(RFS#A) | | | |
| C816-818 | | 00D 255 4256 955 | CQ93P2A103JT(NH2) | | | |
| C822 | | 00D 254 4693 939 | CE04W1H101MT(RF0) | | | |

| | Ref. No. | nsp | Part No. | Part Name | Remarks | Q'ty | New |
|---|---|---|---|---|---|---|---|
| | C823 | | 00D 255 4256 955 | CQ93P2A103JT(NH2) | | | |
| | C825 | | 00D 255 4256 955 | CQ93P2A103JT(NH2) | | | |
| | C826 | | 00D 254 4750 704 | CE04W1H471MC(RFO) | | | |
| | C851 | | 00D 255 4256 955 | CQ93P2A103JT(NH2) | | | |
| | C854,855 | | 00D 254 4787 706 | CE04W1H332MC(RFS#5) | | | |
| | CC401 | | 00D 254 4693 926 | CE04W1H470MT(RF0) | | | |
| | CC402 | nsp | 00D 257 0516 954 | CK73B1E104KT +1608 | | | |
| | CC403,404 | | 00D 254 4692 901 | CE04W1J100MT(RF0) | | | |
| | CC405,406 | nsp | 00D 257 0516 954 | CK73B1E104KT +1608 | | | |
| | CC411-414 | nsp | 00D 257 0512 903 | CK73F1E104ZT +1608 | | | |
| | CC415-418 | | 00D 257 3011 919 | CF73=1H102JT(ECHUB5)+2125 | | | |
| | CC419,420 | | 00D 257 3012 905 | CF73=1H682JT(ECHUB5)+3216 | | | |
| | CC421,422 | | 00D 257 3012 950 | CF73=1H183JT(ECHUB5) | | | |
| | CC423-426 | | 00D 257 3011 948 | CF73=1H222JT(ECHUB5)+2125 | | | |
| | CC427 | | 00D 254 4693 939 | CE04W1H101MT(RF0) | | | |
| | CC428-431 | nsp | 00D 257 0512 903 | CK73F1E104ZT +1608 | | | |
| | CC432 | | 00D 254 4693 939 | CE04W1H101MT(RF0) | | | |
| | CC433-438 | | 00D 254 3091 901 | CE04D1H220MBPT (RBD) | | | |
| | CC439,440 | nsp | 00D 257 0503 925 | CC73CH1H100DT +1608 | | | |
| | CC441 | | 00D 254 3091 901 | CE04D1H220MBPT (RBD) | | | |
| | CC442-447 | | 00D 254 4580 709 | CE04W1H221MC(ROB) | | | |
| | CC448-453 | nsp | 00D 257 0508 917 | CC73CH1H471JT +1608 | | | |
| | CC701-704 | nsp | 00D 257 0501 901 | CK73B1H103KT (1608) +1608 | | | |
| | CC705,706 | nsp | 00D 257 0503 925 | CC73CH1H100DT +1608 | | | |
| | CC711 | | 00D 256 1054 001 | CF93B1H105K(GSG) ) | | | |
| | CC713 | | 00D 256 1054 001 | CF93B1H105K(GSG) ) | | | |
| | CC716 | | 00D 254 4703 735 | CE04W1H471MC(RFS#A) | | | |
| | CC718 | | 00D 254 4703 735 | CE04W1H471MC(RFS#A) | | | |
| **OTHERS PARTS GROUP** | | | | | | | |
| | AS402 | | - | COMMON PLATE(CU 0.8) | | | |
| | AS801,802 | | - | RADIATOR | | | |
| | AS803,804 | | - | RADIATOR | | | |
| | AS910 | | - | COMMON PLATE(CU 0.8) | | | |
| | CX032 | nsp | 00D 205 0653 036 | 3P VH CON.BASE | | | |
| | CX061 | nsp | 00D 205 1386 027 | 6P BASE(9115B-PT1) | | | |
| | CX103 | nsp | 00D 205 0480 005 | 10P KR CON BASE(L) | | | |
| | CX125-127 | nsp | 00D 205 1386 085 | 12P BASE(9115B-PT1) | | | |
| | CX128 | nsp | 00D 205 0536 027 | 12P CONNE SOCKET | | | |
| | CX129 | nsp | 00D 205 1386 085 | 12P BASE(9115B-PT1) | | | |
| | CX131 | nsp | 00D 205 1383 020 | 13P-FFC-BASE(9615C) | | | |
| | CX213 | nsp | 00D 205 1383 033 | 21P-FFC-BASE(9615C) | | | |
| | CX214 | | 00D 205 1346 009 | 21P 1.25FJ CONN.BASE | | | |
| | CY044 | nsp | 00D 205 0343 045 | 4P CONN.BASE(KR-PH) | | | |
| | CY125-129 | nsp | 00D 205 0536 027 | 12P CONNE SOCKET | | | |
| | CY212 | nsp | 00D 205 1383 033 | 21P-FFC-BASE(9615C) | | | |
| | CY214 | | 00D 205 1345 000 | 21P 1.25FJ CONN.PLUG | | | |
| | CY331 | nsp | 00D 205 1383 004 | 33P-FFC-BASE(9615C) | | | |
| | FB101,102 | | 00D 235 0147 909 | E.FIL(BLM21PG221SN1)+2125 | | | |
| | FB301 | | 00D 235 0130 903 | CHIP EMIFIL(11A121) +1608 | | | |

| | Ref. No. | nsp | Part No. | Part Name | Remarks | Q'ty | New |
|---|---|---|---|---|---|---|---|
| | JK101 | | 00D 205 1222 000 | RJ-45 JACK(GND) | | | |
| | JK401-406 | | 00D 204 8728 009 | 1P PIN JACK(BK)-LF | | | |
| | JK701,702 | | 00D 204 8666 006 | 1P PIN JACK(BK) | | | |
| | L402 | | 00D 235 0125 905 | INDUCTOR(FLC32C220K)+3216 | | | |
| | L802 | | 00D 235 0125 905 | INDUCTOR(FLC32C220K)+3216 | | | |
| | W101 | | - | M3-SCREW-TERMINAL08R | | | |
| | W407 | | - | M3-SCREW-TERMINAL08R | | | |
| | W707 | | - | M3-SCREW-TERMINAL08R | | | |
| | W711,712 | | - | M3-SCREW-TERMINAL08R | | | |
| | W801,802 | | - | M3-SCREW-TERMINAL08R | | | |
| | X101 | | 00D 399 1017 002 | X-TAL(24.576MHZ) | | | |
| | X301 | | 00D 399 0951 004 | X'TAL(25MHZ) | | | |
| | | nsp | 0RD 471 3303 016 | 3X6 CBS-Z | | | |
| | | | - | 1P WIRE | | | |
| | | | - | 1P WIRE | W701-W705, W702-W706 | | |

## 00DGU-3752 DIGITAL VIDEO P.W.B. UNIT ASS'Y

| | Ref. No. | nsp | Part No. | Part Name | Remarks | Q'ty | New |
|---|---|---|---|---|---|---|---|
| **SEMICONDUCTORS GROUP** | | | | | | | |
| | IC101 | | 00D 262 3605 000 | sxT2LF-400(Realta) | | | |
| | IC103 | | 00D 262 2570 903 | TC7W241FU(TE12L) | | | |
| | IC701-704 | | 00D 262 3479 003 | EM6A9320BI-4MG | | | |
| | IC800 | | 00D 262 2977 933 | BA50BC0FP-E2 | | | |
| | IC802 | | 00D GEN 8134 | I/P ROM SUB ASSY | MX29LV640BBTC-90 | | * |
| | IC803 | | 00D 262 3473 902 | LP2995M | | | * |
| | IC806 | | 00D 262 3642 908 | LM1117MPX-1.8/NOPB | | | |
| | IC807 | | 00D 262 3364 011 | SII9030CTU-7 | | | |
| | IC809 | | 00D 262 1230 901 | TC7S04FTE85L +C | | | |
| | IC904 | | 00D 262 3493 908 | TC7MBL3245AFK | | | |
| | IC906 | | 00D 262 3493 908 | TC7MBL3245AFK | | | |
| | TR800 | | 00D 273 0460 905 | KTC2875B-RTK +C | | | |
| | TR803 | | 00D 275 0110 905 | HN1K02FU-TE85L | | | |
| | D800,801 | | 00D 276 0717 903 | 1SS355 TE-17 +C | | | |
| | D802 | | 00D 276 0750 902 | RB521S-30TE61 +REF | | | |
| | D804 | | 00D 276 0717 903 | 1SS355 TE-17 +C | | | |
| **RESISTORS GROUP** | | | | | | | |
| | R148-151 | | 00D 247 2020 933 | RM73B--103FT +1608 | | | |
| | R275 | | 00D 247 2019 928 | RM73B--750FT | | | |
| | R276 | | 00D 247 2021 932 | RM73B--331FT | | | |
| | R277 | | 00D 247 2021 945 | RM73B--162FT | | | |
| | R278 | | 00D 247 2019 928 | RM73B--750FT | | | |
| | R701-704 | | 00D 247 2020 933 | RM73B--103FT +1608 | | | |
| | R707-709 | | 00D 247 2020 933 | RM73B--103FT +1608 | | | |
| | R712 | | 00D 247 2020 933 | RM73B--103FT +1608 | | | |
| | R717 | | 00D 247 2021 932 | RM73B--331FT | | | |
| | R718 | | 00D 247 2019 928 | RM73B--750FT | | | |
| | R721 | | 00D 247 2019 928 | RM73B--750FT | | | |
| | R724 | | 00D 247 2021 932 | RM73B--331FT | | | |
| | R725,726 | | 00D 247 2019 928 | RM73B--750FT | | | |
| | R767,768 | | 00D 247 2021 945 | RM73B--162FT | | | |
| | R938 | | 00D 247 2025 938 | RM73B--391FT | | | |
| | R967-970 | | 00D 247 2025 909 | RM73B--821FT | | | |
| **CAPACITORS GROUP** | | | | | | | |
| | C101-118 | nsp | 00D 257 5009 974 | CK73F1C104ZT +1005 | | | |
| | C119 | | 00D 257 2015 929 | CS77B1A220MT | | | |
| | C120-127 | nsp | 00D 257 5009 974 | CK73F1C104ZT +1005 | | | |
| | C128 | | 00D 257 4011 905 | CE67C0J101MT (RV2) +REF | | | |
| | C129 | nsp | 00D 257 5009 974 | CK73F1C104ZT +1005 | | | |
| | C130,131 | nsp | 00D 257 5009 916 | CK73B1C103KT | | | |
| | C132-141 | nsp | 00D 257 5009 974 | CK73F1C104ZT +1005 | | | |
| | C142 | | 00D 257 2015 929 | CS77B1A220MT | | | |
| | C143-166 | nsp | 00D 257 5009 974 | CK73F1C104ZT +1005 | | | |
| | C167 | | 00D 257 4012 917 | CE67C1C220MT (RV2) +REF | | | |
| | C168-171 | | 00D 257 4012 904 | CE67C1C100MT (RV2B55 +REF | | | |
| | C172-177 | nsp | 00D 257 5009 974 | CK73F1C104ZT +1005 | | | |
| | C178,179 | | 00D 257 4011 905 | CE67C0J101MT (RV2) +REF | | | |
| | C180,181 | nsp | 00D 257 5009 916 | CK73B1C103KT | | | |

| | Ref. No. | nsp | Part No. | Part Name | Remarks | Q'ty | New |
|---|---|---|---|---|---|---|---|
| | C182 | nsp | 00D 257 5009 974 | CK73F1C104ZT +1005 | | | |
| | C183 | | 00D 257 4012 904 | CE67C1C100MT (RV2B55 +REF | | | |
| | C184,185 | nsp | 00D 257 5009 974 | CK73F1C104ZT +1005 | | | |
| | C188 | nsp | 00D 257 0506 951 | CC73CH1H101JT +1608 | | | |
| | C509 | | 00D 257 2015 916 | CS77B1A101MT | | | |
| | C510 | | 00D 257 2015 932 | CS77B1A470MT | | | |
| | C511 | | 00D 257 2015 929 | CS77B1A220MT | | | |
| | C701-709 | nsp | 00D 257 5009 974 | CK73F1C104ZT +1005 | | | |
| | C710 | | 00D 257 4012 917 | CE67C1C220MT (RV2) +REF | | | |
| | C711-719 | nsp | 00D 257 5009 974 | CK73F1C104ZT +1005 | | | |
| | C720 | | 00D 257 4012 917 | CE67C1C220MT (RV2) +REF | | | |
| | C721-729 | nsp | 00D 257 5009 974 | CK73F1C104ZT +1005 | | | |
| | C730 | | 00D 257 4012 917 | CE67C1C220MT (RV2) +REF | | | |
| | C731-739 | nsp | 00D 257 5009 974 | CK73F1C104ZT +1005 | | | |
| | C740 | | 00D 257 4012 917 | CE67C1C220MT (RV2) +REF | | | |
| | C741-748 | nsp | 00D 257 5009 916 | CK73B1C103KT | | | |
| | C749-758 | nsp | 00D 257 5009 974 | CK73F1C104ZT +1005 | | | |
| | C759 | | 00D 257 2015 916 | CS77B1A101MT | | | |
| | C760 | | 00D 257 2015 929 | CS77B1A220MT | | | |
| | C801 | | 00D 257 4012 904 | CE67C1C100MT (RV2B55 +REF | | | |
| | C802 | nsp | 00D 257 5009 974 | CK73F1C104ZT +1005 | | | |
| | C804 | nsp | 00D 257 5009 974 | CK73F1C104ZT +1005 | | | |
| | C805,806 | nsp | 00D 257 5009 916 | CK73B1C103KT | | | |
| | C807 | nsp | 00D 257 5009 974 | CK73F1C104ZT +1005 | | | |
| | C808 | | 00D 257 2015 932 | CS77B1A470MT | | | |
| | C809 | | 00D 257 4011 905 | CE67C0J101MT (RV2) +REF | | | |
| | C810 | | 00D 257 2015 932 | CS77B1A470MT | | | |
| | C811 | | 00D 257 4011 905 | CE67C0J101MT (RV2) +REF | | | |
| | C812-846 | nsp | 00D 257 5009 916 | CK73B1C103KT | | | |
| | C900,901 | nsp | 00D 257 5009 974 | CK73F1C104ZT +1005 | | | |
| | C903 | nsp | 00D 257 5009 974 | CK73F1C104ZT +1005 | | | |
| | C905-909 | nsp | 00D 257 5009 974 | CK73F1C104ZT +1005 | | | |
| | C910 | nsp | 00D 257 5006 993 | CK73B1H102KT +1005 | | | |
| | C911,912 | nsp | 00D 257 5009 974 | CK73F1C104ZT +1005 | | | |
| | C913,914 | nsp | 00D 257 5006 993 | CK73B1H102KT +1005 | | | |
| | C915 | nsp | 00D 257 5009 974 | CK73F1C104ZT +1005 | | | |
| | C916 | nsp | 00D 257 5006 993 | CK73B1H102KT +1005 | | | |
| | C917 | nsp | 00D 257 5009 974 | CK73F1C104ZT +1005 | | | |
| | C918-921 | nsp | 00D 257 5006 993 | CK73B1H102KT +1005 | | | |
| | C922,923 | nsp | 00D 257 5009 974 | CK73F1C104ZT +1005 | | | |
| | C924-926 | nsp | 00D 257 5006 993 | CK73B1H102KT +1005 | | | |
| | C935-938 | nsp | 00D 257 0516 954 | CK73B1E104KT +1608 | | | |
| | C946,947 | nsp | 00D 257 5009 974 | CK73F1C104ZT +1005 | | | |
| | C970,971 | | 00D 257 4012 920 | CE67C1C470MT (RV2) +REF | | | |
| | C972 | | 00D 257 2015 929 | CS77B1A220MT | | | |
| | C973,974 | | 00D 254 4655 922 | CE67C0J470MT (RV2) +REF | | | |
| | C975,976 | | 00D 254 4655 906 | CE67C0J220MT (RV2) +REF | | | |
| | C977 | | 00D 254 4655 922 | CE67C0J470MT (RV2) +REF | | | |
| | C978-982 | | 00D 257 4012 904 | CE67C1C100MT (RV2B55 +REF | | | |
| | C983 | nsp | 00D 257 5009 974 | CK73F1C104ZT +1005 | | | |
| | C984-993 | nsp | 00D 257 5003 983 | CC73CH1H470JT | | | |
| **OTHERS PARTS GROUP** | | | | | | | |
| | CX123 | nsp | 00D 205 1324 021 | 12P PIN HEADER(9120) | | | |
| | CX162 | nsp | 00D 205 1324 063 | 16P PIN HEADER(9120) | | | |
| | CX811 | nsp | 00D 205 1394 006 | 19P HDMI CONNECTOR | | | |

| | Ref. No. | nsp | Part No. | Part Name | Remarks | Q'ty | New |
|---|---|---|---|---|---|---|---|
| | CY064 | nsp | 00D 205 0449 062 | 6P VH CONNECTOR BASE | | | |
| | CY122 | nsp | 00D 205 1386 085 | 12P BASE(9115B-PT1) | | | |
| | CY125 | nsp | 00D 205 1386 085 | 12P BASE(9115B-PT1) | | | |
| | CY131 | nsp | 00D 205 0892 088 | 13P FFC CON. BASE | | | |
| | CY161 | nsp | 00D 205 1324 063 | 16P PIN HEADER(9120) | | | |
| | FB101-105 | | 00D 235 0136 907 | FBMJ1608HS280NT +1608 | | | |
| | FB800-806 | nsp | 00D 247 2018 903 | RM73B--0R0KT +1608 | | | |
| | FB807 | nsp | 00D 247 2003 989 | RM73B--330JT +1608 | | | |
| | L800 | | 00D 235 0125 905 | INDUCTOR(FLC32C220K)+3216 | | | |
| | L805,806 | | 00D 235 0125 905 | INDUCTOR(FLC32C220K)+3216 | | | |
| | W701,702 | | - | M3 SCREW TERMINAL | | | |
| | W704 | | - | M3 SCREW TERMINAL | | | |
| | W800,801 | | - | M3-SCREW-TERMINAL08R | | | |
| | X101 | | 00D 399 0987 900 | FCXO-05(66.666MHz) | | | |

## 00DGU-3793 FAN POWER P.W.B. UNIT ASS'Y

| | Ref. No. | nsp | Part No. | Part Name | Remarks | Q'ty | New |
|---|---|---|---|---|---|---|---|
| **SEMICONDUCTORS GROUP** | | | | | | | |
| | IC801 | | 00D 263 1100 050 | KIA7808API | | | |
| | D801 | | 00D 276 0401 905 | 1SS133T77 (TAPE) | | | |
| | | | | | | | |
| **CAPACITORS GROUP** | | | | | | | |
| | C801 | nsp | 00D 257 0514 901 | CK73F1C334ZT +1608 | | | |
| | C802 | nsp | 00D 257 0512 903 | CK73F1E104ZT +1608 | | | |
| | C803 | nsp | 00D 254 4538 900 | CE04W1C100MT SMG/RE3 | | | |
| | | | | | | | |
| **OTHERS PARTS GROUP** | | | | | | | |
| | CY038 | nsp | 00D 205 0343 032 | 3P CONN.BASE(KR-PH) | | | |

## EXPLODED VIEW

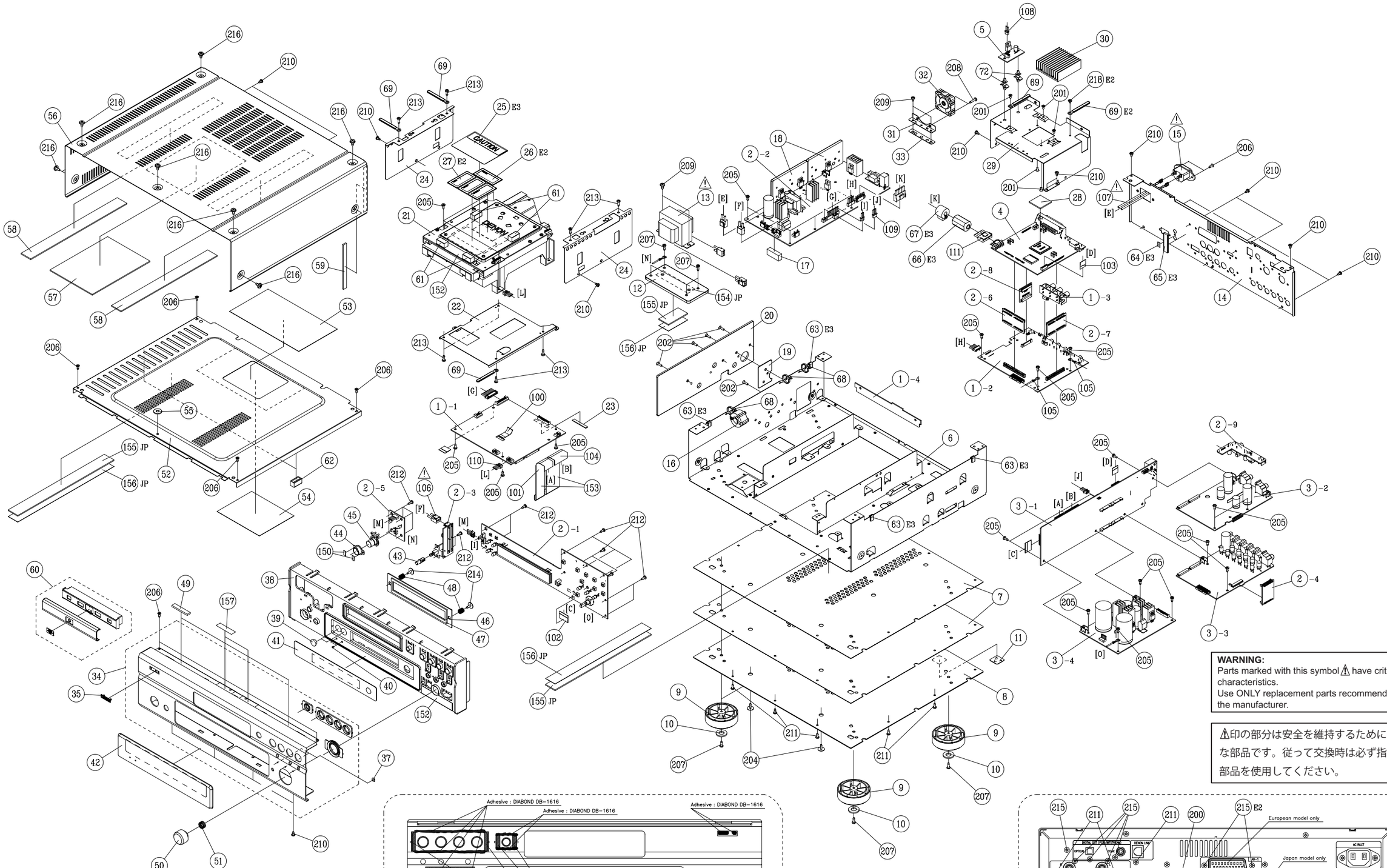


**WARNING:**
Parts marked with this symbol ⚠ have critical characteristics.
Use ONLY replacement parts recommended by the manufacturer.

⚠印の部分は安全を維持するために重要な部品です。従って交換時は必ず指定の部品を使用してください。

# PARTS LIST OF EXPLODED VIEW

＊本表に記載されている部品は、補修用部品のため製品に使用している部品とは一部、形状、寸法などが異なる場合があります。
＊ The parts listed below are for maintenance only, might differ from the parts used in the unit in appearances or dimensions.

＊ "nsp" 印の部品は常時在庫していませんので供給に長時間を要することがあります。場合によっては、供給をお断りする場合があります。
＊ Part indicated with the mark “nsp” are not always in stock and possibly to take a long period of time for supplying, or in some case supplying of part may be refused.

**Note:** The symbols in the column "Remarks" indicate the following destinations.
E3: U.S.A. & Canada model(DVD-3930CI) E2: Europe model JP: Japan model

| | Ref. No. | nsp | Part No. | Part Name | Remarks | Q'ty | New |
|---|---|---|---|---|---|---|---|
| | 1 | | 00DGU-3749 | MAIN/A.VIDEO UNIT(3930E3) | E3 Model | 1 | * |
| | 1 | | 00DGU-3749A | MAIN/A.VIDEO UNIT(3930E2) | E2 Model | 1 | * |
| | 1 | | 00DGU-3749B | MAIN/A.VIDEO UNIT(3930JP) | JP Model | 1 | * |
| | 1-1 | | | MAIN UNIT | | | |
| | 1-2 | | | VIDEO UNIT | | | |
| | 1-3 | | | VIDEO(BNC) OUT UNIT | | | |
| | 1-4 | | | M.SUPPORT UNIT | | | |
| | 2 | | - | POWER/DISPLAY UNIT(2930E3) | E3 Model (00DGU-3750) | 1 | * |
| | 2 | | - | POWER/DISPLAY UNIT(2930E2) | E2 Model (00DGU-3750A) | 1 | * |
| | 2 | | - | POWER/DISPLAY UNIT(2930JP) | JP Model (00DGU-3750B) | 1 | * |
| | 2-1 | | | DISPLAY UNIT | | | |
| | 2-2 | | | D.POWER UNIT | | | |
| | 2-3 | | | P.SW UNIT | | | |
| | 2-4 | | | A.CONNECT UNIT | | | |
| | 2-5 | | | 2nd SW UNIT | | | |
| | 2-6 | | | V.CONNECT UNIT-1 | | | |
| | 2-7 | | | V.CONNECT UNIT-2 | | | |
| | 2-8 | | | V.CONNECT UNIT-3 | | | |
| | 2-9 | | | DIGITAL OUT UNIT | | | |
| | 3 | | 00DGU-3751 | AUDIO UNIT(2930E3) | E3 Model | 1 | * |
| | 3 | | 00DGU-3751A | AUDIO UNIT(2930E2) | E2 Model | 1 | * |
| | 3 | | 00DGU-3751B | AUDIO UNIT(2930JP) | JP Model | 1 | * |
| | 3-1 | | | AUDIO (DIGITAL) UNIT | | | |
| | 3-2 | | | AUDIO (2ch) UNIT | | | |
| | 3-3 | | | AUDIO (5.1ch) UNIT | | | |
| | 3-4 | | | AUDIO (POWER) UNIT | | | |
| | 4 | | 00DGU-3752 | D.VIDEO UNIT(2930E3/JP) | E3,JP Model | 1 | * |
| | 4 | | 00DGU-3752A | D.VIDEO UNIT(2930E2) | E2 Model | 1 | * |
| | 5 | | - | FAN POWER UNIT | (00DGU-3793) | 1 | * |
| | 6 | nsp | 00D 411 2095 307 | CHASSIS(3930) | | 1 | * |
| | 7 | nsp | 00D 105 1382 051 | INSIDE PLATE(T0.8) | | 2 | |
| | 8 | nsp | 00D 105 1382 022 | INSIDE PLATE | | 1 | |
| | 9 | nsp | 00D 104 0334 007 | FOOT | | 4 | |
| | 10 | nsp | 00D 461 1050 005 | RUBBER PAD | | 4 | |
| | 11 | nsp | 00D 513 8266 009 | DANGEROUS MARK | | 1 | |
| | 12 | nsp | 00D 412 5303 002 | TRANS BASE | | 1 | * |
| ⚠ | 13 | | 00D 233 6568 007 | POWER TRANS(3930E3) | E3 Model | 1 | * |
| ⚠ | 13 | | 00D 233 6569 006 | POWER TRANS(3930E2) | E2 Model | 1 | * |
| ⚠ | 13 | | 00D 233 0720 003 | POWER TRANS(3930JP) | JP Model | 1 | * |
| | 14 | nsp | 00D 105 1662 302 | REAR PANEL(3930E3) | E3 Model | 1 | * |
| | 14 | nsp | 00D 105 1662 315 | REAR PANEL(3930E2) | E2 Model | 1 | * |
| | 14 | nsp | 00D 105 1662 328 | REAR PANEL(3930JP) | JP Model | 1 | * |
| ⚠ | 15 | | 00D 203 3995 009 | AC INLET (2P) | | 1 | |
| | 16 | nsp | 00D 342 0041 002 | FERRITE CORE(F5BUFR-25-12-15) | | 1 | |
| | 17 | nsp | 00D 461 1248 037 | RUBBER SHEET | | 1 | |
| | 18 | nsp | 00D 417 0651 204 | HEAT PLATE | | 2 | |
| | 19 | nsp | 00D 417 0700 003 | HEAT PLATE(3930/CU) | | 1 | * |
| | 20 | nsp | 00D 417 0701 002 | HEAT PLATE(3930/AL) | | 1 | * |
| | 21 | | FG180-3-DE | DVD MECHA UNIT(S65) | | 1 | * |

| | Ref. No. | nsp | Part No. | Part Name | Remarks | Q'ty | New |
|---|---|---|---|---|---|---|---|
| | 22 | nsp | 00D 412 5304 001 | MAIN PWB BRACKET(3930) | | 1 | * |
| | 23 | nsp | 00D 461 1248 024 | RUBBER SHEET | | 1 | |
| | 24 | nsp | 00D 412 5342 005 | MECHA SIDE COVER | | 2 | * |
| | 25 | nsp | 00D 513 3406 107 | LABEL(A) | E3 Model | 1 | |
| | 26 | nsp | 00D 513 3463 001 | LABEL(LASER) | E2 Model | 1 | |
| | 27 | nsp | 00D 513 2063 004 | E2 LASER CAUTION | E2 Model | 1 | |
| | 28 | | - | HEAT SHEET (GP1-2.0) | | 1 | * |
| | 29 | nsp | 00D 411 2096 209 | SUPPORT BRACKET(3930) | | 1 | |
| | 30 | nsp | 00D 417 0677 000 | HEAT SINK(PUG56) | | 1 | |
| | 31 | nsp | 00D 412 5341 006 | FAN BRACKET(3930) | | 1 | |
| | 32 | | 00D 421 0839 009 | FAN F410T-12L1C | | 1 | |
| | 33 | nsp | 00D 461 1273 002 | RUBBER SPACER | | 1 | |
| | 34 | | 00D 9KA 2A74 3 | FRONT PANEL ASS'Y(3930CIBK) | Black E3 Model | 1 | * |
| | 34 | | 00D 9KA 2A74 4 | FRONT PANEL ASS'Y(3930SR) | Silver Model | 1 | * |
| | 34 | | 00D 9KA 2A74 5 | FRONT PANEL ASS'Y(3930SP) | P.Silver Model | 1 | * |
| | 34 | | 00D 9KA 2A74 6 | FRONT PANEL ASS'Y(3930BK) | Black E2 Model | 1 | * |
| | 35 | | 00D 131 0158 007 | DENON BADGE | Black Model | 1 | |
| | 35 | | 00D 131 0158 010 | DENON BADGE | P.Silver Model | 1 | |
| | 35 | | 00D 131 0158 023 | DENON BADGE | Silver Model | 1 | |
| | 37 | | 00D 143 1232 006 | LENS | | 3 | |
| | 38 | | 00D 146 2360 303 | INNER PANEL(3910/3930BK) | Black Model | 1 | * |
| | 38 | | 00D 146 2360 329 | INNER PANEL(3910/3930SR) | Silver Model | 1 | * |
| | 38 | | 00D 146 2360 345 | INNER PANEL(3930SP) | P.Silver Model | 1 | * |
| | 39 | | 00D 143 1207 002 | LENS | | 2 | |
| | 40 | | 00D 143 1208 001 | LENS(MINI) | | 2 | |
| | 41 | | 00D 143 1248 003 | DISPLAY SHEET(3930) | | 1 | |
| | 42 | | 00D 143 1249 109 | WINDOW(3930BK) | Black & P.Silver(JP)Model | 1 | |
| | 42 | | 00D 143 1249 112 | WINDOW(3930SR) | Silver Model | 1 | |
| | 42 | | 00D 143 1249 125 | WINDOW(3930SP-EX) | P.Silver(E2) Model | 1 | |
| | 43 | | 00D 113 1994 107 | P.KNOB ASSY(MAIN) | 00DGEN8140, Black Model | 1 | |
| | 43 | | 00D 113 1994 110 | P.KNOB ASSY(MAIN) | 00DGEN8140-1, Silver Model | 1 | |
| | 43 | | 00D 113 1994 149 | P.KNOB ASSY(MAIN) | 00DGEN8140-2, P.Silver Model | 1 | |
| | 44 | | 00D 143 1189 007 | POWER LENS | 00D1431250004 | 1 | |
| | 45 | | 00D 113 1992 109 | P.KNOB ASSY(SUB) | 00DGEN8141, Black Model | 1 | |
| | 45 | | 00D 113 1992 112 | P.KNOB ASSY(SUB) | 00DGEN8141-1, Silver Model | 1 | |
| | 45 | | 00D 113 1992 138 | P.KNOB ASSY(SUB) | 00DGEN8141-2, P.Silver Model | 1 | |
| | 46 | nsp | 00D 461 1162 003 | BLIND SHEET | | 1 | |
| | 47 | nsp | 00D 431 0440 000 | BLIND | | 1 | |
| | 48 | nsp | 00D 463 0958 007 | SPRING | | 2 | |
| | 49 | nsp | 00D 129 0253 048 | RUBBER SHEET | E3 Model | 1 | |
| | 50 | | 00D GEN 8142 | S.KNOB SUB ASSY(3930BK) | Black Model | 1 | * |
| | 50 | | 00D GEN 8142 -1 | S.KNOB SUB ASSY(3930SR) | Silver Model | 1 | * |
| | 50 | | 00D GEN 8142 -2 | S.KNOB SUB ASSY(3930SP) | P.Silver Model | 1 | * |
| | 51 | nsp | 00D 463 0974 007 | SPRING | | 1 | * |
| | 52 | nsp | 00D 102 0693 205 | INNER COVER(2930&3930) | | 1 | |
| | 53 | nsp | 00D 461 1270 034 | RUBBER(FOAM) SHEET | | 1 | |
| | 54 | nsp | 00D 461 1274 001 | PVC SHEET | | 1 | |
| | 55 | nsp | 00D 462 0181 004 | RUBBER WASHER | | 1 | |
| | 56 | | 00D 102 0670 231 | TOP COVER(3930BK) | Black Model | 1 | * |
| | 56 | | 00D 102 0670 244 | TOP COVER(3930SR) | Silver & P.Silver(E2) Model | 1 | * |
| | 56 | | 00D 102 0670 257 | TOP COVER(3930SR_KT) | P.Silver(JP) Model | 1 | * |
| | 57 | nsp | 00D 461 1248 066 | RUBBER SHEET | 150x110xt0.5 | 1 | * |
| | 58 | nsp | 00D 461 1248 079 | RUBBER SHEET | 125x25xt0.5 | 2 | * |
| | 59 | nsp | 00D 461 1276 009 | RUBBER SHEET | | 1 | * |
| | 60 | | 00D GEN 8143 | L/P SUB ASSY(3930BK) | Black Model | 1 | * |
| | 60 | | 00D GEN 8143 -1 | L/P SUB ASSY(3930SR) | Silver Model | 1 | * |

| | Ref. No. | nsp | Part No. | Part Name | Remarks | Q'ty | New |
|---|---|---|---|---|---|---|---|
| | 60 | | 00D GEN 8143 -2 | L/P SUB ASSY(3930SP) | P.Silver Model | 1 | * |
| | 61 | | - | EMIGASKET RFSG100100 | 30mmx4 | 4 | |
| | 62 | | - | EMIGASKET RFSG100100 | 20mmx2 | 2 | |
| | 63 | | - | EMIGASKET RFSG020070 | 20mmx4 | 4 | |
| | 64 | | - | EMIGASKET RFSG003050 | 10mmx1 | 1 | |
| | 65 | | - | EMIGASKET RFSG030100 | 40mmx1 | 1 | |
| | 66 | nsp | 00D 342 0032 008 | FERRITE CLAMP(RFC-6) | | 1 | |
| | 67 | nsp | 00D 342 0042 001 | FERRITE CLAMP(TFC16813) | | 1 | * |
| | 68 | | - | WIRE CLAMP BAND | | 10 | |
| | 69 | | - | CORD HOLDER (L50) | E3,JP Model | 4 | |
| | 69 | | - | CORD HOLDER (L50) | E2 Model | 5 | |
| | ★ 70 | nsp | 00D 513 3827 074 | FUSE LABEL | E2 Model(F-901), for RATING | 1 | |
| | ★ 71 | nsp | 00D 513 3827 087 | FUSE LABEL | E2 Model(F-901), for CAUTION | 2 | |
| | 72 | nsp | 00D 449 0210 024 | PWB SPACER(LCBS-10) | | 2 | |
| | | | | | | | |
| **Wires** | | | | | | | |
| | 100 | | 00D 009 0276 019 | 24P FFC(0.5) L90 | CX241 | 1 | * |
| | 101 | | 00D 009 0277 021 | 21P FFC(1.0) | CX221-CY221 | 1 | * |
| | 102 | | 00D 009 0278 017 | 21P FFC(1.0)SOLDER | CX222-CY222 | 1 | * |
| | 103 | | 00D 009 0286 009 | 13P FFC(1.0) | CX131-CY131 | 1 | * |
| | 104 | | 00D 009 0286 012 | 33P FFC(1.0) | CX331-CY331 | 1 | * |
| | 105 | | - | 1P LUG WIRE | | 2 | * |
| ⚠ | 106 | nsp | 00D 203 5294 038 | 3P VH-VH CON.CORD | CX025-CY025 | 1 | * |
| ⚠ | 107 | nsp | 00D 203 5344 043 | 3P VH CON.CORD | CX024 | 1 | * |
| | 108 | | - | 3P PH CORD | CY038 | 1 | * |
| | 109 | | - | 4P PH-PH CON.CORD | CX044-CY044 | 1 | * |
| | 110 | | - | 5P PH-PH CON.CORD | CY05 | 1 | * |
| | 111 | | - | 6P VH-VH CON.CORD | CX064-CY064 | 1 | * |
| | | | | | | | |
| **Tapes** | | | | | | | |
| | 150 | | - | DOUBLE-FACED ADHESIVE TAPE | W5x10 | 2 | |
| | 150 | | - | DOUBLE-FACED ADHESIVE TAPE | W5x15 | 2 | |
| | 150 | | - | DOUBLE-FACED ADHESIVE TAPE | W5x25 | 2 | |
| | 150 | | - | DOUBLE-FACED ADHESIVE TAPE | W5x20 | 2 | |
| | 150 | | - | DOUBLE-FACED ADHESIVE TAPE | W5x60 | 1 | |
| | 151 | | - | ACETATE CLOTH TAPE | W10 | 2 | |
| | 152 | | - | ALUMINUM TAPE | W30x90 | 1 | |
| | 153 | | - | ALUMINUM TAPE(W=60) | W60x100 | 2 | |
| | 154 | | - | CHUKOH TAPE | W25x80 | 1 | |
| | 155 | | - | BUTYL TAPE(W25 T2) | W25x50, JP Model | 1 | |
| | 155 | | - | BUTYL TAPE(W25 T2) | W25x250, JP Model | 2 | |
| | 156 | | - | NITOFLON TAPE(W25) | W25x50, JP Model | 1 | |
| | 156 | | - | NITOFLON TAPE(W25) | W25x250, JP Model | 2 | |
| | 157 | | - | ALUMINUM TAPE | W30x40 | 2 | |
| | | | | | | | |
| | | | | | | | |
| | | | | | | | |

| | Ref. No. | nsp | Part No. | Part Name | Remarks | Q'ty | New |
|---|---|---|---|---|---|---|---|
| **Screws** | | | | | | | |
| | 200 | nsp | 00D 473 7034 002 | 3X6 CPTS(S)-NI | | 1 | |
| | 201 | nsp | 0RD 471 2303 020 | 3X6 CFS-B | | 5 | |
| | 202 | nsp | 0RD 471 2305 015 | 3X10 CFS | | 7 | |
| | 203 | nsp | 0RD 471 3304 015 | 3X8 CBS-Z | | 3 | |
| | 204 | nsp | 0RD 471 8010 100 | SPECIAL SCREW | | 2 | |
| | 205 | nsp | 0RD 473 7002 018 | 3X8 CBTS (S)-Z | | 27 | |
| | 206 | nsp | 0RD 473 7003 017 | 3X8 CFTS (S)-B | | 8 | |
| | 207 | nsp | 0RD 473 7005 002 | 3X10 CBTS (S)-Z | | 8 | |
| | 208 | nsp | 0RD 473 7005 028 | 3X14 CBTS(S)Z | | 2 | |
| | 209 | nsp | 0RD 473 7007 000 | 4X8 CBTS (S)-B | | 2 | |
| | 210 | nsp | 0RD 473 7015 005 | 3X6 CBTS(S)-B | | 30 | |
| | 211 | nsp | 0RD 473 7015 018 | 3X8 CBTS (S)-B | | 11 | |
| | 212 | nsp | 0RD 473 7500 044 | 3X8 CBTS (P)-B | | 17 | |
| | 213 | nsp | 0RD 473 7508 017 | 3X10 CBTS (P)-B | | 4 | |
| | 214 | nsp | 0RD 473 8044 004 | SPECIAL SCREW | | 2 | |
| | 215 | nsp | 0RD 477 0064 123 | FIXING SCREW | E3 Model | 15 | |
| | 215 | nsp | 0RD 477 0064 123 | FIXING SCREW | E2 Model | 17 | |
| | 215 | nsp | 0RD 477 0064 123 | FIXING SCREW | JP Model | 16 | |
| | 216 | nsp | 0RD 477 0263 005 | 3P. SWELLING SCREW | Black Model | 9 | |
| | 216 | nsp | 0RD 477 0263 018 | 3P.SWELLING SCREW | Silver & P.Silver Model | 9 | |
| | 217 | | - | HEX BO LT | for RC232C | 2 | |
| | 218 | nsp | 0RD 473 7005 086 | 3X4 CBTS (S)-Z | E2 Model | 1 | |

# EXPLODED VIEW OF DVD MECHANISM UNIT

**WARNING:**
Parts marked with this symbol ⚠ have critical characteristics.
Use ONLY replacement parts recommended by the manufacturer.

⚠印の部分は安全を維持するために重要な部品です。従って交換時は必ず指定の部品を使用してください。

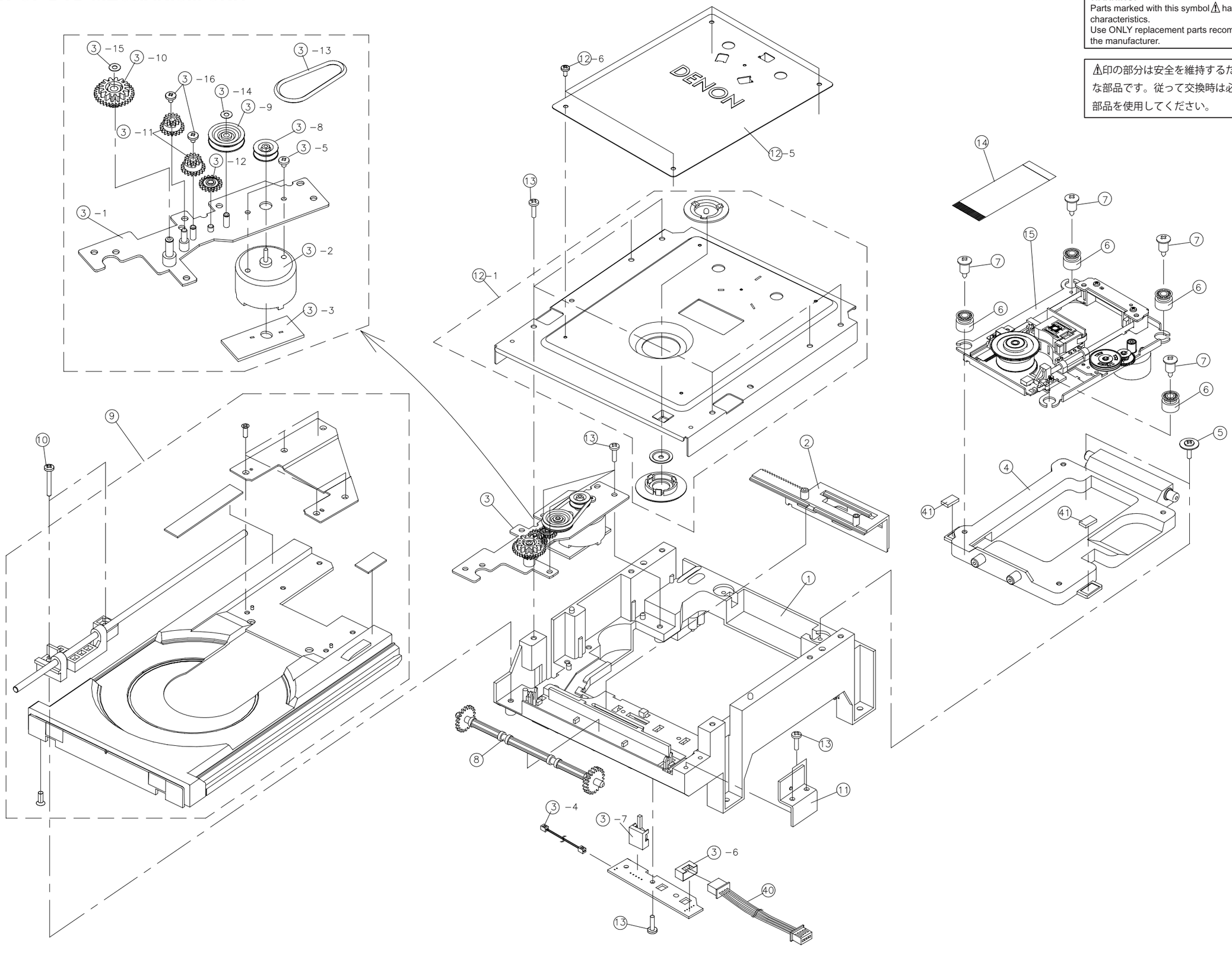

# PARTS LIST OF DVD MECHANISM UNIT (FG180-3)

＊本表に記載されている部品は、補修用部品のため製品に使用している部品とは一部、形状、寸法などが異なる場合があります。
＊ The parts listed below are for maintenance only, might differ from the parts used in the unit in appearances or dimensions.

＊ "nsp" 印の部品は常時在庫していませんので供給に長時間を要することがあります。場合によっては、供給をお断りする場合があります。
＊ Part indicated with the mark “nsp” are not always in stock and possibly to take a long period of time for supplying, or in some case supplying of part may be refused.

| | Ref. No. | nsp | Part No. | Part Name | Remarks | | Q'ty | New |
|---|---|---|---|---|---|---|---|---|
| | 1 | nsp | 00D 9KA 2G55 5 | MECHA CHASSIS | | | 1 | * |
| | 2 | | 00D 9KA 2G56 2 | PLATE GEAR | | | 1 | |
| | 3 | | 00D 9KA 2A40 3 | GEAR BASE SUB ASS'Y | | | 1 | |
| | 3-1 | nsp | 00D 9KA 2A40 1 | GEAR BASE ASS'Y | | | 1 | |
| | 3-2 | | 00D 9KM 01T1 32 | MT RF500TB14415 | | | 1 | |
| | 3-3 | | - | MOTOR PCB FG70 | | D9P139 | 1 | |
| | 3-4 | nsp | 00D 9KA 2G92 1 | CNW2 FG70 | | | 1 | |
| | 3-5 | nsp | 00D 9KB DZ25 W3 | M2.6x2.5 BIND-CR3 | | | 2 | |
| | 3-6 | nsp | 00D 9KE CEL0 77 | S5B-PH RED(LF)(SN) | | | 1 | |
| | 3-7 | | 00D 9KS 01W1 48 | OP/CL SW SSS-12 | | | 1 | |
| | 3-8 | | 00D 9KA 2G55 9 | MOTOR PULLEY | | | 1 | |
| | 3-9 | | 00D 9KA 2G56 0 | PULLEY GEAR | | | 1 | |
| | 3-10 | | 00D 9KA 2G55 6 | GEAR A | | | 1 | |
| | 3-11 | | 00D 9KA 2G55 7 | GEAR B | | | 2 | |
| | 3-12 | | 00D 9KA 2G55 8 | GEAR C | | | 1 | |
| | 3-13 | | 00D 9KA 2G56 3 | BELT | | | 1 | |
| | 3-14 | nsp | 00D 9KP 26C6 25 | PSW2.6x6x0.25C | | | 1 | |
| | 3-15 | nsp | 00D 9KP 36C6 25 | PSW3.6x6x0.25C | | | 1 | |
| | 3-16 | nsp | 00D 9KA 2H06 6 | SPECIAL SCREW M1.7-(W)CR3 | | | 2 | |
| | 4 | nsp | 00D 9KA 2G56 1 | MECHA FRAME | | | 1 | * |
| | 5 | nsp | 00D 9KA 2H08 8 | M3x10 SPECAIL SCREW-CR3 | | | 2 | |
| | 6 | | 00D 9KC 2G08 3 | DAMPER-IDLE | | | 4 | |
| | 7 | | 00D 9KC 1H01 2 | SCR-DAMPER-CR3 | | | 4 | |
| | 8 | | 00D 9KA 4G01 3 | LOADER GEAR | | | 1 | |
| | 9 | | 00D 9KA 2A40 4 | LOADER SUB ASS'Y | | | 1 | * |
| | 10 | nsp | 00D 9KB EP16 K3 | M3x16 BIND P-TIGHT-BLACK-CR3 | | | 2 | |
| | 11 | | 00D 9KA 2A40 2 | BEARING BKT ASS'Y | | | 1 | |
| | 12-1 | nsp | 00D 9KA 2A73 9 | CLAMP BASE ASS'Y | | | 1 | * |
| | 12-5 | nsp | 00D 9KM 0K05 9 | CLAMP BASE DAMPER-LOGO | | | 1 | |
| | 12-6 | nsp | 00D 9KB DZ04 K3 | M2.6x4 BIND BLACK-CR3 | | | 4 | |
| | 13 | nsp | 00D 9KA 2H08 9 | M3x10 BIND P-TIGHT(B)CR3 | | | 12 | |
| | 14 | | 00D 009 0276 019 | 24P FFC(0.5)L90 | | | 1 | |
| | 15 | | 00D 9KA 2A69 2 | TRAVERSE MECHA ASS'Y | | | 1 | * |
| | 40 | nsp | 00D 9KA 2G95 0 | 5P PH-PH CONN.CORD | | | 1 | |
| | 41 | nsp | 00D 9KD 9P13 8 | PORON-SHEET(EL-20) | | | 2 | |

## POINTS OF GREASING (1/2)

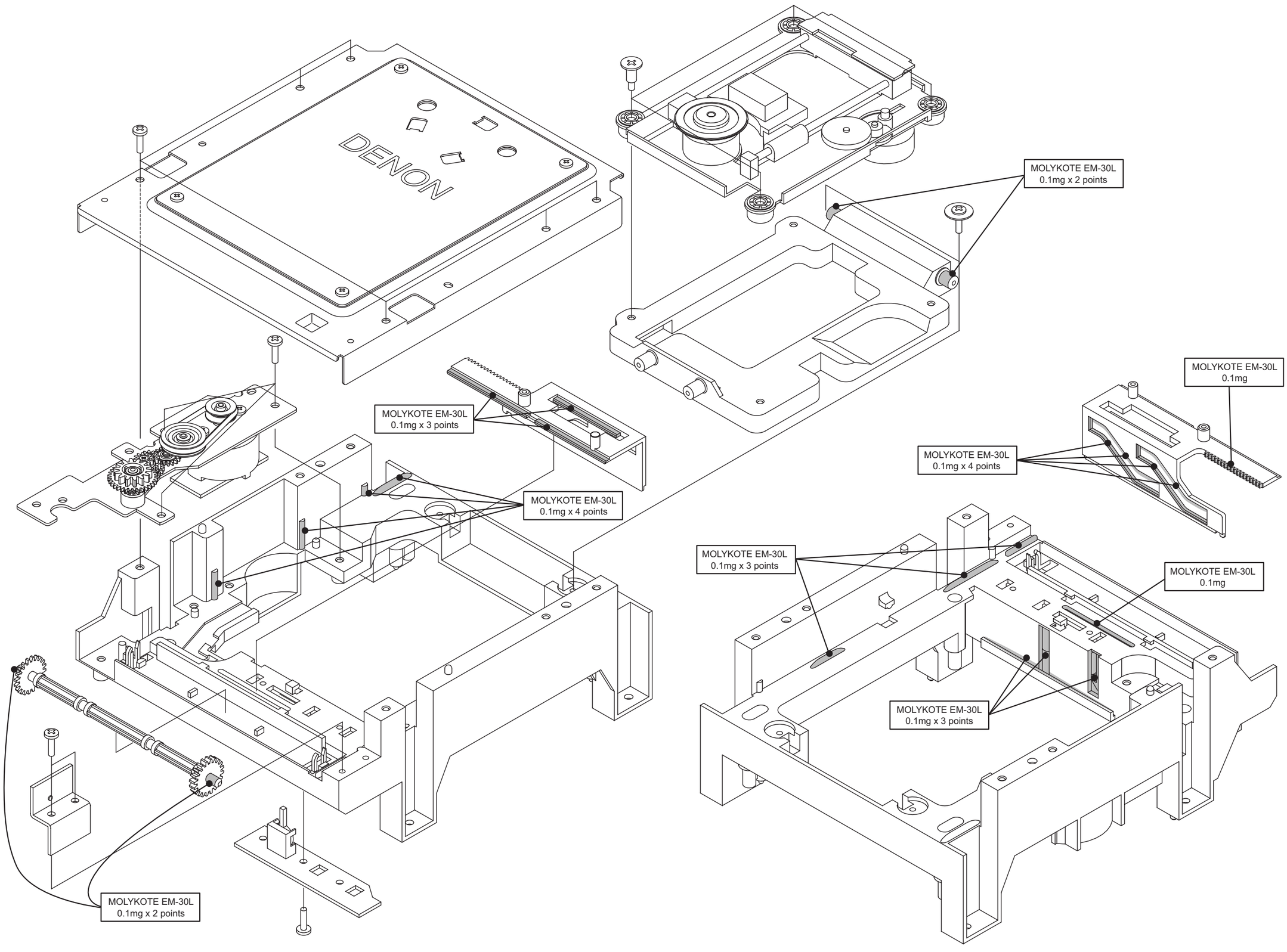

## POINTS OF GREASING (2/2)

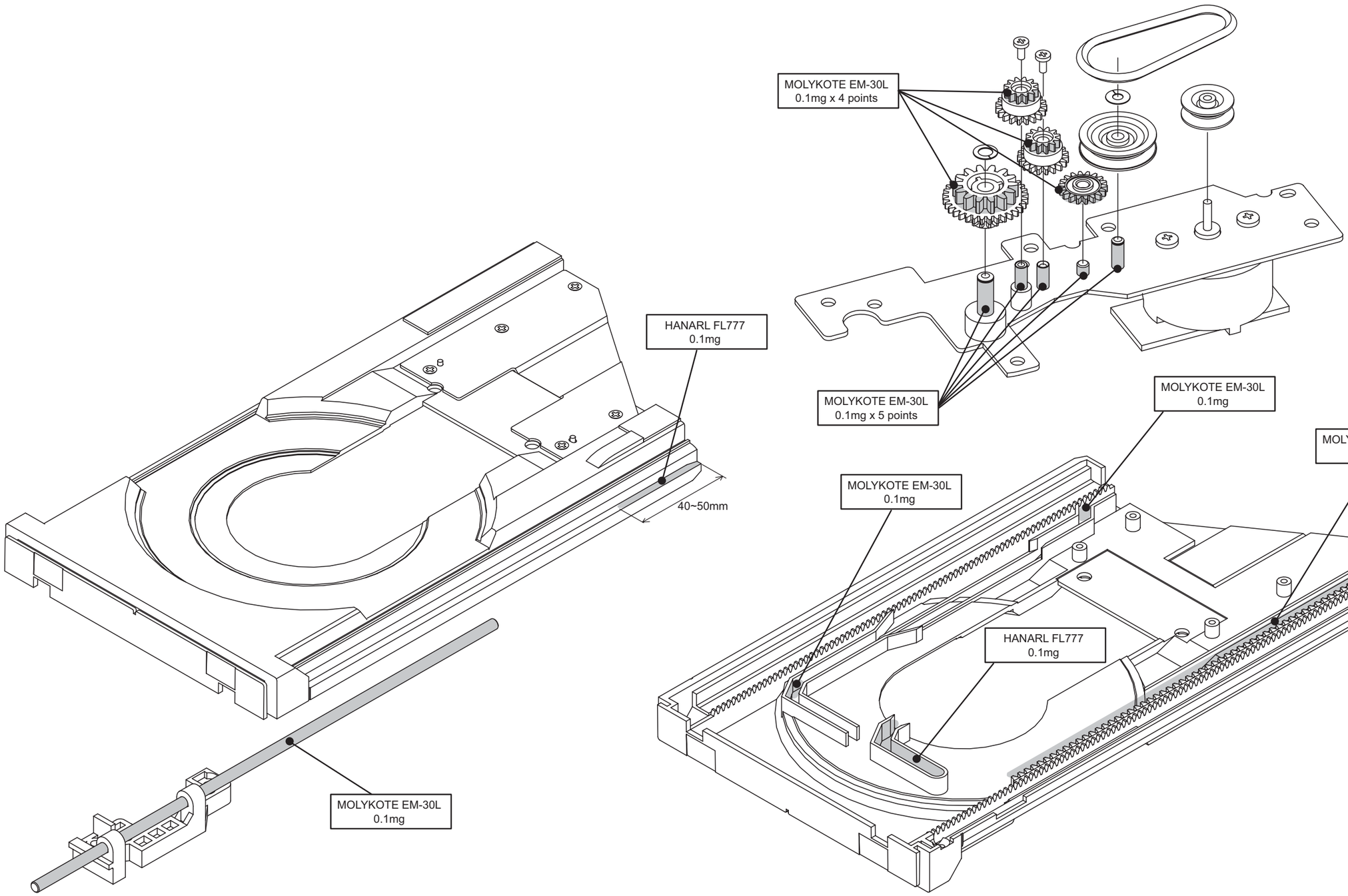

## PACKING VIEW

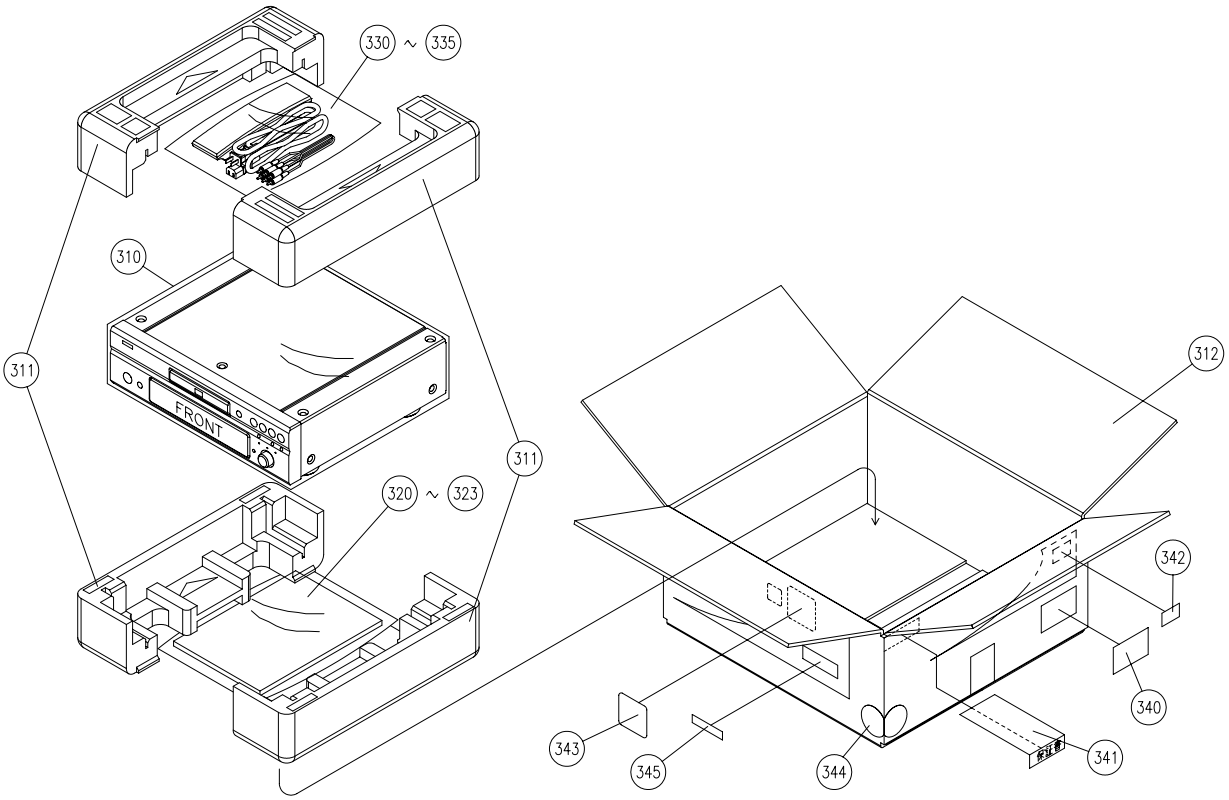


## PARTS LIST OF PACKING & ACCESSORIES

＊本表に記載されている部品は、補修用部品のため製品に使用している部品とは一部、形状、寸法などが異なる場合があります。
＊ The parts listed below are for maintenance only, might differ from the parts used in the unit in appearances or dimensions.

＊ "nsp" 印の部品は常時在庫していませんので供給に長時間を要することがあります。場合によっては、供給をお断りする場合があります。
＊ Part indicated with the mark “nsp” are not always in stock and possibly to take a long period of time for supplying, or in some case supplying of part may be refused.

**Note:** The symbols in the column "Remarks" indicate the following destinations.
E3 : U.S.A. & Canada model (DVD-3930CI) E2 : Europe model JP : Japan model

| | Ref. No. | nsp | Part No. | Part Name | Remarks | Q'ty | New |
|---|---|---|---|---|---|---|---|
| | 310 | nsp | 00D 505 0131 076 | CABINET COVER | | 1 | |
| | 311 | nsp | 00D 503 1525 009 | CUSHION(DVD3930) | | 2 | * |
| | 312 | nsp | 00D 501 2330 022 | CARTON CASE(3930E3) | E3 Model | 1 | * |
| | 312 | nsp | 00D 501 2330 035 | CARTON CASE(3930EX) | E2 Model | 1 | * |
| | 312 | nsp | 00D 501 2330 051 | CARTON CASE(3930SP) | JP Model | 1 | * |
| | 320 | nsp | 00D 505 0038 043 | POLY COVER | | 1 | |
| | 321 | nsp | 00D 515 0944 406 | WARRANTY (HOME) | E3 Model | 1 | |
| | 322 | | 00D 511 4467 000 | INST.MANUAL(3930E3) | E3 Model | 1 | * |
| | 322 | | 00D 511 4531 004 | INST.MANUAL(3930E2) | E2 Model | 1 | * |
| | 322 | | 00D 511 4532 003 | INST.MANUAL(3930JP) | JP Model | 1 | * |
| | 323 | nsp | 00D 515 0921 607 | S.S.LIST(EX) | E3,E2 Model | 1 | |
| | 323 | nsp | 00D 515 0918 500 | SERVICE STATION LIST | JP Model | 1 | |
| | 330 | nsp | 00D 505 0038 043 | POLY COVER | | 1 | |
| | 331 | | 00D 399 1059 002 | REMOCON(RC1038) | | 1 | * |
| ⚠ | 332 | | 00D 206 2225 009 | AC CORD SET(E3) D8.5 | E3 Model | 1 | |
| ⚠ | 332 | | 00D 206 2203 005 | AC CORD SET (E2) | E2 Model | 1 | |
| ⚠ | 332 | | 00D 206 2222 002 | AC CORD SET(J) D8.0 | JP Model | 1 | |
| | 333 | | 00D 203 5224 008 | 3P PIN CORD | E3,JP Model | 1 | |
| | 333 | | 00D 203 5392 008 | 3P PIN CORD(RoHS) | E2 Model | 1 | * |
| | 334 | | 00D 204 3006 001 | 8P MODULAR CABLE | | 1 | |
| | 335 | | - | BATTERY(UM-3)ASS'Y | | 1 | |
| | 340 | | - | CONT.CARD(L)SUB ASSY | E3,E2 Model | 1 | |
| | 341 | nsp | 00D 515 0919 208 | GUARANTEE CARD(S) | JP Model | 1 | |
| | 342 | nsp | 00D 517 1512 024 | UPC LABEL(3930CIKE3) | E3 Model | 1 | * |
| | 342 | nsp | 00D 517 1521 028 | E2 POS LABEL(3930BKE2) | Black E2 Model | 1 | * |
| | 342 | nsp | 00D 517 1521 002 | E2 POS LABEL(3930SRE2) | Silver E2 Model | 1 | * |
| | 342 | nsp | 00D 517 1521 015 | E2 POS LABEL(3930SPE2) | Premium Silver E2 Model | 1 | * |
| | 342 | nsp | 00D 517 1477 075 | POS LABEL(3930SP) | JP Model | 1 | * |
| | 343 | nsp | 00D 513 4162 000 | CI STICKER | E3 Model | 2 | |
| | 344 | nsp | 00D 513 9111 030 | COLOR LABEL | Premium Silver Model | 2 | |
| | 344 | nsp | 00D 513 9111 056 | COLOR LABEL | Silver Model | 2 | |
| | 345 | | - | S.NO.SHEET SUB ASS'Y | JP Model | 1 | |

## WIRING DIAGRAM

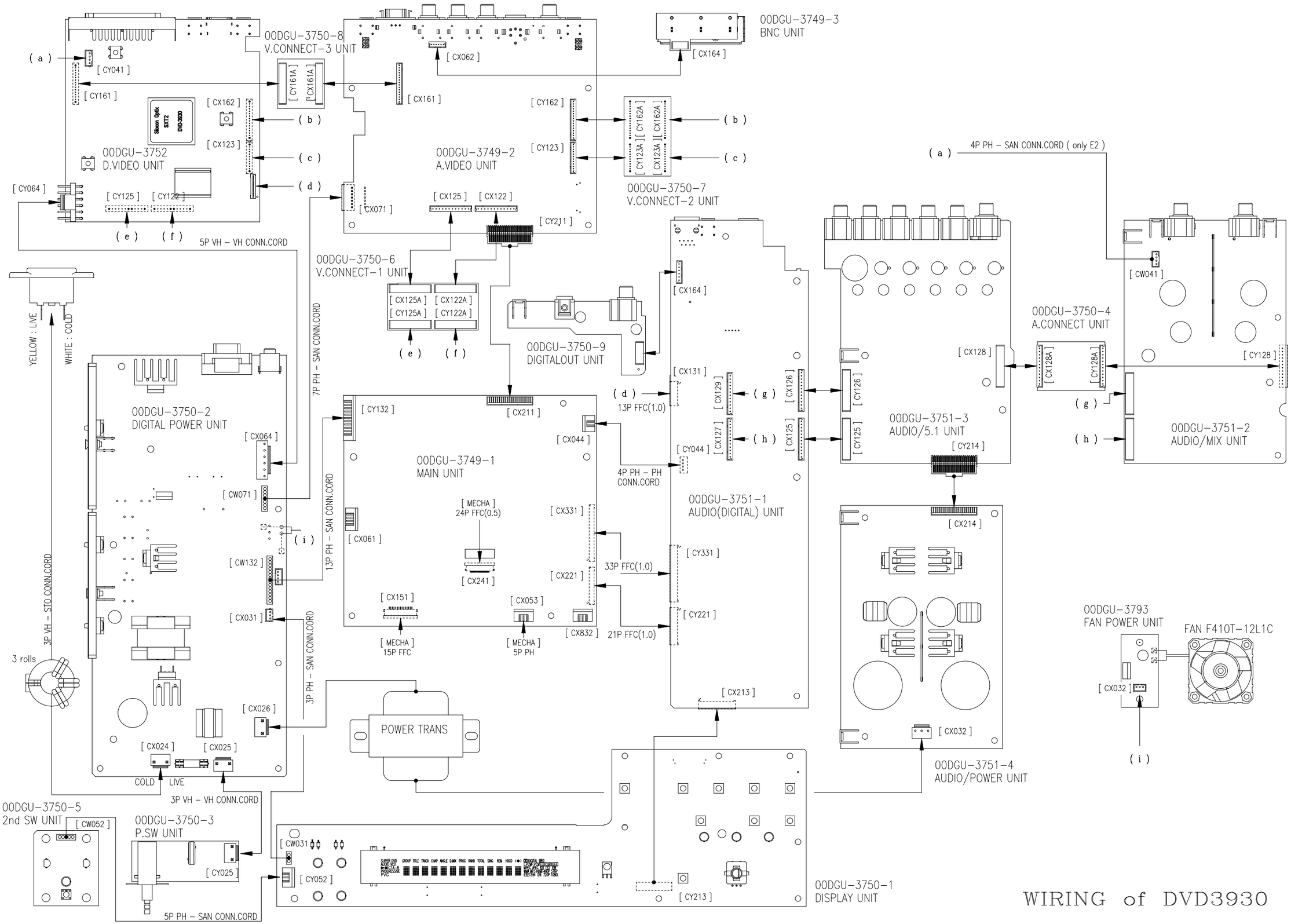


WIRING of DVD3930

## MEASURING METHOD AND WAVEFORMS

To check the waveforms on the Main P.W.B., the GND (−) probe of the oscilloscope to “Vref” point.
(Except for Inner SW, TRVSW)

NOTES

Measuring Disc: DVD/DVDT-S01 or TDV-520A
CD/TCD-784

(It is better to use wires for extending between the probe and test points.)

- When watching the HF waveform, use the extending wire as short as possible.
- When HF waveform is noisy or cannot discriminate the eye-pattern, replace the Traverse Unit after measuring the Iop.
- ① ~ ⑰ points have the certain test points shown below.

## 各部の波形と測定方法

メイン基板の波形チェックを行うためにはオシロスコープの GND(−) プローブを "Vref" ポイントに接続します。

注　意

測定ディスク：　DVD/DVDT-S01 or TDV-520A
CD/TCD-784

（テストポイントとプローブ間に延長ワイヤを使用するのがより良い方法です。）

- ＨＦ 波形を観測する場合、できるだけ短い延長ワイヤを使用してください。
- ＨＦ 波形がノイズで不明瞭、またはアイパターンが識別不能の場合は Iop 測定後にトラバースユニットを交換してください。
- ポイント①〜⑰は、下図のように特定テストポイント付きです。

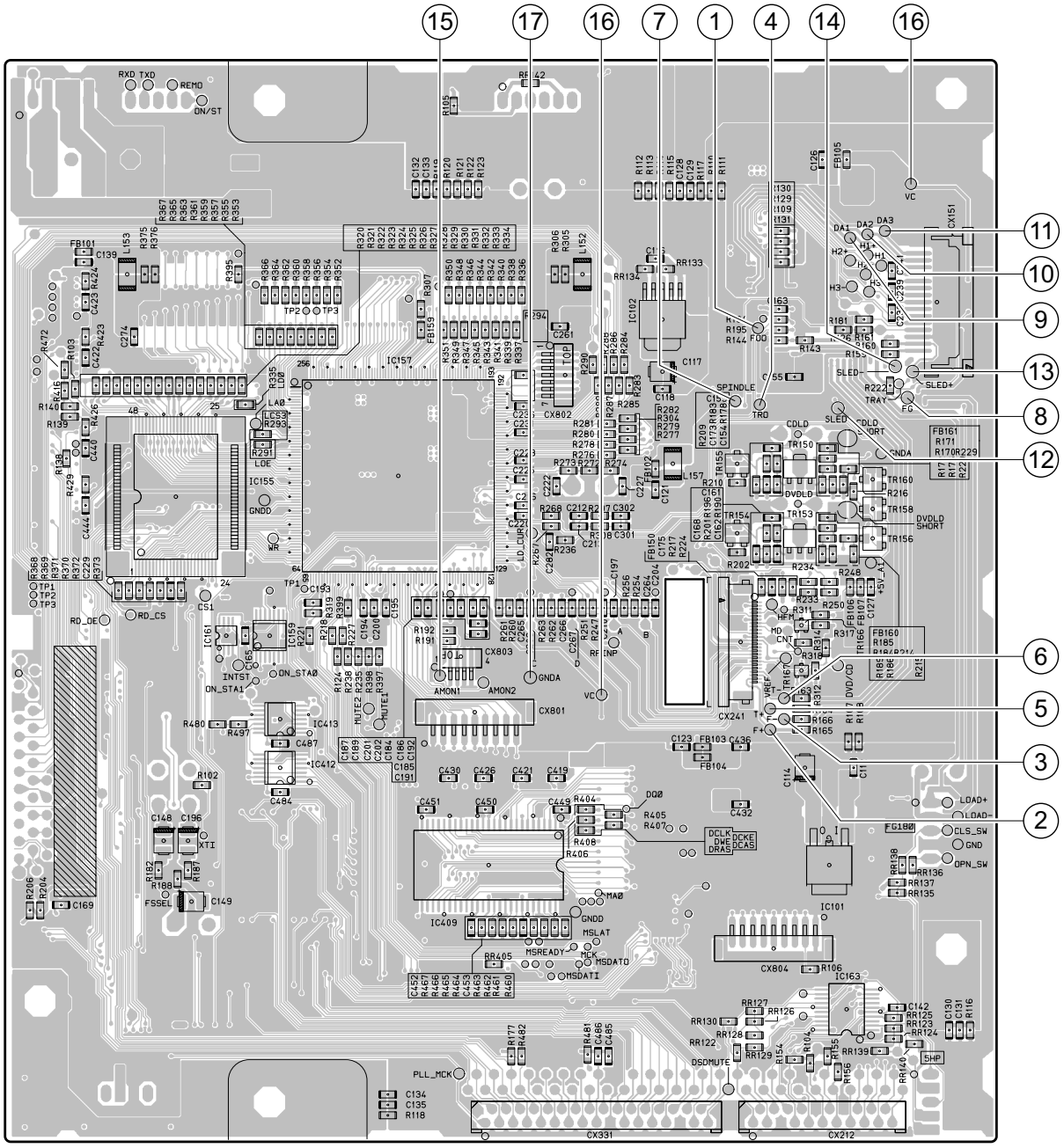


**GU-3749-1 Main P.W.B. Unit : Foil Side**

＊ Reference voltage of AMON1 ⑮ is GNDA ⑰ , and reference voltage of other point is VC ⑯ .
＊ AMON1 ⑮の基準電圧は GNDA ⑰で、他のポイントの基準電圧は VC ⑯です。

# WAVEFORMS

## GU-3749-1 MAIN P.W.B.

### DVD PLAY Disc: TDV-520A

#### DVRF waveform

⑮AMON1

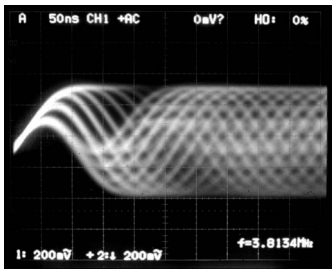


#### DVD LOADING ⟶ PLAY

①FOO
②F+
③F–

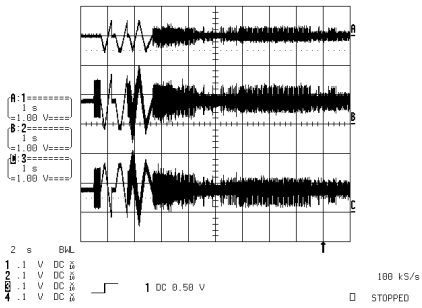


#### DVD PLAY

④TRO
⑤T+
⑥T–

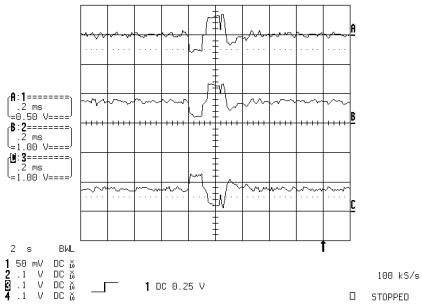


#### DVD PLAY (INNER)

⑦SPINDLE
⑧FG
⑨DA1

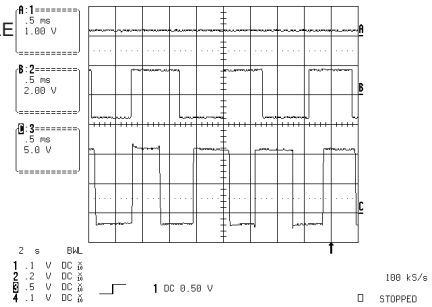


#### SEARCH (INNER ⟶ OUTER)

⑫SLED
⑬SLED+
⑭SLED–

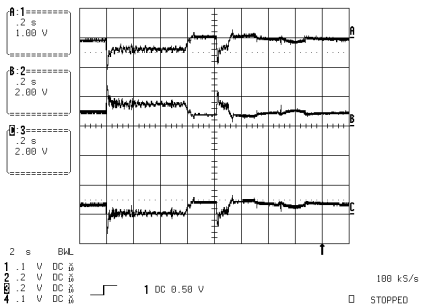


### CD PLAY Disc: TCD-784

#### DVRF waveform

⑮AMON1

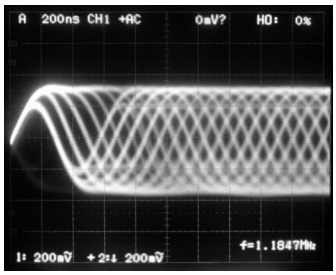


#### CD LOADING ⟶ PLAY

①FOO
②F+
③F–

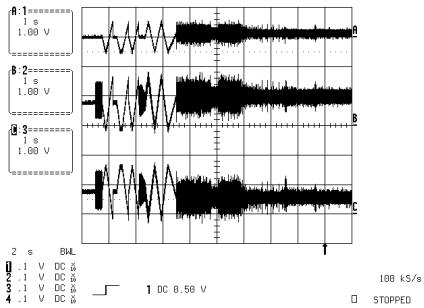


#### CD PLAY

④TRO
⑤T+
⑥T–

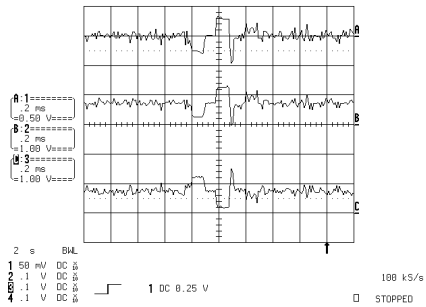


#### CD PLAY (INNER)

⑦SPINDLE
⑧FG
⑨DA1

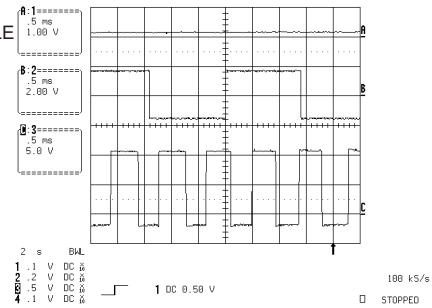


#### SEARCH (INNER ⟶ OUTER)

⑫SLED
⑬SLED+
⑭SLED–

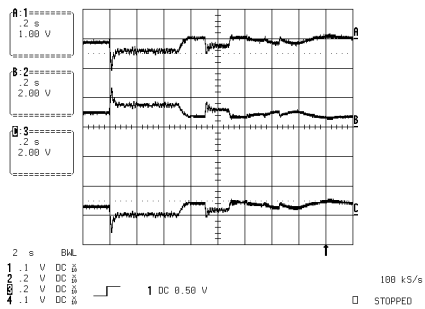

## GU-3749-2 VIDEO P.W.B.

V1

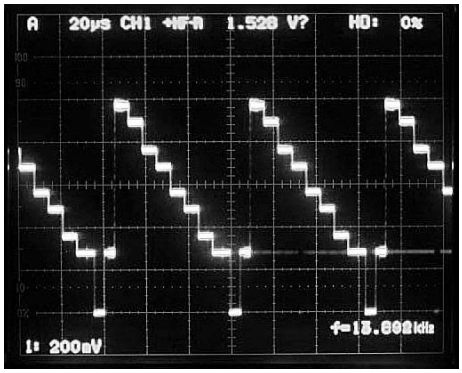


V5

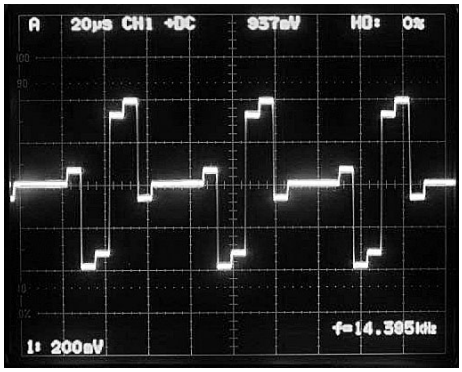


V2

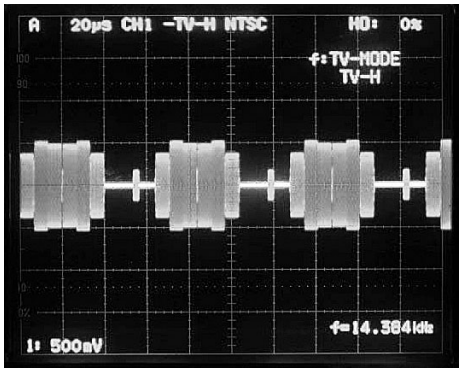


V6

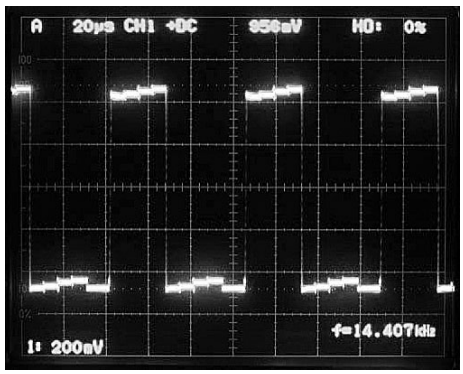


V3

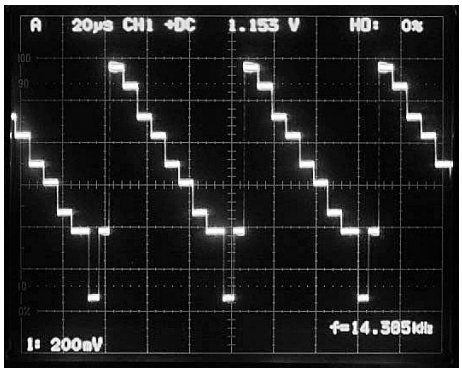


V7

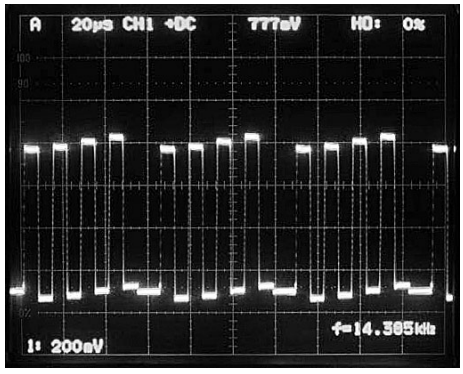


V4

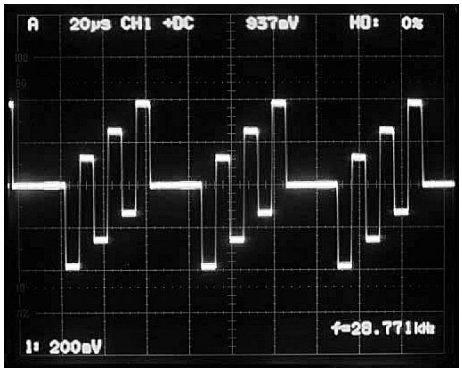


V8

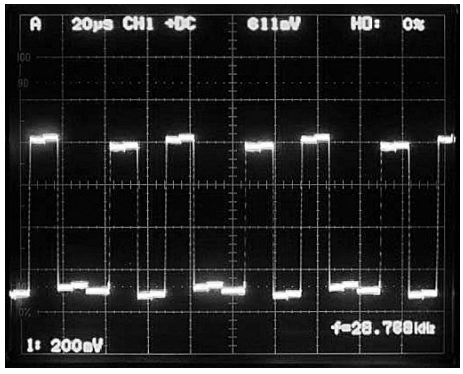

## NOTE FOR SCHEMATIC DIAGRAM

WARNING:
Parts marked with this symbol ⚠ have critical characteristics. Use ONLY replacement parts recommended by the manufacturer.

CAUTION:
Before returning the unit to the customer, make sure you make either (1) a leakage current check or (2) a line to chassis resistance check. If the leakage current exceeds 0.5 milliamps, or if the resistance from chassis to either side of the power cord is less than 460 kohms, the unit is defective.

WARNING:
DO NOT return the unit to the customer until the problem is located and corrected.

NOTICE:
ALL RESISTANCE VALUES IN OHM. k=1,000 OHM
M=1,000,000 OHM
ALL CAPACITANCE VALUES IN MICRO FARAD.
P=MICRO-MICRO FARAD
EACH VOLTAGE AND CURRENT ARE MEASURED AT NO SIGNAL INPUT CONDITION.
CIRCUIT AND PARTS ARE SUBJECT TO CHANGE WITHOUT PRIOR NOTICE.

## 配線図について

⚠印の部品は安全を維持するために重要な部品です。
従って交換時は必ず指定の部品を使用してください。

注）
(1) 指定なき抵抗値は Ω、k は kΩ、M は MΩ を示す。
(2) 指定なきコンデンサーの値は μF、p は pF を示す。
(3) 各部の電圧は無信号の値を示す。
(4) この配線図は基本配線図です。改良等のため変更することがありますのでご了承ください。

# SCHEMATIC DIAGRAMS (1/20)

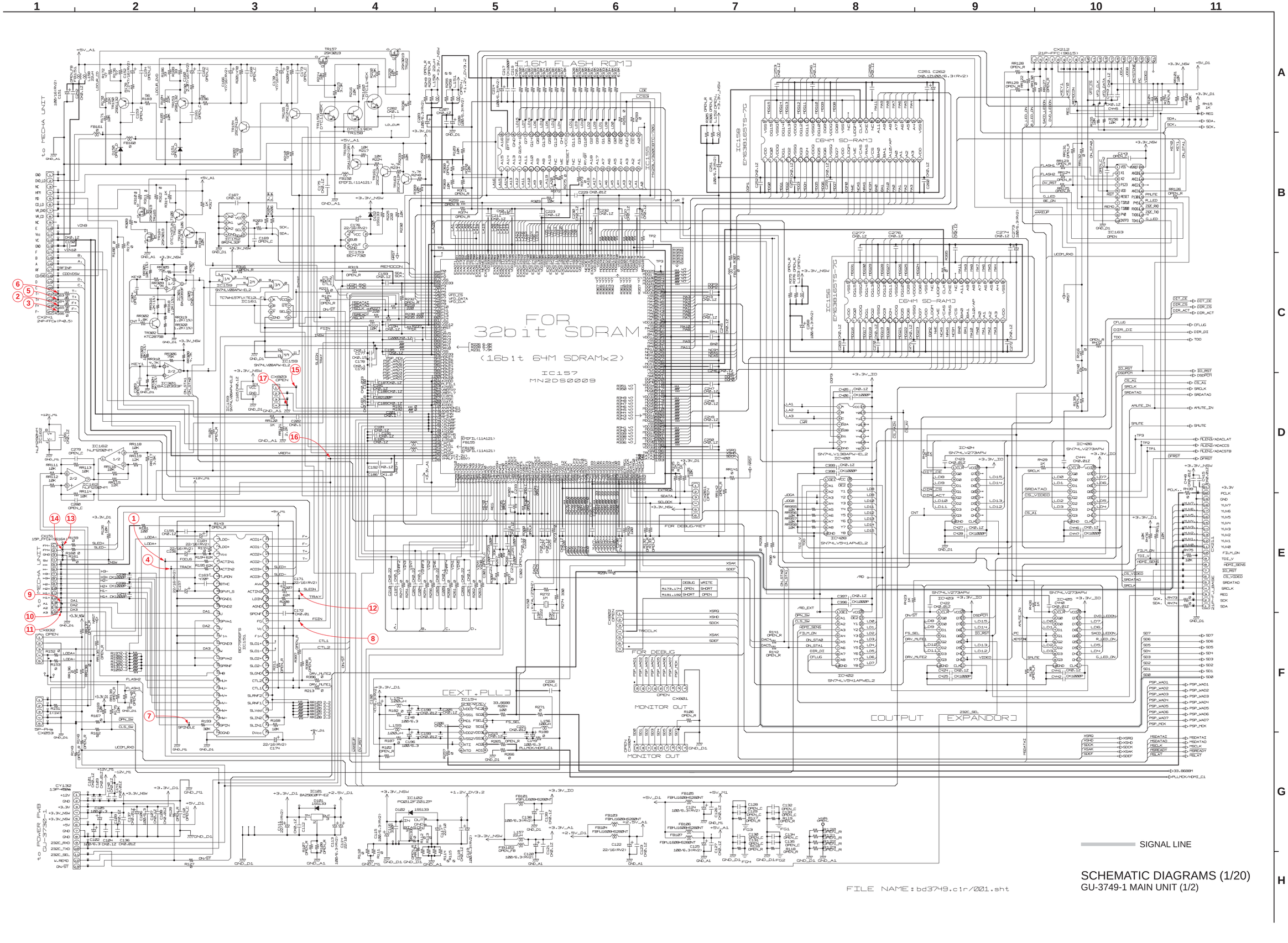


SCHEMATIC DIAGRAMS (1/20)
GU-3749-1 MAIN UNIT (1/2)

## SCHEMATIC DIAGRAMS (2/20)

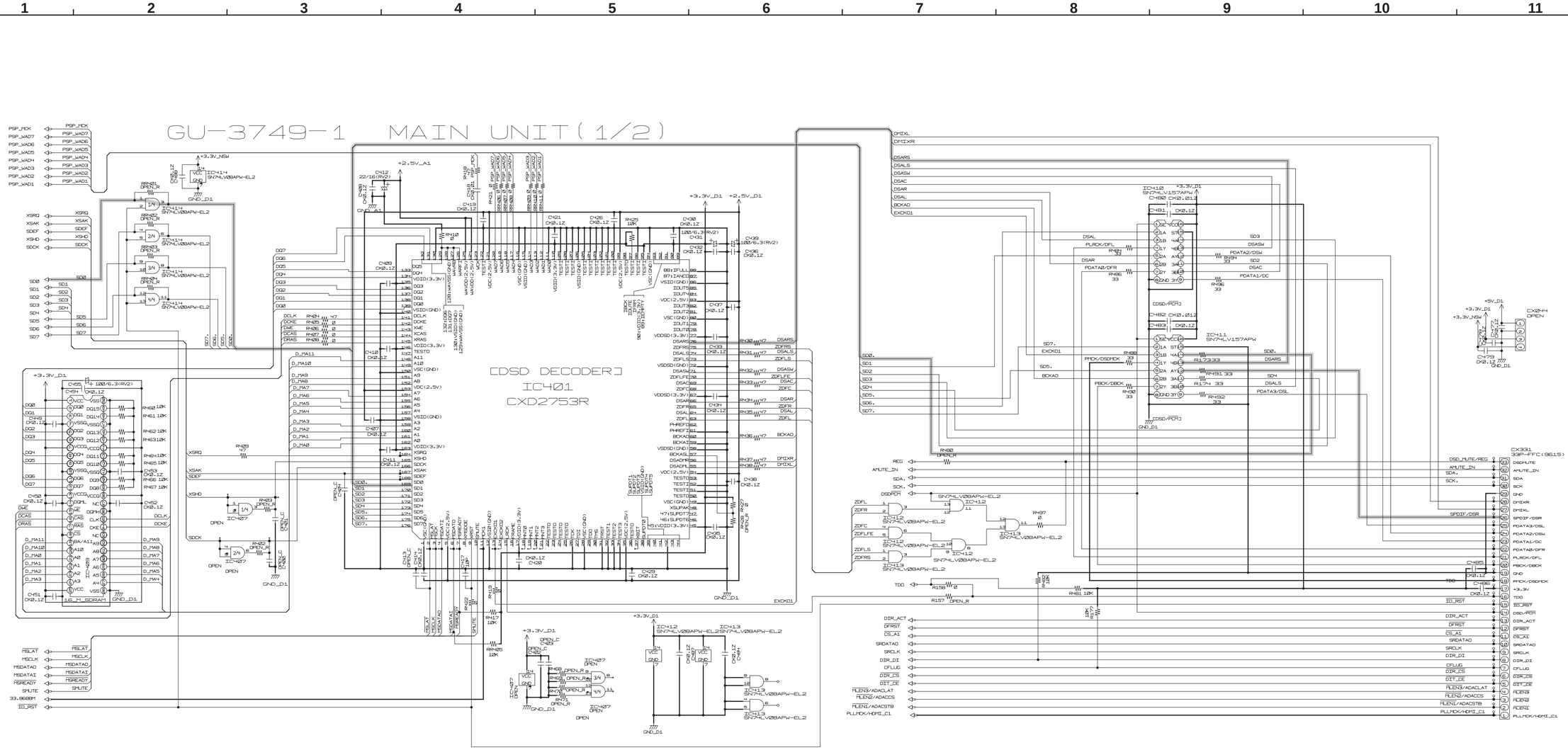


SIGNAL LINE

SCHEMATIC DIAGRAMS (2/20)
GU-3749-1 MAIN UNIT (2/2)

FILE NAME:bd3749.c1r/002.sht

# SCHEMATIC DIAGRAMS (3/20)

1 2 3 4 5 6 7 8 9 10 11

A B C D E F G H

GU-3749-1
From MAIN UNIT
CE-16 CX211J

GU-3749-2
VIDEO UNIT [ 1 / 2 ]

[VIDEO I/O EXP]

GU-3749-3
BNC UNIT

[VIDEO ENCODER]

IC501
ADV7324

JAPAN MODEL ONLY

PROGRESSIVE VIDEO SIGNAL LINE

INTERLACE VIDEO SIGNAL LINE

FILE NAME:bd3749.c1r/003.sht

SCHEMATIC DIAGRAMS (3/20)
GU-3749-2 VIDEO UNIT (1/2)
GU-3749-3 BNC UNIT
(for E3 model)

# SCHEMATIC DIAGRAMS (4/20)

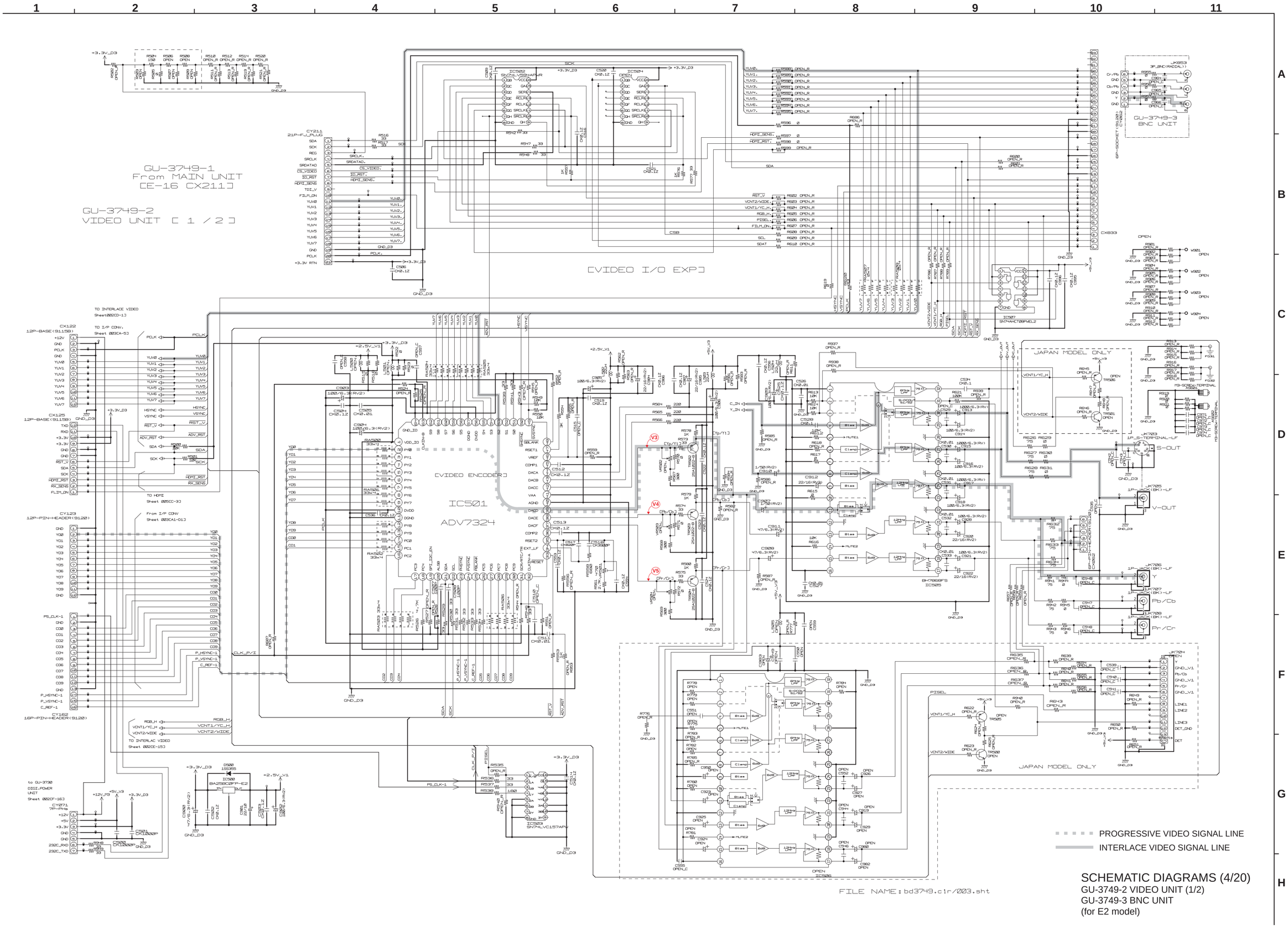


FILE NAME:bd3749.c1r/003.sht

## SCHEMATIC DIAGRAMS (4/20)

GU-3749-2 VIDEO UNIT (1/2)
GU-3749-3 BNC UNIT
(for E2 model)

# SCHEMATIC DIAGRAMS (5/20)

GU-3749-1
From MAIN UNIT
CE-16 CX211J

GU-3749-2
VIDEO UNIT (1/2)

[VIDEO I/O EXP]

[VIDEO ENCODER]

IC501
ADV7324

GU-3749-3
BNC UNIT

JAPAN MODEL ONLY

TO INTERLACE VIDEO
Sheet 002CD-13

TO I/P CONV.
Sheet 003CA-53

TO HDMI
Sheet 005CC-33

From I/P CONV
Sheet 003CA1-013

TO INTERLAC VIDEO
Sheet 002CE-15J

to GU-3730
DIGI.POWER
UNIT
Sheet 002CF-16J

PROGRESSIVE VIDEO SIGNAL LINE
INTERLACE VIDEO SIGNAL LINE

FILE NAME:bd3749.c1r/003.sht

## SCHEMATIC DIAGRAMS (5/20)

GU-3749-2 VIDEO UNIT (1/2)
GU-3749-3 BNC UNIT
(for JP model)

# SCHEMATIC DIAGRAMS (6/20)

VIDEO UNIT [ 2 / 2 ]
GU-3749-2

E2 MODEL ONLY

[VIDEO ENCODER]

IC550
ADV7324

(EUROPE MODEL ONLY)

| | YC-H | RGB-H |
|---|---|---|
| V OUT | L | L |
| Y/C OUT | H | L |
| RGB OUT | L | H |

INTERLACE VIDEO SIGNAL LINE

FILE NAME:bd3749.c1r/004.sht

SCHEMATIC DIAGRAMS (6/20)
GU-3749-2 VIDEO UNIT (2/2)
(for E3 model)

# SCHEMATIC DIAGRAMS (7/20)

VIDEO UNIT [ 2 / 2 ]
GU-3749-2

E2 MODEL ONLY

[VIDEO ENCODER]

IC550
ADV7324

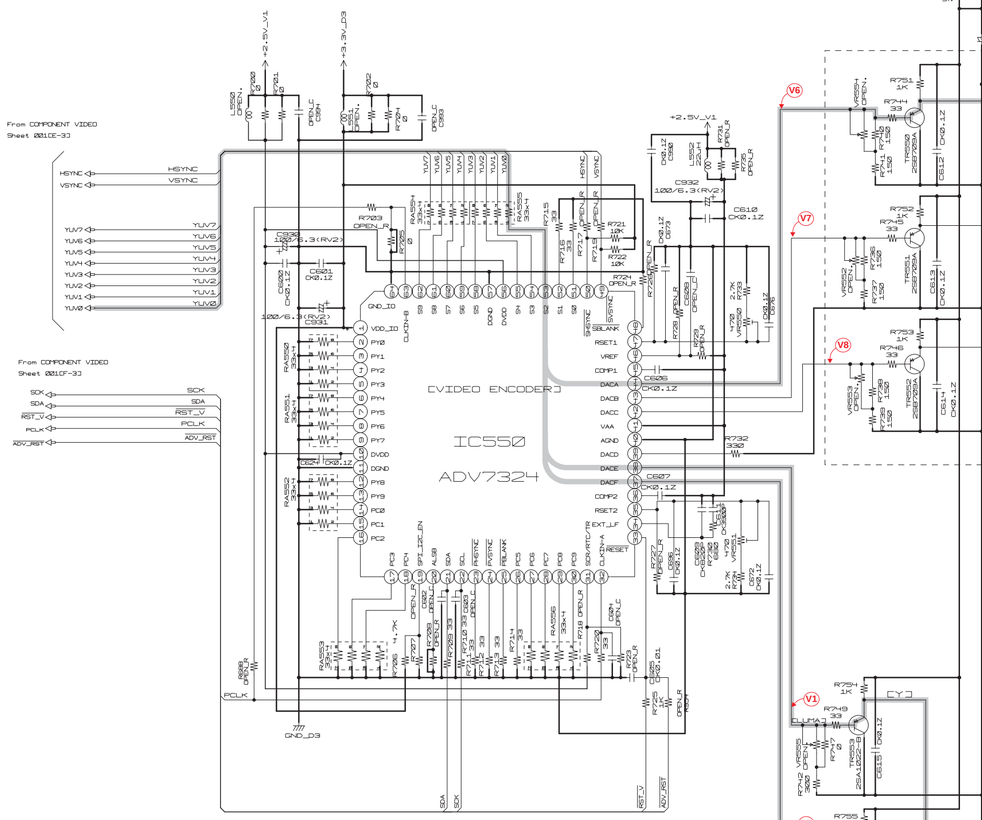


| | YC_H | RGB_H |
|---|---|---|
| V OUT | L | L |
| Y/C OUT | H | L |
| RGB OUT | L | H |

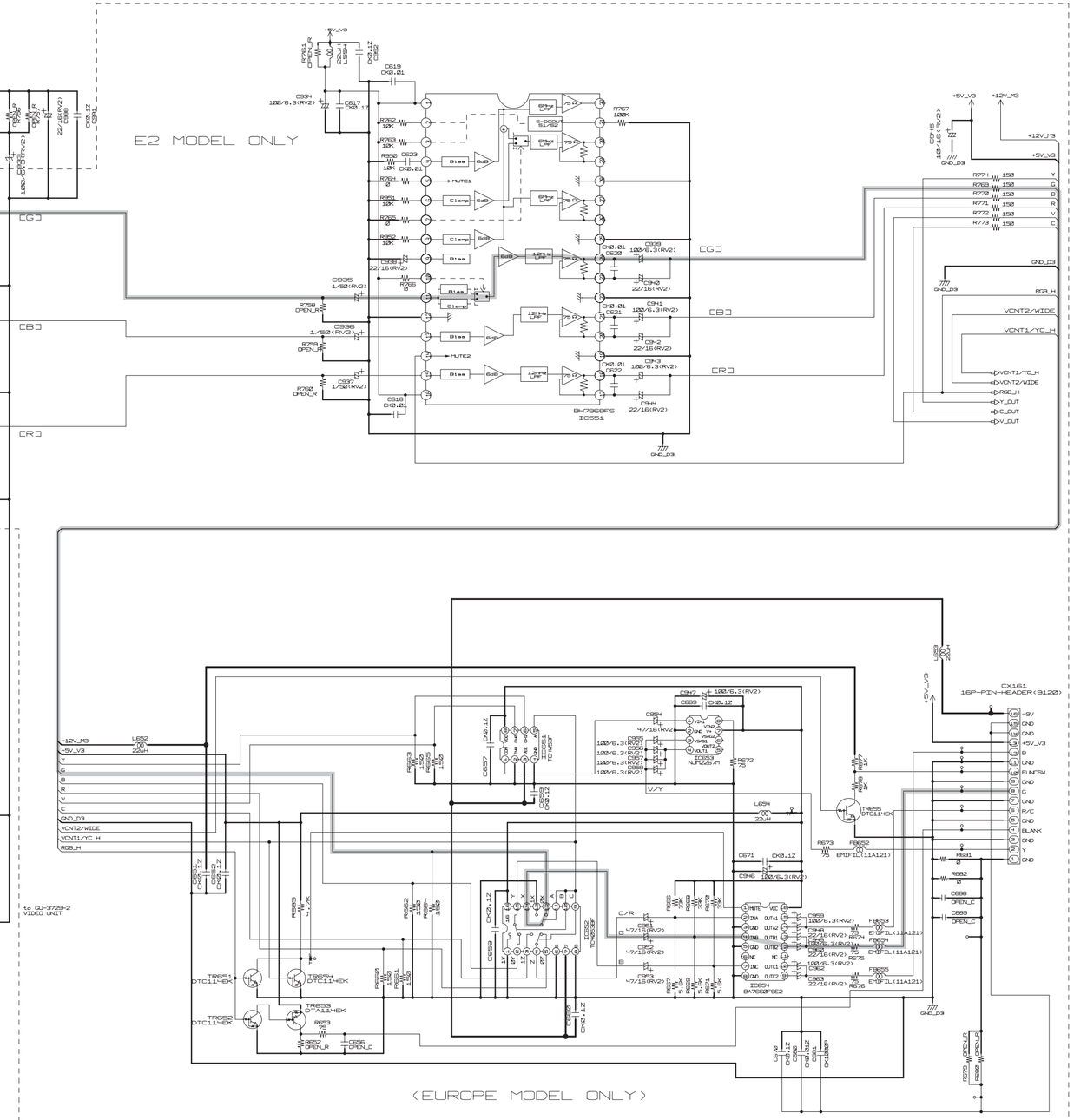


| | YC-H | RGB-H |
|---|---|---|
| V OUT | L | L |
| YC OUT | H | L |
| RGB OUT | L | H |

INTERLACE VIDEO SIGNAL LINE

FILE NAME:bd3749.c1r/004.sht

SCHEMATIC DIAGRAMS (7/20)
GU-3749-2 VIDEO UNIT (2/2)
(for E2 model)

# SCHEMATIC DIAGRAMS (8/20)

VIDEO UNIT [ 2 / 2 ]
GU-3749-2

E2 MODEL ONLY

[VIDEO ENCODER]

IC550
ADV7324

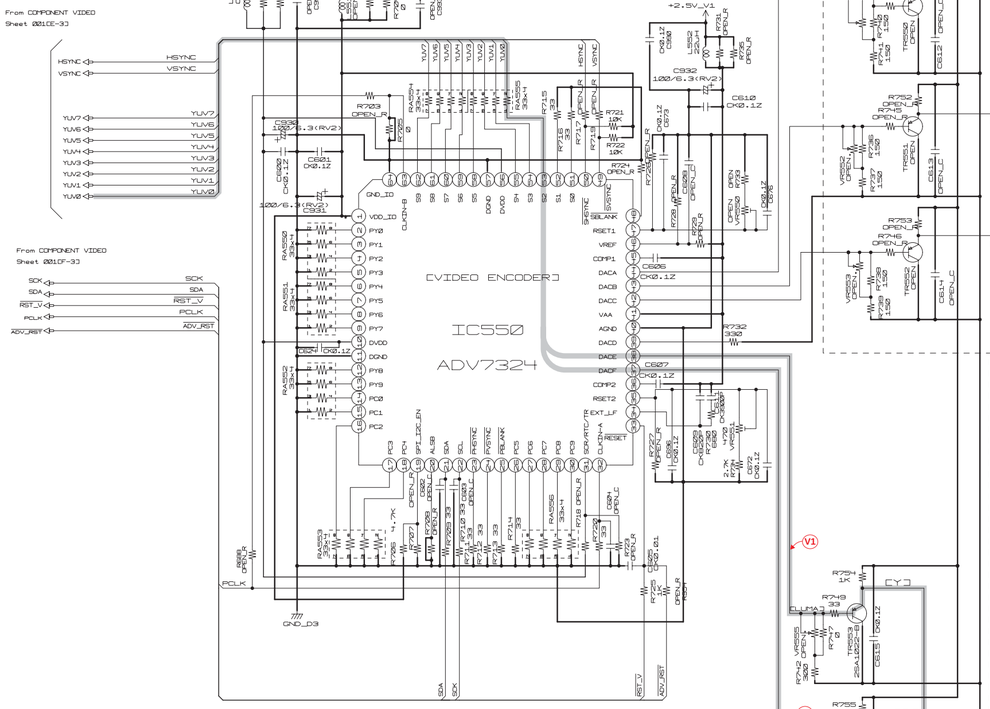


| | YC_H | RGB_H |
|---|---|---|
| V OUT | L | L |
| Y/C OUT | H | L |
| RGB OUT | L | H |




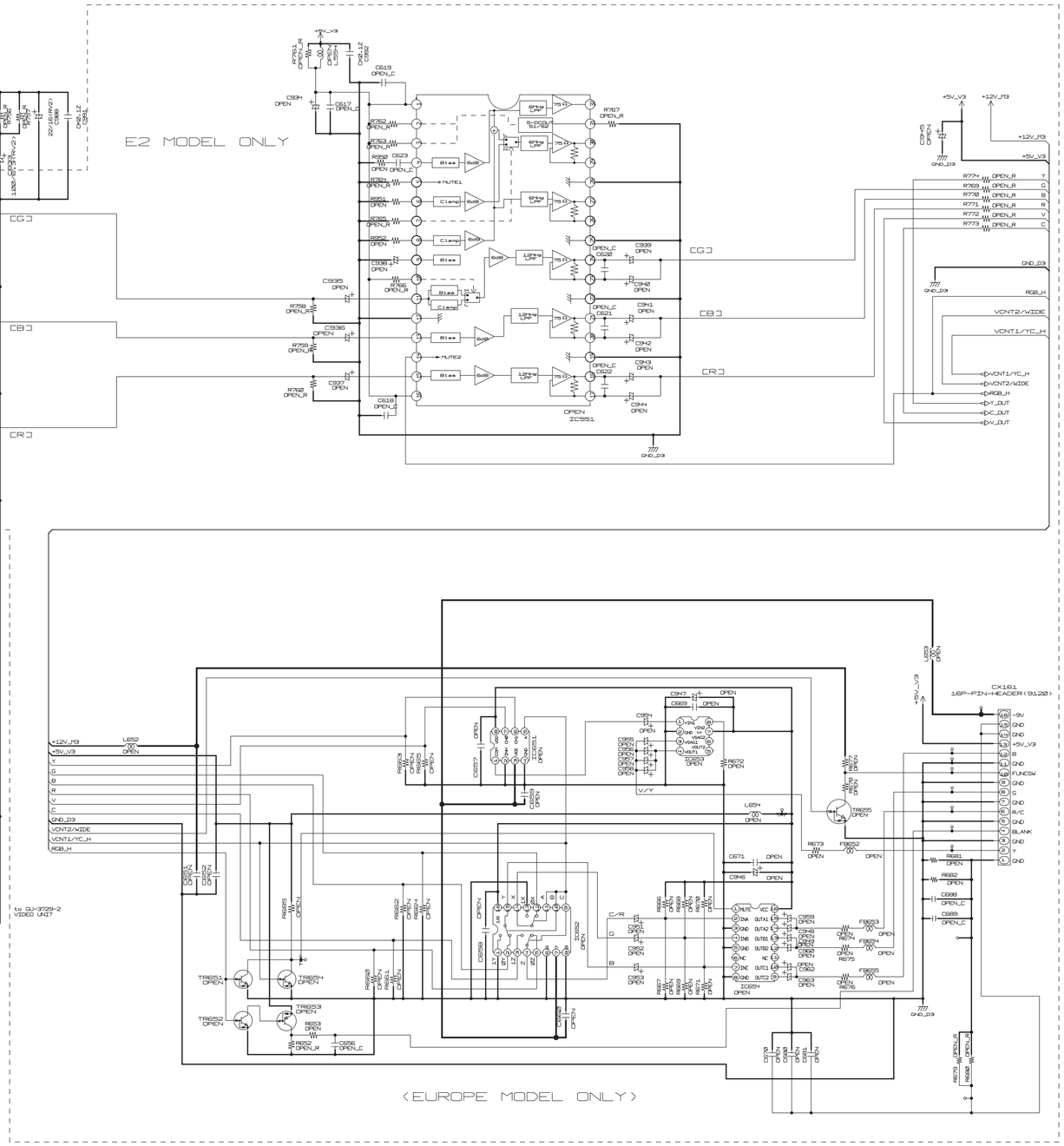


| | YC-H | RGB-H |
|---|---|---|
| V OUT | L | L |
| YC OUT | H | L |
| RGB OUT | L | H |

INTERLACE VIDEO SIGNAL LINE

SCHEMATIC DIAGRAMS (8/20)
GU-3749-2 VIDEO UNIT (2/2)
(for JP model)

## SCHEMATIC DIAGRAMS (9/20)

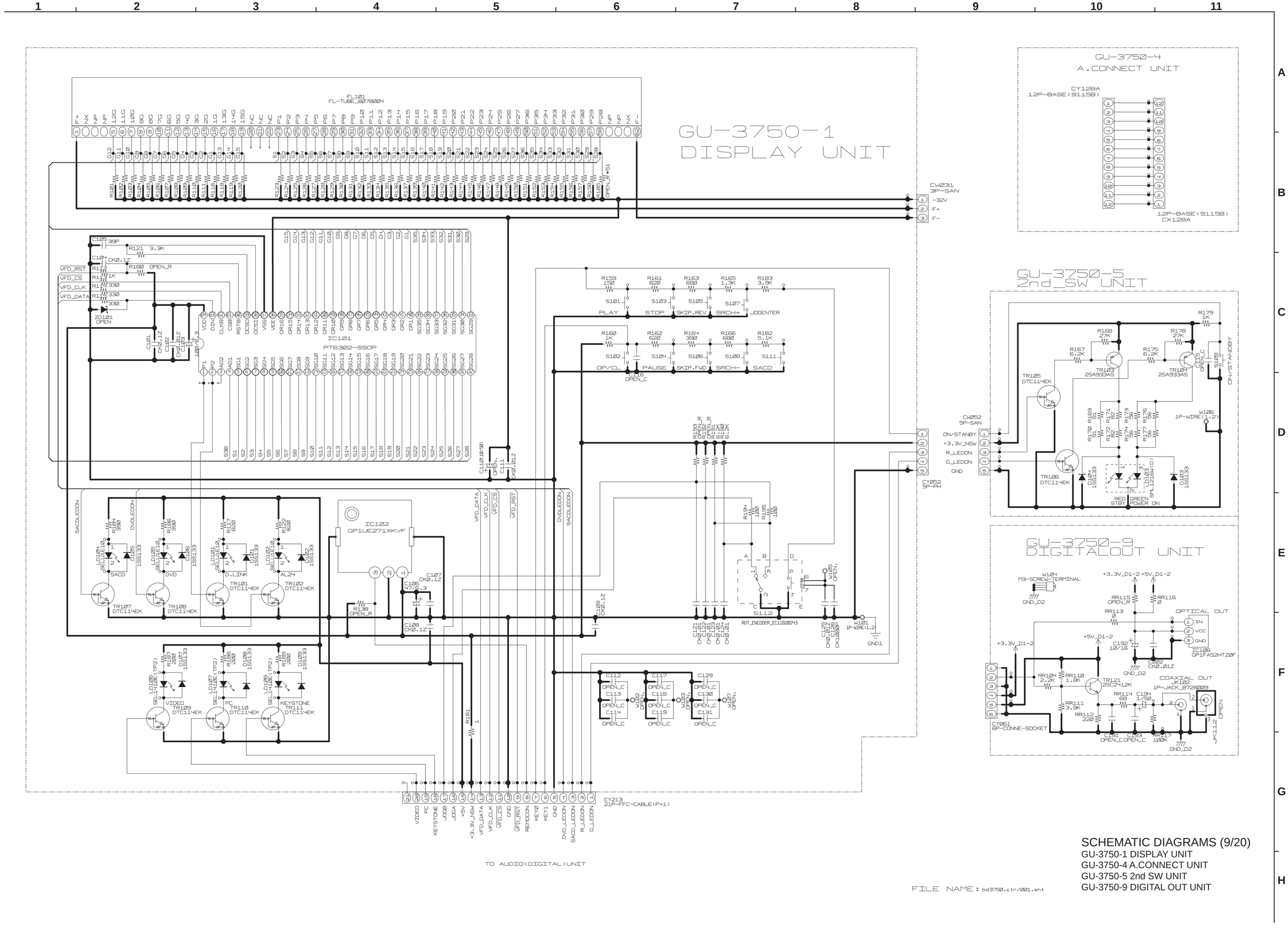


FILE NAME : bd3750.ctr/001.sht

SCHEMATIC DIAGRAMS (9/20)
GU-3750-1 DISPLAY UNIT
GU-3750-4 A.CONNECT UNIT
GU-3750-5 2nd SW UNIT
GU-3750-9 DIGITAL OUT UNIT

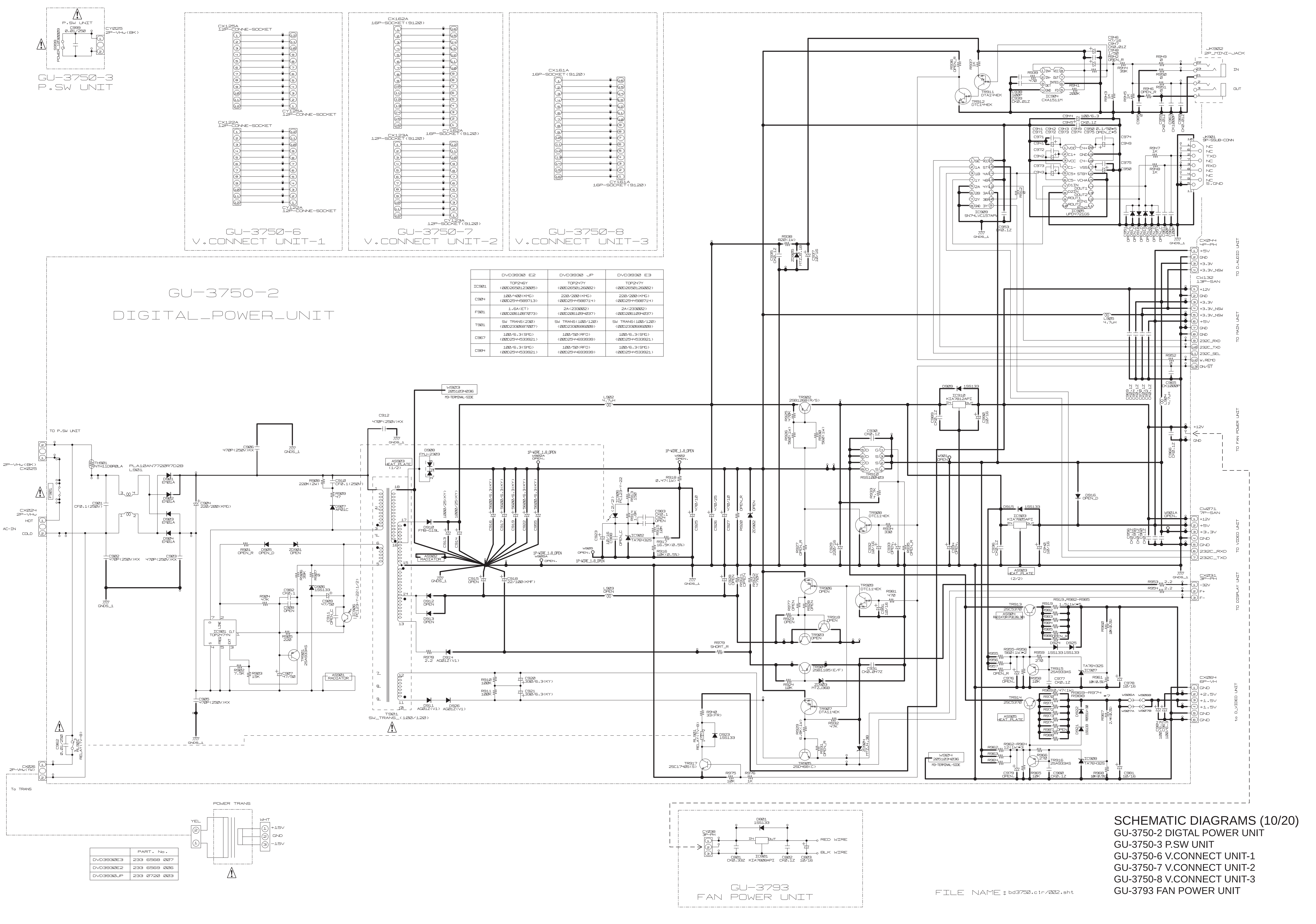


| | DVD3930 E2 | DVD3930 JP | DVD3930 E3 |
|---|---|---|---|
| IC901 | TOP246Y (00D2650123005) | TOP247Y (00D2650126002) | TOP247Y (00D2650126002) |
| C904 | 100/400(KMG) (00D2544589713) | 220/200(KMG) (00D2544588714) | 220/200(KMG) (00D2544588714) |
| F901 | 1.6A(ET) (00D2061087073) | 2A(233002) (00D2061094037) | 2A(233002) (00D2061094037) |
| T901 | SW TRANS(230) (00D2330687007) | SW TRANS(100/120) (00D2330686008) | SW TRANS(100/120) (00D2330686008) |
| C967 | 100/6.3(SMG) (00D2544533921) | 100/50(RFO) (00D2544693939) | 100/6.3(SMG) (00D2544533921) |
| C984 | 100/6.3(SMG) (00D2544533921) | 100/50(RFO) (00D2544693939) | 100/6.3(SMG) (00D2544533921) |

| | PART. No. |
|---|---|
| DVD3930E3 | 233 6568 007 |
| DVD3930E2 | 233 6569 006 |
| DVD3930JP | 233 0720 003 |

## SCHEMATIC DIAGRAMS (10/20)

GU-3750-2 DIGTAL POWER UNIT
GU-3750-3 P.SW UNIT
GU-3750-6 V.CONNECT UNIT-1
GU-3750-7 V.CONNECT UNIT-2
GU-3750-8 V.CONNECT UNIT-3
GU-3793 FAN POWER UNIT

# SCHEMATIC DIAGRAMS (11/20)

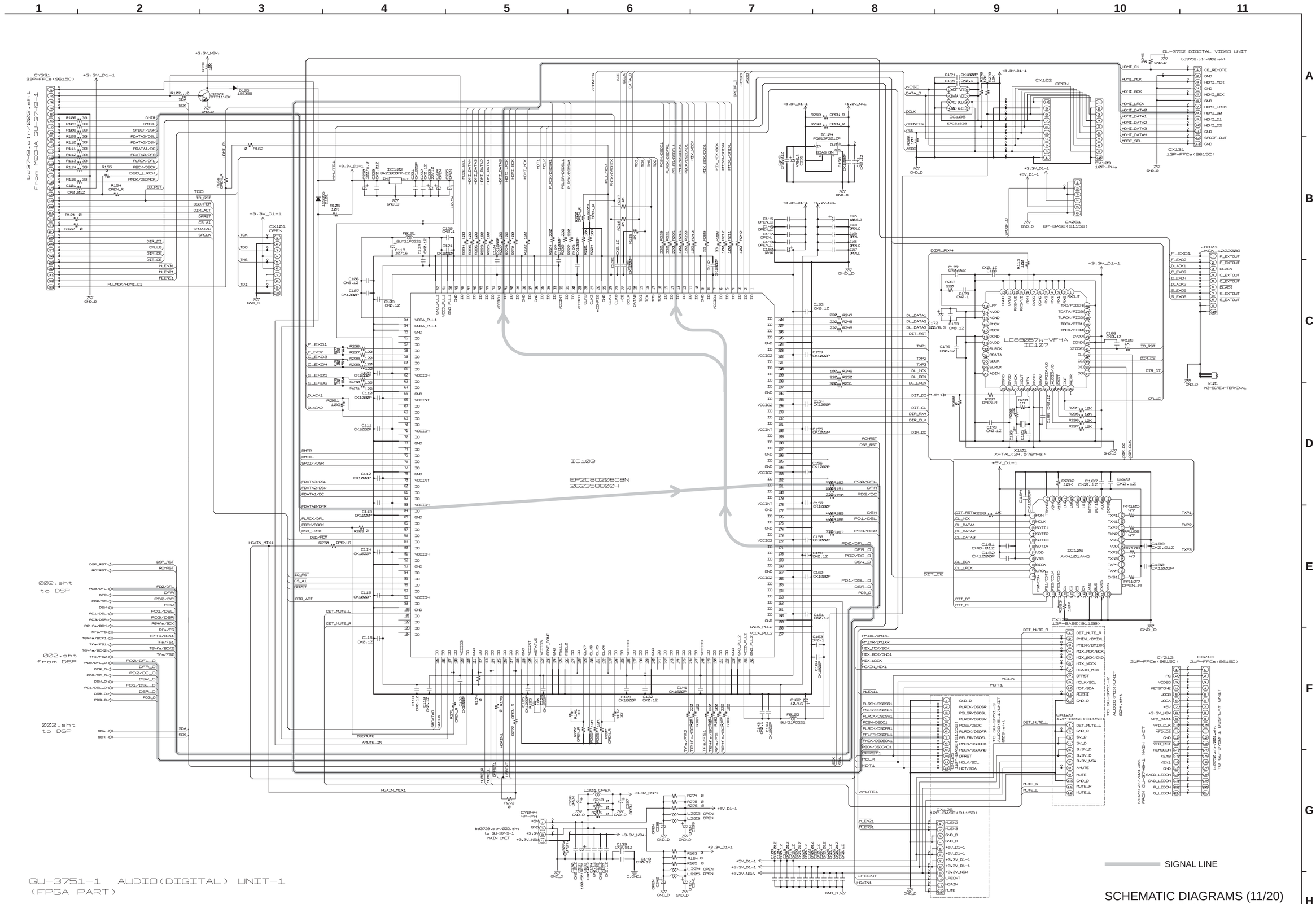

## SCHEMATIC DIAGRAMS (12/20)

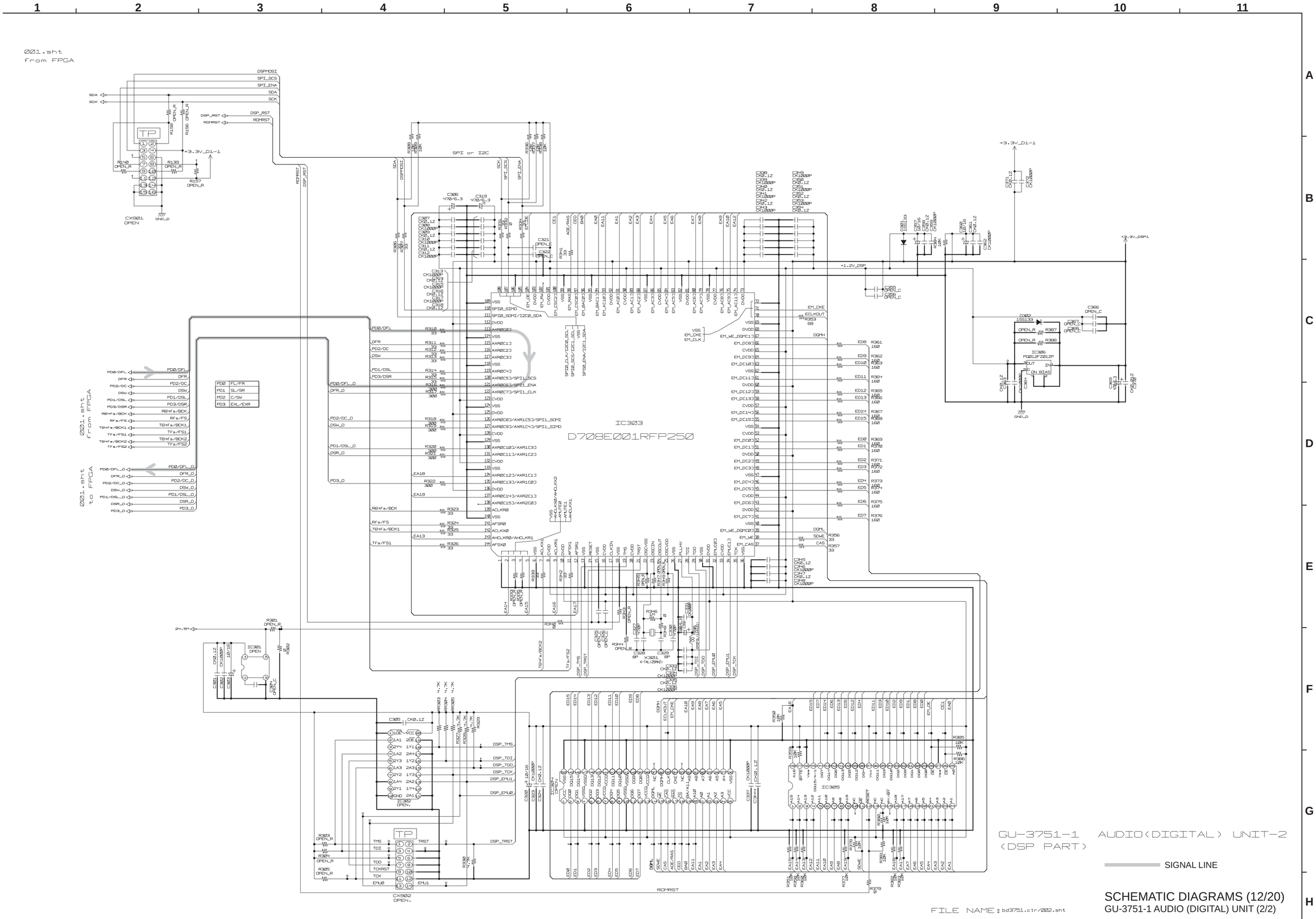


SCHEMATIC DIAGRAMS (12/20)
GU-3751-1 AUDIO (DIGITAL) UNIT (2/2)

# SCHEMATIC DIAGRAMS (13/20)

| | DVD3939E3/E2 | | DVD3930JP | |
|---|---|---|---|---|
| C503 | 00D2544693942 | CE04W1H221MT(RF0) | 00D2544580709 | CE04W1H221MC(ROB) |
| C504 | 00D2544693942 | CE04W1H221MT(RF0) | 00D2544580709 | CE04W1H221MC(ROB) |
| L401 | 00D2350125905 | INDUCTOR(FLC32C220K)+3216 | OPEN | - |
| CC442 | 00D2544693939 | CE04W1H101MT(RF0) | 00D2544580709 | CE04W1H221MC(ROB) |
| CC443 | 00D2544693939 | CE04W1H101MT(RF0) | 00D2544580709 | CE04W1H221MC(ROB) |
| CC444 | 00D2544693939 | CE04W1H101MT(RF0) | 00D2544580709 | CE04W1H221MC(ROB) |
| CC445 | 00D2544693939 | CE04W1H101MT(RF0) | 00D2544580709 | CE04W1H221MC(ROB) |
| CC446 | 00D2544693939 | CE04W1H101MT(RF0) | 00D2544580709 | CE04W1H221MC(ROB) |
| CC447 | 00D2544693939 | CE04W1H101MT(RF0) | 00D2544580709 | CE04W1H221MC(ROB) |
| R613 | OPEN | - | 00D2472018903 | RM73B--0R0KT +1608 |
| R614 | OPEN | - | 00D2472018903 | RM73B--0R0KT +1608 |
| R615 | OPEN | - | 00D2472018903 | RM73B--0R0KT +1608 |

GU-3751-3 AUDIO(5.1) UNIT

SIGNAL LINE

FILE NAME : bd3751.c1r/003.sht

SCHEMATIC DIAGRAMS (13/20)
GU-3751-3 AUDIO (5.1) UNIT

# SCHEMATIC DIAGRAMS (14/20)

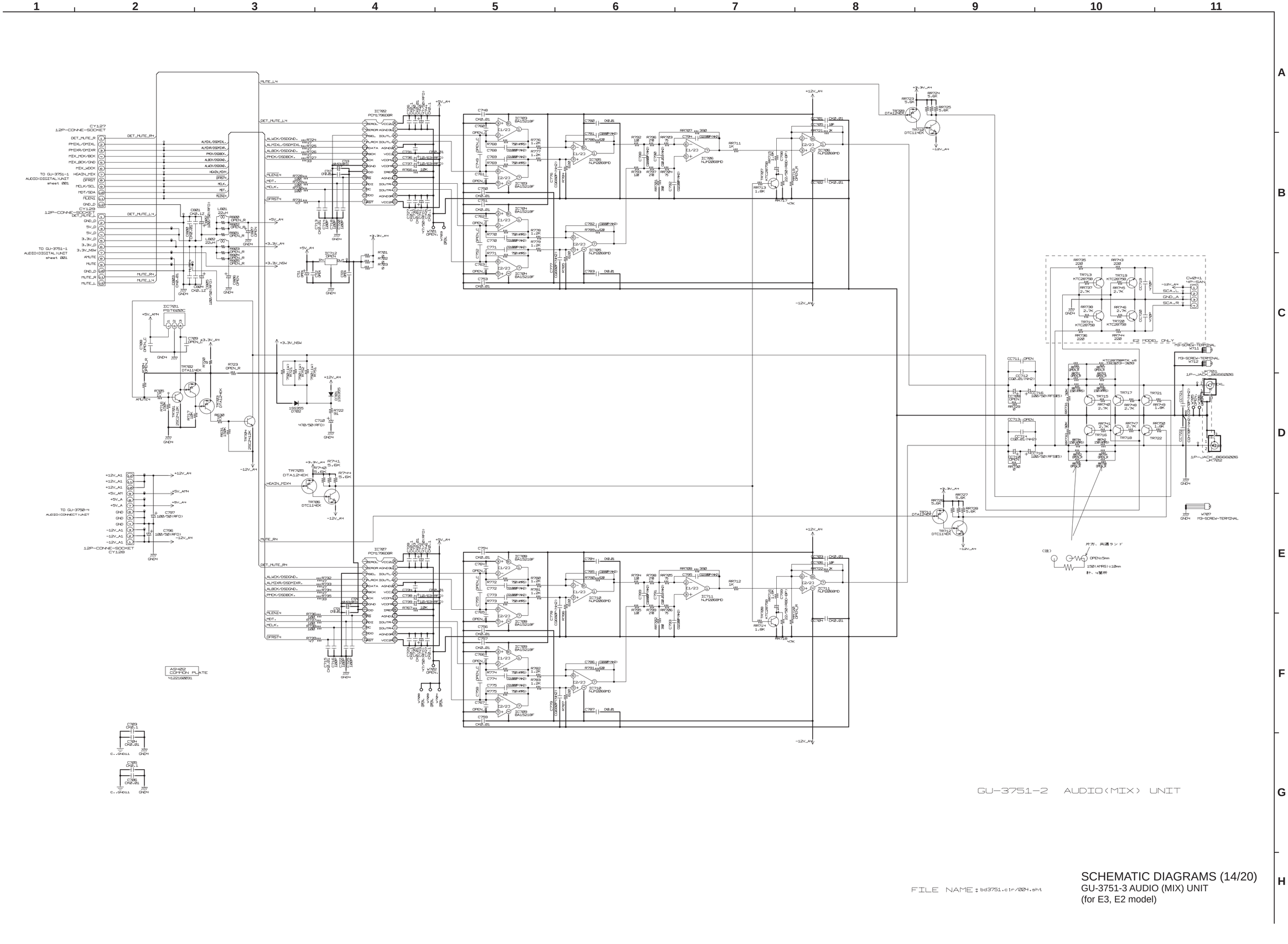
1
2
3
4
5
6
7
8
9
10
11
A
B
C
D
E
F
G
H
CY127
12P-CONNE-SOCKET
CY129
12P-CONNE-SOCKET
TO GU-3751-1
AUDIO(DIGITAL)UNIT
sheet 001
TO GU-3751-4
AUDIO(CONNECT)UNIT
DET_MUTE_R
PHIXL/DHIXL
PHIXR/DHIXR
MIX_MDK/BDK
MIX_BDK/GND
MIX_MDCK
HGAIN_MIX
DFRST
MCLK/SCL
MDT/SDA
MLEN1
GND_D
DET_MUTE_L
GND_D
5V_D
5V_D
3.3V_D
3.3V_D
3.3V_NSW
AMUTE
MUTE
GND_D
MUTE_R
MUTE_L
MUTE_R4
MUTE_L4
ALRDX/DSDRDX.
ALRDX/DSDRDX.
PRDX/DSDBDX.
ALBDX/DSDGND.
ALWDX/DSDGND.
HGAIN_MDX
DFRST.
MCLK.
MDT.
MLEN1
IC702
PCM1796DBQR
IC707
PCM1796DBQR
IC703
BA15218F
IC704
BA15218F
IC705
BA15218F
IC706
BA15218F
IC708
BA15218F
IC709
BA15218F
IC710
NJM2068FD
IC711
NJM2068FD
IC712
NJM2068FD
IC713
NJM2068FD
IC714
NJM2068FD
IC731
PST6626C
TR702
DTA114EK
TR703
2SC2412K
TR704
DTC114EK
TR705
DTA124EK
TR706
DTC114EK
TR707
DTA124EK
TR708
DTC114EK
TR709
DTA124EK
TR710
DTC114EK
TR711
DTA124EK
TR712
DTC114EK
D702
1SS355
D703
1SS355
D704
1SS355
D705
1SS355
D706
1SS355
D707
1SS355
D708
1SS355
D709
1SS355
D710
1SS355
D711
1SS355
D712
1SS355
D713
1SS355
D714
1SS355
D715
1SS355
D716
1SS355
D717
1SS355
D718
1SS355
D719
1SS355
D720
1SS355
D721
1SS355

# SCHEMATIC DIAGRAMS (15/20)

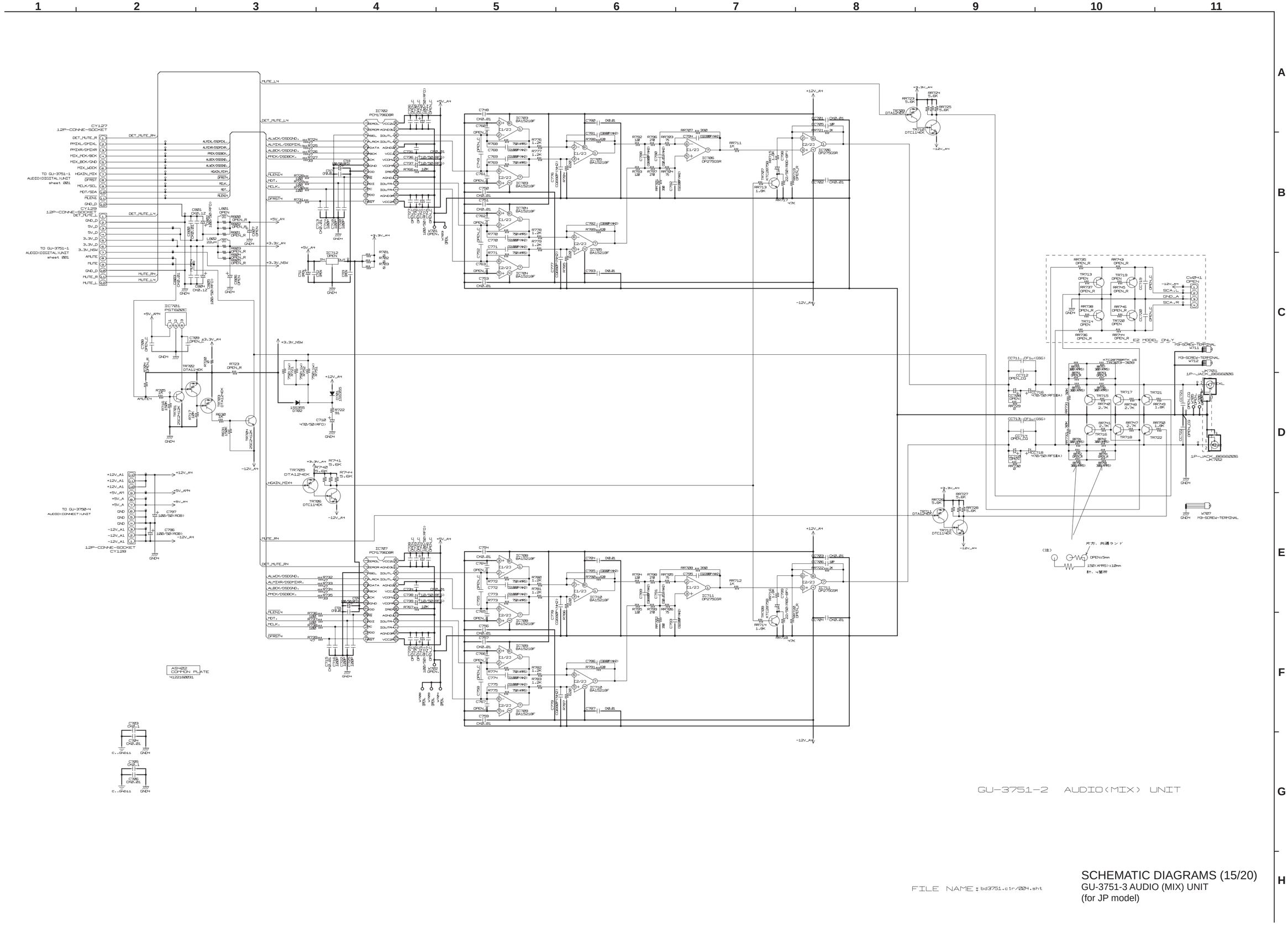

## SCHEMATIC DIAGRAMS (16/20)

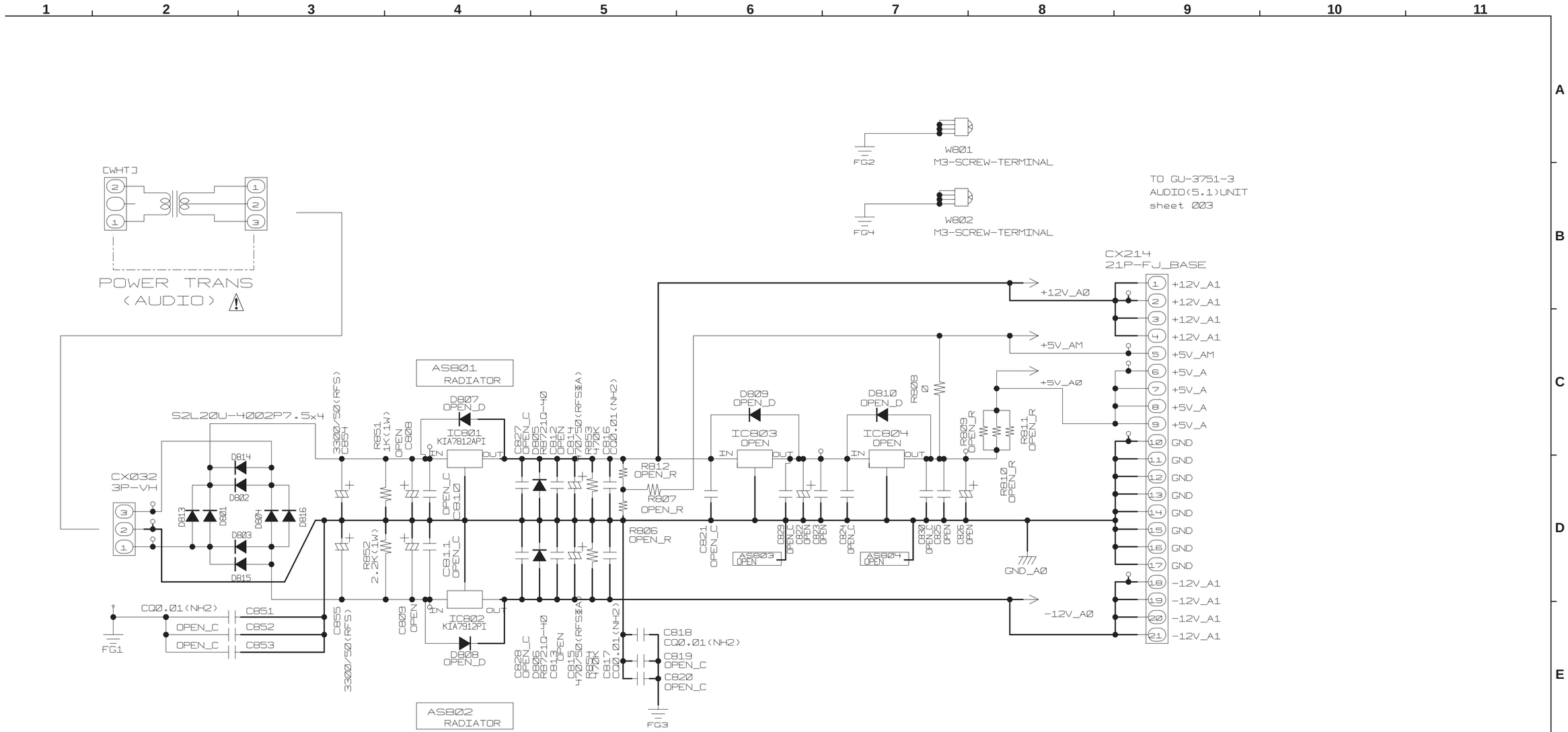


| | DVD3939E3/E2 | | DVD3930JP | |
|---|---|---|---|---|
| C822 | OPEN | - | 00D2544693939 | CE04W1H101MT(RF0) |
| C823 | OPEN | - | 00D2554256955 | CQ93P2A103JT(NH2) |
| C825 | OPEN | - | 00D2554256955 | CQ93P2A103JT(NH2) |
| C826 | OPEN | - | 00D2544750704 | CE04W1H471MC(RFO) |
| IC803 | OPEN | - | 00D2631100050 | KIA7808API |
| IC804 | OPEN | - | 00D2631100005 | KIA7805API |
| R809 | OPEN | - | 00D2472018903 | RM73B--0R0KT +1608 |
| R810 | OPEN | - | 00D2472018903 | RM73B--0R0KT +1608 |
| R811 | OPEN | - | 00D2472018903 | RM73B--0R0KT +1608 |
| AS803 | OPEN | - | 00D4170476010 | RADIATOR |
| AS804 | OPEN | - | 00D4170476010 | RADIATOR |

AS910
COMMON PLATE
4122160031

GU-3751-4 AUDIO(POWER)UNIT

FILE NAME: bd3751.cir/005.sht

SCHEMATIC DIAGRAMS (16/20)
GU-3751-5 AUDIO (POWER) UNIT

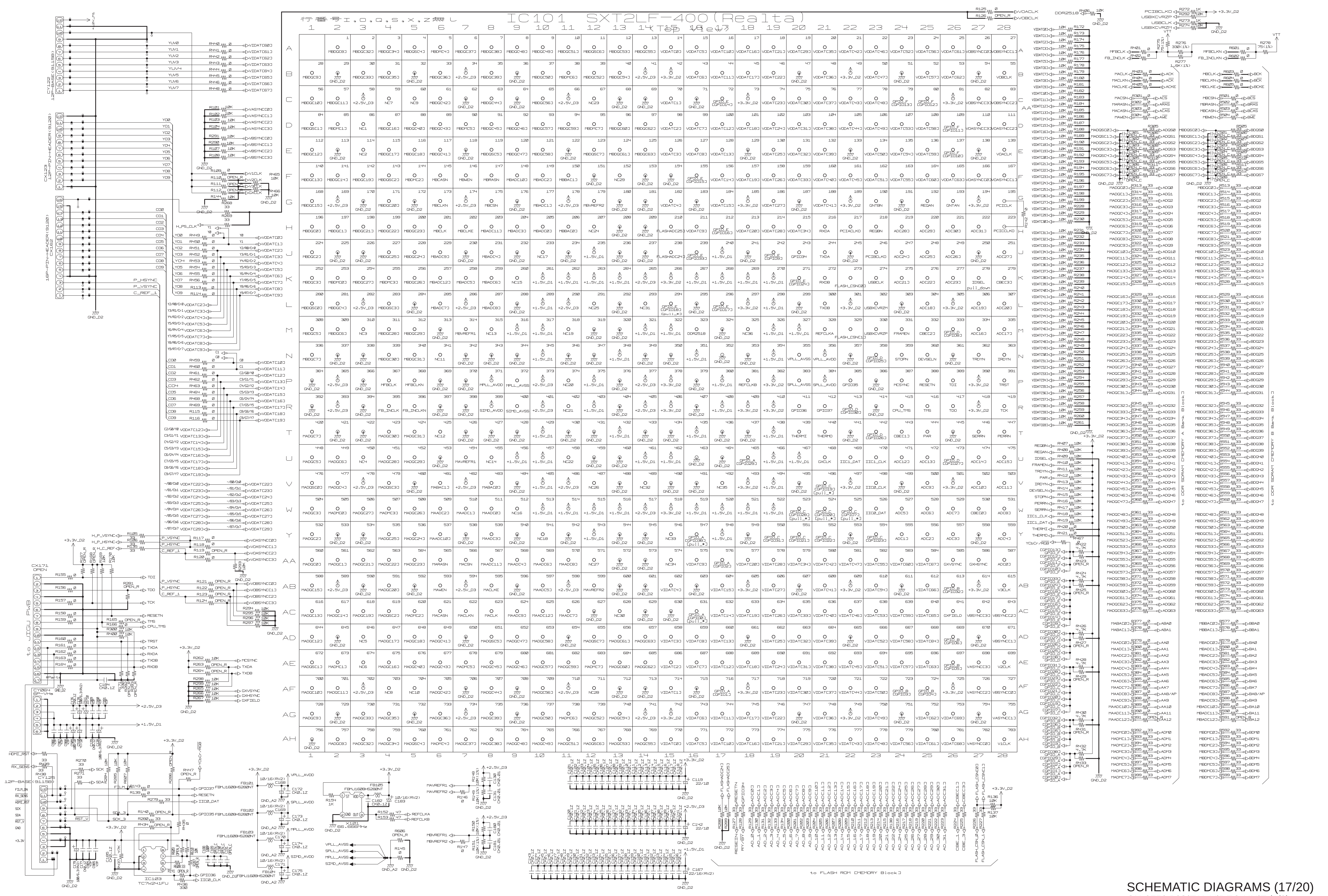


## SCHEMATIC DIAGRAMS (17/20)

GU-3752 DIGITAL VIDEO UNIT (1/3)

## SCHEMATIC DIAGRAMS (18/20)

# GU-3752 (2/3)
# DIGITAL VIDEO UNIT
# [MEMORY Block]

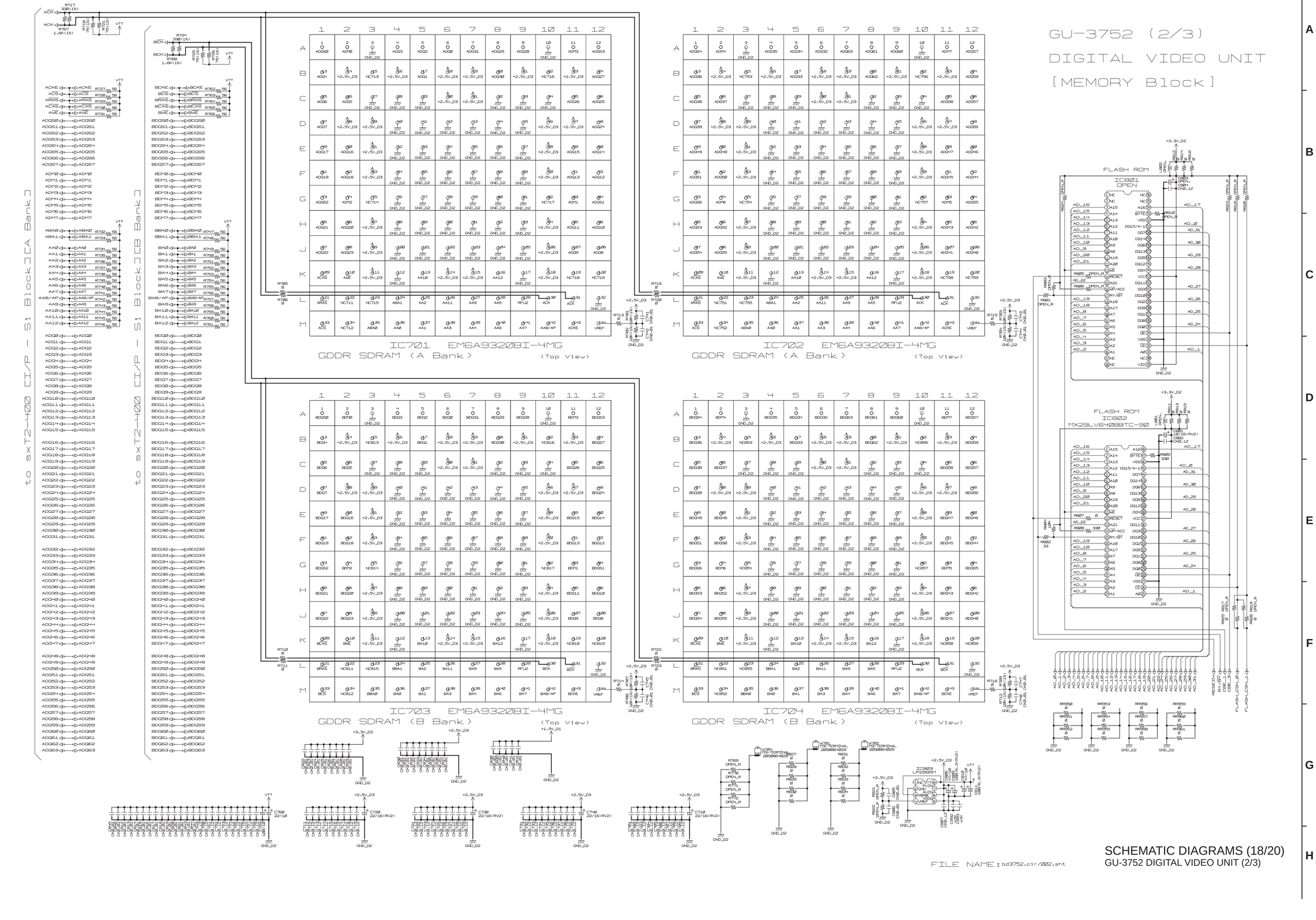


FILE NAME : bd3752.cir/002.sht

SCHEMATIC DIAGRAMS (18/20)
GU-3752 DIGITAL VIDEO UNIT (2/3)

## SCHEMATIC DIAGRAMS (19/20)

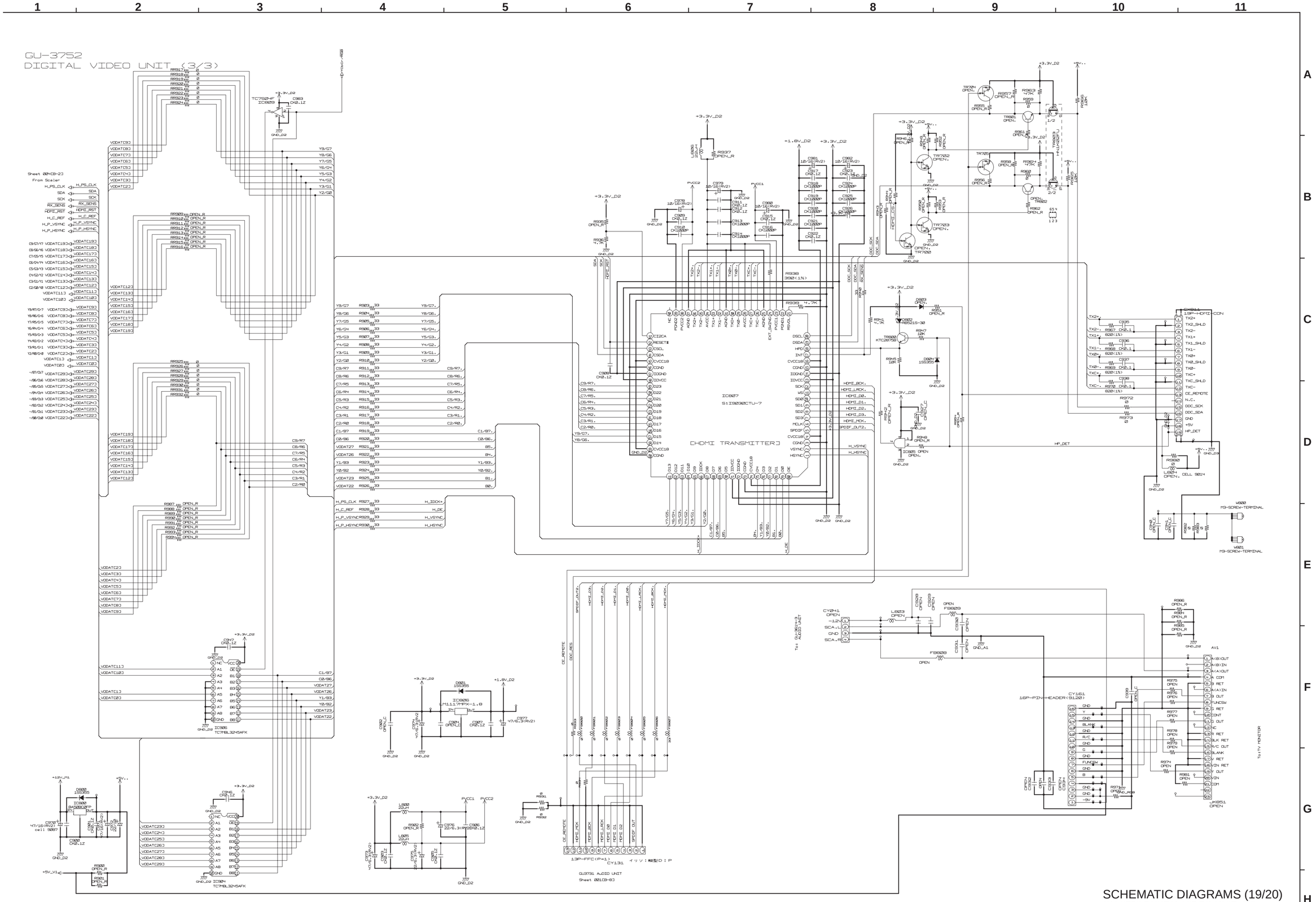


SCHEMATIC DIAGRAMS (19/20)
GU-3752 DIGITAL VIDEO UNIT (3/3)
(for E3, JP model)

## SCHEMATIC DIAGRAMS (20/20)

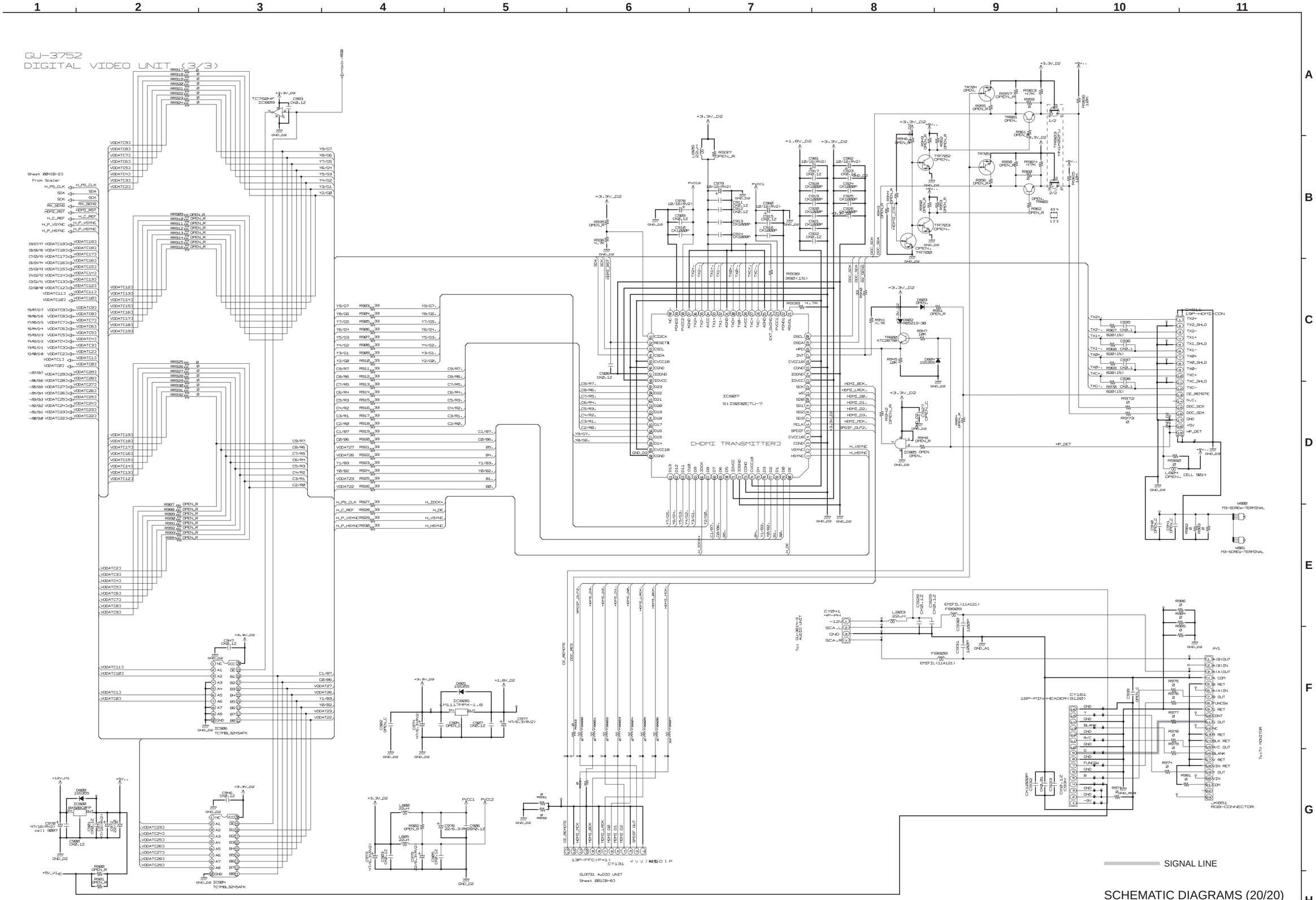


SCHEMATIC DIAGRAMS (20/20)
GU-3752 DIGITAL VIDEO UNIT (3/3)
(for E2 model)

# PRINTING THE SERVICE MANUAL

The PDF of this service manual is not designed to be printed from cover to cover. The pages vary in size, and must therefore be printed in sections based on page dimensions.

## NON-SCHEMATIC PAGES

Data that does NOT INCLUDE schematic diagrams are formatted to 8.5 x 11 inches and can be printed on standard letter-size and/or A4-sized paper.

## SCHEMATIC DIAGRAMS

The schematic diagram pages are provided in two ways, full size and tiled. The full-sized schematic diagrams are formatted on paper sizes between 8.5" x 11" and 18" x 30" depending upon each individual diagram size. Those diagrams that are LARGER than 11" x 17" in full-size mode have been tiled for your convience and can be printed on standard 11" x 17" (tabloid-size) paper, and reassembled.

### TO PRINT FULL SIZE SCHEMATIC DIAGRAMS

If you have access to a large paper plotter or printer capable of outputting the full-sized diagrams, output as follows:

1) Note the page size(s) of the schematics you want to output as indicated in the middle window at the bottom of the viewing screen.

2) Go to the File menu and select Print Set-up. Choose the printer name and driver for your large format printer. Confirm that the printer settings are set to output the indicated page size or larger.

3) Close the Print Set Up screen and return to the File menu. Select "Print..." Input the page number of the schematic(s) you want to print in the print range window. Choose OK.

### TO PRINT TILED VERSION OF SCHEMATICS

Schematic pages that are larger than 11" x 17" full-size are provided in a 11" x 17" printable tiled format near the end of the document. These can be printed to tabloid-sized paper and assembled to full-size for easy viewing.

If you have access to a printer capable of outputting the tabloid size (11" x 17") paper, then output the tiled version of the diagram as follows:

1) Note the page number(s) of the schematics you want to output as indicated in the middle window at the bottom of the viewing screen.

2) Go to the File menu and select Print Set-up. Choose the printer name and driver for your printer. Confirm that the plotter settings are set to output 11" x 17", or tabloid size paper in landscape (  ) mode.

3) Close the Print Set Up screen and return to the File menu. Select "Print..." Input the page number of the schematic(s) you want to print in the print range window. Choose OK.

### TO PRINT SPECIFIC SECTIONS OF A SCHEMATIC

To print just a particular section of a PDF, rather than a full page, access the Graphics Select tool in the Acrobat Reader tool bar.

1) To view the Graphics Select Tool, press and HOLD the mouse button over the Text Select Tool which looks like: 
This tool will expand to reveal to additional tools.
Choose the Graphics Select tool by placing the cursor over the button on of the far right that looks like: 

2) After selecting the Graphics Select Tool, place your cursor in the document window and the cursor will change to a plus (+) symbol. Click and drag the cursor over the area you want to print. When you release the mouse button, a marquee (or dotted lined box) will be displayed outlining the area you selected.

3) With the marquee in place, go to the file menu and select the "Print..." option. When the print window appears, choose the option under the section called "Print Range" which says "Selected Graphic".

Select OK and the output will print only the area that you outlined with the marquee. 

(continued >)