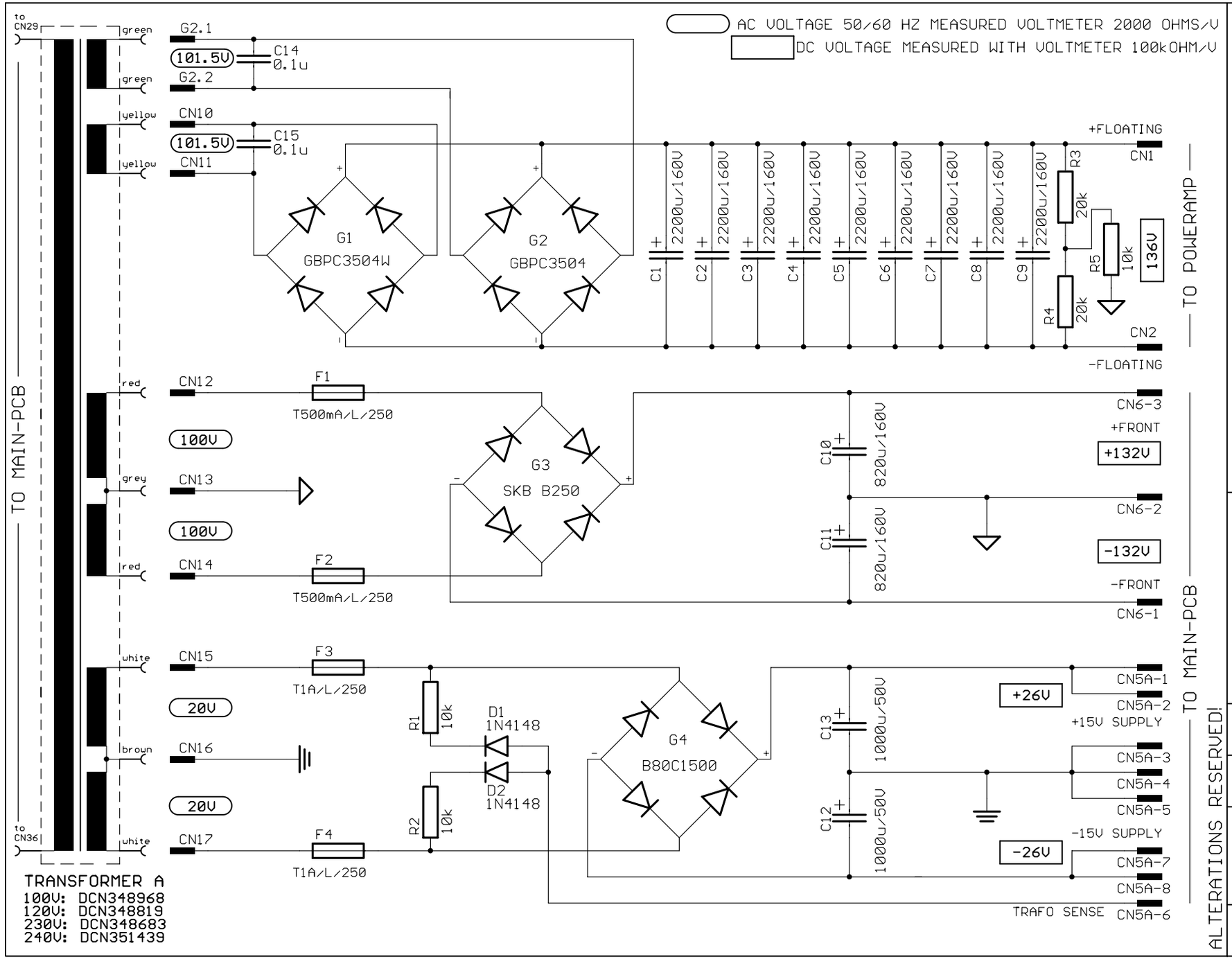

ALTERATIONS RESERVED!

Last modified: 21.09.2000 11:59:12
Last plotted: 21.09.2000 11:59:13

	NAME	DATE
DSG'D		
CHK'D	J. Taffner	3.3.95
APP'D	Brandl M.	

SYMB.	REVISION	DATE	NAME
A		9.6.94	Brandl

85242A NETA

CIRCUIT DIAGRAM

348676

CPS4

DYNACORD

4-