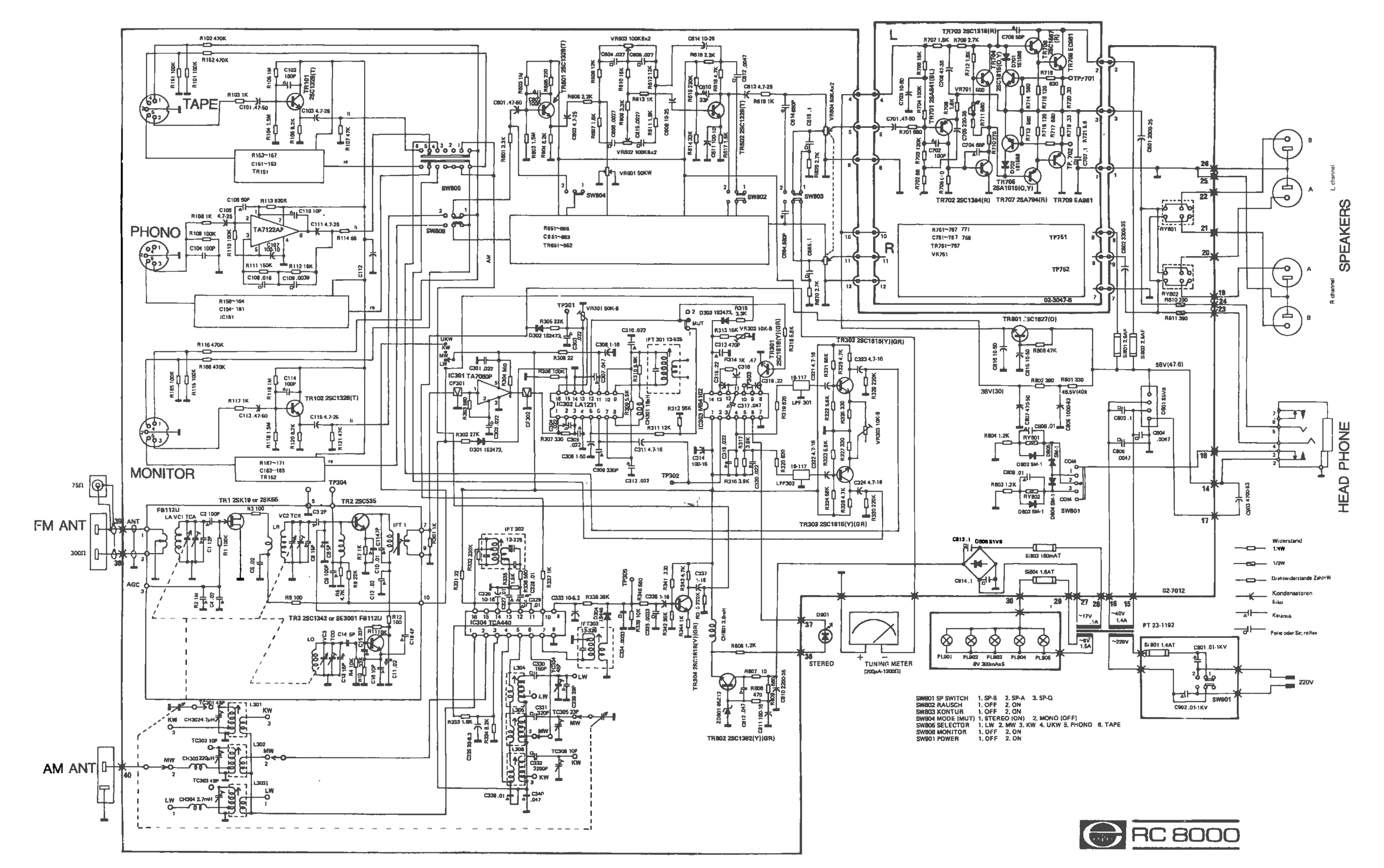
TAPE
PHONO
MONITOR
FM ANT
AM ANT
75Ω
300Ω
SPEAKERS
L channel
R channel
HEAD PHONE
STEREO
TUNING METER
220V
SW801 SP SWITCH 1. SP-B 2. SP-A 3. SP-Q
SW802 RAUSCH 1. OFF 2. ON
SW803 KONTUR 1. OFF 2. ON
SW804 MODE (MUT) 1. STEREO (ON) 2. MONO (OFF)
SW805 SELECTOR 1. LW 2. MW 3. KW 4. UKW 5. PHONO 6. TAPE
SW806 MONITOR 1. OFF 2. ON
SW901 POWER 1. OFF 2. ON
Widerstand 1/4W
1/2W
Drahtwiderstände Zahl+W
Kondensatoren
Elko
Keramik
Folie oder Sc; rolfex
RC 8000