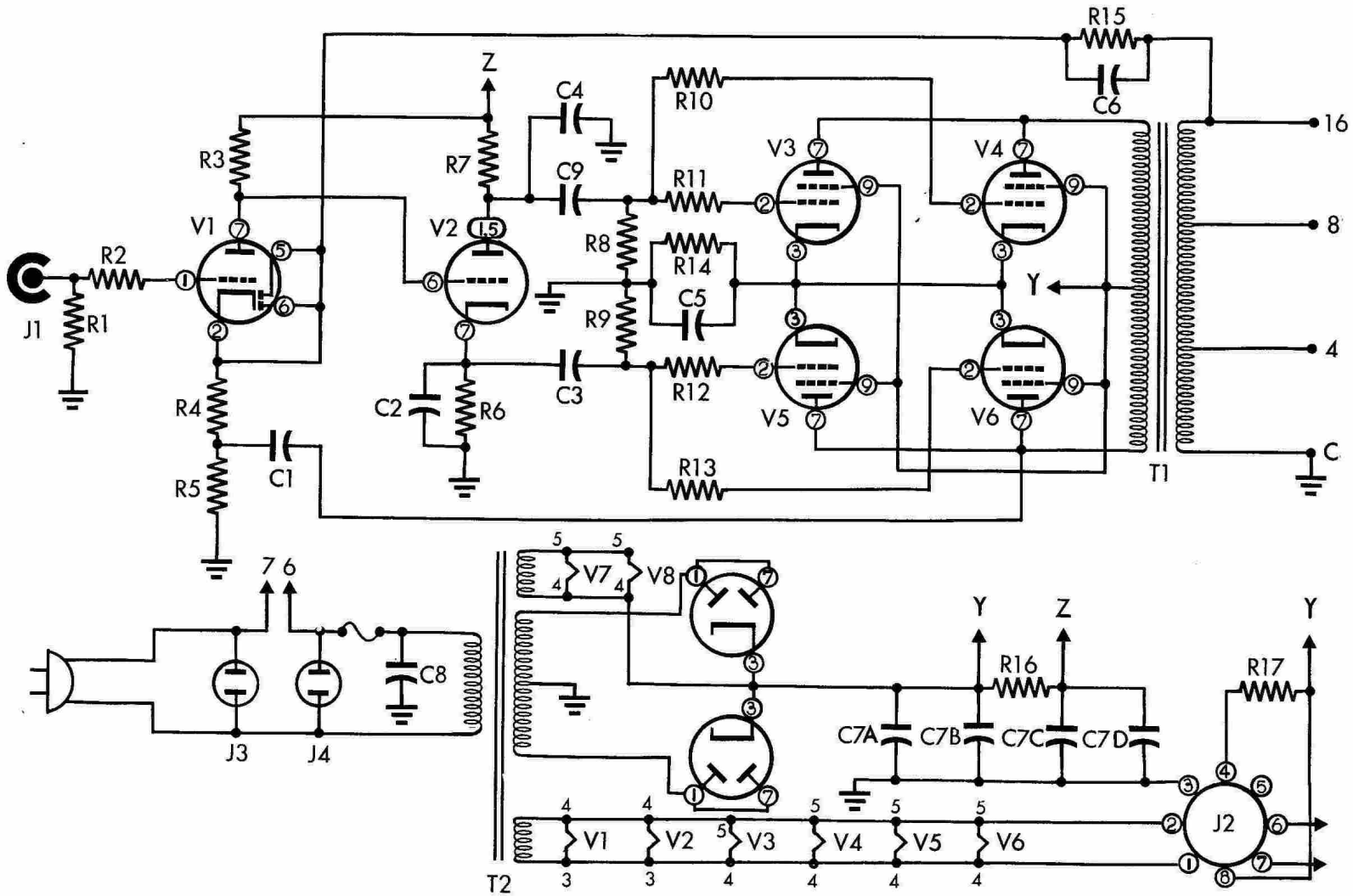

Sym.	Description	Sym.	Description	Sym.	Description	Sym.	Description	Sym.	Description	Sym.	Description
C1	cap., disc., 47 mmf, 10%	C8	cap., molded, .03 mfd-600 V	R1	res., 470KΩ, 1/2W, ±10%	R8	res., 330KΩ, 1/2W, ±10%	R15	res., 33KΩ, 1/2W, ± 5%	V3	tube, EL84
C2	cap., disc., 125 mmf, 10%	C9	cap., molded, .1 mfd-400 V, 10%	R2	res., 10KΩ, 1/2W, ±10%	R9	res., 330KΩ, 1/2W, ±10%	R16	res., 33KΩ, 1W, ±10%	V4	tube, EL84
C3	cap., molded, .1 mfd-400 V, 10%	F1	fuse, 2A	R3	res., 330KΩ, 1/2W, ±10%	R10	res., 1KΩ, 1/2W, ±10%	R17	res., 680Ω, 1/2W, ±10%	V5	tube, EL84
C4	cap., disc., 125 mmf, 10%	J1	jack, phono-input type	R4	res., 1.6KΩ, 1/2W, ± 5%	R11	res., 1KΩ, 1/2W, ±10%	T1	transformer, audio output	V6	tube, EL84
C5	cap., elec., 300 mfd-25 V	J2	jack (octal socket), preamp power	R5	res., 47Ω, 1/2W, ± 5%	R12	res., 1KΩ, 1/2W, ±10%	T2	transformer, power	V7	tube, EZ81
C6	cap., disc., 56 mmf, 10%	J3	outlet, convenience	R6	res., 82KΩ, 1/2W, ± 5%	R13	res., 1KΩ, 1/2W, ±10%	V1	tube, 6AV6	V8	tube, EZ81
C7	cap., elec., 2X 20 mfd-450 V, 2X 10 mfd-350 V	J4	outlet, convenience	R7	res., 82KΩ, 1/2W, ± 5%	R14	res., 80Ω, 5W, ± 5%	V2	tube, 6C4		

EICO

EICO

MODEL HF-30

30 WATT HIGH FIDELITY AMPLIFIER