The *Electrohome* "PA-100 MK. I" Hi-Fi Power Amplifier

For Operation on 110-120 Volts A.C. 25-60 Cycle Output Terminals Connected for 15 ohms

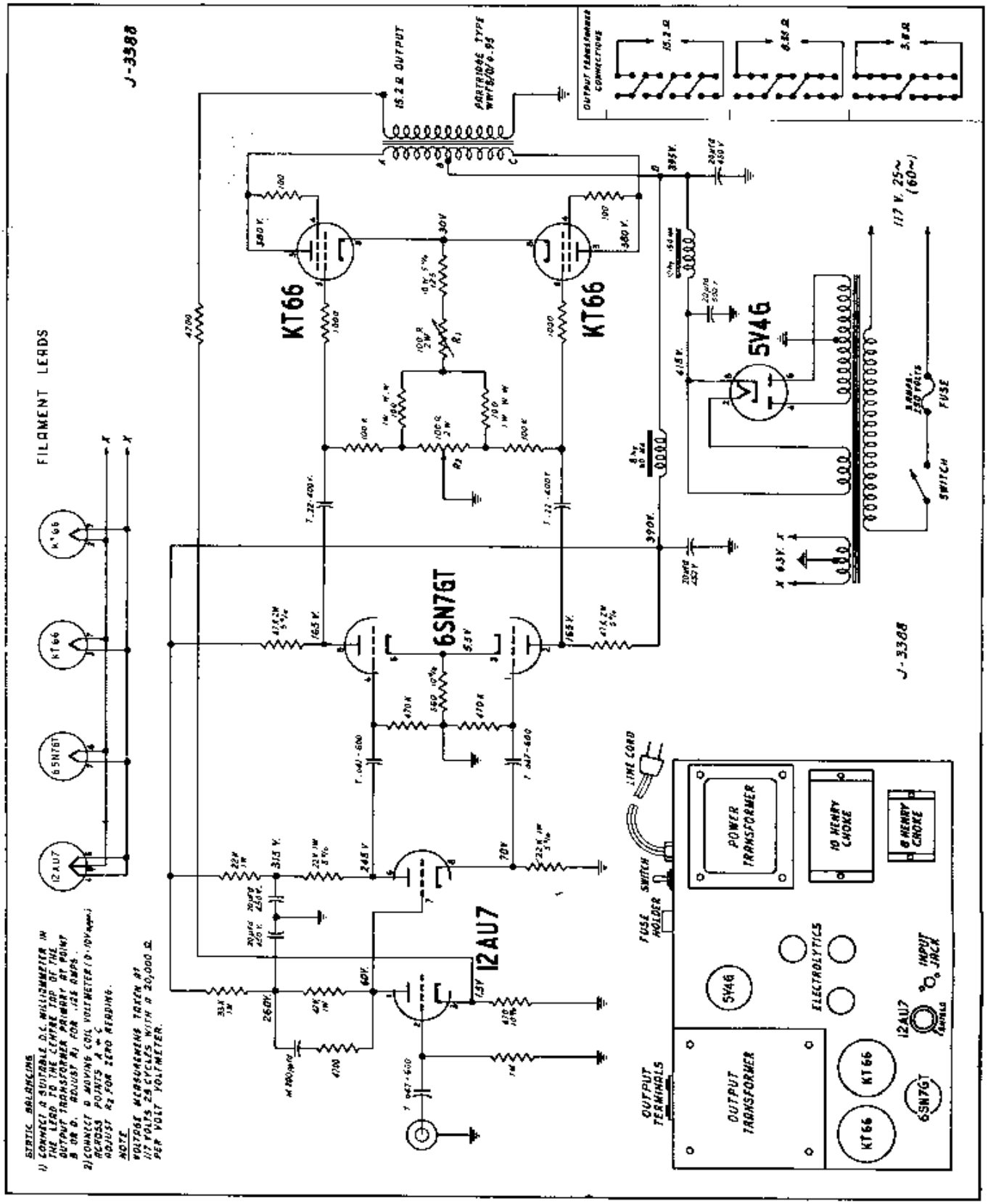

Manufactured by Dominion *Electrohome* Industries Limited - Kitchener, Ontario, Canada

J-3390R 180-D.P.-27