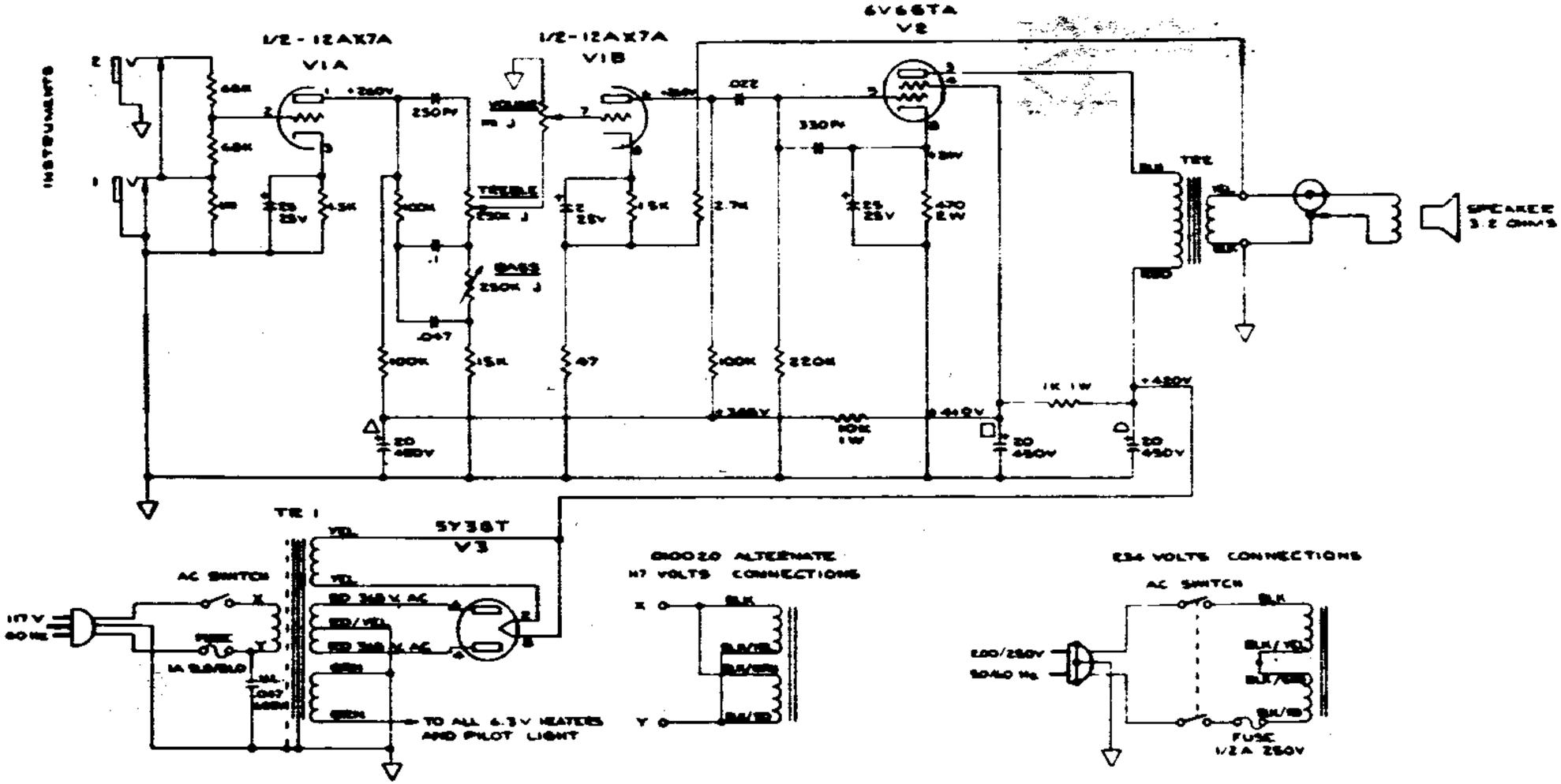

TR1 - 060020	117/234V
TR1 - 062772	125P18
TR2 - 062905	125A35A

FENDER MUSICAL INSTRUMENTS

CBS MUSICAL INSTRUMENTS

A DIVISION OF COLUMBIA BROADCASTING SYSTEMS INC

FULLERTON CALIFORNIA

U S A

1. ALL CAPACITORS ARE IN µf/ 600 V
2. ALL RESISTORS ARE ±10% 1/2 W
3. VOLTAGES READ TO GROUND WITH ELECTRONIC VOLTMETER VALUES SHOWN ± 20%

CBS

SCHEMATIC

CHAMP - AMP

(DOMESTIC & EXPORT)

D 045393 C