FENDER MODEL "DELUXE REVERB-AMP SCHEMATIC

THIS PRODUCT MANUFACTURED UNDER ONE OR MORE OF THE FOLLOWING U.S. PATENTS
CIRCUIT PATENT #2817708, #2973681
DESIGN PATENT #192859

NOTICE

1. - VOLTAGES READ TO GROUND WITH ELECTRONIC VOLTMETER VALUES SHOWN + OR - 10%
2. - ALL RESISTORS ½ WATT 10% TOLERANCE IF NOT SPECIFIED
3. - ALL CAPACITORS AT LEAST 400 VOLT RATING IF NOT SPECIFIED
4. 010873 USED IN SOME VERSIONS

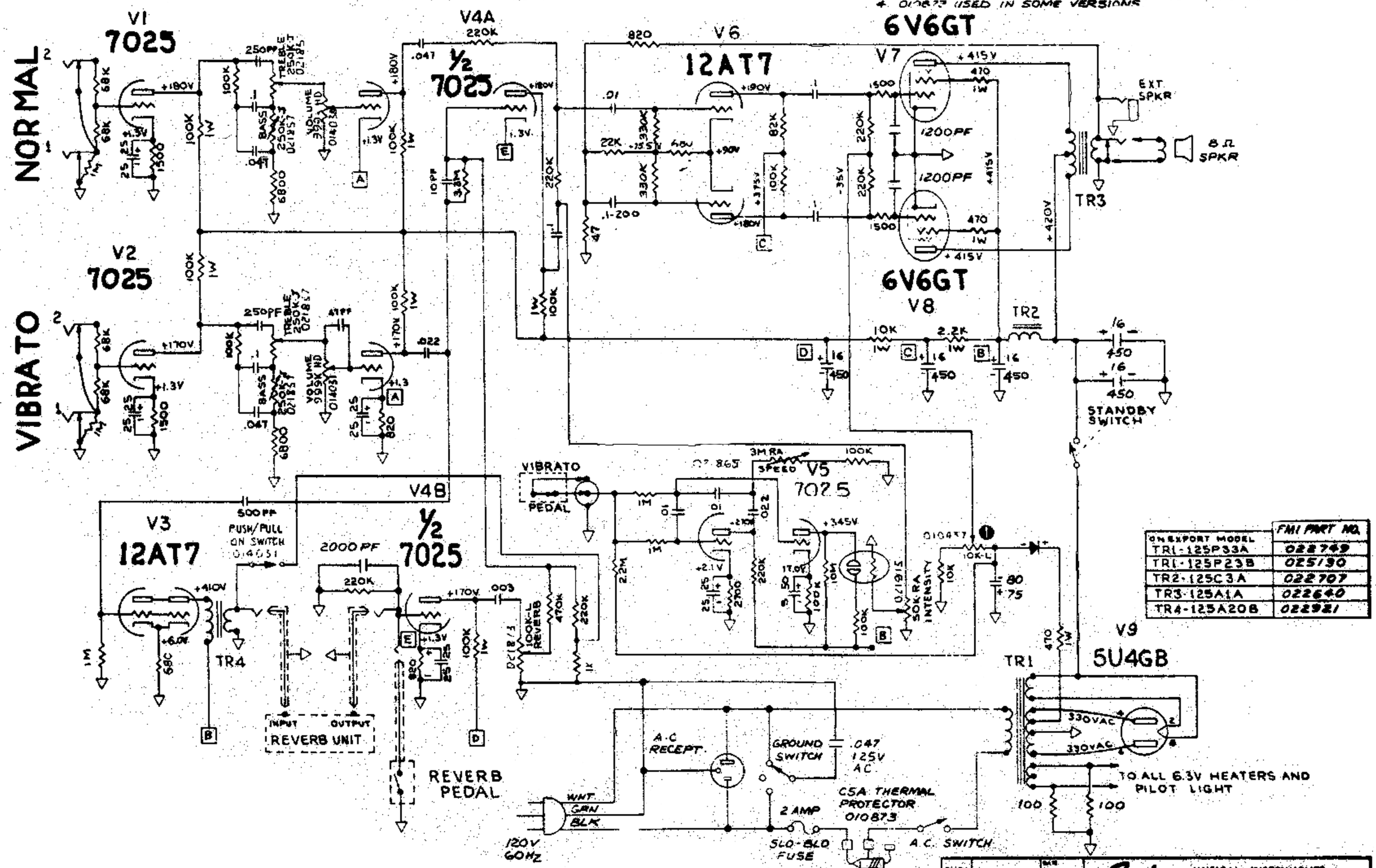

ON EXPORT MODEL	FMI PART NO.
TR1-125P33A	022749
TR1-125P23B	025130
TR2-125C3A	022707
TR3-125A1A	022640
TR4-125A20B	022921

DWN.	RON ECO	DATE 10.6.77
CHK.		DATE
APPD.		DATE
APPD.		DATE
APPD.		DATE 10/6/77
APPROVAL —		
APPROVAL —		

Fender MUSICAL INSTRUMENTS SANTA ANA, CALIFORNIA

DWG. TITLE
SCHEMATIC & WIRING DIAGRAM DELUXE REV-AMP W/ VOLUME BOOST

REL. NO.	SIZE	DWG. NO.	REV.
10/6-7	C	014641	—

SCALE | MODEL DELUXE REV-AMP | SHEET 1 OF 1