Stereophonic

THE FISHER X-101-B

SERVICE MANUAL

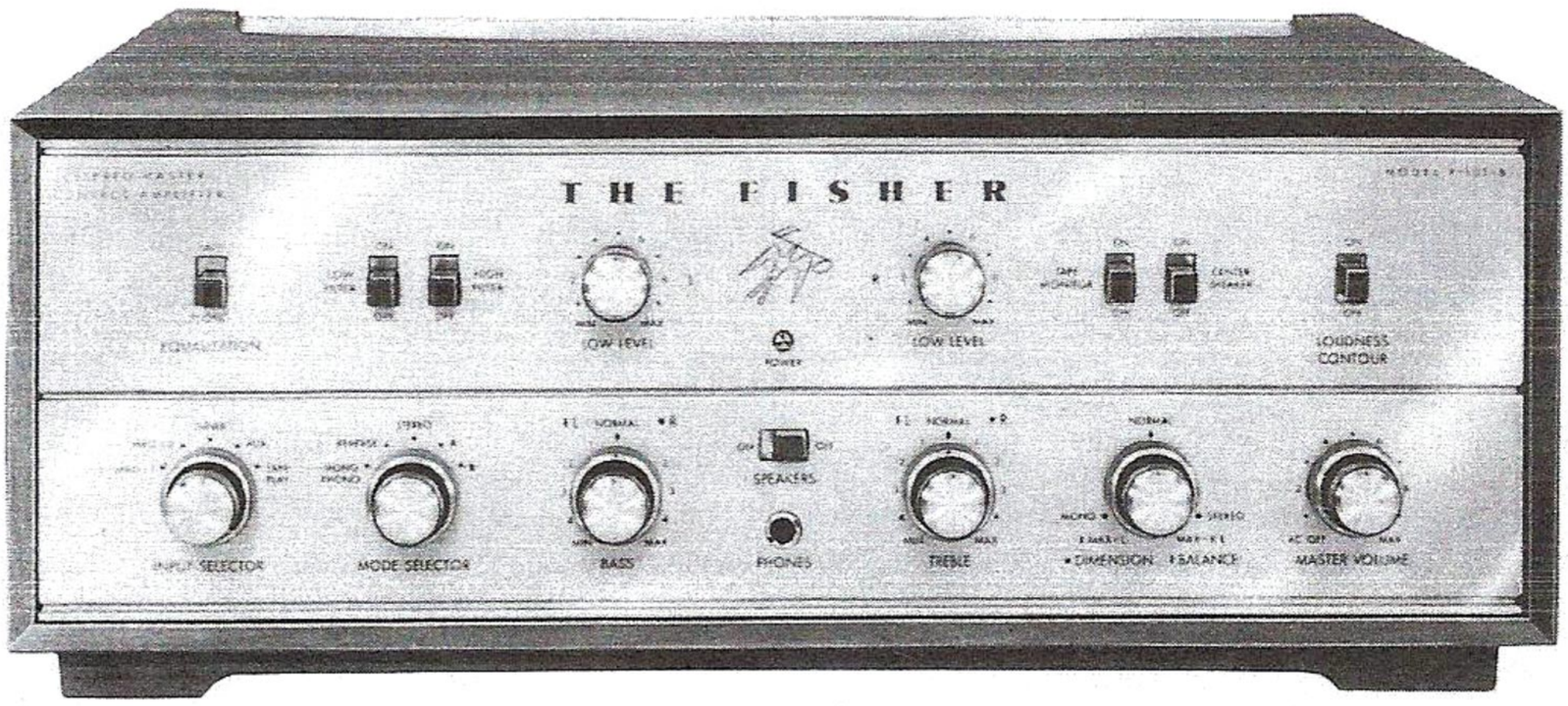

MODEL X101-B

CHASSIS SERIAL NUMBERS
FROM 70001 TO 79999 INCLUSIVE

FISHER RADIO CORPORATION · NEW YORK

THE FISHER X-101-B CHASSIS SERIAL NUMBERS FROM 70001 TO 79999 INCLUSIVE

www.hifiengine.com

PARTS DESCRIPTION LIST

CAPACITORS

10 % tolerance for all fixed capacitors, unless otherwise noted or marked. GMV (Guaranteed minimum value).

Symbol	Description	Part No.
C1, 2	Ceramic, 330uuf, 1000V	C50072-1
C3, 4	Ceramic, .01uf, 20 %, 500V	C50089-3
C5, 6	Ceramic, .02uf, 20 %, 500V	C50089-5
C7, 8	Ceramic, 18uuf, 5 %, N150, 1000V	C50070-30
C9, 10	Ceramic, 82uuf, N1500, 1000V	C50070-7
C11, 12	Ceramic, 1000uuf, 1000V	C50072-3
C13, 14	Mylar, .033uf, 250V	C50197-51
C15, 16	Ceramic, 1500uuf, 1000V	C50072-10
C17	Electrolytic, 2 Section	C50180-34
	A — 60uf, 500V	
	B — 40uf, 450V	
C18	Electrolytic, 3 Section	C50180-14
	A — 40uf, 450V	
	B — 40uf, 450V	
	C — 100uf, 150V	
C19	Electrolytic, 20uf, 350V	C692-131
C20, 21	Mylar, .033uf, 250V	C50197-51
C22, 23	Ceramic, 68uuf, N220, 1000V	C50070-12
C24, 25	Mylar, .022uf, 250V	C50197-49
C28, 29	Ceramic, 68uuf, N220, 1000V	C50070-12
C30, 31	Ceramic, 680uuf, 1000V	C50072-2
C32, 33	Mylar, .047uf, 400V	C50197-30
C34, 35	Mylar, .047uf, 250V	C50197-52
C36, 37	Ceramic, 21uuf, N750, 1000V	C50070-32
C38, 39	Ceramic, 560uuf, 1000V	C50072-14

RESISTORS AND POTENTIOMETERS

In ohms, 10 % tolerance, ½ watt, unless otherwise noted. K=Kilohm, M=Megohm.

Symbol	Description	Part No.
R1, 2	Dep. Carbon, 100K, 5 %, ⅓ W	R33DC104J
R3, 4	Dep. Carbon, 120K, 5 %, ⅓ W	R33DC124J
R5, 6	Dep. Carbon, 270K, 5 %, ⅓ W	R33DC274J
R7, 8, 9, 10	Dep. Carbon, 100K, 5 %, ⅓ W	R33DC104J
R11, 12	Dep. Carbon, 10K, 5 %, ⅓ W	R33DC103J
R13, 14	Glass, 330K, 5 %, 1W	R30G334J
R15, 16	Composition, 4.7M	RC20BF475K
R17, 18	Glass, 2.7K, 5 %, 1W	R30G272J
R19, 20	Dep. Carbon, 220K, 5 %, ⅓ W	R33DC224J
R21, 22	Potentiometer, 250K, Phono Level	R50160-98
R23, 24	Dep. Carbon, 100K, 5 %, ⅓ W	R33DC104J
R25, 26	Composition, 10M	RC20BF106K
R27, 28	Composition, 560K, 5 %	RC20BF564J
R29, 30	Dep. Carbon, 120K, 5 %, ⅓ W	R33DC124J
R31, 32	Composition, 1.5M	RC20BF155K
R33, 34	Composition, 220K, 1W	RC30BF224K
R35, 36	Composition, 2.2M	RC20BF225K
R37, 38	Dep. Carbon, 470, 5 %, ⅓ W	R330DC471J
R39, 40	Dep. Carbon, 100K, 5 %, ⅓ W	R33DC104J
R41, 42	Composition, 180K	RC20BF184K
R43, 44	Glass, 125, 7W	RPG7W125K
R45	Glass, 1.5K, 3W	RPG3W152K
R46, 47	Composition, 39K	R120BF393K
R48	Composition, 3.3K, 2W	RC40BF332K
R49	Potentiometer, 1M, Treble	R50160-93
R50	Potentiometer, 1M, Bass	R50160-93
R51	Composition, 2.7K	RC30BF272K
R52, 53	Composition, 100K, 5 %, 1W	RC30BF104J
R54	Composition, 100K	RC20BF104K
R55, 56	Composition, 220	RC20BF221K
R57, 58	Dep. Carbon, 100K, 5 %, ⅓ W	R33DC104J
R59, 60	Dep. Carbon, 270K, 5 %, ⅓ W	R33DC271J
R61, 62	Dep. Carbon, 22K, 5 %, ⅓ W	R33DC223J
R63	Potentiometer, 500K, Volume	R50160-92
R64	Potentiometer, Dual, 250K, Bal, 1M, Blend	R50160-91
R65, 66	Dep. Carbon, 47K, 5 %, ⅓ W	R33DC473J
R67, 68	Composition, 560K	RC20BF564K
R69, 70	Compositioi, 2.2K; 5 %	RC20BF222J
R71, 72	Composition, 220	RC20BF221K
R73, 74	Dep. Carbon, 22K, 5 %, ⅓ W	R33DC223J
R75, 76	Composition, 1.8K, 5 %	RC20BF182J
R77, 78	Dep. Carbon, 330K, 5 %, ⅓ W	R33DC334J
R79, 80	Dep. Carbon, 47K, 5 %, ⅓ W	R33DC473J
R81, 82	Composition, 27K	RC20BF273K
R83, 84	Potentiometer, 50K, A.C. Balance	R50103-3
R85, 86, 87, 88	Dep. Carbon, 330K, 5 %, ⅓ W	R33DC334J
R89	Glass, 920, 10W	RPG10W921K
R90, 91, 92, 93	Composition, 1K	RC20BF102K
R94	Composition, 1.8K	RC20BF182K
R95	Potentiometer, 5K, Bias	R50103-4
R96	Dep. Carbon, 10K, 5 %, ⅓ W	R33DC103J
R97	Composition, 1K	RC20BF102K
R98, 99	Composition, 4.7K	RC20BF472K
R100, 101	Dep. Carbon, 82K,	RC20BF823K
R102, 103	Glass, 24, 7W	RPG7W240K
R104, 105	Comp., 330, 1W	RC30BF331K

MISCELLANEOUS

Symbol	Description	Part No.
F1	Fuse, 3.2 Amp., Slo-Blo	F3319
I1	Bulb, #47	I50009-1
PC1, 2	Printed Circuit	PC50187-3
PC3, 4	Printed Circuit, High Filter	PC50187-2
PC5, 6	Printed Circuit, Tone Control	PC50187-4
S1	Switch, Selector	S849-117
S2	Switch, Mode Selector	S849-120
S3	Switch, Power	Part of R63
S4, 5, 6, 7, 8, 9, 11	Switch, Slide	S50200-5
S10	Switch, Slide	S50200-2
T1	Transformer, Power	T849-115
T2	Transformer, Output	T849-116-2
T3	Transformer, Output	T849-116-1
——	Tube Shield	E3287
——	Knob, Dual, Front	E50323
——	Knob, Dual, Rear	E50221
——	Knob, Dummy, Dual	E50324
——	Plastic Leg	H50277
——	Jewel	I50162-4
——	Fuse Holder	X563-151

www.hifiengine.com

SCHEMATIC DIAGRAM

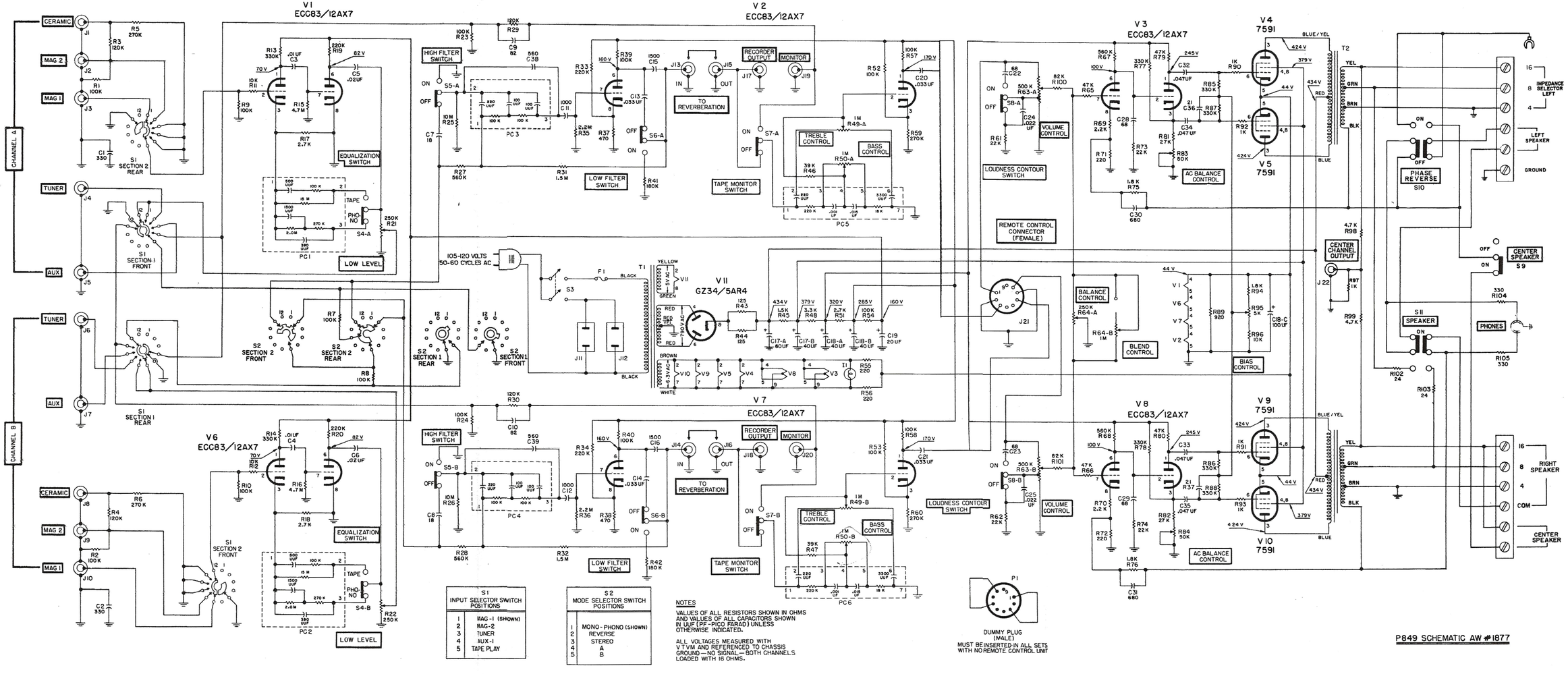

S1 INPUT SELECTOR SWITCH POSITIONS	
1	MAG-1 (SHOWN)
2	MAG-2
3	TUNER
4	AUX-1
5	TAPE PLAY

S2 MODE SELECTOR SWITCH POSITIONS	
1	MONO-PHONO (SHOWN)
2	REVERSE
3	STEREO
4	A
5	B

NOTES

VALUES OF ALL RESISTORS SHOWN IN OHMS AND VALUES OF ALL CAPACITORS SHOWN IN UUF (PF-PICO FARAD) UNLESS OTHERWISE INDICATED.

ALL VOLTAGES MEASURED WITH VTVM AND REFERENCED TO CHASSIS GROUND — NO SIGNAL — BOTH CHANNELS LOADED WITH 16 OHMS.

P849 SCHEMATIC AW #1877

| | | |

TUBE LAYOUT

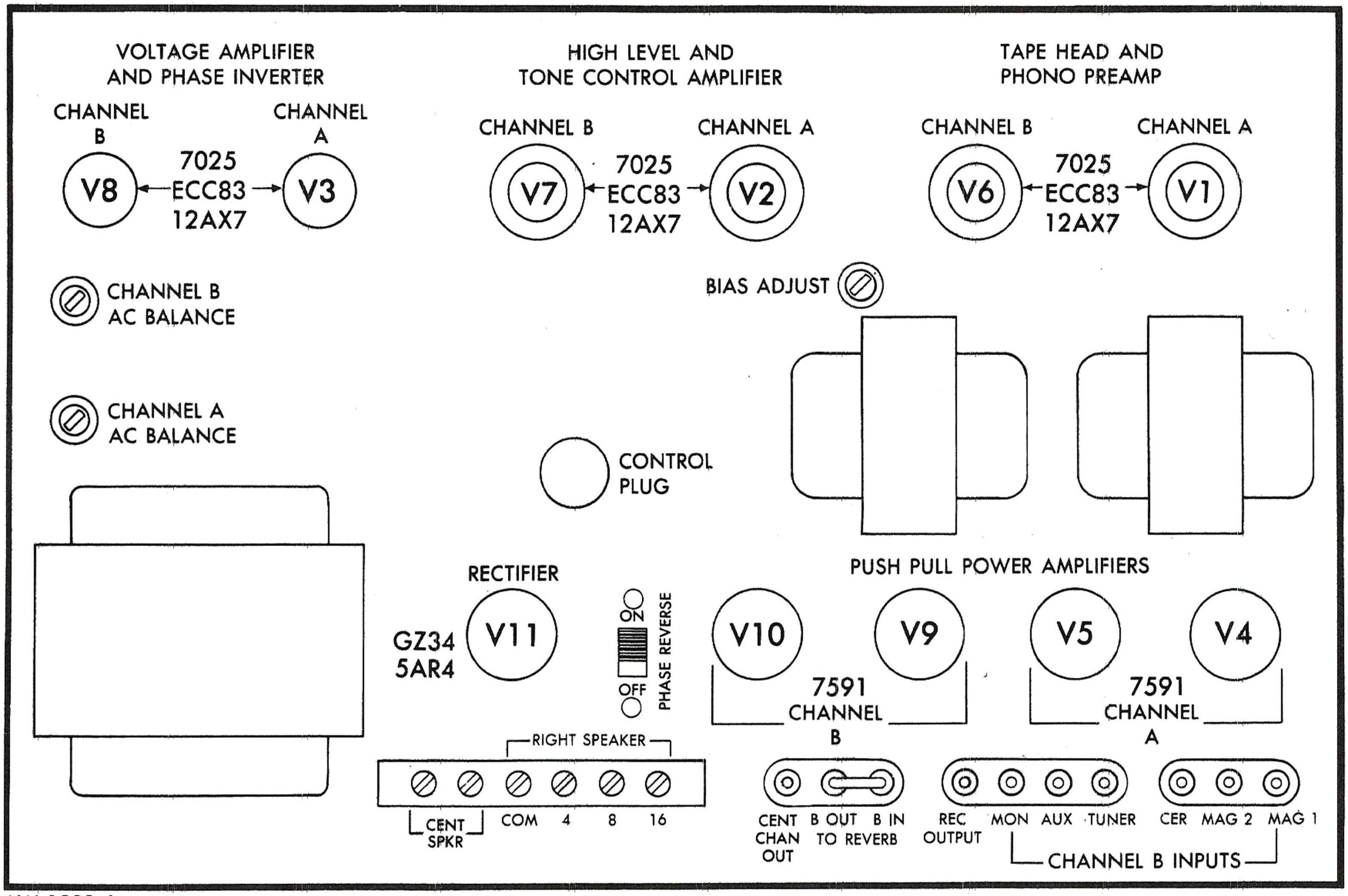

AW 1898 A

ADJUSTMENTS

1—OUTPUT TUBE BIAS ADJUSTMENT

a. Set Volume control to minimum.

b. Connect DC VTVM to Pin 5 of any output tube (7591).

c. Adjust the BIAS ADJUST for a reading of +44 volts.

2—AC BALANCE ADJUSTMENT

Channel A

a. Connect 4 ohm load across the left speaker output terminals.

b. Connect Impedance Selector lead (protruding from rear of chassis) to 4 ohm tap on left speaker terminal strip.

c. Connect IM Distortion Analyzer output to the AUX input for Channel A.

d. Connect the Analyzer input ground lead to GND lug.

e. Connect the hot lead from the analyzer input to the left speaker lug next to the ground lug.

f. Set the INPUT SELECTOR switch to AUX, the MODE SELECTOR switch to STEREO and adjust the analyzer output until 7.35 volts are indicated across the output load.

g. Adjust CHANNEL A AC BALANCE for minimum IM distortion.

Channel B

a. Connect 4 ohm load between the COM and 4 ohm lugs of the right speaker terminal strip.

b. Connect IM Distortion Analyzer output to the AUX input for Channel B.

c. Connect the Analyzer input ground lead to the terminal lug marked 4 on the right speaker terminal strip.

d. The hot lead from the analyzer input should be connected to the terminal lug marked COM on the right speaker terminal strip.

e. Set the INPUT SELECTOR switch to AUX, the MODE SELECTOR switch to STEREO and adjust analyzer output until 7.35 volts are indicated across the output load.

f. Adjust the CHANNEL B AC BALANCE control for minimum IM distortion.

www.hifiengine.com

FISHER RADIO CORPORATION · NEW YORK

N849-104AX

PRINTED IN U.S.A.

ENTIRE CONTENTS COPYRIGHT 1961 FISHER RADIO CORPORATION

www.hifiengine.com