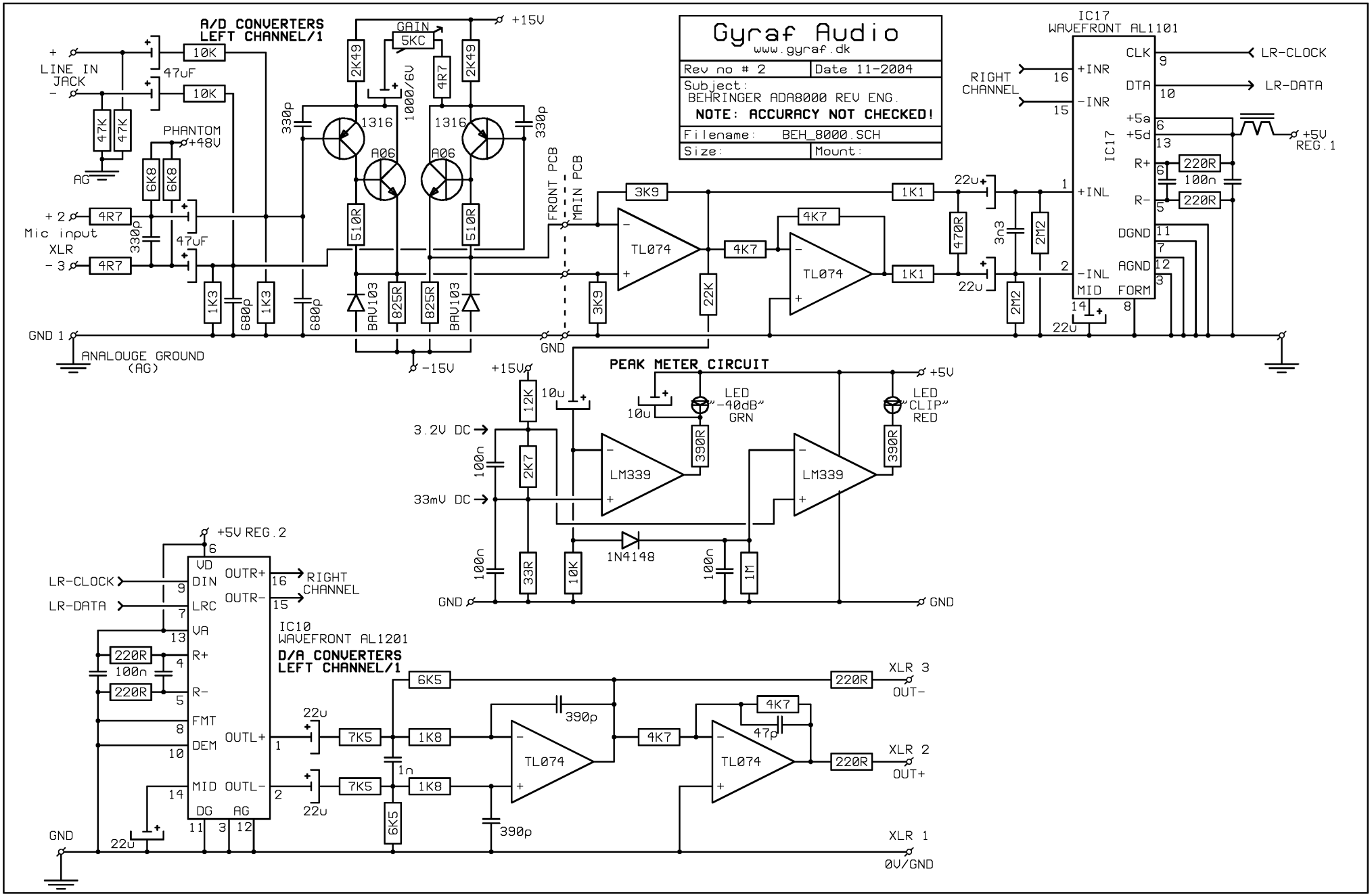
Gyraf Audio
www.gyraf.dk
Rev no # 2
Date 11-2004
Subject:
BEHRINGER ADA8000 REV ENG.
NOTE: ACCURACY NOT CHECKED!
Filename: BEH_8000.SCH
Size:
Mount:
A/D CONVERTERS
LEFT CHANNEL/1
LINE IN
JACK
PHANTOM
+48V
Mic input
XLR
GAIN
5KC
1000/6V
1316
A06
BAV103
FRONT PCB
MAIN PCB
TL074
IC17
WAVEFRONT AL1101
RIGHT
CHANNEL
LR-CLOCK
LR-DATA
+5V
REG.1
ANALOUGE GROUND
(AG)
PEAK METER CIRCUIT
LED
"-40dB"
GRN
LED
CLIP"
RED
LM339
3.2V DC
33mV DC
1N4148
+5V REG.2
IC10
WAVEFRONT AL1201
D/A CONVERTERS
LEFT CHANNEL/1
XLR 3
OUT-
XLR 2
OUT+
XLR 1
0V/GND