SERVICE MANUAL

MODEL:CD-9800

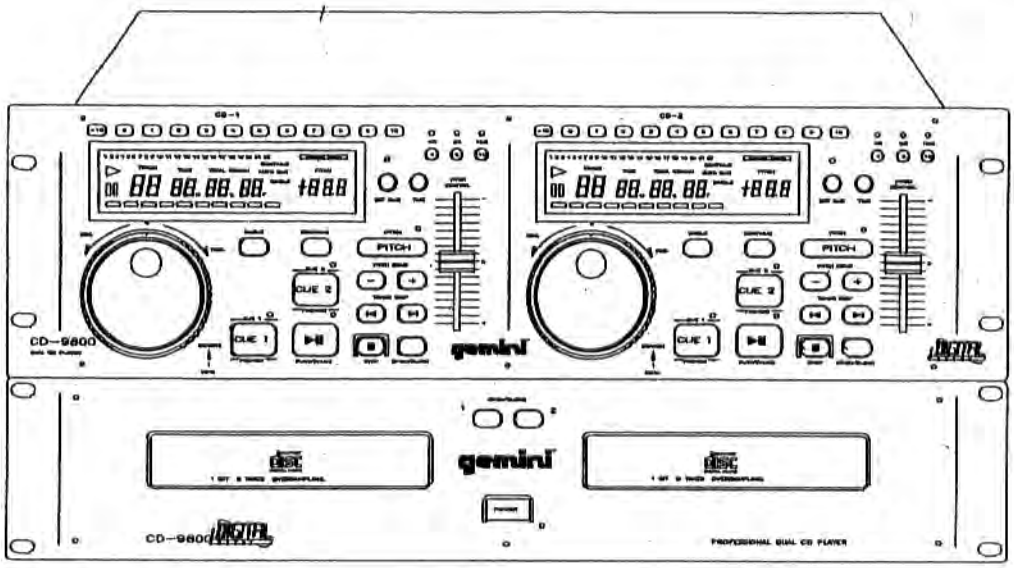

SPECIFICATION

AUDIO CHARCATERISTIC

FREQUENCY RESPONE ..... 20Hz~20KH
HARMONIC DISTORTION ..... LESS THAN 0.03%
S/N RATIO ..... MORE THAN 70dB
CHANNEL SEPARATION ..... MORE THAN 70dB
OUTPUT LEVEL ..... 1.8V+/-0.2V

FUNCTION

TRACK SKIP SELECTION ..... ◁ WITH ▷ AND
SEARCH SELECTION ..... ◁◁ AND ▷▷ BUTTON &FWD.REV.JOG SHUTLE
OPEN/CLOSE ..... DISC TRAY OPEN/CLOSE
CUE1.CUE2 ..... SETTING CUE POINTS
TIME ..... TRACK ELAPSED,REMAIN TOTAL REMAIN
STOP ..... THE TRACK PLAYING STOP MODE
PITCH SECTION ..... PITCH CONNTROL ON/OFF
PITCH BEND ..... +/-4%, +/-8%, +/-16%.
VARIABLE PITCH ..... +/-4%, +/-8%,+/-16% SLIDE WITH RESUME SWITCH.
SEARCH JOG WHEEL ..... TO ACCURATELY POSITION THE DISC AT THE POINT.
SCAN DIAL ..... TO SELECT THE SCANNING DIRECTION AND SPEED.
PLAY/PAUSE ..... OPERATION TO CHANG FROM PLAY TO PAUSE AND TO PLAY
SINGLE ..... WILL ACTIVATE THE AUTO CUE FUNCTION AND EXISTS AT THE BEGINNING OF EVERY TRACK.
CONTINUE ..... TO PLAY CONTINUOUSLY
SET CUE ..... TO ACTIVATE THE DIRECT ACCESS BUTTONS TO SET A CUE POINT.
DIRECT ACCESS (0~10, +10 BUTTONS) ..... TO SELECT TRACK AND TO SET A CUE POINT.

* Specifications and design are subect to change without notice for purpose of improvemant.

DIGITAL SIGNAL PROCESSING

OPTICAL PICK UP ..... 3-BEAM LASER
SAMPING FREQUENCY 44.1KHz
D/A CONVERSION ..... 16 BITS LINEAR
OVERSAMPLING RATE ..... 1 BIT 8 TIME
ERROR CORRECTON ..... CIRE
TRACK SELECTON ..... 1 TO 99 TRACK
DIGITAL OUT ..... BNC CONNECTOR

GENERAL

POWER SOURCE ..... ~115/230V,60/50Hz
POWER CONSUMPTION 16W
DIMENSION
PLAYER UNIT ..... 19"(W)x3.5"(H)x10"(D)
CONTROL UNIT..... 19"(W)x5.2"(H)x2.9"(D)
INSTALLATIN
19" RACK MOUNTABLE PLAYER UNIT, 2U
19" RACK MOUNTABLE CONTROL UNIT, 3U
WEIGHT
PLAYER UNIT 11.7 lbs (5.3Kg)
CONTROL UNIT 3.8 lbs (1.7Kg)

PM5.CD\SVC.CD6\CD9800PM5

DISASSEMBLY PROCEDURES

1. REMOVAL OF TOP COVER

(A) TAKE OUT THE EIGHT SCREWS FROM WHICH THE CABINET FRONT IN MOUNTED IN PLACE.

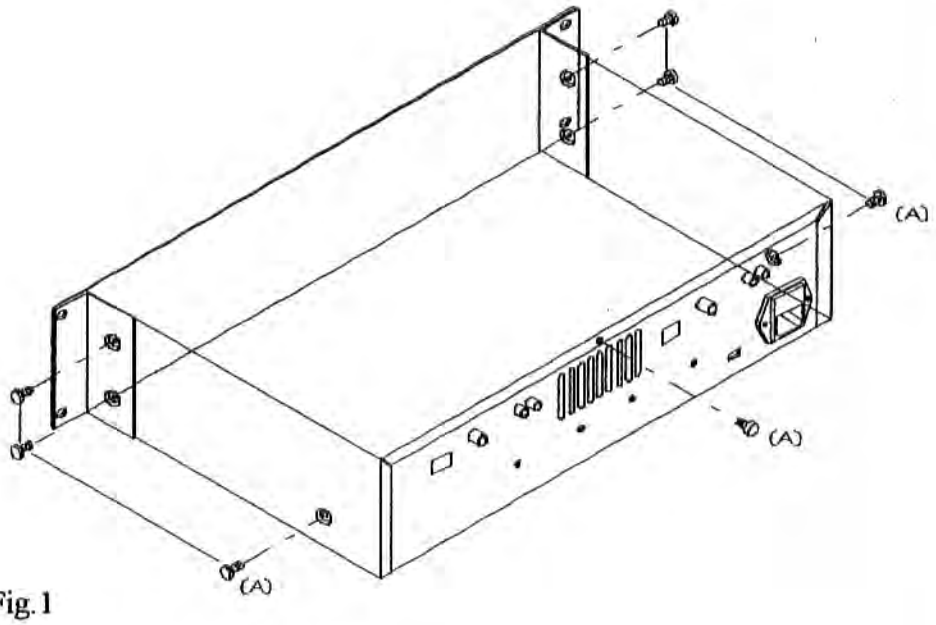

Fig. 1

2. REMOVAL OF FRONT PANAL AND CD MECHISM.

(A) REMOVAL OF FRONT PANEL.
TAKE OUT THE FIVE SCREWS.(Fig.2)

(B) REMOVAL OF CD MECHANISM.
TAKE OUT THE SIX SCREWS AND SIX NUTS.(Fig.2)

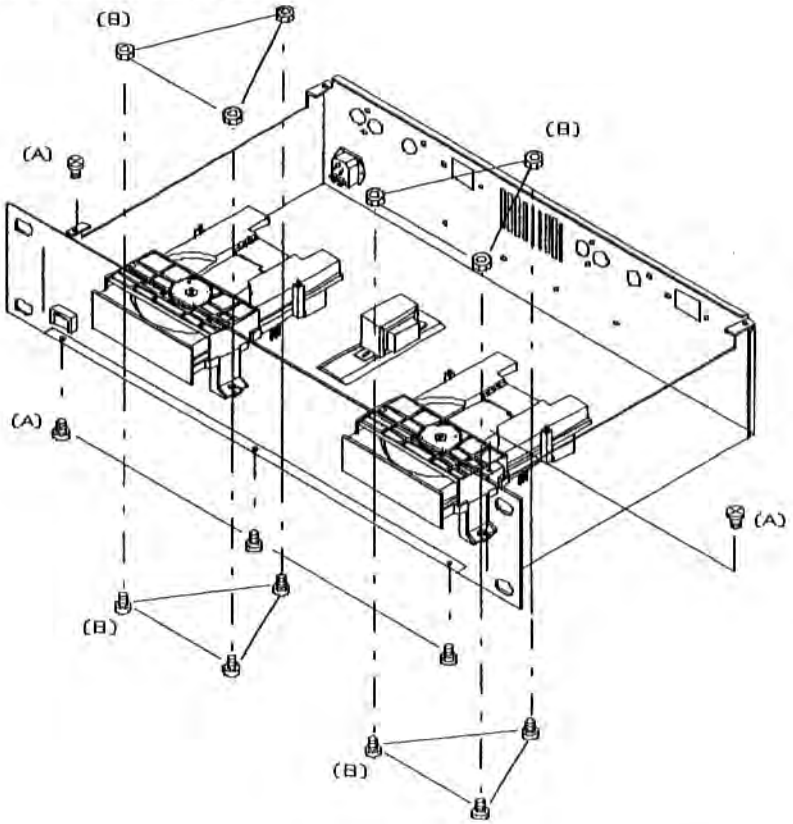

Fig.2

3.REMOVAL OF MAIN PCB (Fig.3)

(A.) REMOVE THE TWO SCREWS ON THE RCA JACK. AND REMOTE FOUR SCREWS ON THE 8P DIN CONNECTOR, MAIN PCB.

(B.) REMOVE THE EIGHT CONNECTORS ON THE MAIN PCB.(TE201.203.204.205.208.209.210)

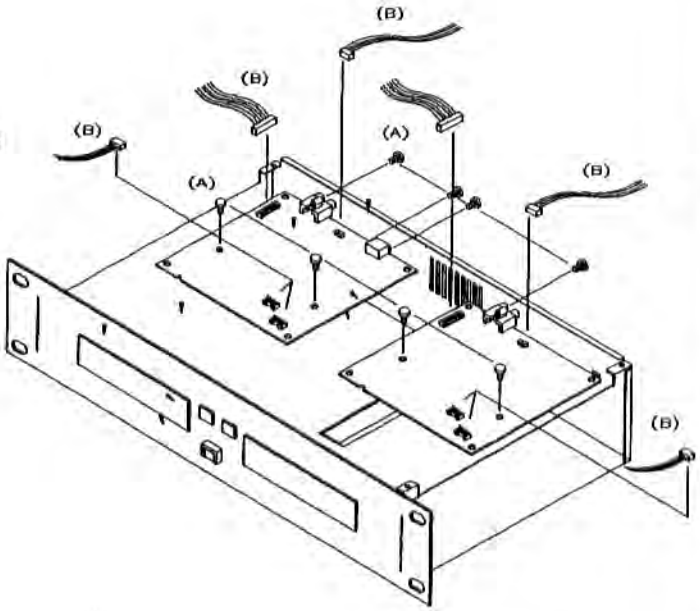

Fig.3

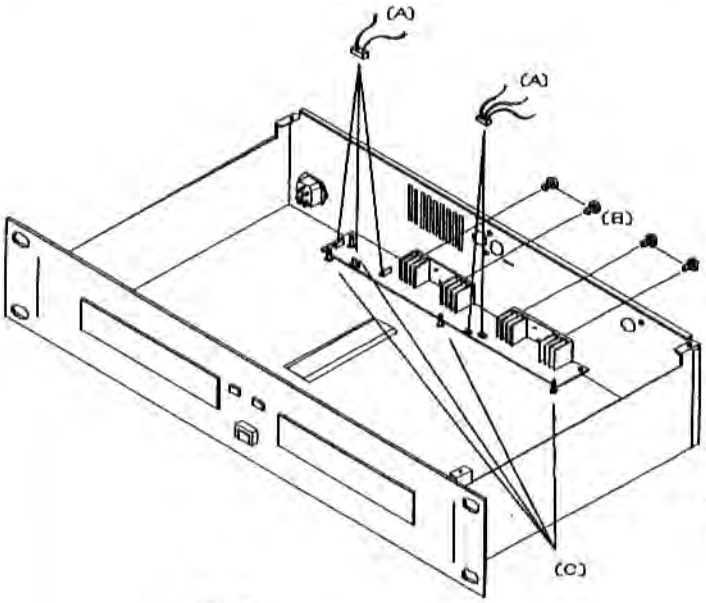

Fig.4

4.REMOVAL OF POWER PCB(Fig.4)

(A.) REMOVE THE SEVEN CONNECTORS ON THE POWER PCB.(TE601.602.603. 604, 605.606.607)

(B.) REMOVE THE TWO SCREWS.

(C) DEPART THE PCB FROM THE 4 HOLDERS

5.REMOVAL OF CONTROL PCB (Fig.5)

(A.) REMOVE THE SIX SCREWS ON THE CONTROL COVER

(B.) REMOVE THE TEN SCREWS ON THE FRONT PANAL.

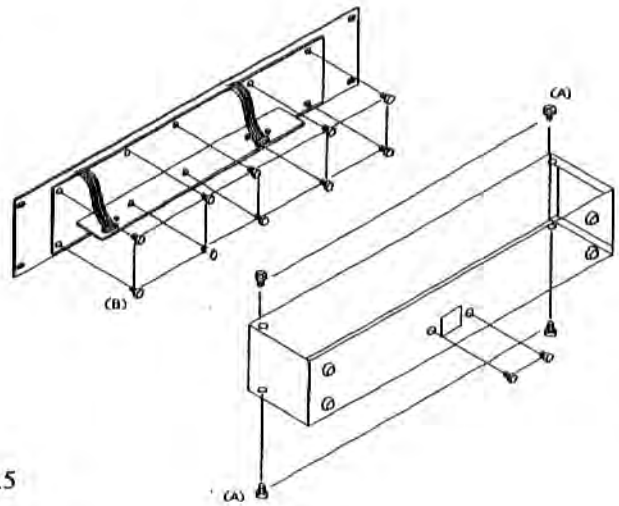

Fig.5

ADJUSTMENTS

1.Tracking Blance Adjustment.

1-1.Put unit into play mode.

1-2.Press start key. Set pitch switch:off & variable pitch:center.

1-3.The scop measure terminal connect to servo PCB TEST-1 pin TE,GND connect to TEST-1 pin VC.

(a.)Set scop to read "DC".

(b.)Set scop Volts/Div. to 0.5V/Div and Time/Div. to 1ns.

1-4.Short-Circuit TEST-1 pin TP and VC.

1-5.Adjust TE SFR101 to make A= B

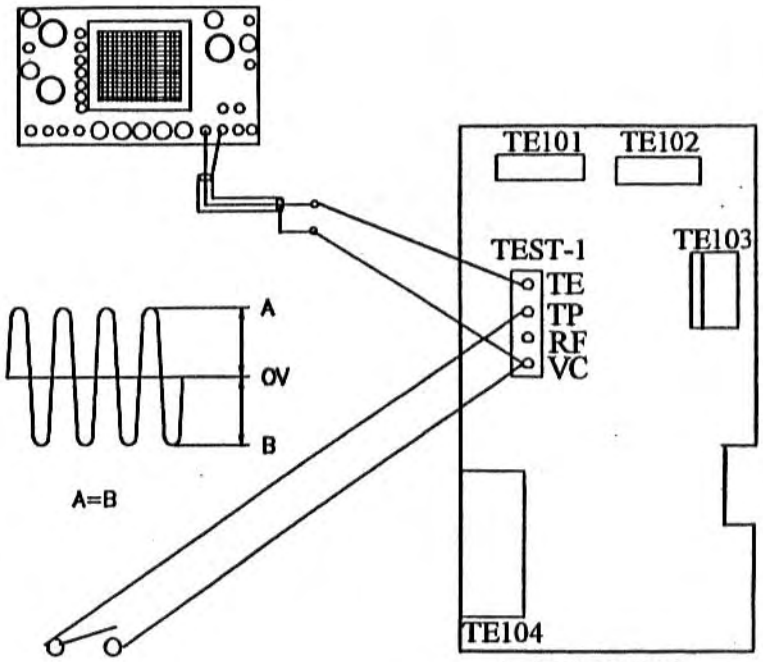

PC96C00601

2.EYE Parttern Adjustment.

2-1.The scop measure terminal connect to TEST-1 pin RF, GND connect to TEST-1 pin VC.

(a.) Set scop to read "AC".

(b.) Set scop Volts/Div. to 0.2V/Div. and Time/Div to 0.5us/Div.

2-2.Adjust FB SFR102 EYE pattern make to max.

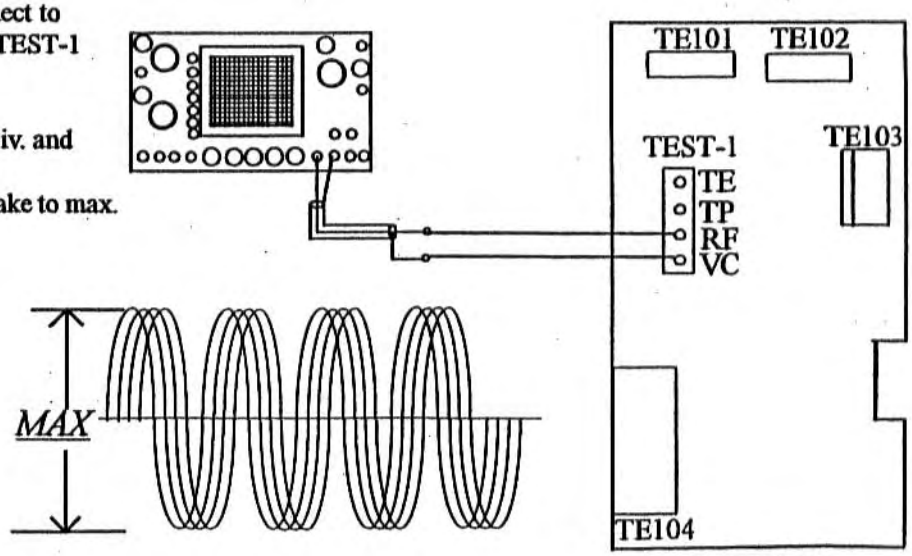

PC96C00601

PACKING DIAGRAM

CD-9800 PACKING DIAGRAM

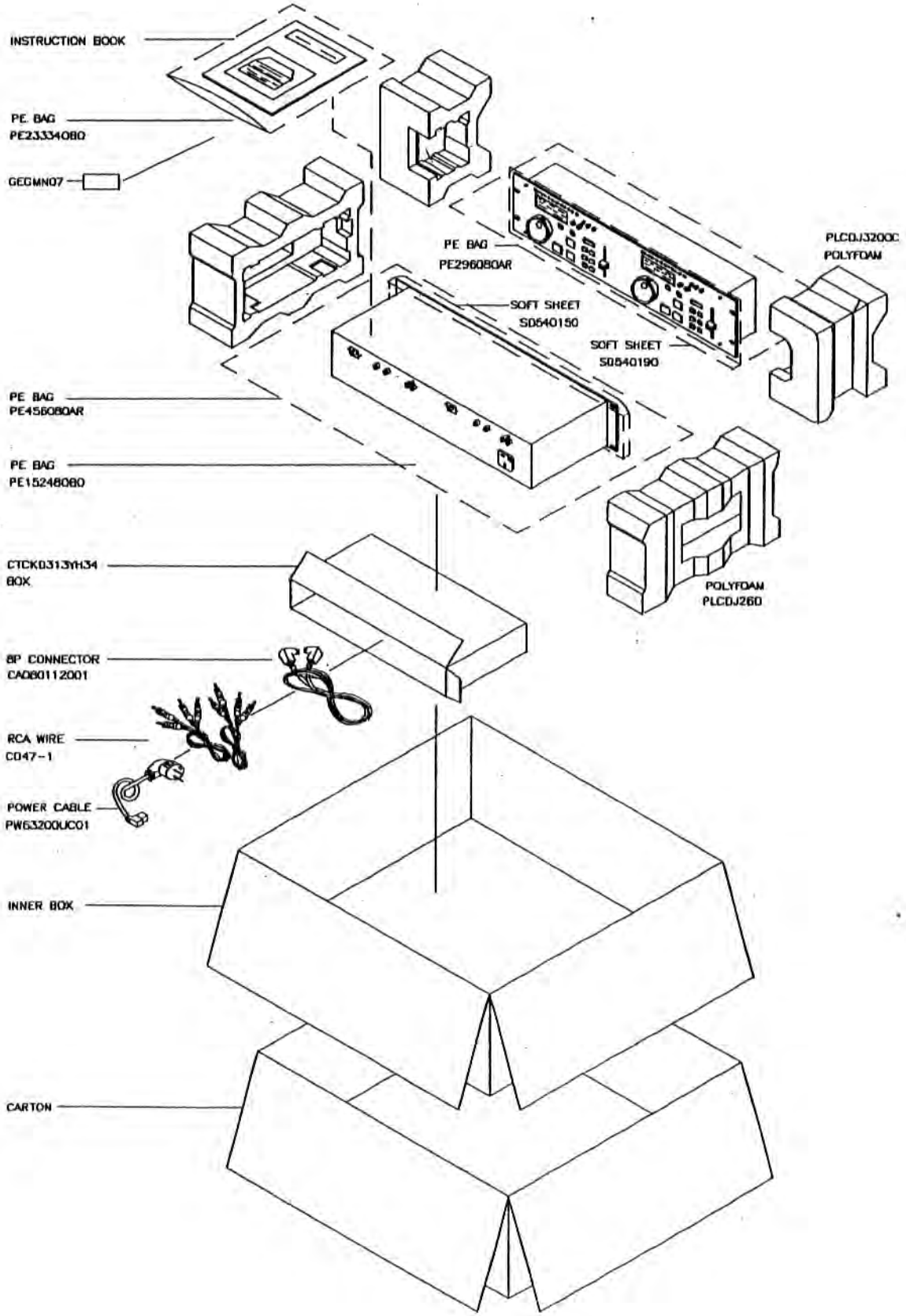

WIRING DIAGRAM

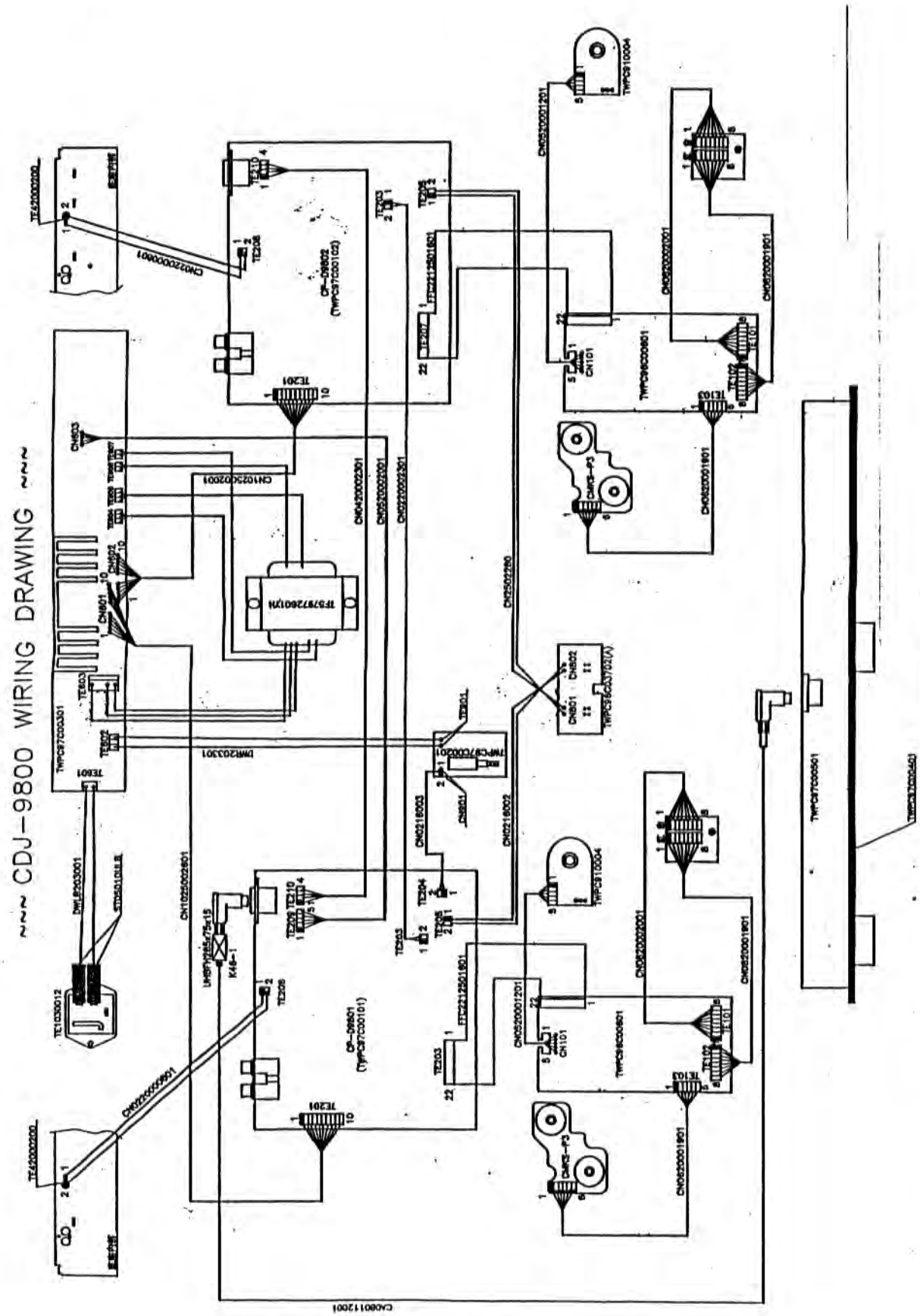

EXPLODED VIEW

(MAIN UNIT)

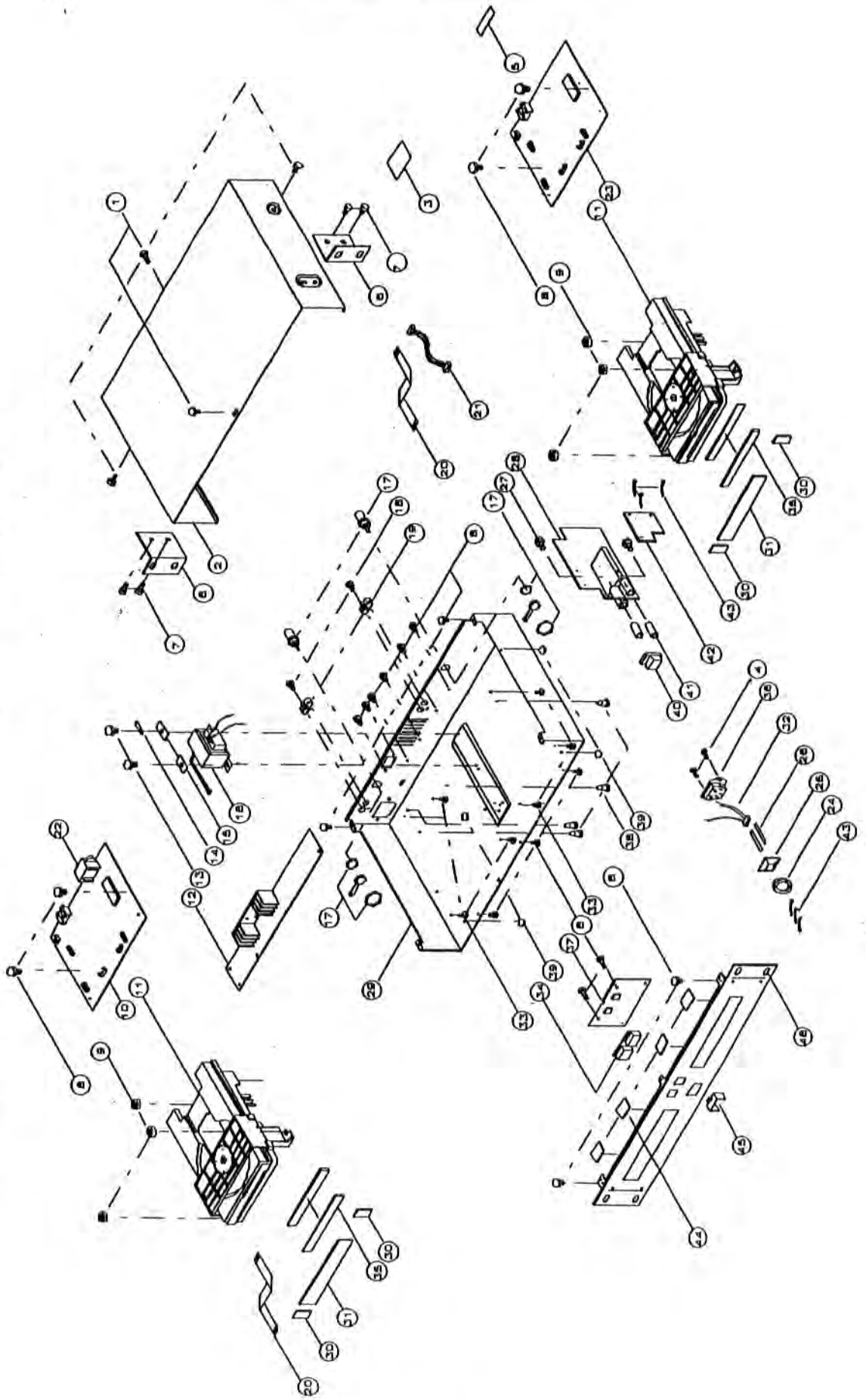

CD-9800 EXPLODED VIEW (MAIN UNIT) GEMINI

EXPLODE VIEW CM-H9P

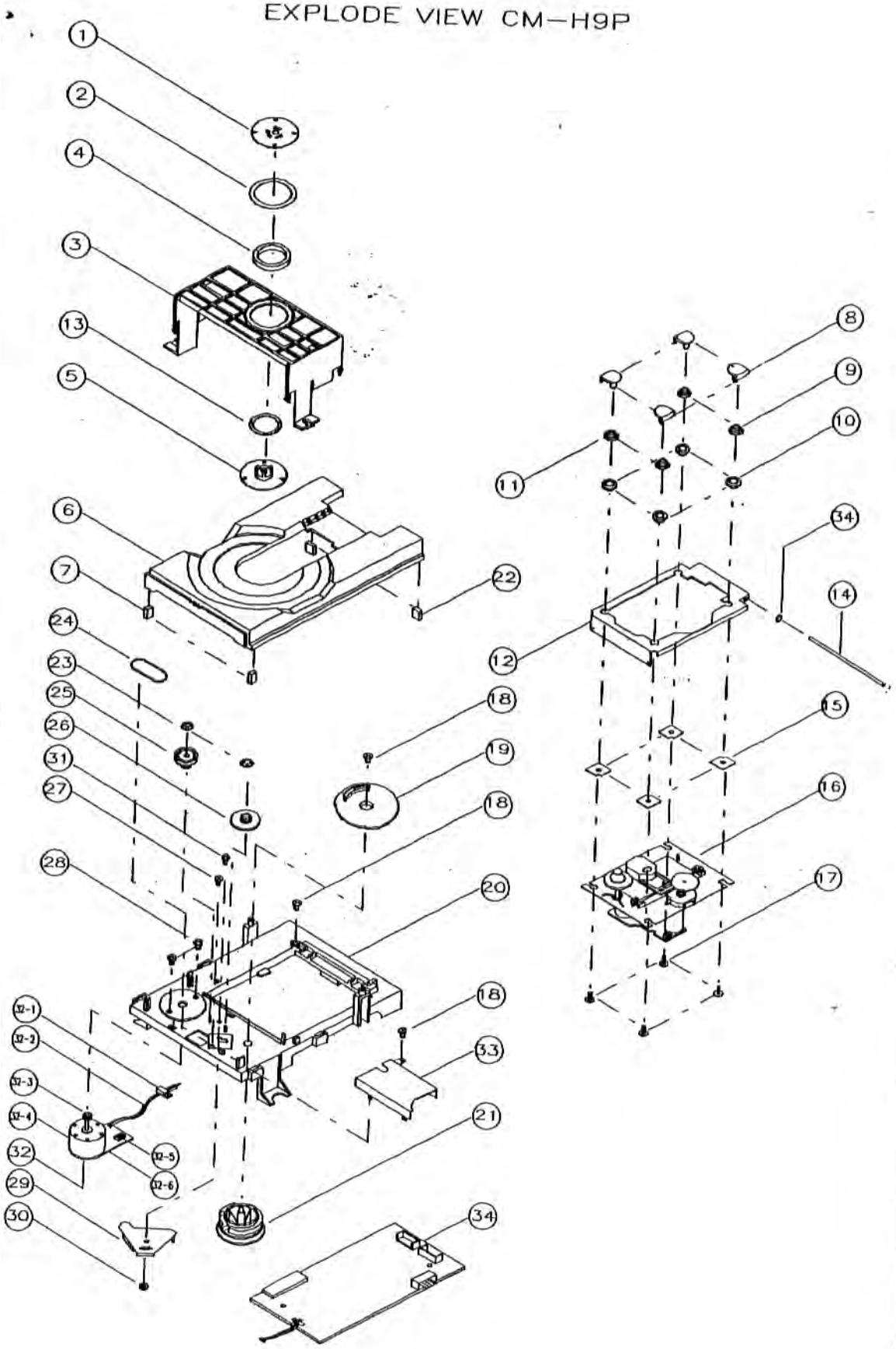

EXPLODED VIEW
(CONTROL UNIT)

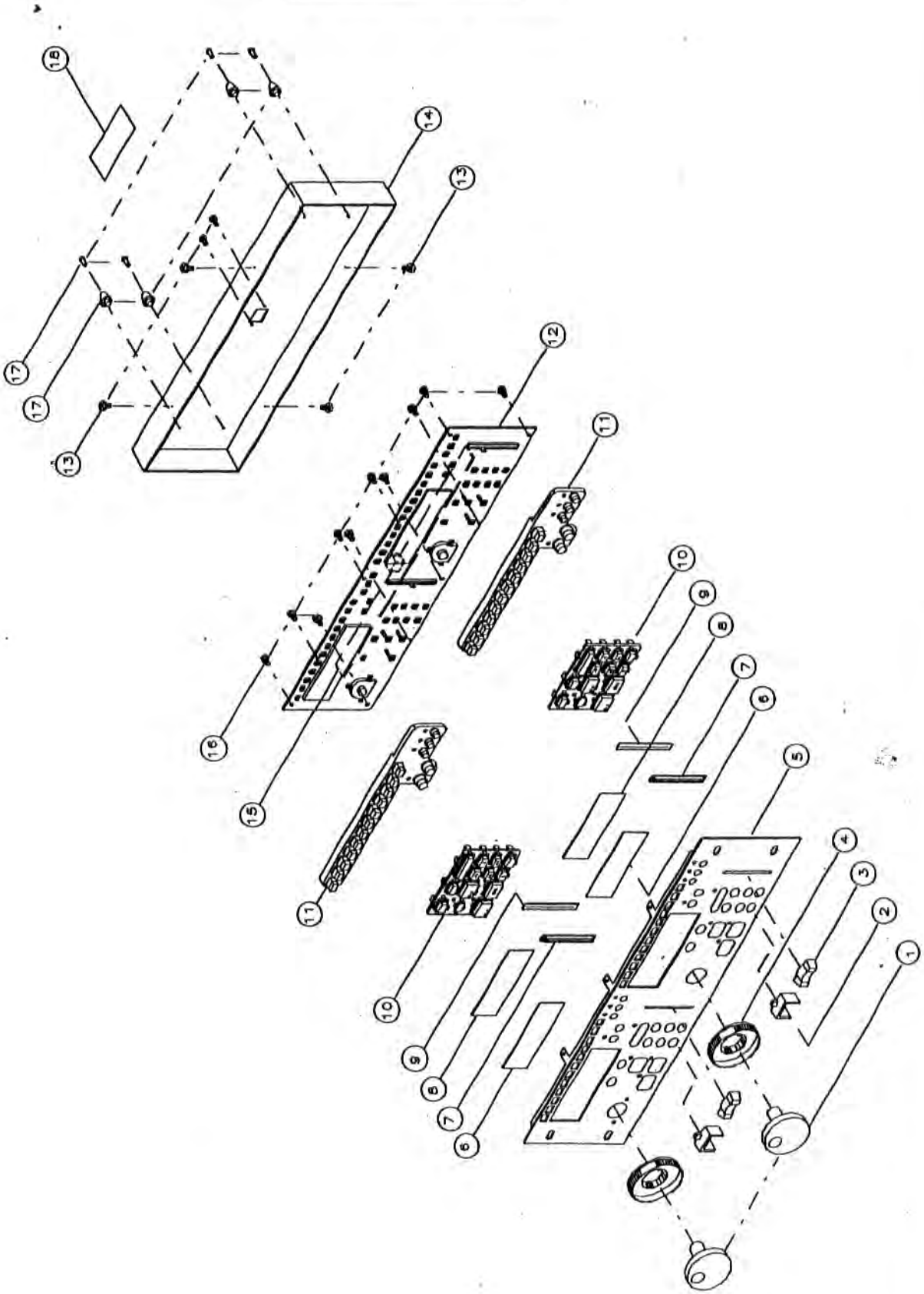

PART LIST

SERVO PCB ASS'Y (TWPC96C00602)

Symbor No.	Part No.	Description
D101	DIN4002	Diode 1N4002
IC101	ICCXA1571M	IC.CXA1571M
IC102	ICCXA1372AQ	IC.CXA1372AQ
IC103	ICLA6532M	IC.LA6532M
IC104	IC6218	IC.BA6218
Q101	TRA950Y	Transistor 2SA950 or 952
SFR101	SV20305	Semi-fixed 20KB
SFR102	SV10305	Semi-fixed 10K
TE101	TE61200801	8P Connector
TE102	TE61200801	8P Connector
TE103	TE102000602	5P Connector
TE104	FPC622502201	22P FFC Socket
CN101	CN0520001201	5P Connector W/W

POWER PCB ASS'Y (TWPC97C00301)

Symbol No.	Part No.	Description
D601	DB005	Bridge Rectifier Diode
D602,603	DIRL202	Rectifier Diode 2A.
ZD602	DIZDHZ5B2T5	Zener Diode
IC601	IC7805	IC 7805
IC602	IC7805L	IC 7805L
IC603	IC7905L	IC 7905L
Q601	TRB1185	Transistor 2SB1185
Q602	TRC536	Transistor 2SC536
ZD601	ZD7505T	Zener Diode 7.5V
EMC601	UH962021	EMC Coil
SW601	SW3331	Power Slide Switch
D605,606	D132T	Diode 1SS132

FUNCTION PCB ASS'Y

TWPC97C00401

D401~ D416	D132T	Diode 1S132
VFT401~ VFT402	FL11BT156GK	FL Display
IC401	ICYH401	uCOM IC-YH9702
LED408		
LED412	LD-LG2040	Green LED
LED401~ 403,409 414,416~ 418,	LDIFR324HD	Red LED
LED404, 405,407, 411,413 415.	LD1030	Yellow LED
SW401~ 418,420~ 449,451~ 462.	SWSKHVBE3520	Tack Switch
JOG401. 402	Jog Shuttle	
VR401, 402.	VRS1036504	Slide-Variable Resistor 10KB
X401	XTM08000X2	Crystal 8MHz

TWPC97C01801

CN1	CN0216003	2P Connector 160mm
CN2	CN2502280	2P Connector 180mm
SW1,2.	TS65456	Tack Switch

MAINE PCB ASS'Y (TWPC97C00101)

D201.202	D132T	Diode 1SS132
TE207	FCNIR1252201	22P Scoket
IC205.301.		
IC302	ICBA4558	IC BA4558
IC201	~~ICYH9702~~	u-Com ~~YH9702~~ IC YH9701 4778
IC202	ICCXD2500BQ	IC CXD2500BQ
IC203	IC7404HCU	IC 74HCU04
IC204	ICSN74LS624N	IC SN74LS624N
IC206	ICSM5874AM	IC SM5874AM
RCA301	RJ1031A-10	RCA Jack
TE201	TE622501001	10P Connector Base
TE204.205	TE10250201	2P Connector Base
TE203.208	TE612000202	2P Connector Base
TE422000801		8P MINI DIN
Q201.202	TRC536	Transistor 2SC536
Q203	TRA933T	Transistor 2SA933 or 2SA608
Q301.302	TRC2878	Transistor 2SC2878
X201	XTM8000	Crystal 8MHz
X202	XTM16934	Crystal 16.934MHz

I/O P.C.BOARD (TWPC97c00501)

TE9B	CN0325001101	3P Connector 110mm
TE8B	CN0425002201	4P Connector 220mm
IC1.2	IC7805L	IC. 78L05
TE1	TE422000801	8P Mini. DIN Jack
Q1	TRC536	Transistor 2SC536

TWPC97C00201(Power Switch P.C Board)

SW901	CD60	Power Switch
C901	MC103125	Capacitor 0.01uF
LED901	LDIFR324HD	Red LED

IC-201 = IC97014778
IC-401 = IC-YH9702

PARTS LIST

MAIN UNIT PARTS

Symbor No.	Description	Part No.
1	Srews	SC0306PBBI
2	Top Cover	MT0130109
3	Rating Serial no.Lable	LAC13GMN55(A)
4	Screw	SC0308FBBI
5	Date Label	LA62GMN37
6	Holder Plate	MT0104451
7	Screw	SC0310W8BBI
8	Screw	SC0308RBZI
9	Copper Holder	1MT0104454
10	Main P.C. Board Ass'y	CP-D9801
11	Mechanism	CM-H9P
12	Power P.C. Board Ass'y	TWPC97C00301
13	Screw	SC3508RBZI
14	Lug	TMSM261
15	Fixed Plate	MT0104452
16	Transformer	TF57972601YH
17	X'SR Socket	TE42000200
18	Screw	SC0312RBZ I
19	Jack Proteccter	PT0104424
20	FFC	FFC2212501601
21	2P Connector	CN0220002301
22	Holder	PT0104415
23	Main P.C. Board	CP-D9802
24	Ring Core	UHR128x75x18
25	Tie Holder	PT0104432
26	Heat-Shrinking tube	ST05010ULB
27	Screw	SC0316PBZI
28	Power P.C. Board	TWPC97C00201
29	Bottom Chassis	MT01303521
30	EVA	EVA0104409
31	Tray Panel	PT0102912092
32	Lead wire	DWLB203001
33	Screw	SC0310RIBI
34	Rubber Knob	RU0110604
35	EVA	EVA0104408
36	Power Scoket	TE1030012
37	Open/Close P.C.Board	TWPC97C01801
38	P.C. Board Holder	PT0103206
39	PU Stand	BASJ5012
40	Power Knob	CKA106B5
41	Copper Holder	M0104413
42	Protector Plate	PT0104703
43	Clip	K46-1
44	Velet Carprt	NM0130102
45	Power Knob Frame	PT0104428
46	Front Panel	MT013002213

CONTROL UNIT PRT

Symbor No.	Description	Part NO.
1	Knob Base	PT0110630
2	Knob Fram	PT0104427
3	VR Knob	PT0110622
4	Rotate Knob Base	PT0110755
5	Front Panel	MT013003211
6	View Panel (A)	PVC01GMN05
7	VR Base	PT0104317
8	View Panel (B)	PVC01GMN06
9	Velvet Carpet	NM1110601
10	Rubber Knob	RU01106061
11	Rubber Knob	RU01106071
12	Control P.C. Board Ass'y	TWPC97C00401
13	Screw	SC0306PBBI
14	Rear Cover	MT0120432B1
15	I/O P.C. Board Ass'y	TWPC97C00501
16	Screw	SC0308RBZI
17	Rubber Stand	BAPF02A
18	Rating Label	LAC13GMN55(B)

PARTS LIST

CM-H9 CD MECHANISM PARTS LIST

1	Holder	M0104450
2	EVA	EVA0104402
3	FRAM	P0120201
4	MAGNET	MAG0104301
5	Disc Holder	PT0104313
6	Table Holder	P0131101
7	EVA	EVA0104402
8	Cushion Holder (A.)	P0104402
9	Cushion Spring (B.)	SP0130904
10	Cushion Rubber	RU0130707
11	Cushion Spring (E.)	SP0130905
12	Cushion Chassis Ass'y	TW0130802
12-1	Cushion Chassis	M0130802
12-2	Slide Shaft	M0109601
13	Washer	FW084505IZ
14	Rotate Shaft	M0109602
15	Cushion Holder(B)	P0104403
16	Laser Pick-up Ass'y	CMKSM-2101BDM
17	Screws	SC0208W8BZI
18	Screws	SC2608W8BZI
19	Drive Gear	P0112001
20	Chassis	PT0131004
21	Drive Cam	P0105401
22	EVA	EVA0104404
23	E Ring	CSB72-6
24	BELT	BE251616
25	Driven Pulley	P0109501
26	Driven Gear	P0105402
27	Screws	SC0208RABI
28	Screws	SC2650RIZI
29	Plate Ass	TW0111101
29-1	Link-Up Plate	M0111101
29-2	Brass Boss	M0111201
30	Brass Boss	M0113102
31	Screws	SC0310IIBI
32	Motor Ass	TW9I12T391
32-1	Leaf Switch	SW12401
32-2	3P Leacd Wire	CN0370
32-3	Motor Pulley	P0109502
32-4	Motor	ME9I12T39
32-5	5P Connector	TE10200501
32-6	Motor PCB	PC91004
33	Gear Cover	M0110101
34	Servo P.C. Board	TWPC96C00601

LA6532M

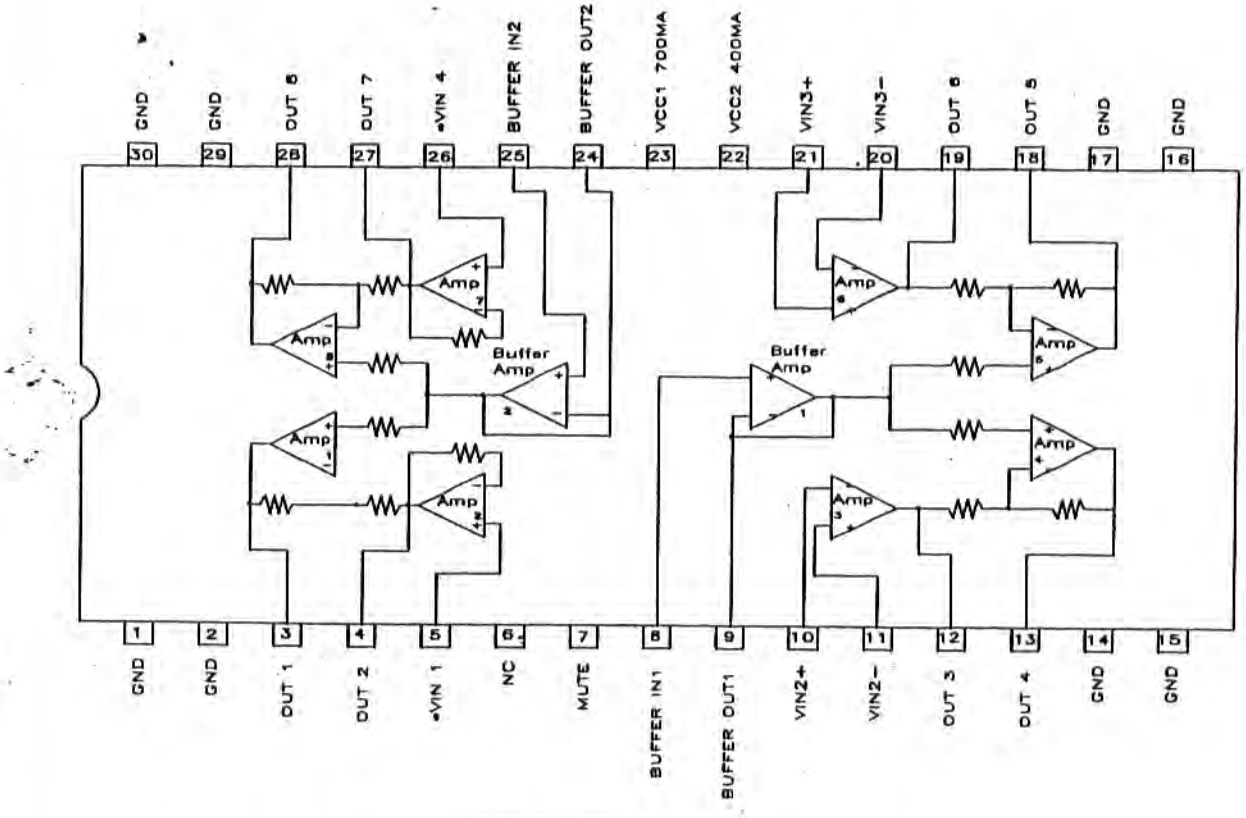

CXD1372AQ

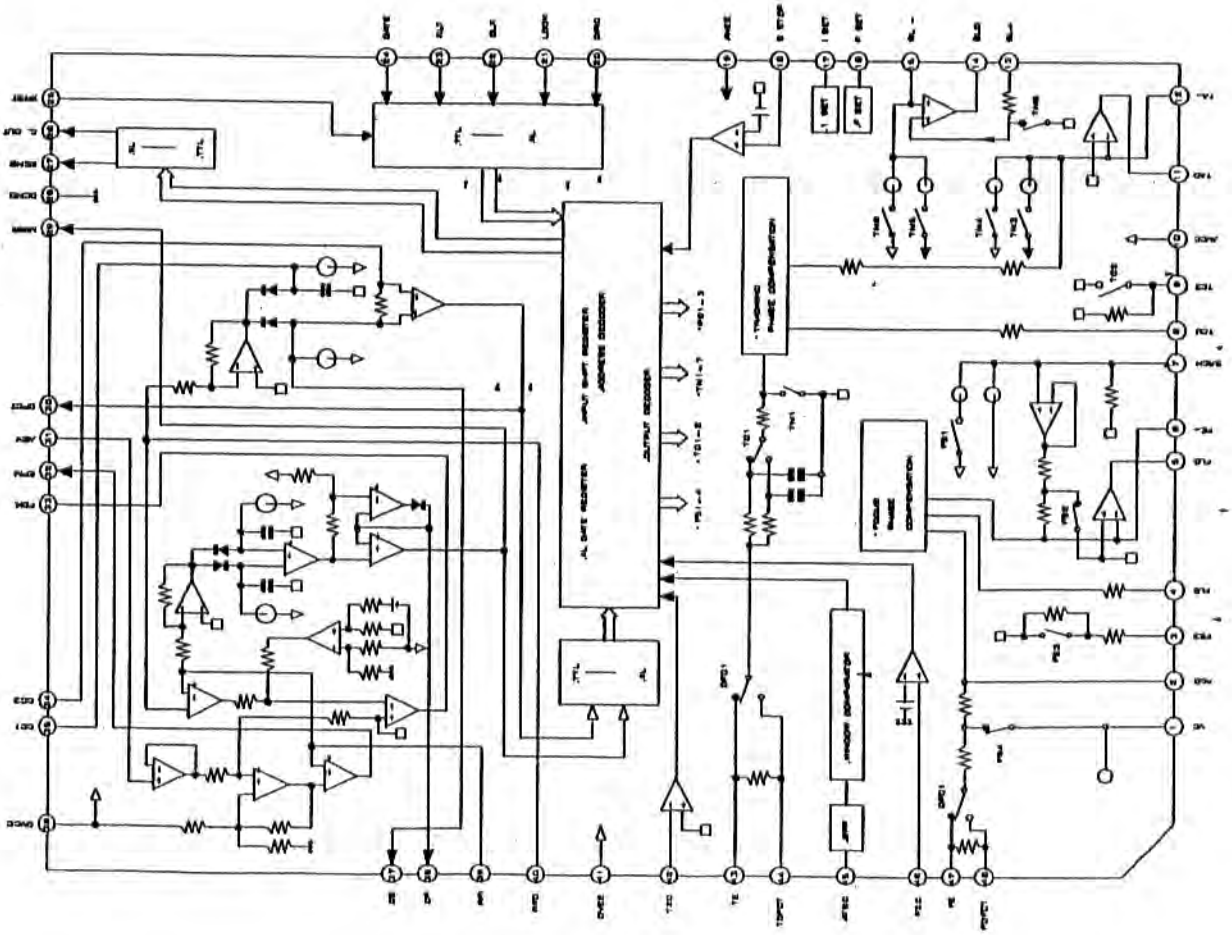

CXD2500BQ

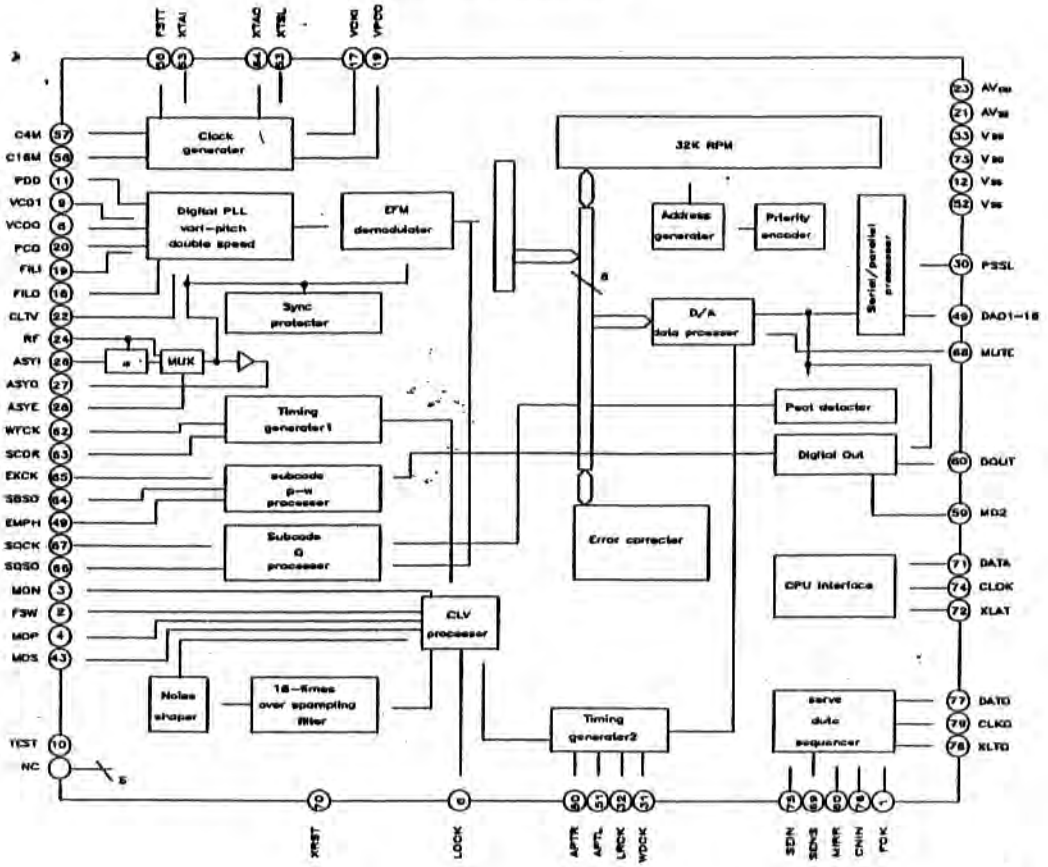
Clock generator
Digital PLL vari-pitch double speed
EFM demodulator
Sync protector
MUX
Timing generator1
subcode p-w processor
Subcode Q processor
CLV processor
Noise shaper
18-times over sampling filter
Timing generator2
32K RAM
Address generator
Priority encoder
D/A data processor
Serial/parallel processor
Peak detector
Digital Out
Error corrector
CPU interface
servo data sequencer
C4M
C16M
PDO
VCO1
VCOO
FCO
FILI
FILO
CLTV
RF
ASYI
ASYO
ASYE
WFCK
SCOR
EXCK
SBSO
EMPH
SQCK
SQSO
MON
FSW
MOP
MDS
TEST
NC
PSSL
DAO1-18
MUTE
DOUT
MD2
DATA
CLOK
XLAT
DATO
CLKO
XLTO
XRST
LOCK
APTR
APTL
LRCK
WDCK
SEIN
SENS
MIRR
CNIN
FOK

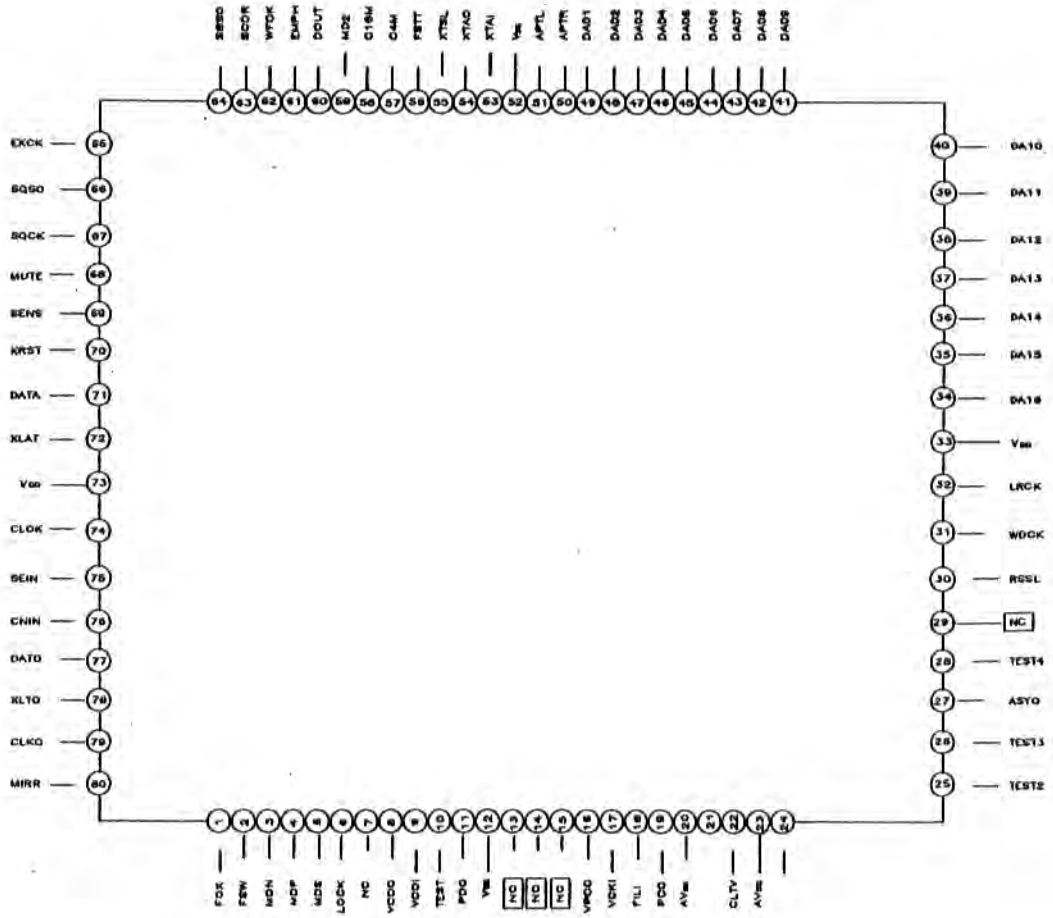
SBSO
SCOR
WFCK
EMPH
DOUT
MD2
C16M
C4M
RSTT
XTSL
XTAO
XTAI
APTL
APTR
DAO1
DAO2
DAO3
DAO4
DAO5
DAO6
DAO7
DAO8
DAO9
EXCK
SQSO
SQCK
MUTE
SENS
XRST
DATA
XLAT
CLOK
SEIN
CNIN
DATO
XLTO
CLKO
MIRR
DAO10
DAO11
DAO12
DAO13
DAO14
DAO15
DAO16
LRCK
WDCK
PSSL
NC
TEST4
ASYO
TEST3
TEST2
FOK
FSW
MON
MOP
MDS
LOCK
VCOO
VCOI
TEST
PDO
FILI
CLTV

IC7805

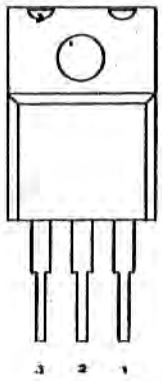

TRB1185

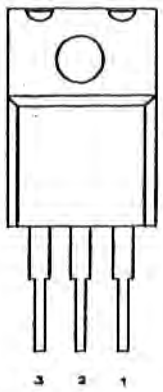

TRC536

TRC2878

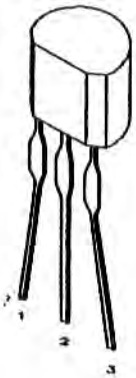

IC7805L

IC7905L

CXA1571S

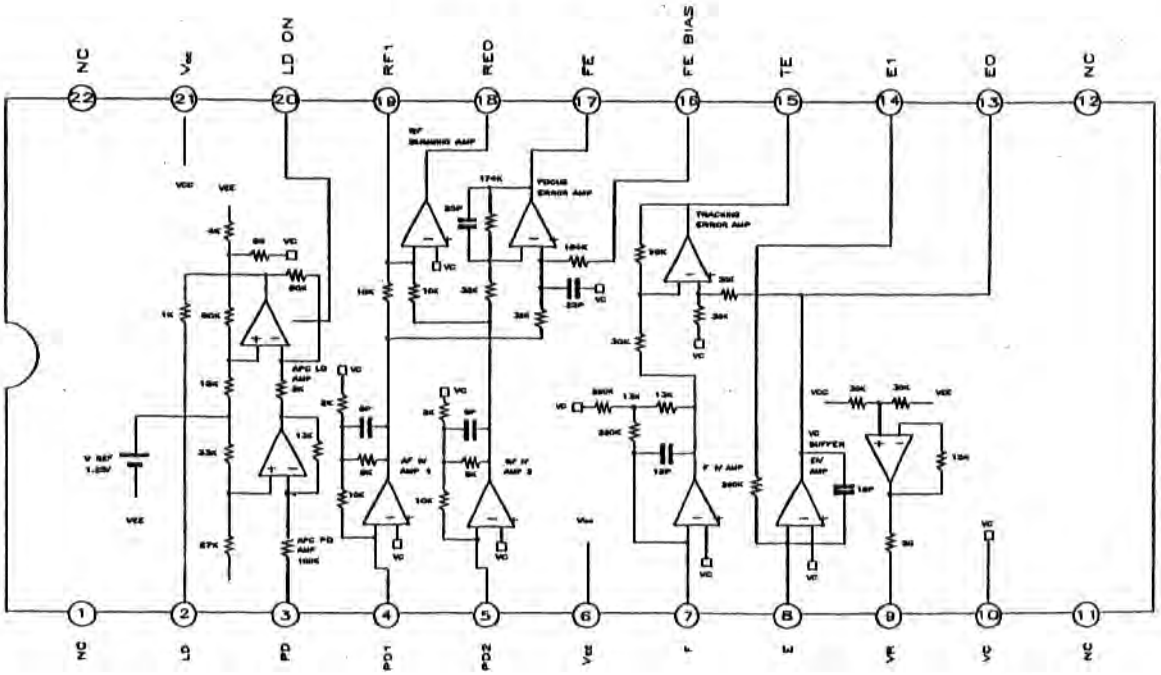

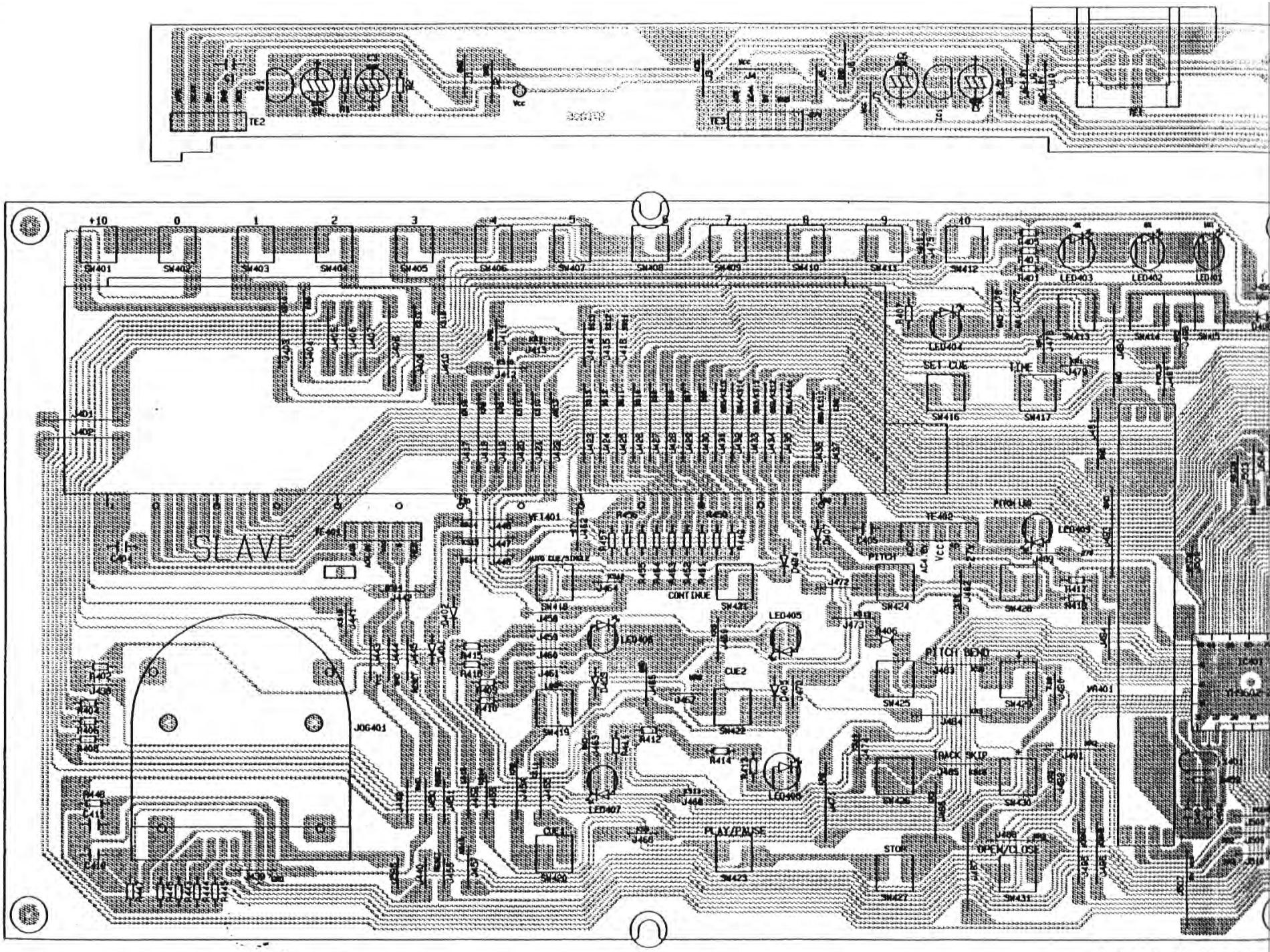
SLAVE
SET CUE
TIME
CONTINUE
CUE2
CUE1
PITCH
PITCH LED
PITCH BEND
TRACK SKIP
PLAY/PAUSE
STOP
OPEN/CLOSE
SW401
SW402
SW403
SW404
SW405
SW406
SW407
SW408
SW409
SW410
SW411
SW412
SW413
SW414
SW415
SW416
SW417
SW418
SW419
SW420
SW421
SW422
SW423
SW424
SW425
SW426
SW427
SW428
SW429
SW430
SW431
LED401
LED402
LED403
LED404
LED405
LED406
LED407
LED408
LED409
TE1
TE2
TE3
TE401
TE402
VR401
IC401
JOG401

FUNCTION

I/O PCB

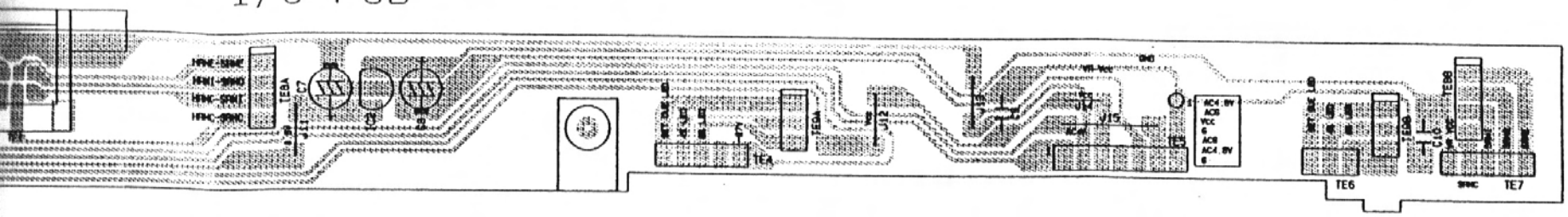

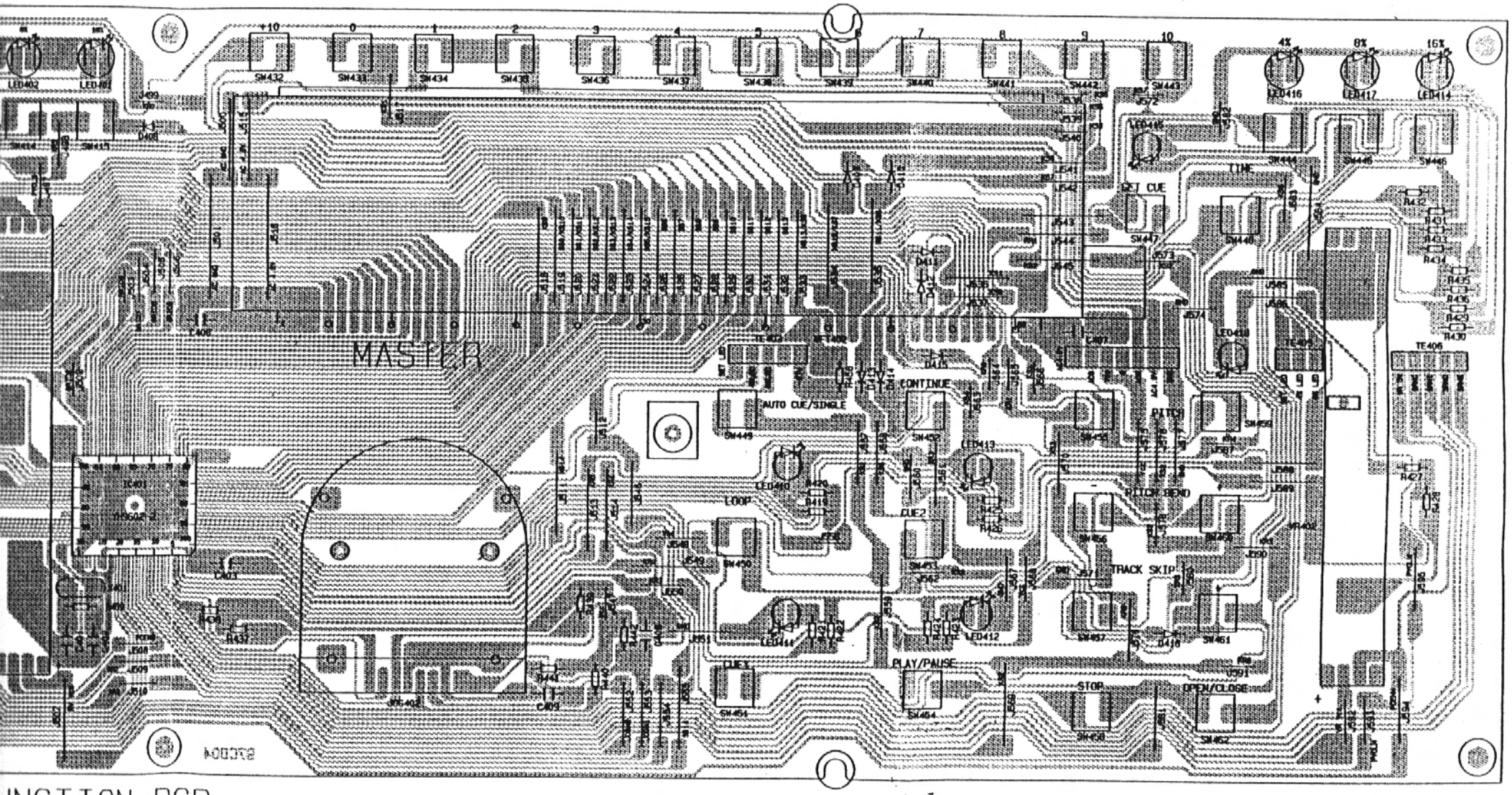

UNCTION PCB

MAIN PCB

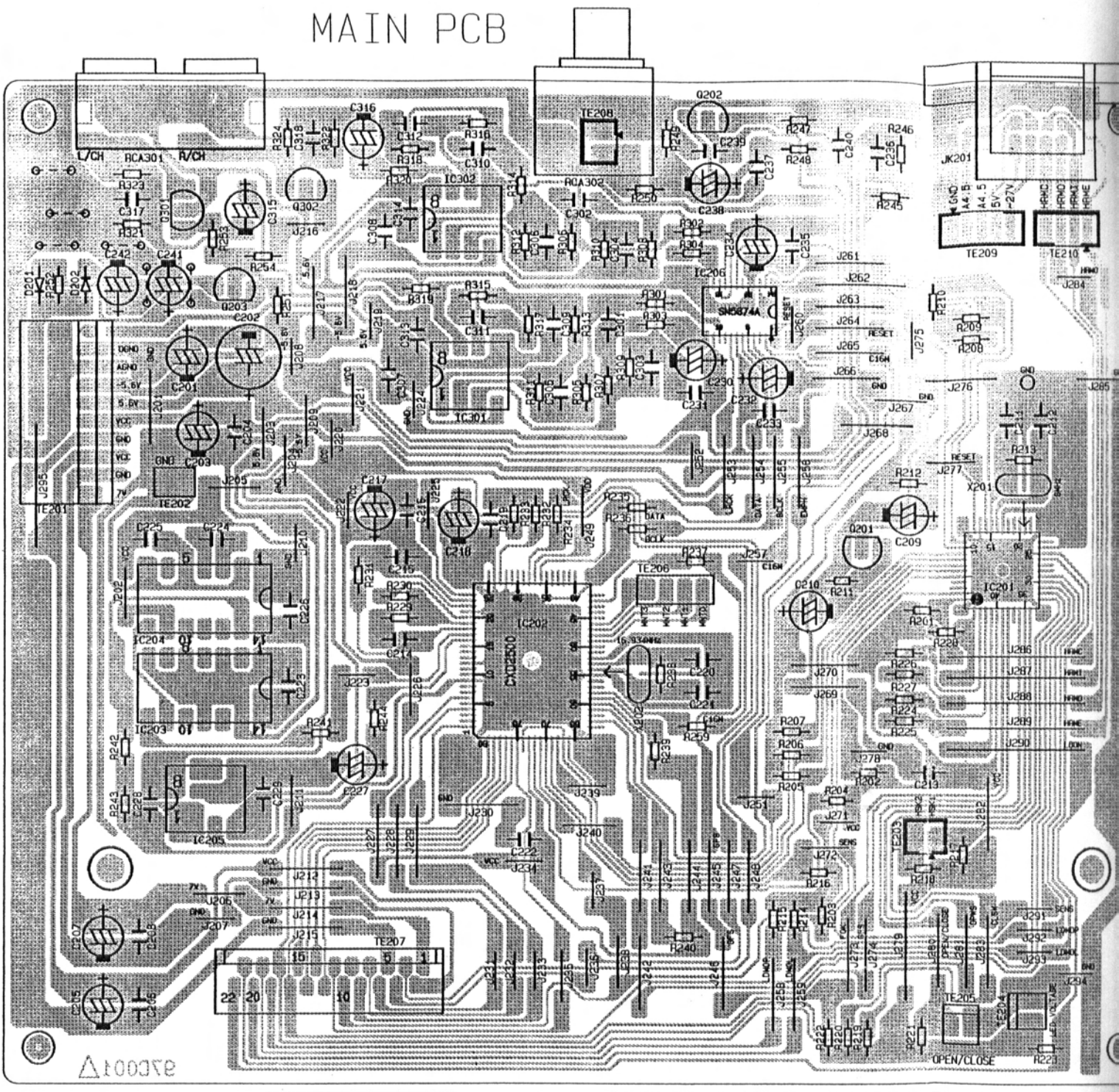

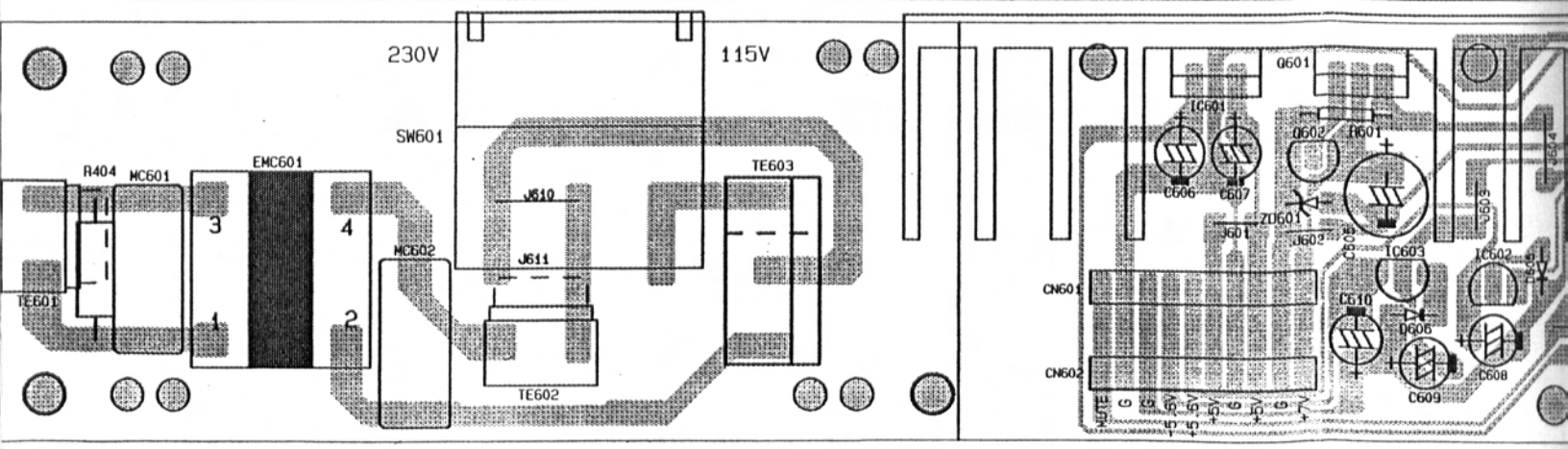

POWER PCB

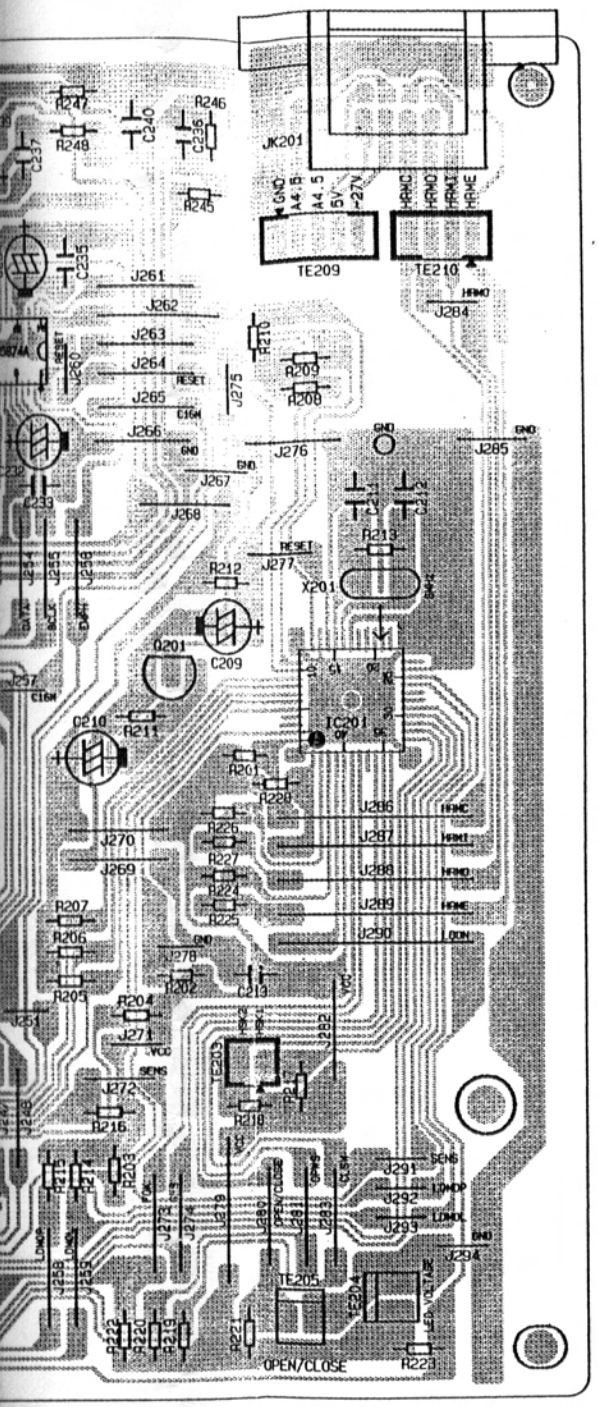

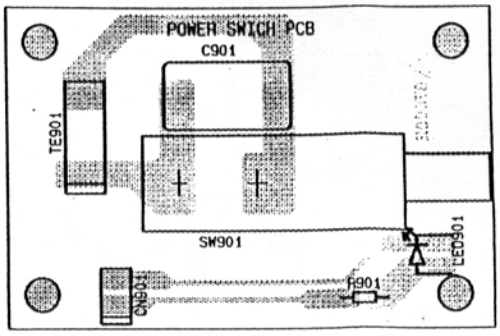

POWER SW PCB

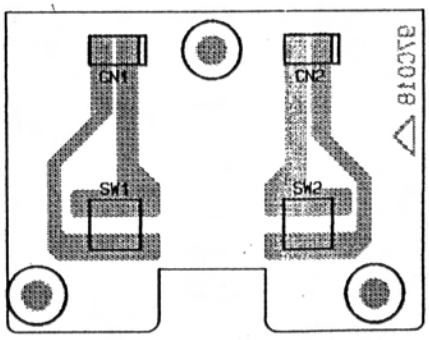

OPEN/CLOSE PCB

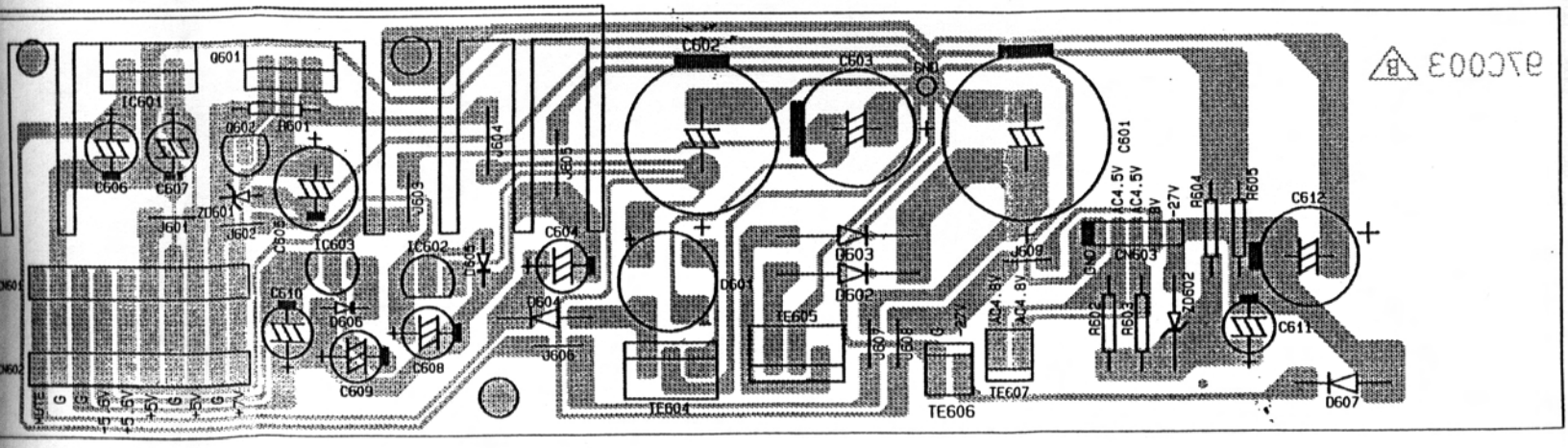

POWER PCB

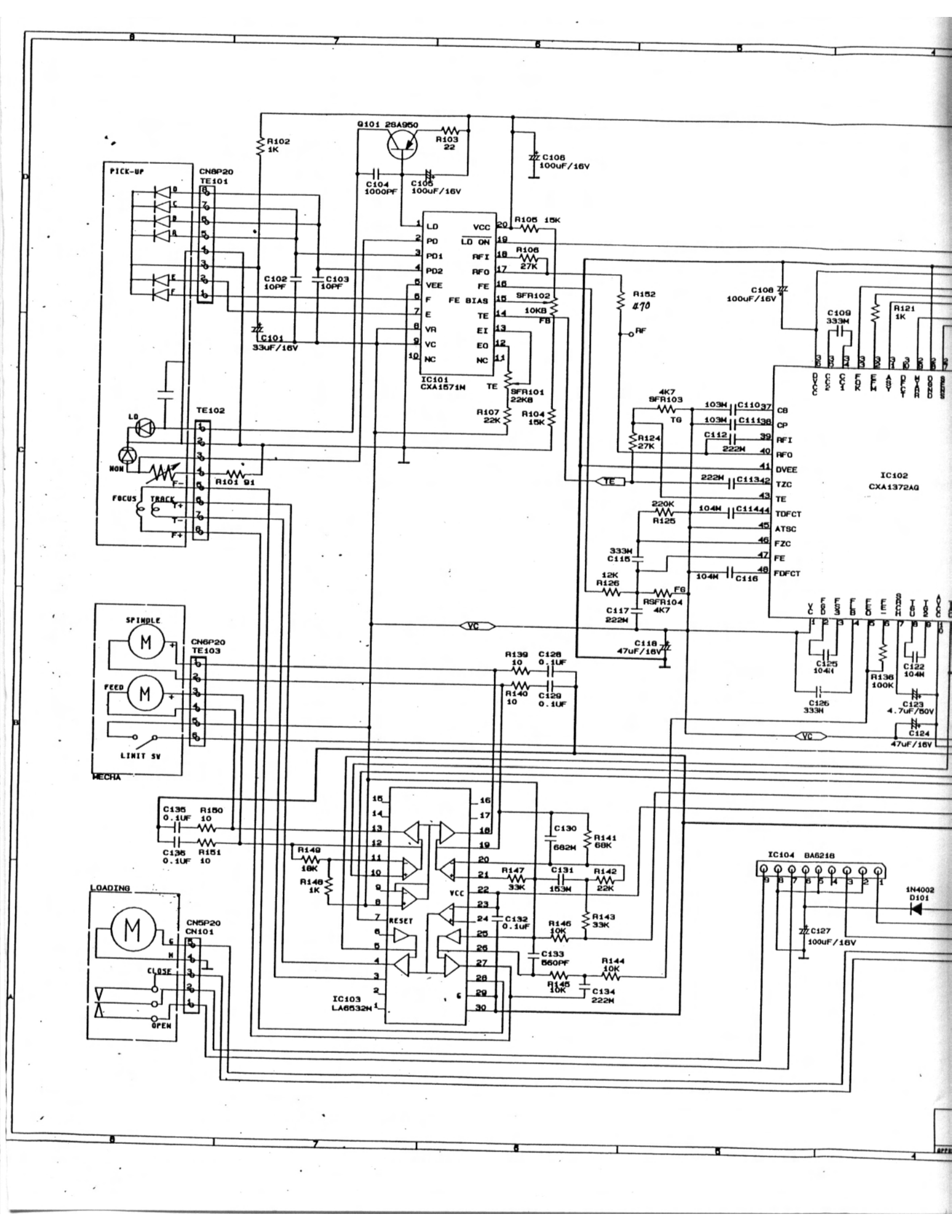
PICK-UP
CN8P20
TE101
R102
1K
Q101 2SA950
R103
22
C104
1000PF
C105
100uF/16V
C106
100uF/16V
C102
10PF
C103
10PF
C101
33uF/16V
IC101
CXA1571M
LD
PD
PD1
PD2
VEE
F
E
VR
VC
NC
VCC
LD ON
RFI
RFO
FE
FE BIAS
TE
EI
EO
NC
R105 15K
R106
27K
SFR102
10KB
FB
SFR101
22KB
R107
22K
R104
15K
R152
470
RF
C108
100uF/16V
C109
333M
R121
1K
TE102
LD
MON
R101 91
FOCUS
TRACK
F-
T+
T-
F+
4K7
SFR103
TG
R124
27K
TE
IC102
CXA1372AQ
CB
CP
RFI
RFO
DVEE
TZC
TE
TDFCT
ATSC
FZC
FE
FDFCT
103M C110
103M C111
C112
222M
222M C113
220K
R125
104M C114
333M
C115
12K
R126
FG
RSFR104
4K7
C117
222M
104M C116
C118
47uF/16V
VC
SPINDLE
FEED
LIMIT SW
MECHA
CN6P20
TE103
R139
10
C128
0.1UF
R140
10
C129
0.1UF
C125
104M
C126
333M
R136
100K
C122
104M
C123
4.7uF/50V
C124
47uF/16V
C135
0.1UF
R150
10
C136
0.1UF
R151
10
R149
10K
R148
1K
IC103
LA6532M
RESET
VCC
C130
682M
R141
68K
R147
33K
C131
153M
R142
22K
C132
0.1uF
R146
10K
R143
33K
C133
560PF
R145
10K
R144
10K
C134
222M
IC104 BA6218
C127
100uF/16V
1N4002
D101
LOADING
CN5P20
CN101
CLOSE
OPEN

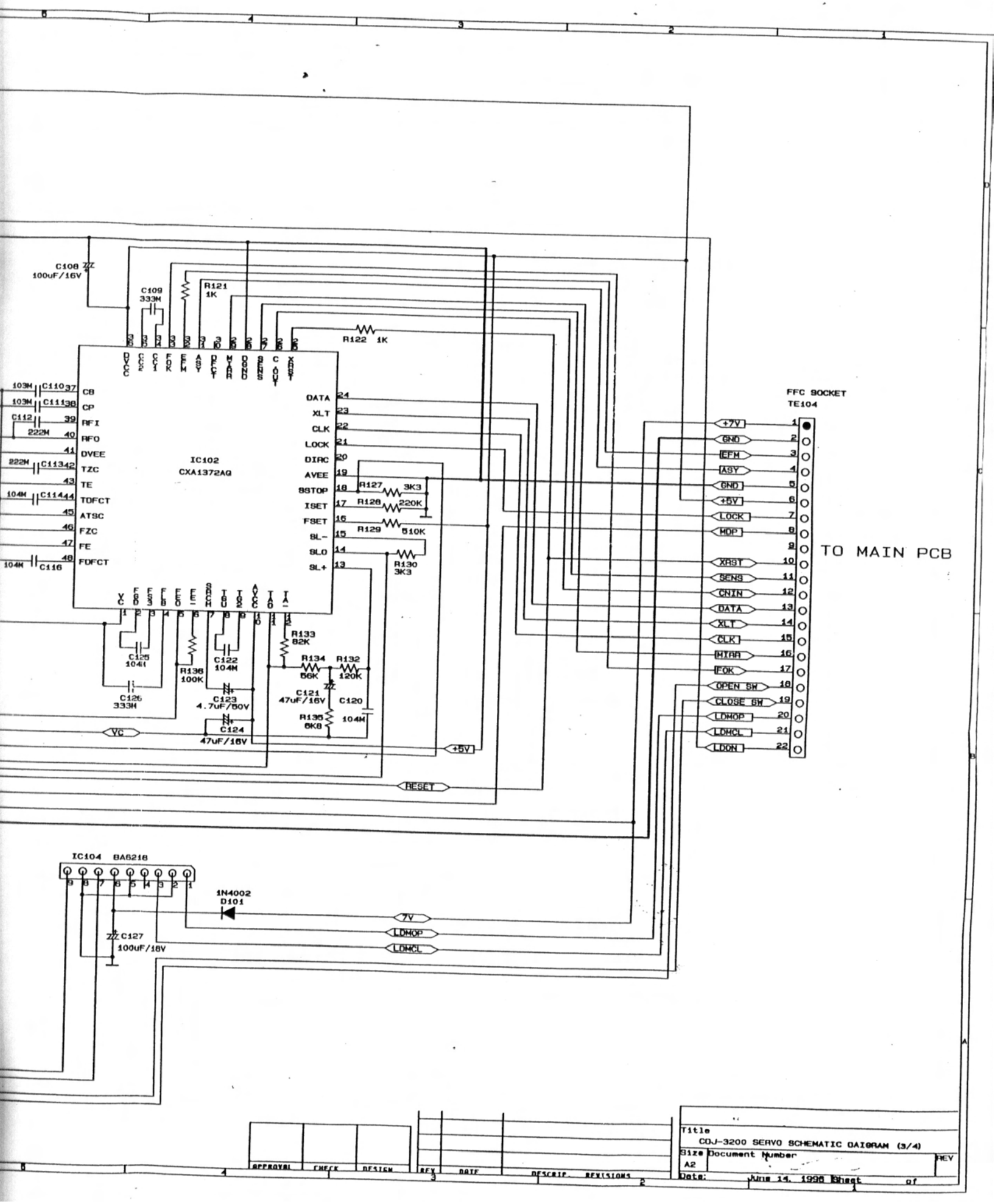

APPROVAL	CHECK	DESIGN	REV	DATE	DESCRIP.	REVISIONS

Title
CDJ-3200 SERVO SCHEMATIC DAIGRAM (3/4)

Size A2 Document Number REV

Date: June 14, 1996 Sheet of

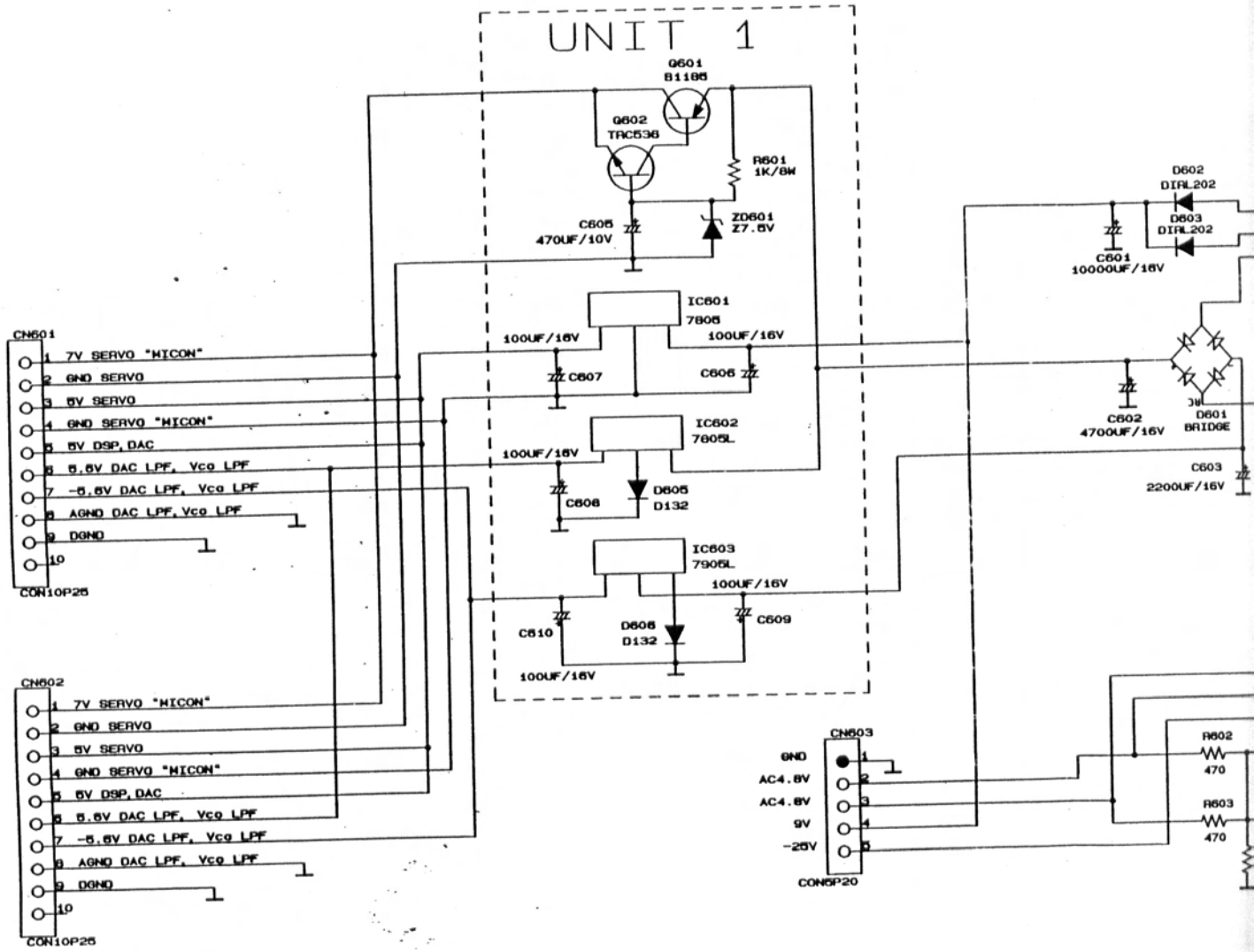

APPROVAL	CHECK

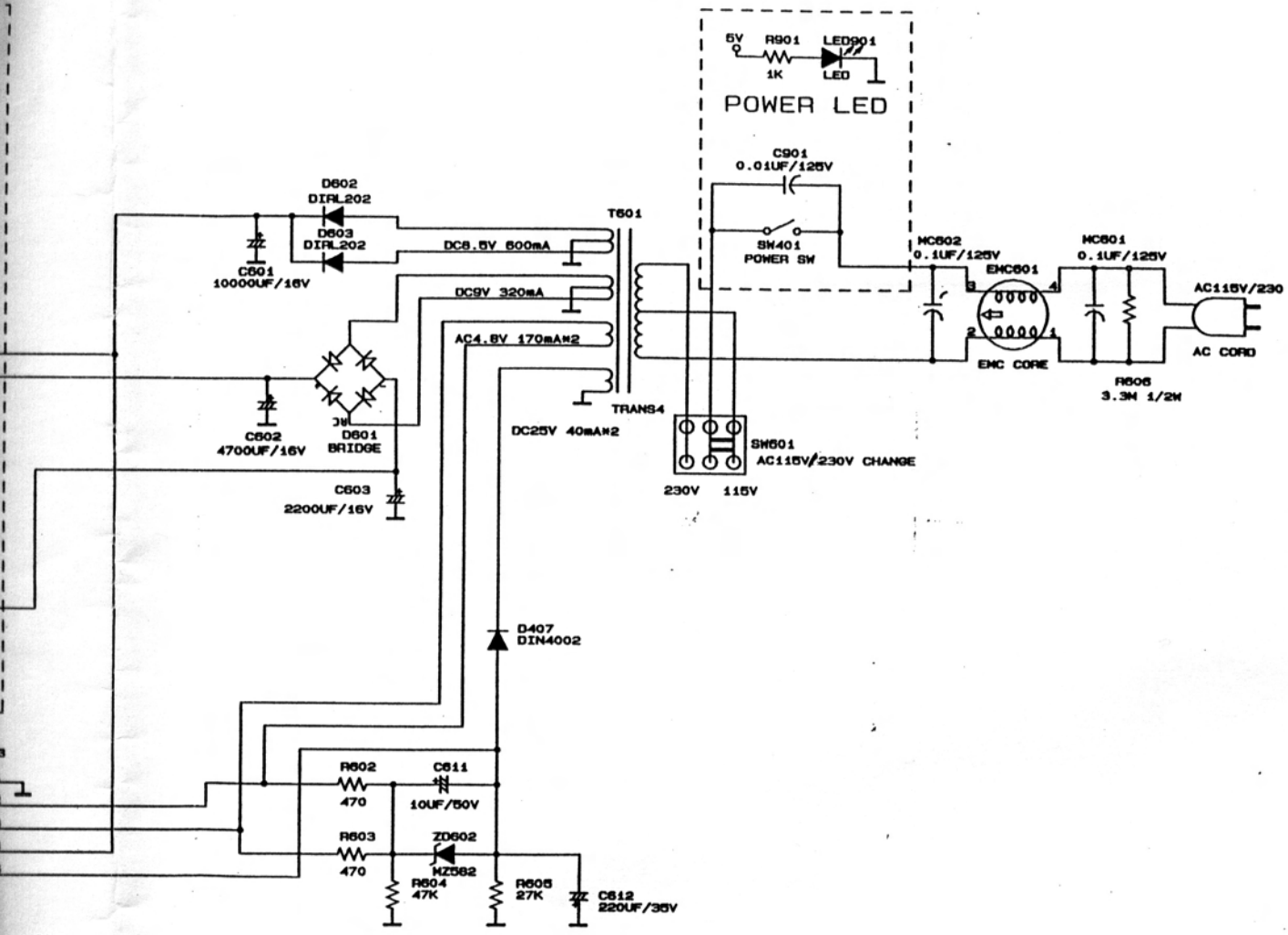

APPROVAL	CHECK	DESIGN	REV	DATE	DESCRIP	REVISIONS

Title: POWER SCHEMATIC DAIGRAM (4/4)

Size: A2 | Document Number: 9EM3U/9EM3U-P.SCH | REV

Date: March 24, 1997 | Sheet of