GoldStar

STEREO RADIO CDP CASSETTE RECORDER SERVICE MANUAL

CONTENTS

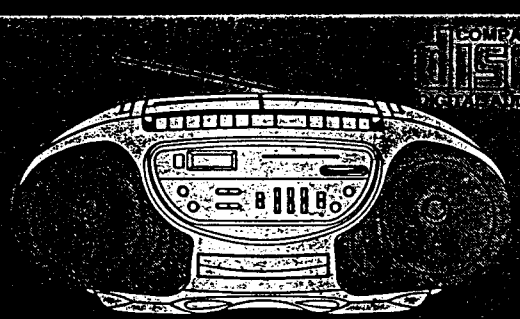

MODEL : CD-560A/S/L
CD-560SX
RCD 850

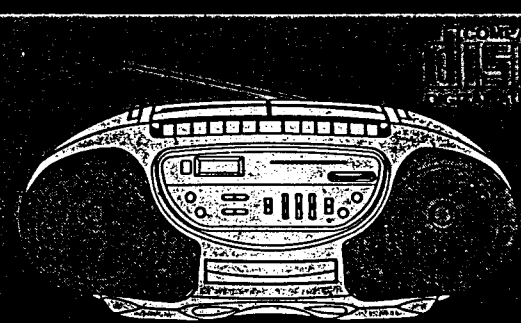

MODEL : CD-565A/S/L
RTC-252A

SPECIFICATION

General

Power Supplies	AC:Refer to the indicated voltage on the bottom of unit. DC: 12V (Eight "D"cell)
Dimensions	522 × 267 × 195mm (W × D × H)
Speaker	100mm × 2EA (3.2 Ω)
Output Power	3.5W x 2ch

Radio Performance

	AM(MW)	FM	LW	SW
Frequency Range	522~1,620kHz or 520~1,710kHz	87.5~108MHz or 64~109MHz	144~288kHz	5.7~18.5MHz
Usable Sensitivity	56dB	18dB	64dB	40dB
Signal to Noise Ratio	35dB	50dB	30dB	40dB
Image Rejection Ratio	30dB	30dB	25dB	6dB
I.F. Rejection Ratio	40dB	50dB	30dB	-
T.H.D.	2%	1.0%	-	-

Cassette Player Performance

Wow & Flutter	0.1%
Frequency Response	±3dB
Signal to Noise Ratio (P.B/R.P.)	45dB/40dB
Channel Separation	35dB
T.H.D.(P.B/R.P.)	1%/1.5%

Compact Disc Player Performance

Frequency Response	±3dB
Signal to Noise Ratio	65dB
T.H.D.	0.7%
Channel Separation	40dB
Access Time	3~6sec

NOTE: Design and specifications are subject to change without notice for improvement.

■ AM(MW) IF Adjustment

Oscilloscope:
Channel B connects to CN1 (R-ch/L-ch) and channel A connects to the body of the AM(MW) antenna coil (L1) through the dummy load.
Adjust maximum IF waveform on the oscilloscope.

Step	Dial Pointer Position	Oscilloscopes (kHz)	Adjustment
1	High frequency	455	T1
2	Repeat Step 1 serval times.		

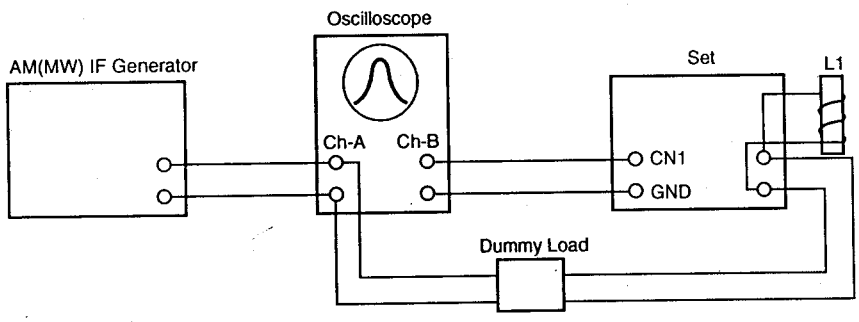

Figure 1. AM(MW) IF Adjustment Connection Diagram

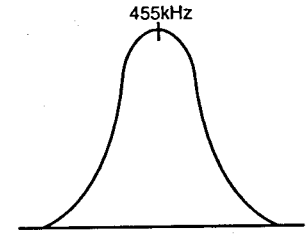

• Figure 2. AM(MW) IF Curve

■ AM(MW) RF Adjustment

Signal Generator:
Connects to the AM(MW) antenna coil(L1) through the loop antenna.
Adjust for maximum indication on the SSVM or for maximum waveform on the scope.

Step	Dial Pointer Position	SG Output (kHz)	Adjustment
1	Lowest frequency	515	L5
2	Highest frequency	1,630	VC1 (CT2)
3	Repeat Steps 1 and 2 serveral times.		
4	600kHz	600	L1
5	1,400kHz	1,400	VC1 (CT1)
6	Repeat Steps 4 and 5 several times.		

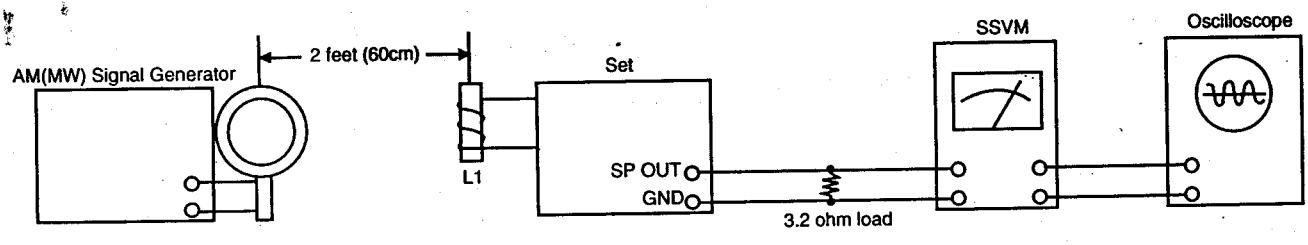

Figure 3. AM(MW) Band/Tracking Adjustment Connection Diagram

■ FM RF Adjustment

Signal Generator:
Connects to the FM antenna through the dummy load.
Adjust for maximum indication on the SSVM or for maximum waveform on the scope.

Step	Dial Pointer Position	SG Output (MHz)	Adjustment
1	Lowest frequency	87 or 64	L4
2	Highest frequency	109	VC1 (CT4)
3	Repeat Steps 1 and 2 serveral times.		
4	90MHz or 68MHz	90 or 68	L3
5	106MHz	106	VC1 (CT3)
6	Repeat Steps 4 and 5 several times.		

■ LW RF Adjustment

Signal Generator:
Connects to the LW antenna through the dummy load.
Adjust for maximum indication on the SSVM or for maximum waveform on the scope.

Step	Dial Pointer Position	SG Output (kHz)	Adjustment
1	Lowest frequency	140	L6
2	Highest frequency	290	TC6
3	Repeat Steps 1 and 2 serveral times.		
4	160kHz	160	L1
5	260kHz	260	TC5
6	Repeat Steps 4 and 5 several times.		

■ SW RF Adjustment

Signal Generator:
Connects to the SW antenna through the dummy load.
Adjust for maximum indication on the SSVM or for maximum waveform on the scope.

Step	Dial Pointer Position	SG Output (MHz)	Adjustment
1	Lowest frequency	5.7	L6
2	Highest frequency	18.5	TC6
3	Repeat Steps 1 and 2 serveral times.		
4	6.3MHz	6.3	L2
5	16MHz	16	TC5
6	Repeat Steps 4 and 5 several times.		

DECK MECHANISM ADJUSTMENT

■ Azimuth Adjustment

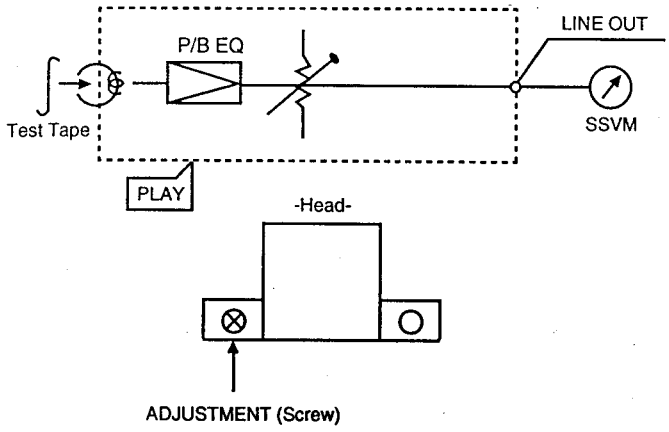

Input	Adjust for	Adjustment
MTT-114 (10 kHz)	L/R output	Head adjustment screw azimuth

· Tape Selector: Normal play

■ Recording Bias Frequency Adjustment

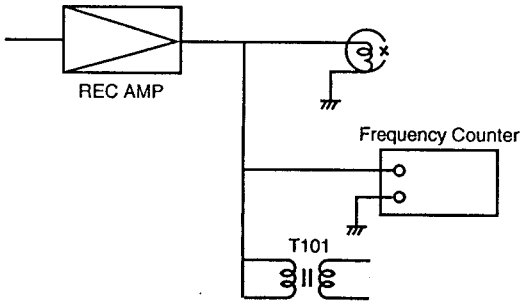

Input	Adjust for	Adjustment	RIF S/W POSITION
No signal	65kHz	T101	1

■ Tape Speed Adjustment

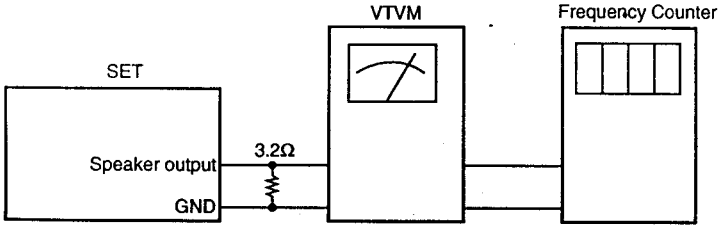

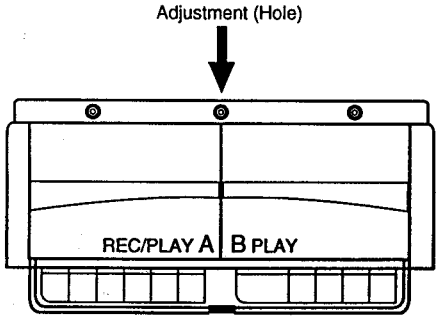

TEST TAPE	SET MODE	Adjust for	Adjustment
MTT-111	PLAY	3kHz (±3%)	VR104

■ Tape Head and Capstan Cleaning

Whenever a unit is brought in for service or repair, clean the tape heads, capstan drive shaft, and other tape handing surfaces to insure proper tape handling and optimum frequency response. Use a cotton swab dipped in head cleaner or denatured alcohol to clean all tape handling surfaces. Wipe dry with a soft, clean cloth.

■ Tape Head Demagnetization

Do not use magnetized tools near the tape heads, since they can magnetize the heads. After long periods of use, the heads will retain a small amount of residual magnetism. A magnetized head will result in loss of high-frequency response and increased noise. Use a standard tape head demagnetizer and follow the instructions supplied with it to demagnetize the heads.

■ Equipment Required

1. Oscilloscope

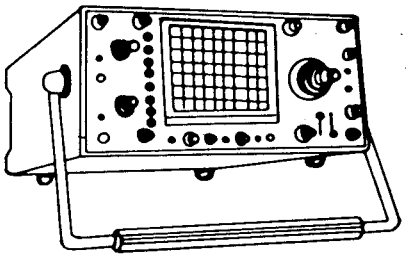

2. Test disc
SONY TYPE 4: YEDS-18
YEDS-43

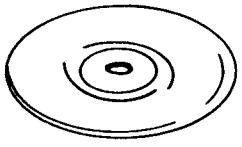

3. Jitter meter

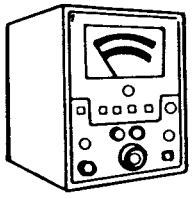

4. Low frequency oscillator

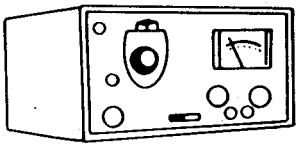

5. Digital frequency counter

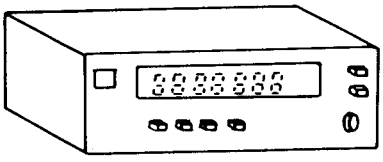

6. 10:1 Oscilloscope probe
1:1 Oscilloscope probe

■ Focus & Tracking Gain Adjustment Jig

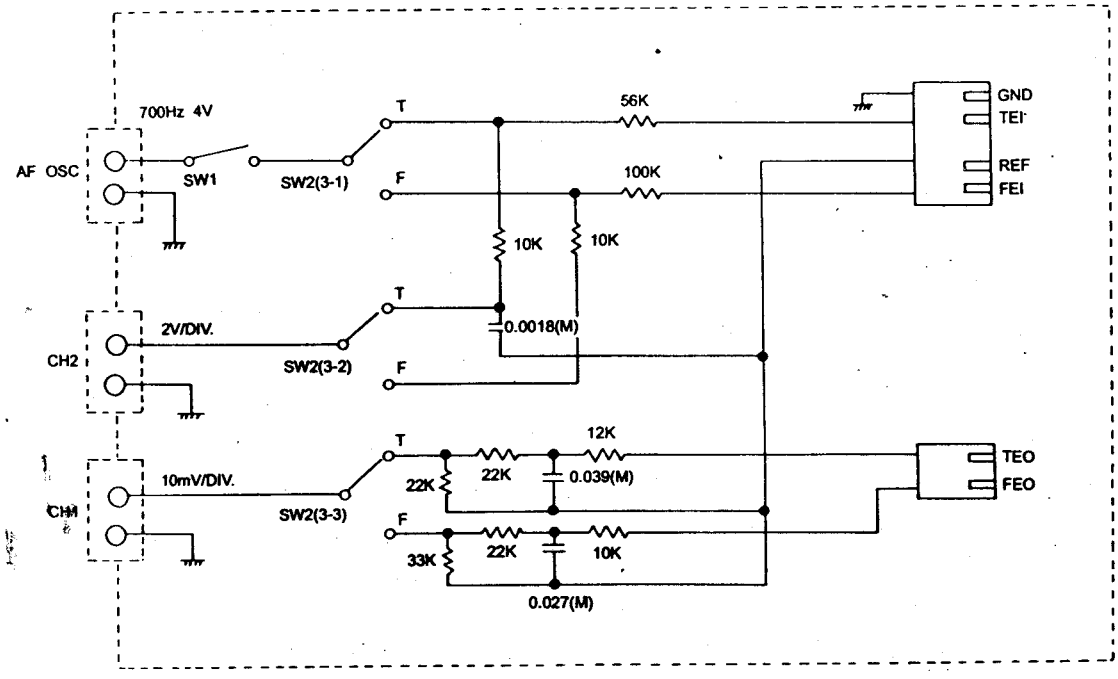

■ E.F Balance Adjustment (Tracking Balance Adjustment)

1. Insert the test disc and be sure the unit is in stop mode.
2. Connect the oscilloscope to TP506 (TEO) and TP506 (REF).
3. Short circuit TP504 (TES) and TP504 (REF).
4. Play the middle range of the disc (YEDS-18).
5. Adjust VR502 so that the amplitude above and below the zero DC level becomes equal (amplitude A=B)
6. Open circuit TP504 (TES) and TP504 (REF).

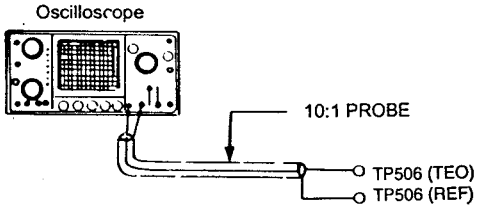

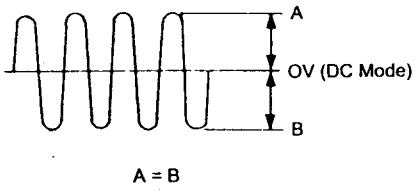

■ Focus Offset Adjustment (Without Jitter Meter)

1. Insert the disc and press the PLAY/PAUSE button (YEDS-18).
2. Connect the oscilloscope to TP501 (RF) and TP501 (REF).
3. Adjust the focus offset volume (VR501) so that the eye-pattern is clear and the waveform (Vp-p) is maximum.
4. When confirming eye-pattern, you have to use 10:1 probe.

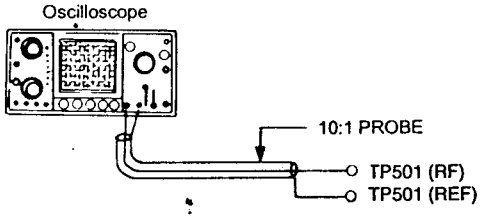

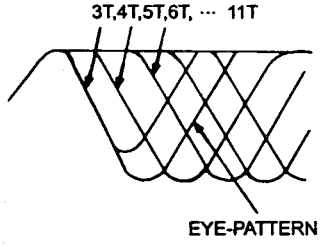

EYE-PATTERN

■ Focus Gain Adjustment (With Jig)

1. Connect gain adjustment jig to test point on the CD P.C. board pin to pin.
2. Connect audio frequency oscillator to A.F. OSC terminal and GND on the gain adjustment jig.
3. Connect oscilloscope to CH1, CH2 and GND on the gain adjustment jig and put oscilloscope into X-Y mode.

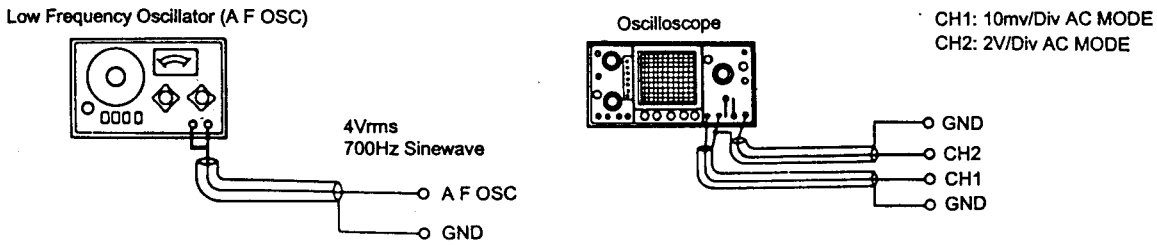

4. Insert test disc and put unit into play mode.
5. Set switch SW2 on the gain adjustment jig to the position of "T"
6. Set switch SW1 to ON.
7. Adjust VR504 so that the waveform on the oscilloscope becomes like below.

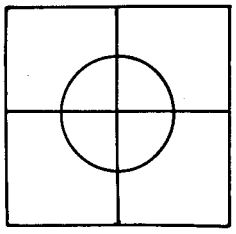

Good adjustment
(Optimum focus gain)

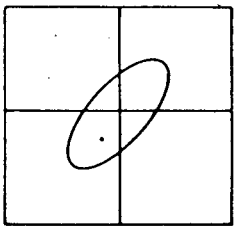

Bad adjustment
(In the case of low focus gain)

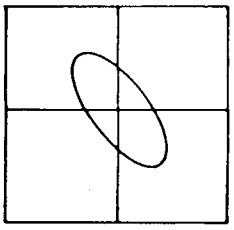

Bad adjustment
(In the case of high focus gain)

■ Focus Gain Adjustment (Without Jig)

1. Insert test disc and put unit into play mode (YEDS-43).
2. Connect the oscilloscope to IC505 Pin ① and Pin ②.
3. Adjust VR503 so that the waveform on the oscilloscope becomes like below.

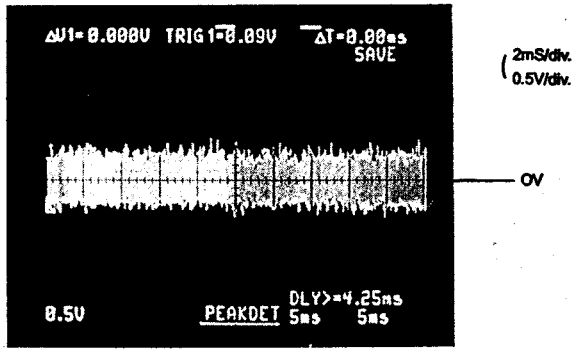

■ Tracking Gain Adjustment (With Jig)

1. Connect gain adjustment jig to test point on the CD P.C. board pin to pin.
2. Connect audio frequency oscillator to A.F. OSC terminal and GND on the gain adjustment jig.
3. Connect oscilloscope to CH1, CH2 and GND on the gain adjustment jig and put oscilloscope into X-Y mode.

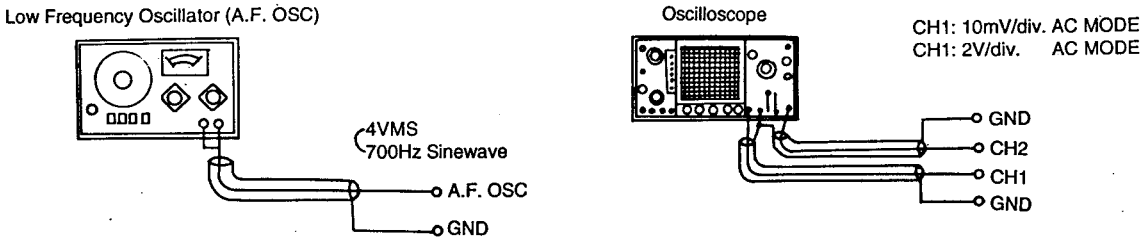

4. Insert test disc and put unit into play mode.
5. Set switch SW2 on the gain adjustment jig to the position of "F".
6. Set switch SW1 to ON.
7. Adjust VR503 so that waveform on the oscilloscope becomes like below.

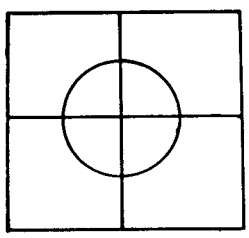

Good Adjustment
(Optimum tracking gain)

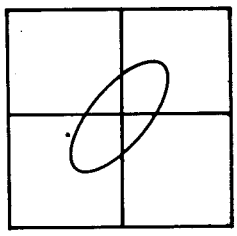

Bad adjustment
(In the case of Low tracking gain)

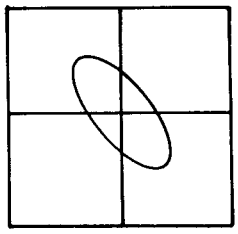

Bad adjustment
(In the case of high tracking gain)

■ Tracking Gain Adjustment (Without Jig)

1. Insert test disc and put unit into playmode (YEDS-43).
2. Connect the oscilloscope to IC 505 Pin ㉖ and ㉗.
3. Adjust VR504 so that the waveform on the oscilloscope becomes like below.

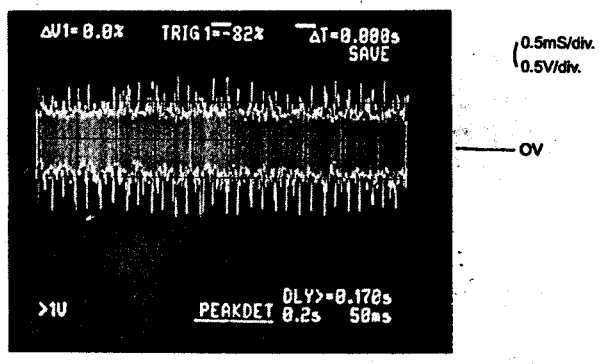

CIRCUIT DESCRIPTIONS

■ IC501 KA9220

1. RF +1 SSP FOR CDP

The KA9220 is a 1-Chip BICMOS integrated circuit to perform the function of RF AMP and SSP (Servo Signal Processor) for Compact disc player applications. It consists of RF signal processing, focus servo, tracking servo, sled servo control, EFM detecting and automatic power control circuits.

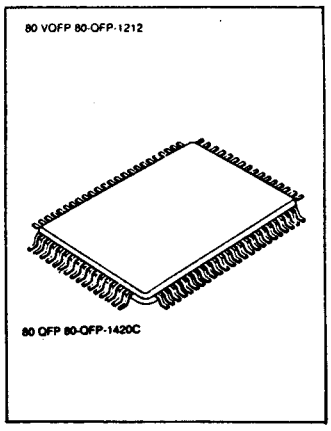

2. FEATURES

- RF Amplifier
- Focus Error Amplifer
- Tracking Error Amplifier
- Mirror Detector
- Focus ok Detector
- EFM Comparator and Auto-Asymmetry control Amplifier
- Defect Detector for improvement to playability
- Built-in APC (Automatic power control) Amplifier for P-sub and N-sub of the Laser Diode
- Servo Control functions; (Focus, Tracking, sled, spindle servo control)
- Built-in Autosequencer
- Anti-shock function
- The function of preventing sled run away
- Double speed operation available
- Operating supply Voltage range: 3.4 ~ 5.5V

ORDERING INFORMATION

Device	Package	Operating Temperature
KA9220	80 QFP	−20°C ~ +75°C
KA9220Q	80 VQFP	

3. BLOCK DIAGRAM

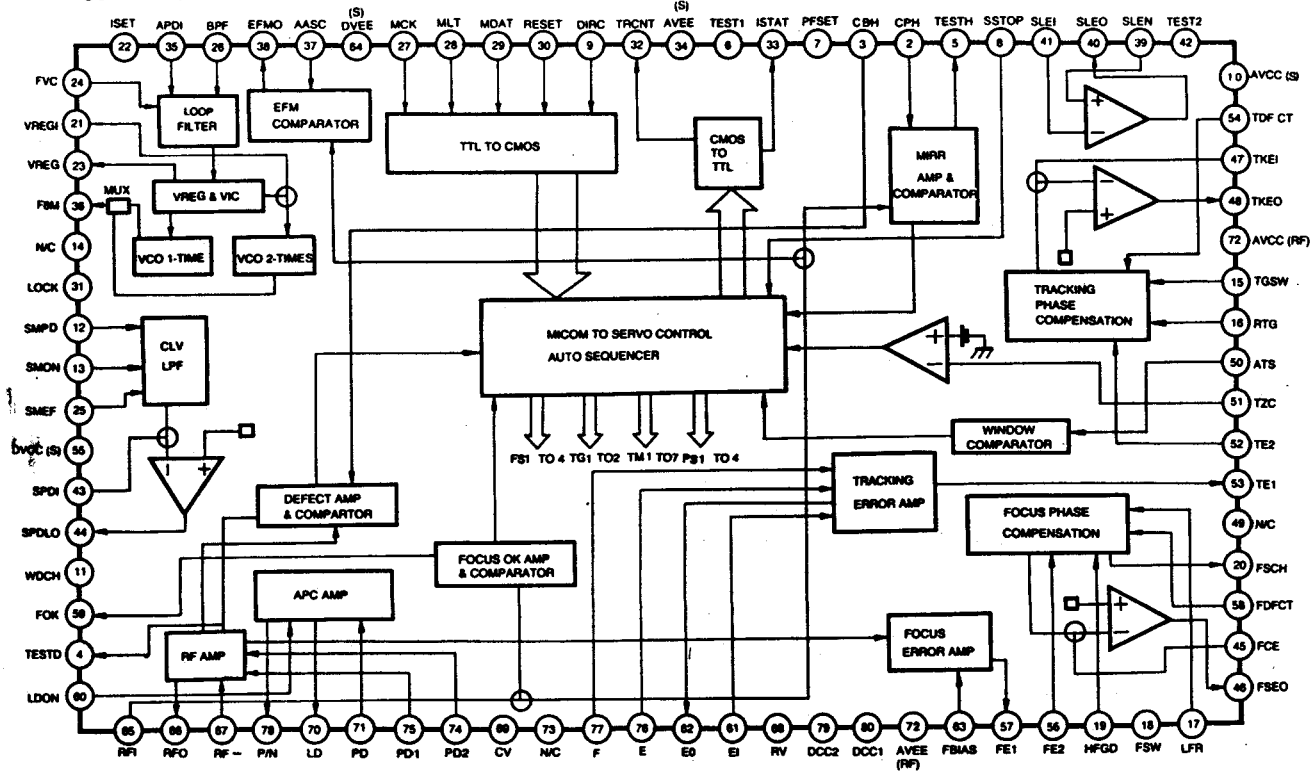

4. PIN DESCRIPTION

Pin No.	System	Description
1	AVEE (R)	Analog negative power supply input pin for RF part
2	CPH	Capacitor connection pin of mirror hold.
3	CBH	Capacitor connection pin of defect bottom-hold
4	TESTD	Defect test pin
5	TESTM	Mirror test pin
6	Test1	Input pin for test
7	PFSET	Peak frequency setting pin for focus, tracking compensation and fc (cut off frequency) of CLV LPF.
8	SSTOP	Check the position pin of pick-up whether inside or not.
9	DIRC	Direct 1 Track Jump Control Pin
10	AVCC (S)	Analog positive power supply input pin for SERVO part.
11	WDCH	Auto-sequencer clock-input pin (Normal speed = 88.2KHz, Double speed = 176.4KHz)
12	SMPD	Connection pin of DSP SMPD
13	SMON	Connection pin of DSP SMON, spindle servo ON at "H"
14	N/C	No connection pin
15	TGSW	Providing time constant to change the high frequency tracking gain
16	RTG	Capacitor connection pin to switch the tracking gain of high frequency
17	LFR	Capacitor connection pin to perform rising low bandwidth of focus servo loop
18	FSW	High frequency gain of focus servo loop can be changed by FS3 switch ON or OFF
19	HFGD	Reducing high frequency gain with capacitor connected between pin18 and pin19.
20	FSCH	Time constant external pin to generate focus search waveform
21	VREGI	External regulator voltage input pin for VCO
22	ISET	Determing the peak value of focus search, track jump and SLED kick
23	VREG	3.5V Regulator output pin
24	FVC	Pin connected external resistor to adjust free running frequency of VCO
25	SMEF	Providing an external LPF time constant of CLV SERVO Loop
26	BPF	Providing time constant for Loop filter of VCO
27	MCK	Clock input pin from micom
28	MLT	Latch input pin from micom
29	MDAT	Data input pin from micom
30	RESET	Reset input pin from micom, reset at "L"
31	LOCK	Pin for operation of the sled runaway prevention function at "L"
32	TRCNT	Track count output pin
33	ISTAT	Internal status output pin
34	AVEE (S)	Analog negative power supply input pin for SERVO part
35	APDI	Input pin of DSP phase comparison output (PHAS)
36	F8M	Output pin of analog VCO Normal speed = 8.64 MHz, Double speed = 17.28MHz
37	AASC	Auto-Asymmetry control input pin
38	EFMO	EFM comparator output pin
39	SLEN	Non-inverting input pin of SLED SERVO amplifier
40	SLEO	Output pin of SLED SERVO amplifier
41	SLEI	Inverting input pin of SLED SERVO amplifer
42	TEST2	Test input pin to change speed mode Normal speed = "H", Double speed = "L"
43	SPDI	Inverting input pin of spindle servo amplifier
44	SPDLO	Spindle servo amplifier output pin
45	FCE	Inverting input pin of focus servo complifier.

Pin No.	Symbol	Description
46	FSEO	Output pin of focus servo amplifer
47	TKEI	Non-inverting input pin of tracking servo amplifier
48	TKEO	Output pin of tracking servo amplifier
49	N/C	No connection
50	ATS	Anti-shock input pin
51	TZC	Tracking Zero Crossing input pin
52	TE2	Tracking Error Servo input pin
53	TE1	Output pin of tracking Error Amplifer
54	TDFCT	Capacitor Connection pin for Defect Compensation of tracking servo
55	DVCC (S)	Digital positive power supply input pin for servo part
56	FE2	Focus error servo input pin
57	FE1	Output pin of focus error Amplifer
58	FDFCT	Capacitor connection pin for defect compensation of focus servo
59	FOK	Output pin of Focus ok comparator.
60	LDON	Laser diode ON/OFF control pin
61	EI	Feedback input pin of E I-V amplifier
62	EO	Output pin of E I-V Amplifier
63	FBIAS	Bias pin of non-inverting input of focus error amplifier
64	DVEE (S)	Digital negative power supply input pin for servo part
65	RFI	Output Signal of RF summing amplifier is inputed through capacitor
66	RFO	Output pin of RF summing amplifier
67	RF−	Inverting input pin of RF summing amplifier
68	RV	Output pin of (AVCC + AVEE)/2 Voltage
69	CV	Bias input pin of Center Voltage buffer
70	LD	Output pin of APC amplifier
71	PD	Input pin of APC amplifier
72	AVCC (R)	Analog positive power supply input pin for RF part
73	N/C	No connection
74	PD2	INverting input pin of RF I-V AMP2
75	PD1	Inverting input pin of RF I-V AMP1
76	F	Inverting input pin of F I-V AMP
77	E	Inverting input pin of E I-V AMP
78	P/N	Selecting P-sub/N-sub of Laser diode
79	DCC2	Defect bottom-hold output is inputed through capacitor
80	DCC1	Output pin of defect bottom-hold

■ DESCRIPTION OF FUNCTION

1. RF AMP BLOCK

1) Description

The KA9220 is designed for 3-spot type optical pick-up assembly. The photo detector is composed of 6 light sensor (A through F). The photo detector A, B, C and D detect audio modulation signal on the disc and generate focus error signal.
The E and f photo detector generate tracking error signal.

2) RF AMPLIFIER

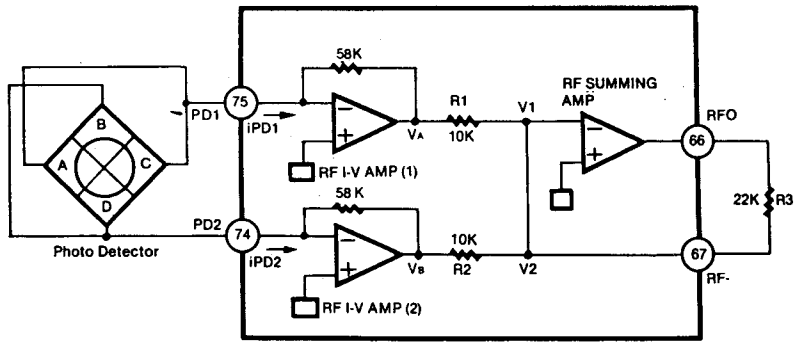

RF I-V AMP (1) and RF I-V AMP (2) are converted current of PD1 (A + C) and PD2 (B + D) through the 58 Kohm internal resistor into Voltage.
Furthermore, It is added to RF Summing amplifier.
This signal (A + B + C + D) is outputed from RFO (Pin66).
The output Voltage is as follow.

$$V_{RF} = -R3 \times (iPD1 + iPD2)$$
$$= -R3 \times \left(\frac{V_1}{R_1} + \frac{V_2}{R_2}\right)$$
$$= -22K \times \left(\frac{V_1}{10K} + \frac{V_2}{10K}\right)$$
$$= -2.2 \times (V_1 + V_2)$$

3) TRACKING ERROR AMPLIFIER

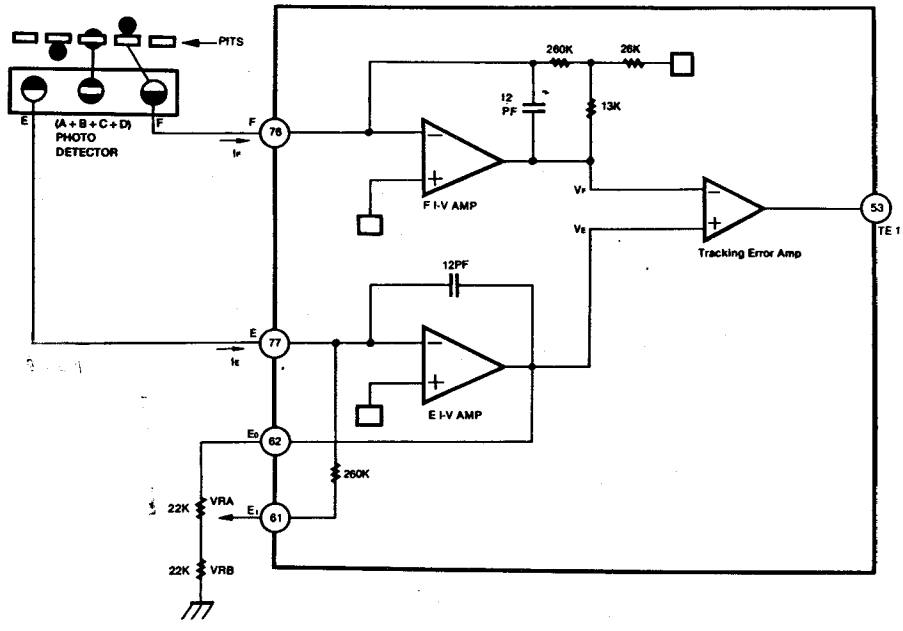

The output of photo detector F is directed to the (−) input of F I-V AMP and out of photo detector E is directed to the (−) input of E I-V AMP.
These input signals are current.
E I-V AMP and F I-V AMP are converted into voltage from the current signal. When correct tracking, two input (V_F, V_E) Signals are equal. The occurence of tracking error is due to difference between F I-V AMP output and E I-V AMP output.

$$V_F = I_F \times \left[\left(\frac{260K \times 13K}{26K} \right) + 273K \right] = I_F \times 403K$$

$$V_E = I_E \times \left[260K \times \left(\frac{V_{RA}}{V_{RB}} + 22K \right) + (V_{RA} + 260K) \right]$$

accordingly, $V_{TE1} = (I_E - I_F) \times 1290K$

4) FOCUS ERROR AMPLIFIER

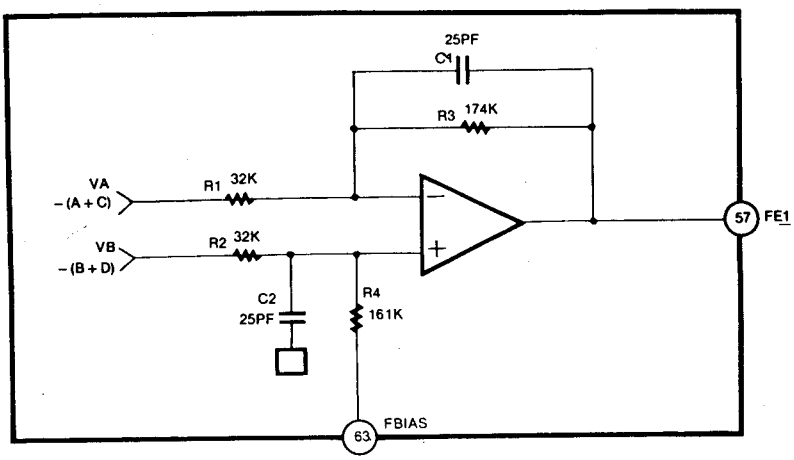

The focus error amp is the difference between RF I-V AMP (1) output V_A and RF I-V AMP (2) output V_B.
This two (−V_A, V_B) Signals are each applied to the (−) and (+) input of focus error amp.
As the result of differential voltage, Focus error signal is appeared at FE1 Pin (Pin57).
This FE1 Output Voltage (low frequency) becomes (A + C)-(B + D), as follow $V_{FE1} = R_1/R_3 (V_B - V_A)$
The focus error voltage is directed to the focus servo Block, to maintain optimum focusing at all times.

5) FOCUS OK GENERATION CIRCUIT

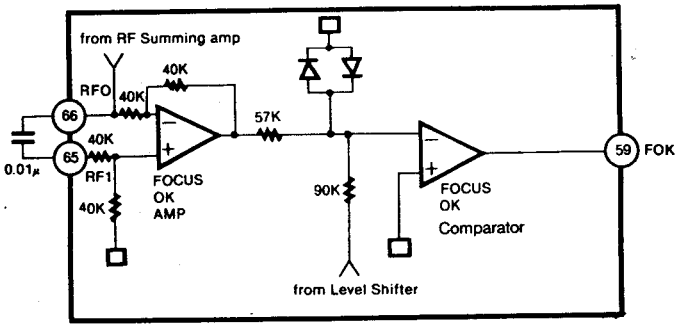

The focus ok circuit generates a timing window to monitor focus search status of focus servo.
When RFO (Pin 66) Voltage is more than −0.37V, the focus OK circuit is inverted. Time constant of HPF in EFM comparator and In mirror circuit and that of LPF in focus ok circuit are determined by Capacitor (0.01μF) between RFI and RFO.

6) MIRROR CIRCUIT

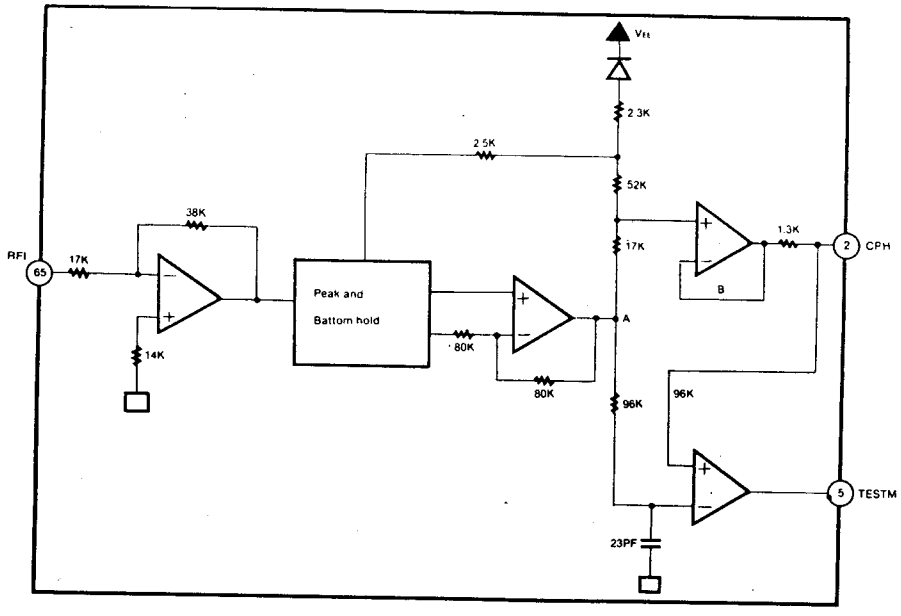

After RF input signal is amplified by Mirror amp, it is held in Bottom and peak hold circuit. Such a hold is determined by the time constant. Envelope signal A (demodulated to DC) is two-thirds of the peak value of this signal the time constant of A signal is held when it is larger than that of B signal.
Therefore, mirror output is; Low at track on disc, High at between tracks on disc, High when detect is detected.

7) DEFECT CIRCUIT

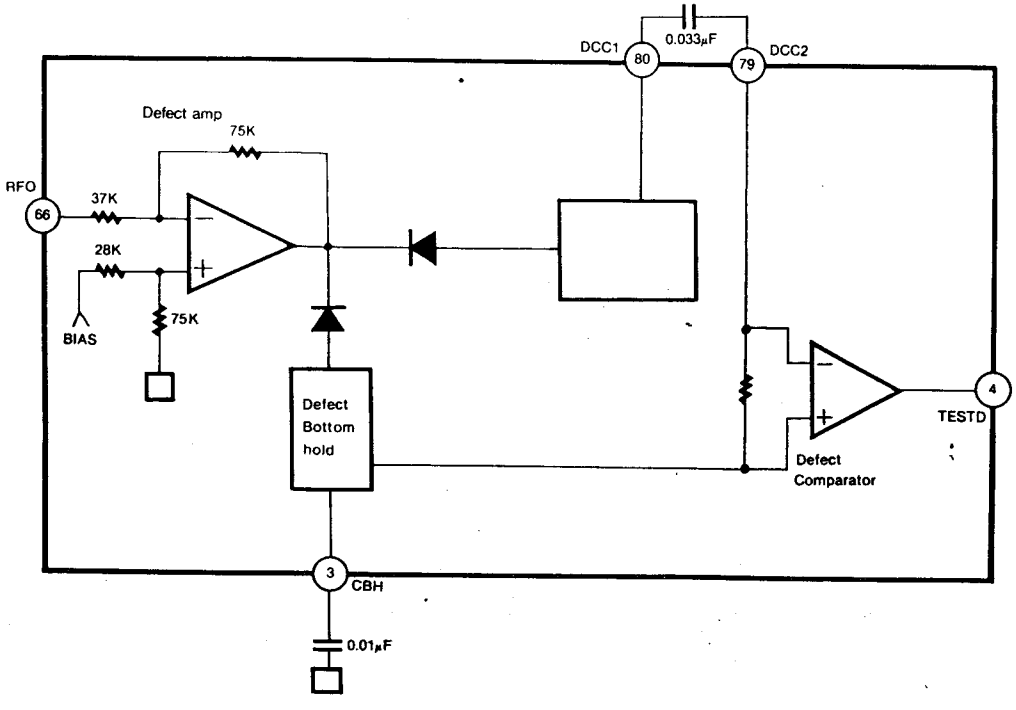

The bottom hold has had two time constant of long and short, after than the RFI signal inverted.
The short time constant of bottom hold is generated shorter than 0.1msec of disc mirror defect and long time constant is generated by previous mirror level. Mirror defect detection signals are generated by differentiate on Capacitor Coupling and then transfer level.

8) EFM COMPARATOR

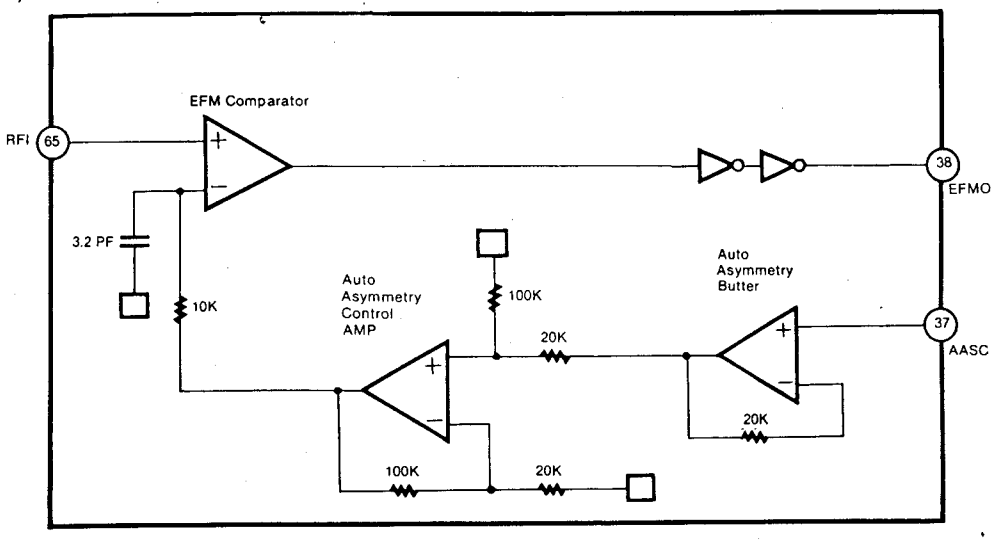

The EFM Comparator Converts a RF Signal into a binary signal. A processing of disc production is occured disproportion because of modification of disc.
That is not reduced by only Ac coupling.
The reference voltage of EFM comparator is controlled utilizing the fact that the generation-probability 1, 0 is 50% (duty) in the binary EFM signal.

9) APC (AUTOMATIC POWER CONTROL) CIRCUIT

A. +5V Single Power Supply P-sub Laser

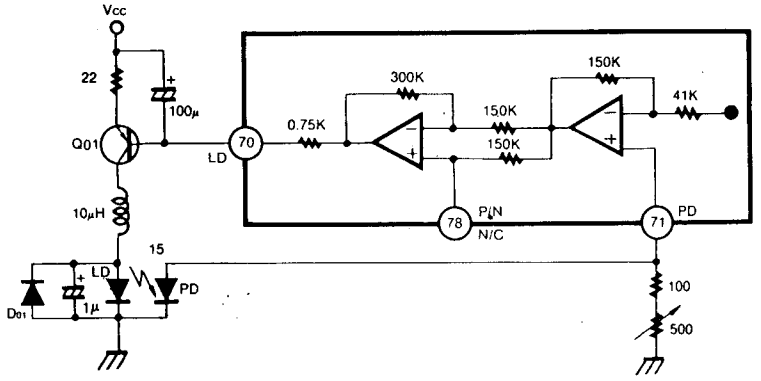

B. +5V Single Power Supply N-sub Laser

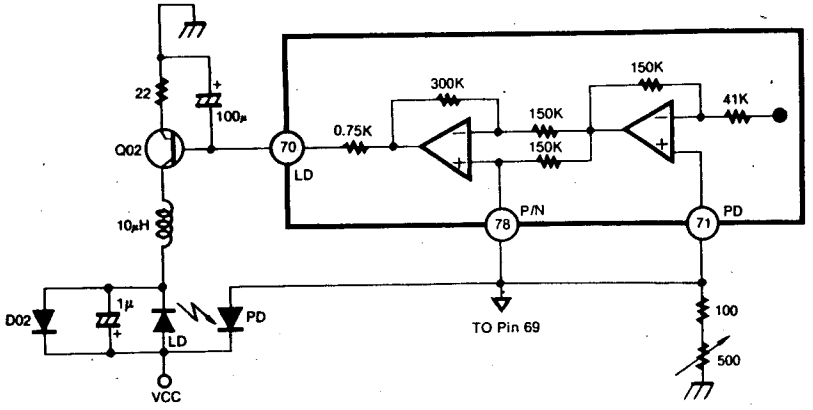

As the Laser diode has had large negative temperature characteristic when does something for regularly supply current on laser diode. Therefore, the output on processing monitor photo diode, must be a controlled current for getting regularly output power. Thus APC circuit is composed, this circuit uses for P-sub and N-sub of laser diode, single power supply operation.

■ SERVO BLOCK

1) FOCUS SERVO LOOP

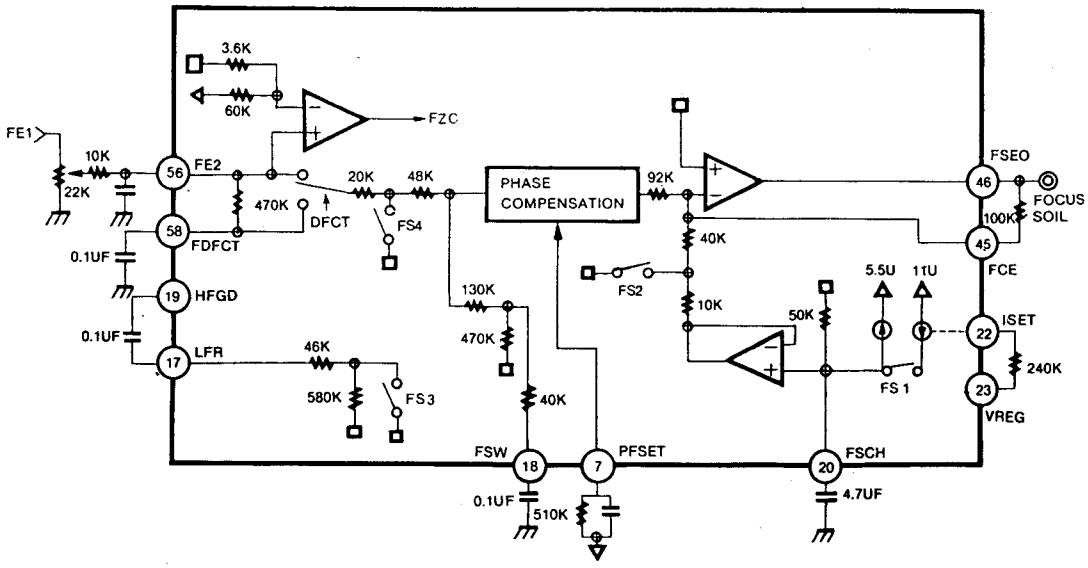

When the defect signal is detected, the focus servo Loop is isolated.
At this time, the focus servo error output is outputed through low pass filter formed by connecting a capacitor (0.1μF) between the built-in 470KΩ resistor and FDFCT Pin (Pin58). Accordingly, the focus error output is held as just before error value durling the defect.
The peak frequency of the focus phase compensation is at about 1.2KHz when the resistor connected to PFSET (Pin7) is 510KΩ. It is inversely proportional to the resistor connected to the Pin 7.
While the focus search is operating, the FS4 switch is ON and then Focus error signal is isolated, accordingly it is outputed by FSEO Pin (Pin46).
When the FS2 switch is ON, the focus servo Loop is on and then the focus error is outputed through the focus servo Loop.

2) TRACKING AND SLED SERVO LOOP

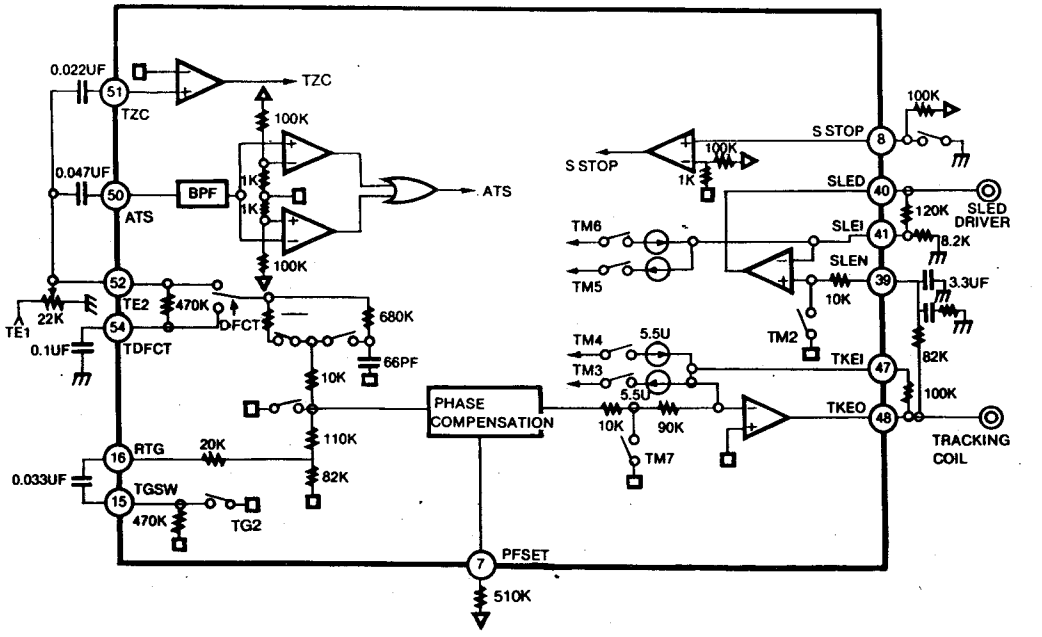

The capacitor across RTG (Pin16) and TGSW (Pin15) reduce high frequency gain when the TG2 switch is OFF.
The Peak frequency of the tracking phase compensation is at about 1.2KHz when the resistor connected to PFSET (Pin7) is 510KΩ. It is inversely proportional to the resistor connected to the Pin 7.
The tracking error signal is switched into low pass filter route formed by connecting a capacitor between the built-in resistor at DFCT (470KΩ) and Pin54 (TDFCT) as for focus error signal.

3) SPINDLE SERVO AND LOW PASS FILTER

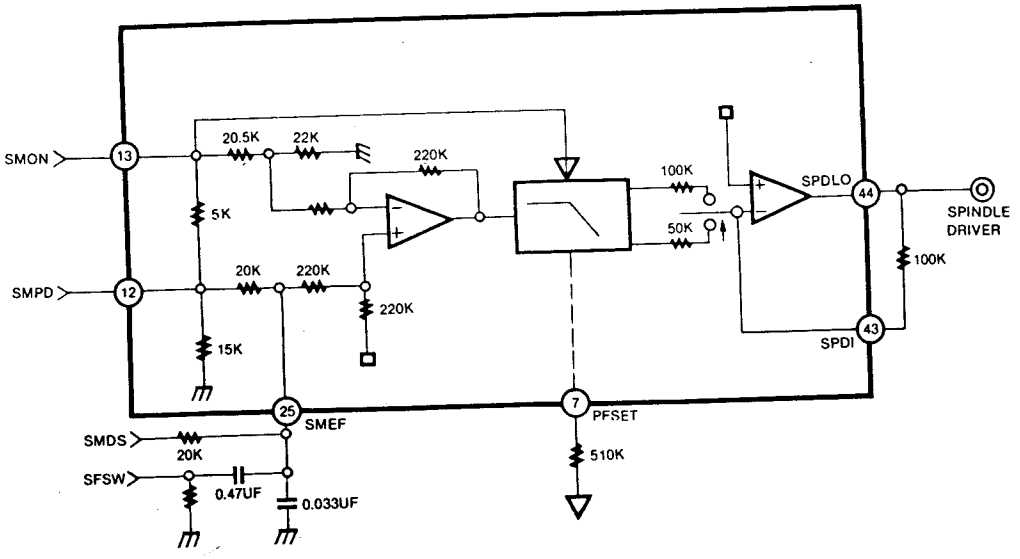

The 0.033μF and the 20KΩ connected to Pin25 (SMEF) form the 200Hz LOW Pass filter.
And the carrier component of spindle servo error signals is eliminated.
In the CLV-S mode, SMEF becomes L and Pin25 LPF fc lowers, strengthening the filter further.

■ IC503 KS9282

1. DSP + 1DAC (16BIT) FOR CDP

The KS9282 is a CMOS integrated circuit designed for the Digital Audio Signal processor of the CDP (Compact Disc Player) application. It is a Monolithic IC that builts-in 16-Bit Digital to Analog Converter to add to the conventional DSP function.

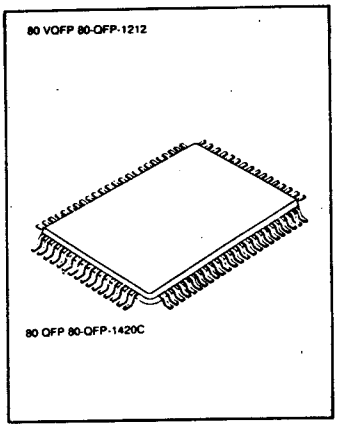

2. FEATURES

- EFM Data Demodulation
- Built-in fram sync detection, protection and Injection circuit
- Correction of C1, C2 error
- Interpolation
- 8fs oversampling Digital filter (51th+13th +9th)
- Subcode data serial output
- CLV Servo Controller
- Tracking Counter
- Micom interface
- Built-in 16K SRAM
- Digital Audio out
- Double speed available
- Built-in Digital PLL
- Built-in 16-Bit D/A converter
- Single power supply: + 5V

ORDERING INFORMATION

Device	Package	Operating Temperature
KS9282	80 QFP	– 20°C ~ + 75°C
KS9282Q	80 VQFP	

3. BLOCK DIAGRAM

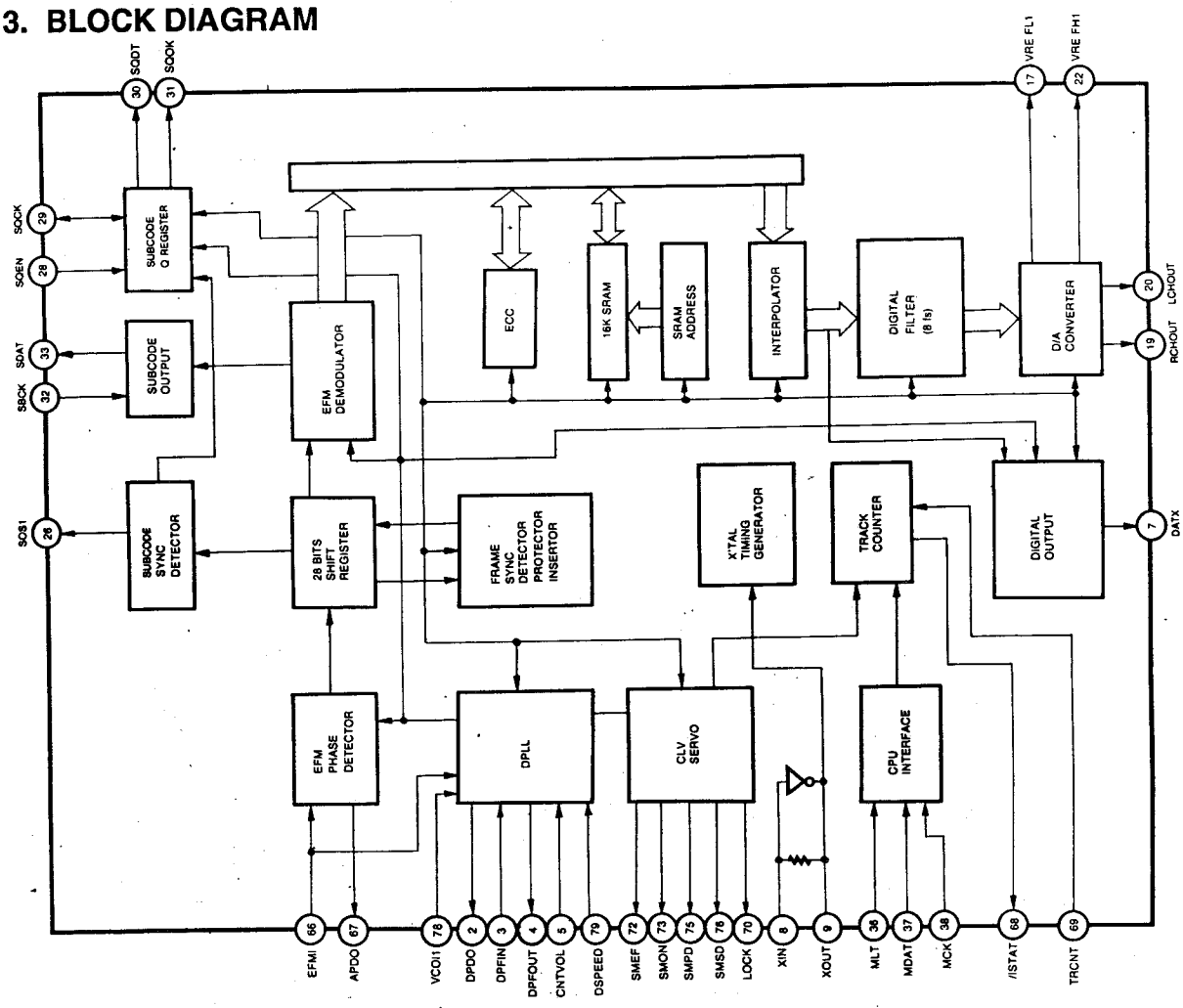

4. PIN CONFIGURATION

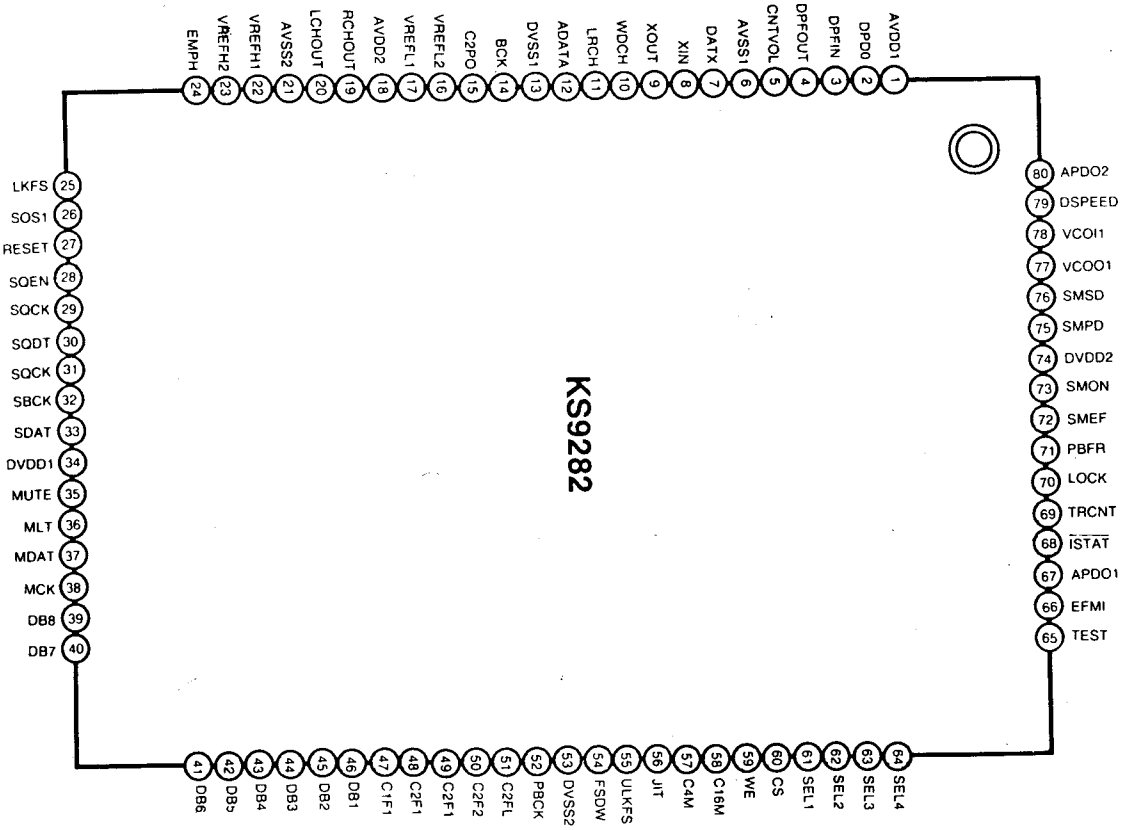

5. PIN DESCRIPTION

Pin No.	Symbol	I/O	Description
1	AVDD1		Aanlog Vcc1
2	DPDO	O	Charge pump output for master PLL
3	DPFIN	I	Filter input for master PLL
4	DPFOUT	O	Filter output for master PLL
5	CNTVOL	I	VCO control voltage for master PLL
6	AVSS1		Analog Ground 1
7	DATX	O	Digital audio output
8	XIN	I	X-tal oscillator input
9	XOUT	O	X-tal oscillator output
10	WDCH	O	Word clock of 48 bit/SLOT (Normal speed = 88.2 KHz, Double speed = 176.4KHz)
11	LRCH	O	Channel clock of 48 bit/SLOT (Normal speed = 44.1KHz, Double speed = 88.2KHz)
12	ADATA	O	Serial audio data output of 48 bit/SLOT (MSB first)
13	DVSS1		Digital Ground 1
14	BCK	O	Audio data Bit clock for 48 bit/SLOT (Normal speed = 2.1168KHz, Double speed = 4.2336KHz)
15	C2PO	O	C2 pointer for output audio data
16	VREFL2	I	Input terminal 2 of reference voltage "L" (Floating)
17	VREFL1	I	Input terminal 1 of reference voltage "L" (GND Connection)
18	AVDD2		Analog VCC2
19	RCHOUT	O	Right-Channel audio output through D/A Convertes
20	LCHOUT	O	Left-channel audio output through D/A converter
21	AVSS2		Analog Ground 2
22	VREFH1	I	Input terminal 1 of reference voltage "H" (VDD connection)
23	VREFH2	I	Input terminal 2 of reference voltage "H" (Floating)

Pin No.	Symbol	I/O	Description
24	EMPH	O	Emphasis/Non-Emphasis Output ("H": Emphasis)
25	LKFS	O	The Lock Status output of frame sync
26	SOS1	O	Output of subcode sync signal (S0 + S1)
27	RESET	I	System reset at "L"
28	SQEN	I	SQCK I/O Control ("L": internal CK, "H": external CK)
29	SQCK	I/O	Clock for output Subcode-Q data
30	SQDT	O	Serial output of Subcode-Q data
31	SQOK	O	The CRC check result signal output of subcode-Q
32	SBCK	I	CLOCK for output subcode-Q data
33	SDAT	O	Subcode serial data output
34	DVDD1		Digital Vcc1
35	MUTE	I	Mute control Input ("H": Mute ON)
36	MLT	I	Latch Signal Input from Micom
37	MDAT	I	Serial data Input from Micom
38	MCK	I	Serial Clock input from Micom
39	DB8	I/O	SRAM data I/O Port 8 (MSB)
40	DB7	I/O	SRAM data I/O Port 7
41	DB6	I/O	SRAM data I/O Port 6
42	DB5	I/O	SRAM data I/O Port 5
43	DB4	I/O	SRAM data I/O Port 4
44	DB3	I/O	SRAM data I/O Port 3
45	DB2	I/O	SRAM data I/O Port 2
46	DB1	I/O	SRAM data I/O Port 1 (LSB)
47	C1F1	I/O	Monitoring output for C1 error correction (RA1)
48	C1F2	I/O	Monitoring output for C1 error correction (RA2)
49	C2F1	I/O	Monitoring output for C2 error correction (RA3)
50	C2F2	I/O	Monitoring output ofr C2 error correction (RA4)
51	C2FL	I/O	C2 decoder flag (High: When the processing C2 code is impossible correction state) (RA5)
52	/PBCK	I/O	Output of VCO/2 (Normal speed = 4.3218MHz, Double speed = 8.6436MHz) (RA6)
53	DVSS2		Digital Ground 2
54	FSDW	I/O	Unprotected frame sync (RA7)
55	ULKFS	I/O	Frame sync protection state (RA8)
56	/JIT	I/O	Display of either RAM overflow or underflow for ±4 frame Jitter margin(RA9)
57	C4M	I/O	Only monitoring signal (Normal playback: 4.2336MHz) (RA10)
58	C16M	I/O	16.9344MHz signal output (RA11)
59	/WE	I/O	Terminal for test
60	/CS	I/O	Terminal for test
61	SEL1	I	Mode Selection Terminal 1 (H: 33.8688MHz, L: 16.9344MHz)
62	SEL2	I	Mode Selection Terminal 2 (H: APLL L: DPLL)
63	SEL3	I	Mode Selection Terminal 3 (H: CDROM L: CDP)
64	SEL4	I	Mode Selection Terminal 4 (L: Internal SRAM)
65	TEST	I	Test Terminal (L = Normal operating state)
66	EFMI	I	EFM Signal Input
67	APDO	O	Charge Pump output for analog PLL
68	/ISTAT	O	The internal status output
69	TRCNT	I	Tracking counter input signal

Pin No.	Symbol	I/O	Description
70	LOCK	O	Output signal of LKFS Condition sampled PBFR/16 (If LKFS is "H", Lock is "H". If the LKFS is sampled "L" at least 8 times by PBFR/16, Lock is "L")
71	PBFR	O	Write frame clock (Lock: 7.35KHz)
72	SMEF	O	LPF time constant control of the spindle servo error signal
73	SMON	O	ON/OFF control signal for spindle servo
74	DV_{DD2}		Digital V_{CC} 2
75	SMPD	O	Spindle Motor drive (Rough control in the CLV-S mode Phase control in the CLV-P mode)
76	SMSD	O	Spindle Motor drive (Velocity control in the CLV-P mode)
77	VCO_{O1}	O	Vco output signal (When the state is lock by means of PBFR,it is 8.643MHz)
78	VCO_{I1}	I	VCO input signal
79	DSPEED	I	Double speed mode control (H: Normal Speed, L: Double Speed)
80	APD02	O	Analog PLL Charge Pump output for Double Speed mode

MAJOR WAVEFORM

TRACKING ERROR (REW)

1

2

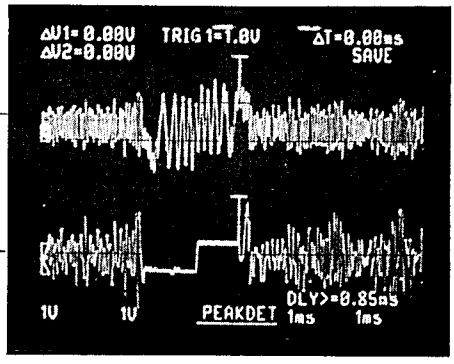

● **Connection** : 1. IC501 pin 53 . (TEO)
2. IC505 pin 25 .

● **Inspection** : Check tracking servo circuit. (RWD)

TRACKING ERROR (FWD)

1

2

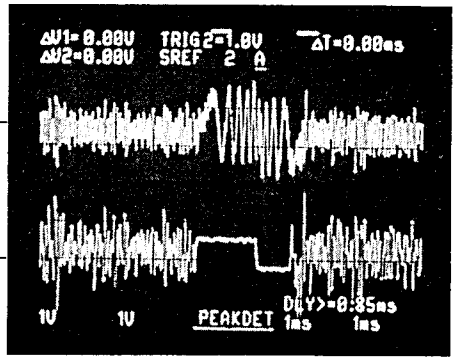

● **Connection** : 1. IC501 pin 53 . (TEO)
2. IC505 pin 25 .

● **Inspection** : Check tracking servo circuit. (FWD)

FOCUS GAIN

3

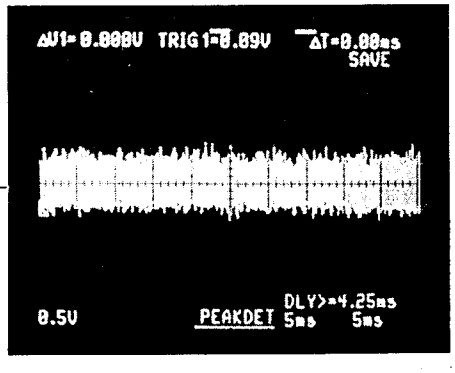

● **Connection** : 3. IC505 pins ① and ②.
※ Test disc: YEDS-43
※ Adjustment : VR503

● **Inspection** : Check focus servo circuit.

TRACKING GAIN

4

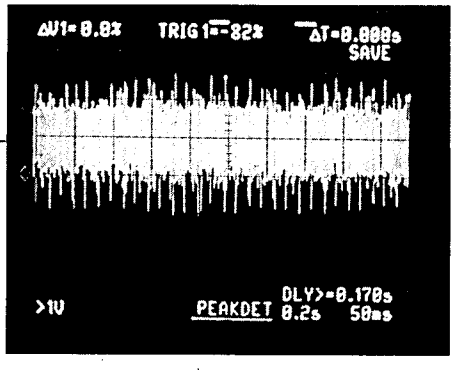

● **Connection** : 4. IC505 pins 26 and 27
※ Test disc: YEDS-43
※ Adjustment : VR504

● **Inspection** : Check tracking servo circuit.

TRACKING COIL DRIVE

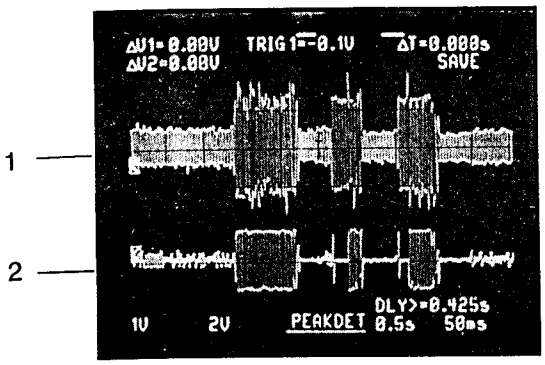

- **Connection** : 1. IC501 pin 53 . (TEO)
  2. IC505 pin 25 .
- **Inspection** : - Check tracking servo circuit.
  - Check IC501. (Cold solder joint or short circuit)

E.F. BALANCE

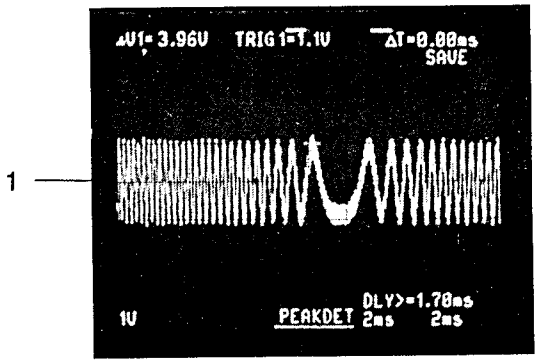

- **Connection** : 1. IC501 pin 53 .
- **Inspection** : - Check tracking balance adjustment
  - Check CN501 and CN502.

LASER ON

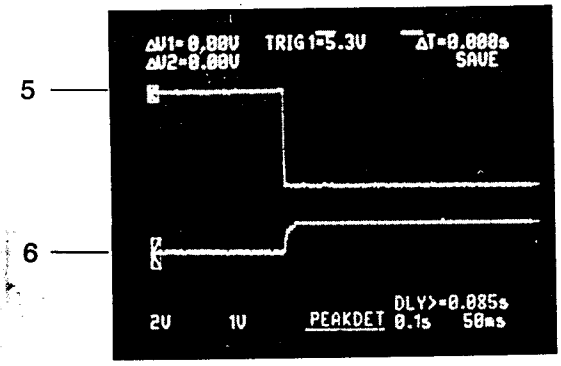

- **Connection** : 5. IC501 pin 60 .
  6. Q501 Collector
- **Inspection** : - Check IC501 pin 60 to Q502 collector. (Pattern defective)
  - Check Q502.

READING

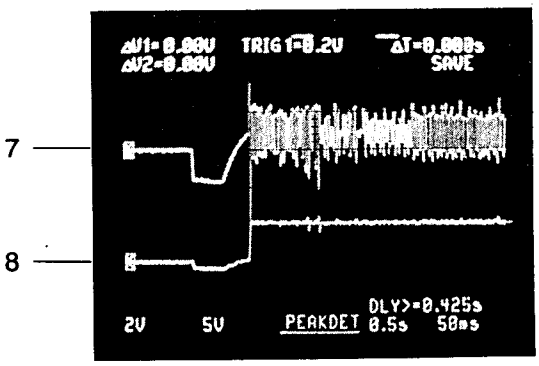

- **Connection** : 7. IC505 pin 4.
  8. IC501 pin 59 . (FOK)
- **Inspection** : Check IC505 pin 4 to IC501 pin 46 . (Pattern defective)

9

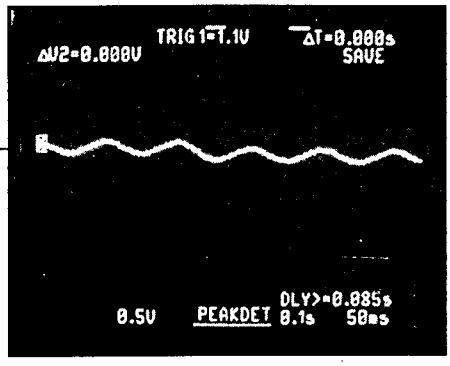

● **Connection :** 9. IC505 pins ⑰ and ⑱.

● **Inspection :** - Check IC501 pin ㊵ to IC505 pin ⑳ . (Pattern defective)
- Check voltage. (IC505 pin ⑳)

10

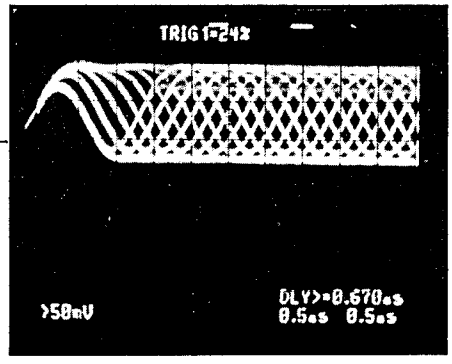

● **Connection :** 10. IC501 pin ㊻

● **Inspection : :** - Check focus offset adjustment. (VR501)

3

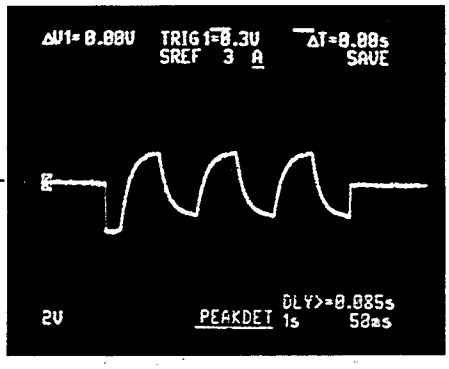

● **Connection :** 3. IC505 pins ① and ②.

● **Inspection :** - Is focus search signal output to IC501 pin ㊻ ?

11

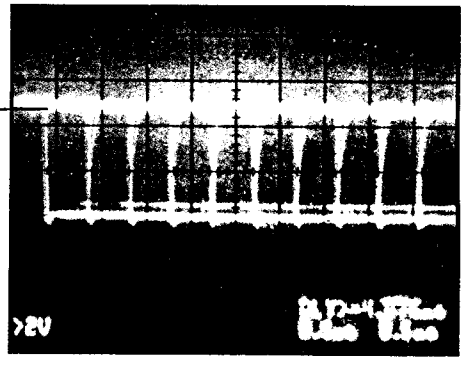

● **Connection :** 11. IC501 pin ㊳ .

● **Inspection :** - Check IC502 and surrounding circuit (Cold solder joint or short circuit)

TROUBLESHOOTING GUIDE

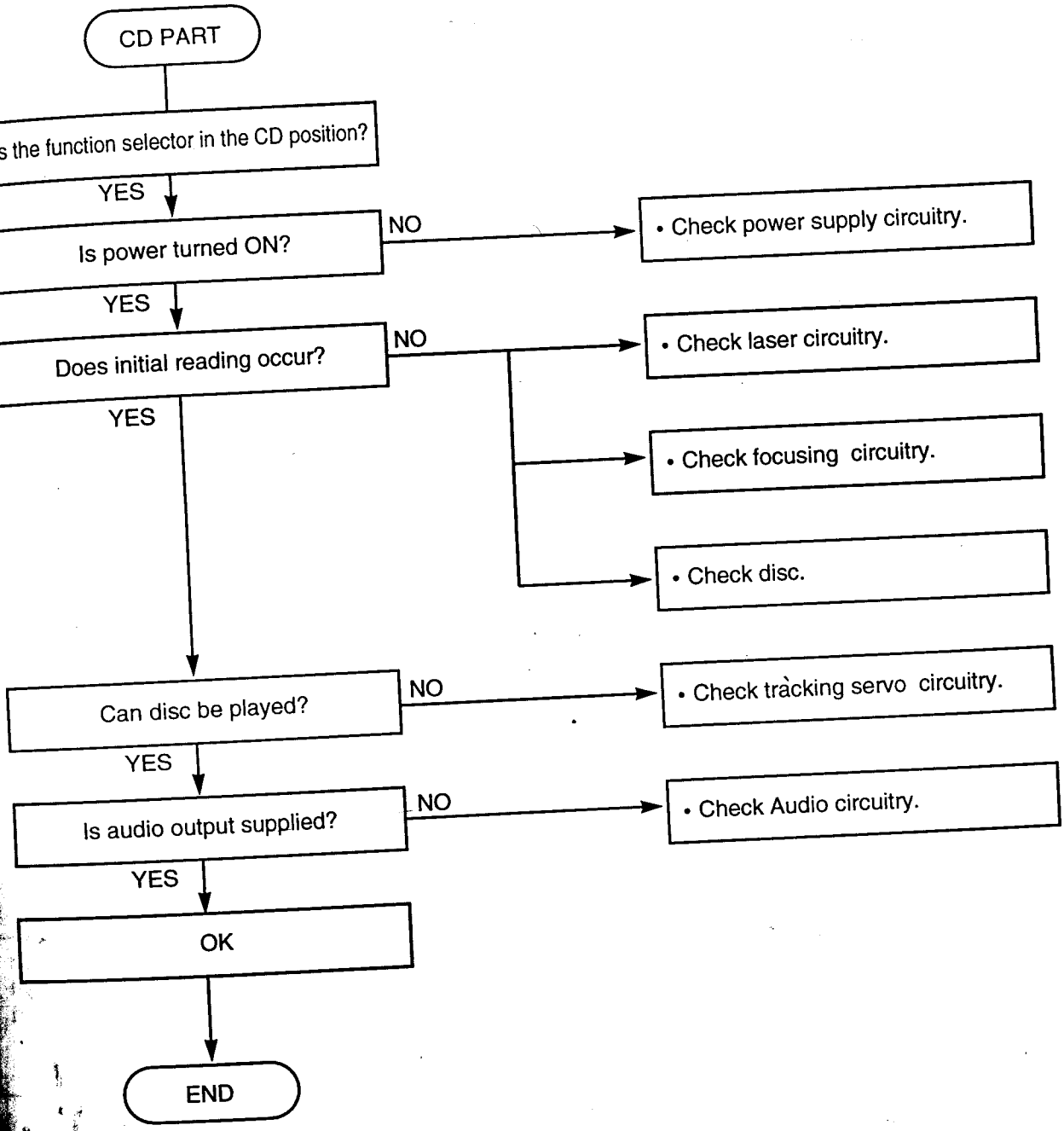

(1) If display LED lighting is abnormal

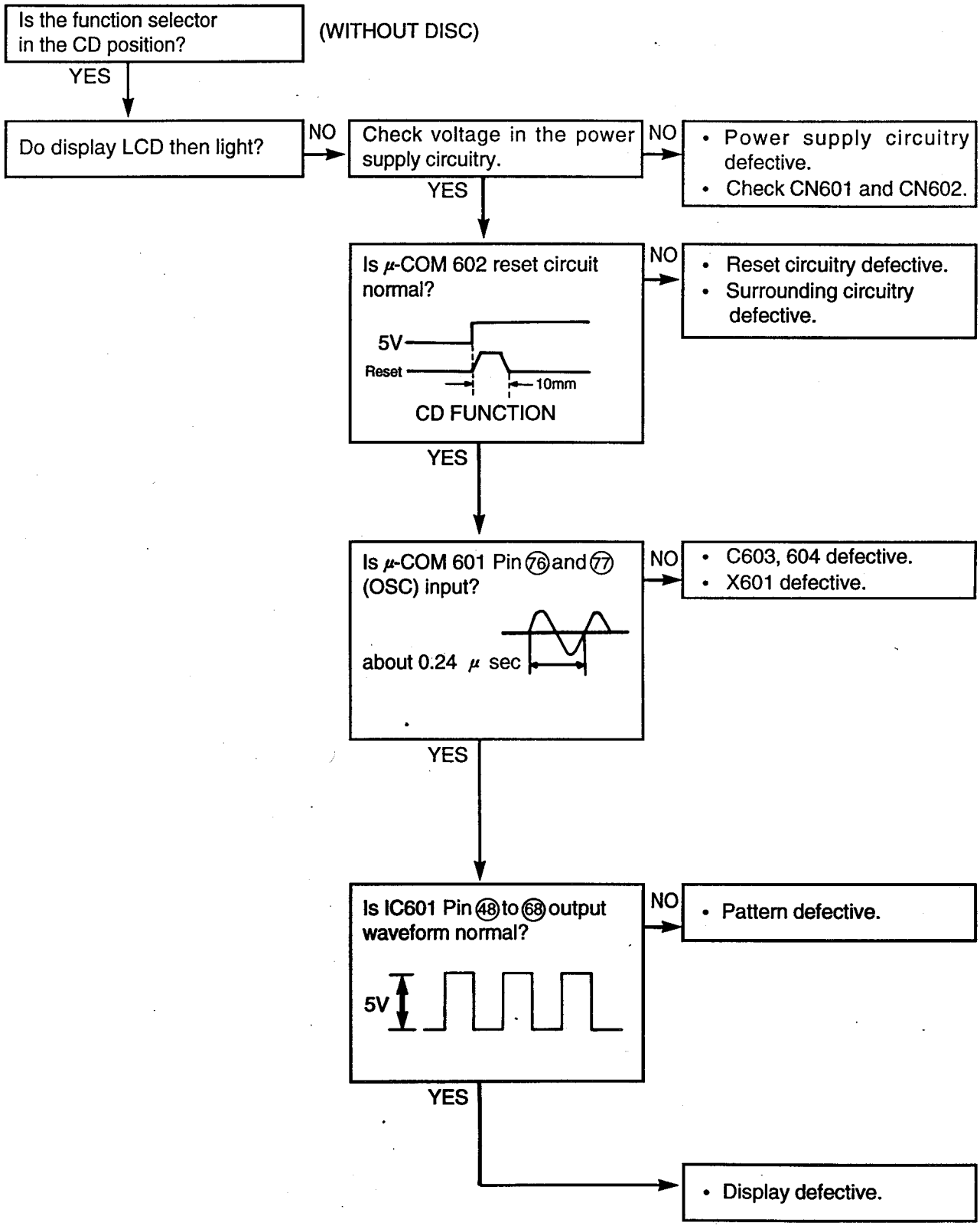

2) If initial reading is not carried out (with disc)

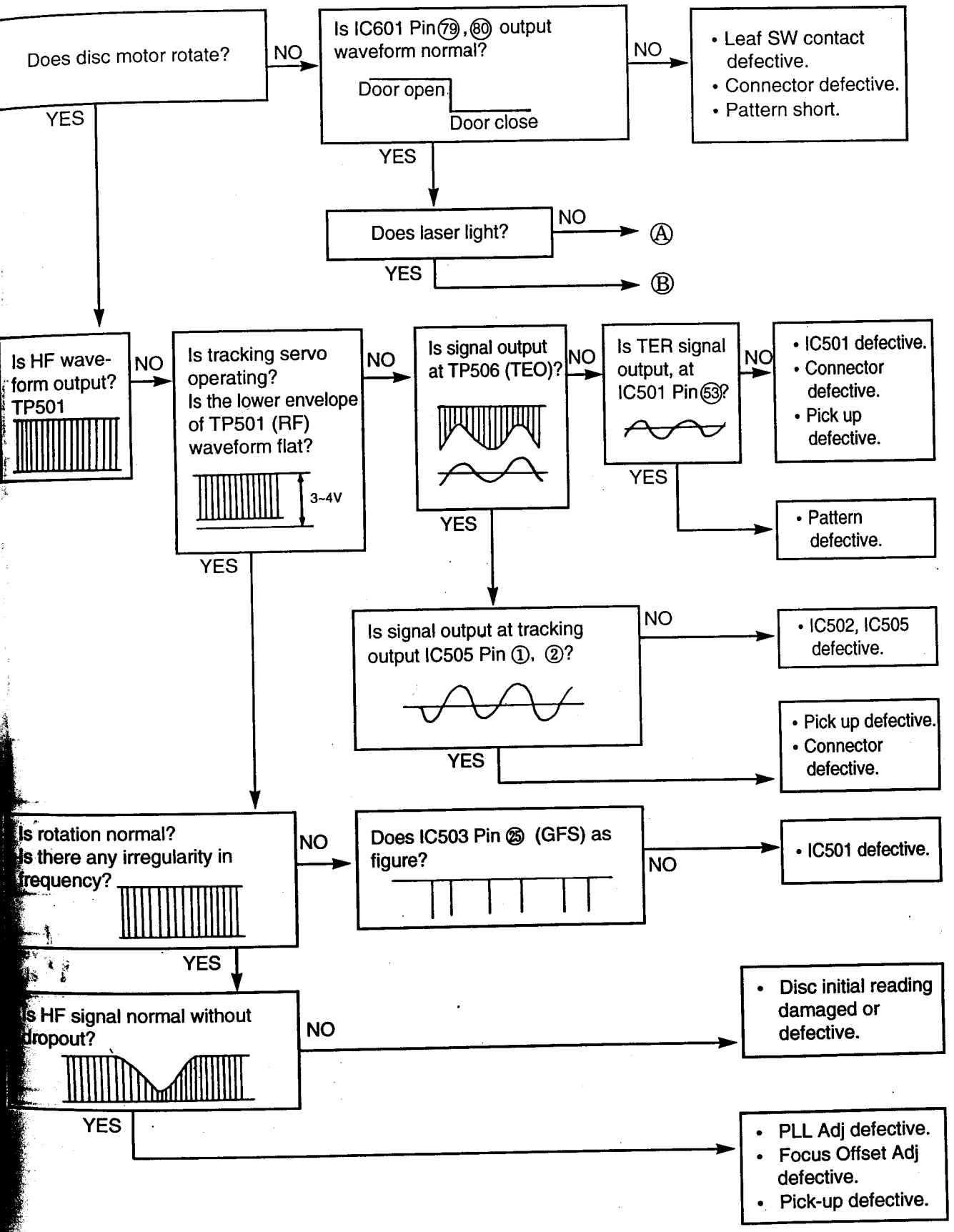

Ⓐ When laser does not light

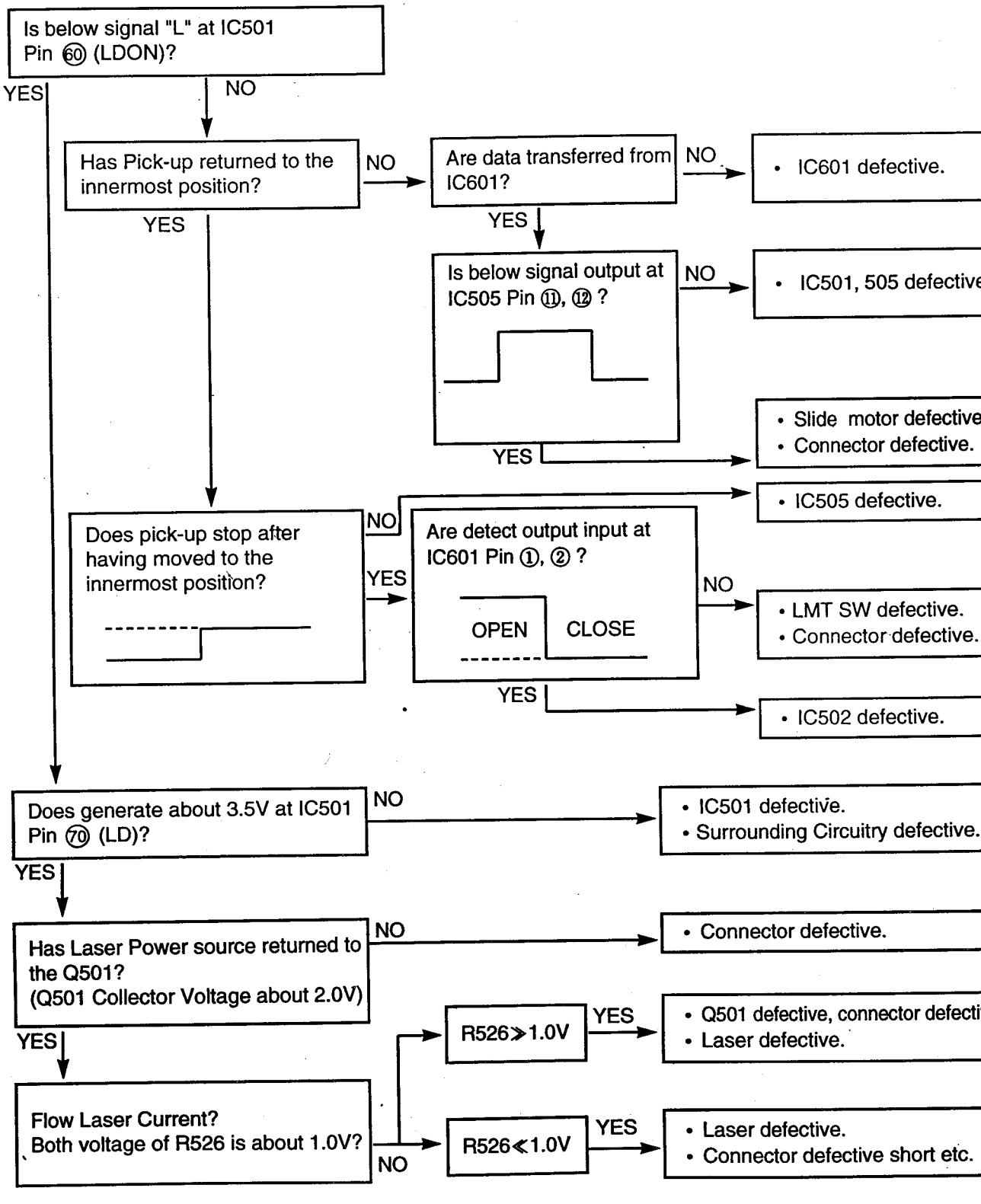

③ When laser light

Do lenses move up and down?

NO → Is signal output at focus search terminal?

IC505 Pin ④ (FEO)

NO → • IC501 defective.
• C522 defective.

YES → Is signal output at IC505 Pin ①, ②?

NO → • IC505 defective.

YES → • Actuator short.
• Connector short.

YES → Is TP501 (HF) signal waveform output?

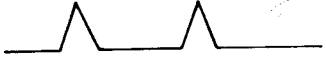

NO → • Connector short.
• IC501 defective.
• Pick-up defective.

YES → The waveform of TP501 (HF) is below figure?

Amplitude 0.5~1.5V

NO → • Turntable height error.
• Laser diode degraded.

YES → Is Fok signal output?
TP501 (HF and REF) 0.4V over OK.

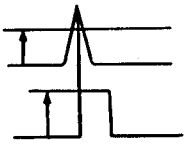

NO → • IC501 defective.

YES → Is Fok signal input to IC601 Pin ⑨?

NO → • Pattern defective.

YES → Ⓒ

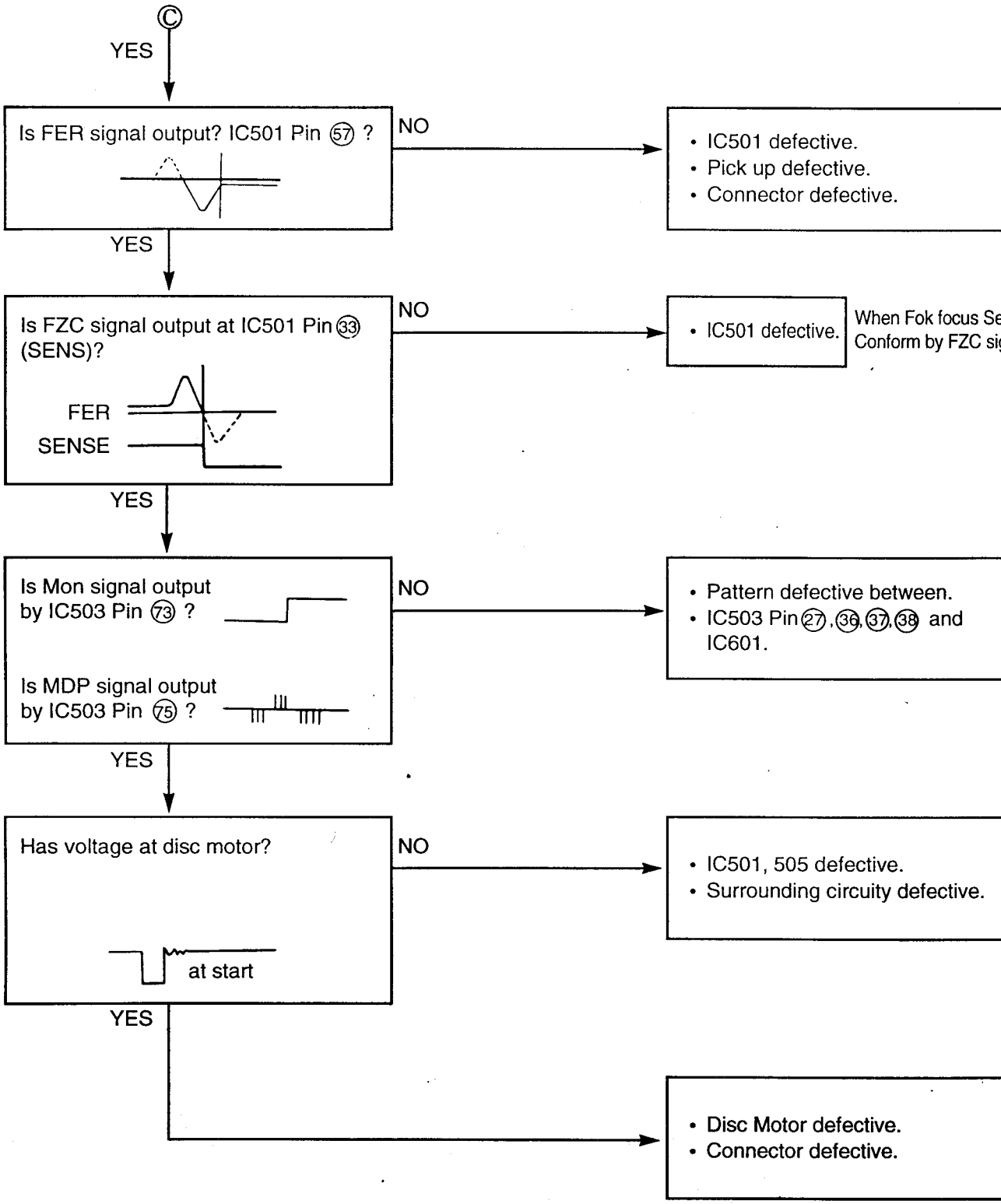
Ⓒ
YES
Is FER signal output? IC501 Pin 57 ?
NO
• IC501 defective.
• Pick up defective.
• Connector defective.
YES
Is FZC signal output at IC501 Pin 33 (SENS)?
FER
SENSE
NO
• IC501 defective.
When Fok focus Se
Conform by FZC si
YES
Is Mon signal output by IC503 Pin 73 ?
Is MDP signal output by IC503 Pin 75 ?
NO
• Pattern defective between.
• IC503 Pin 27, 36, 37, 38 and IC601.
YES
Has voltage at disc motor?
at start
NO
• IC501, 505 defective.
• Surrounding circuity defective.
YES
• Disc Motor defective.
• Connector defective.

■ AUDIO SECTION

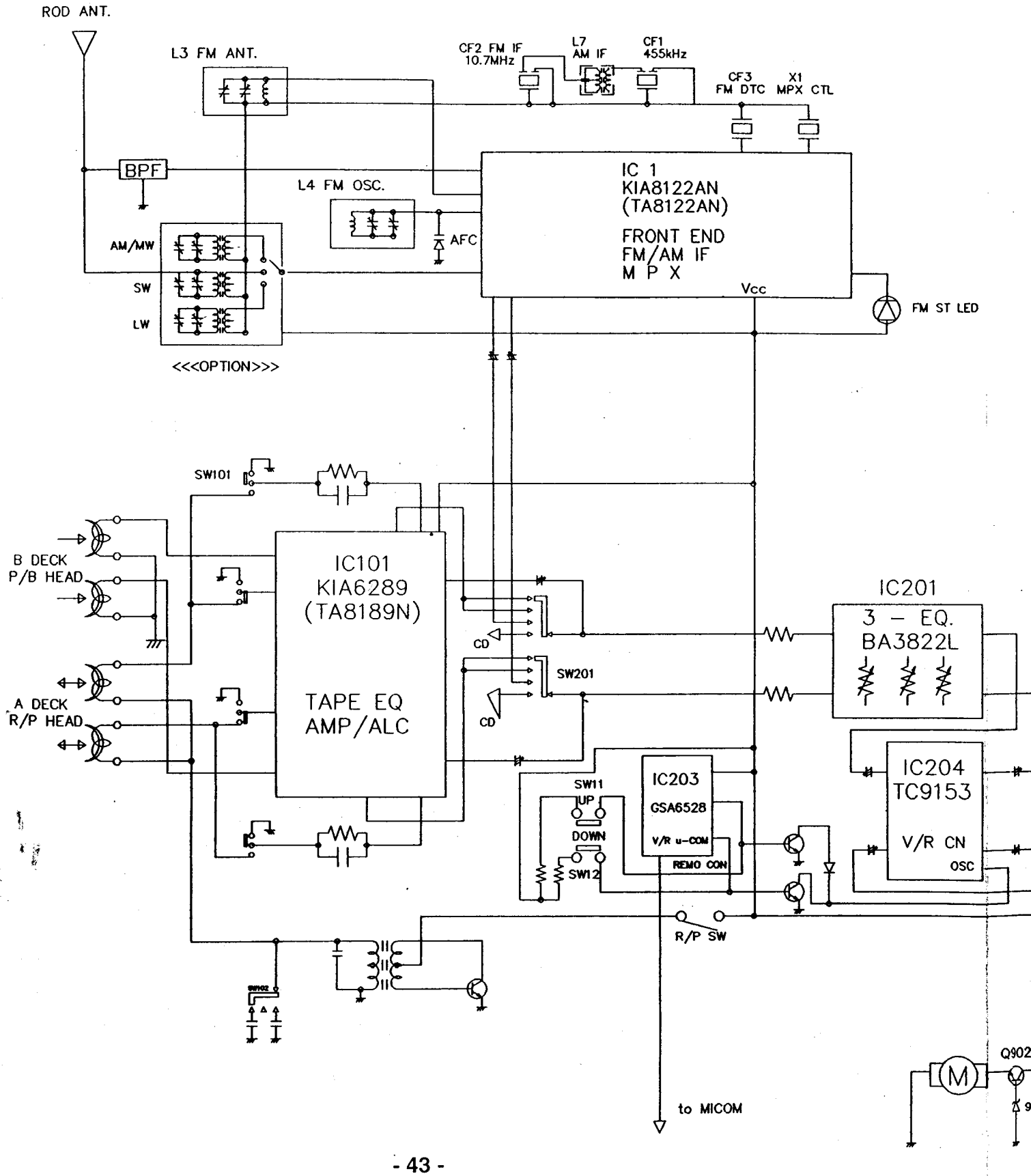

BLOCK DIAGRAM

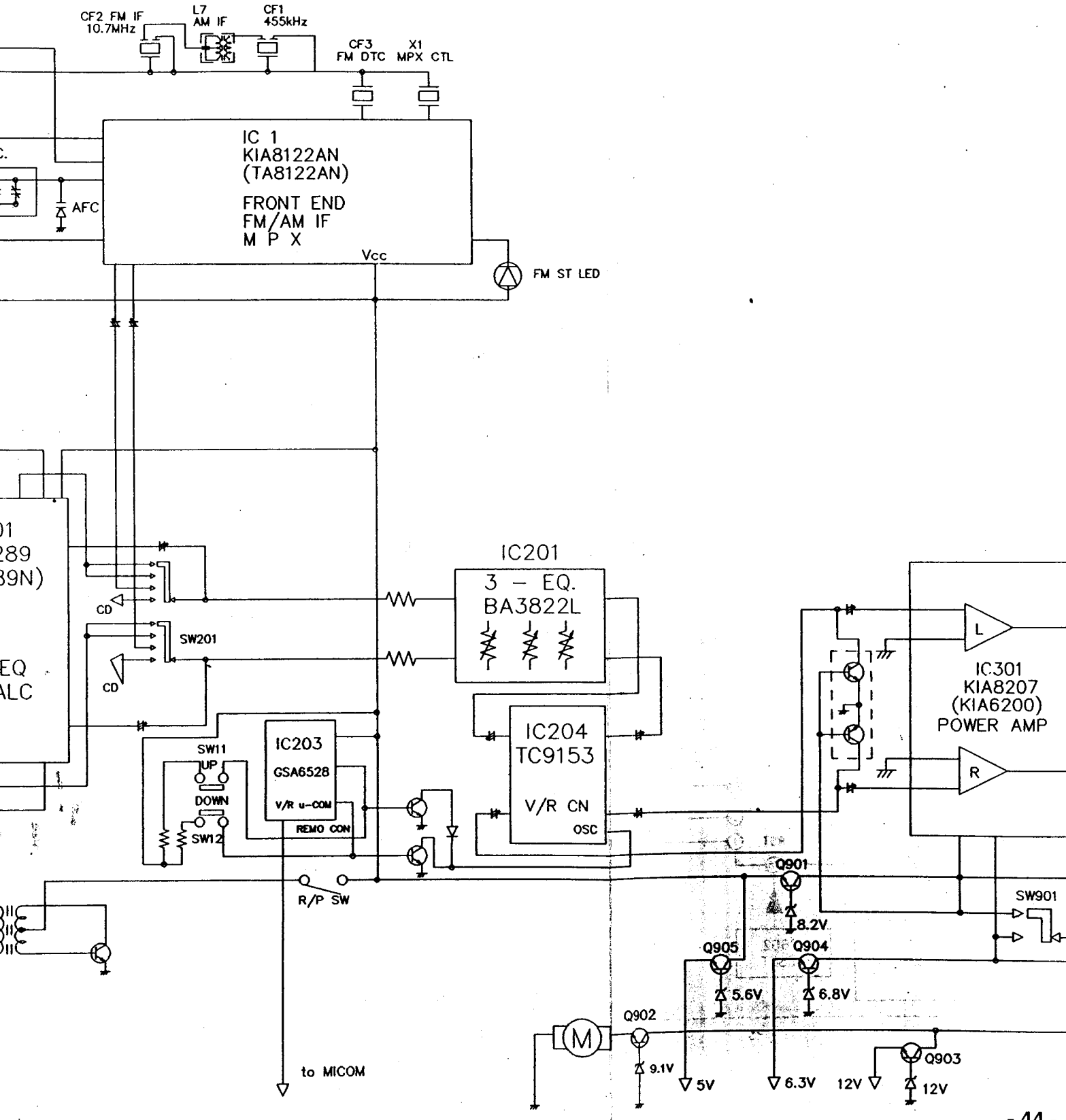

GRAM

T LED

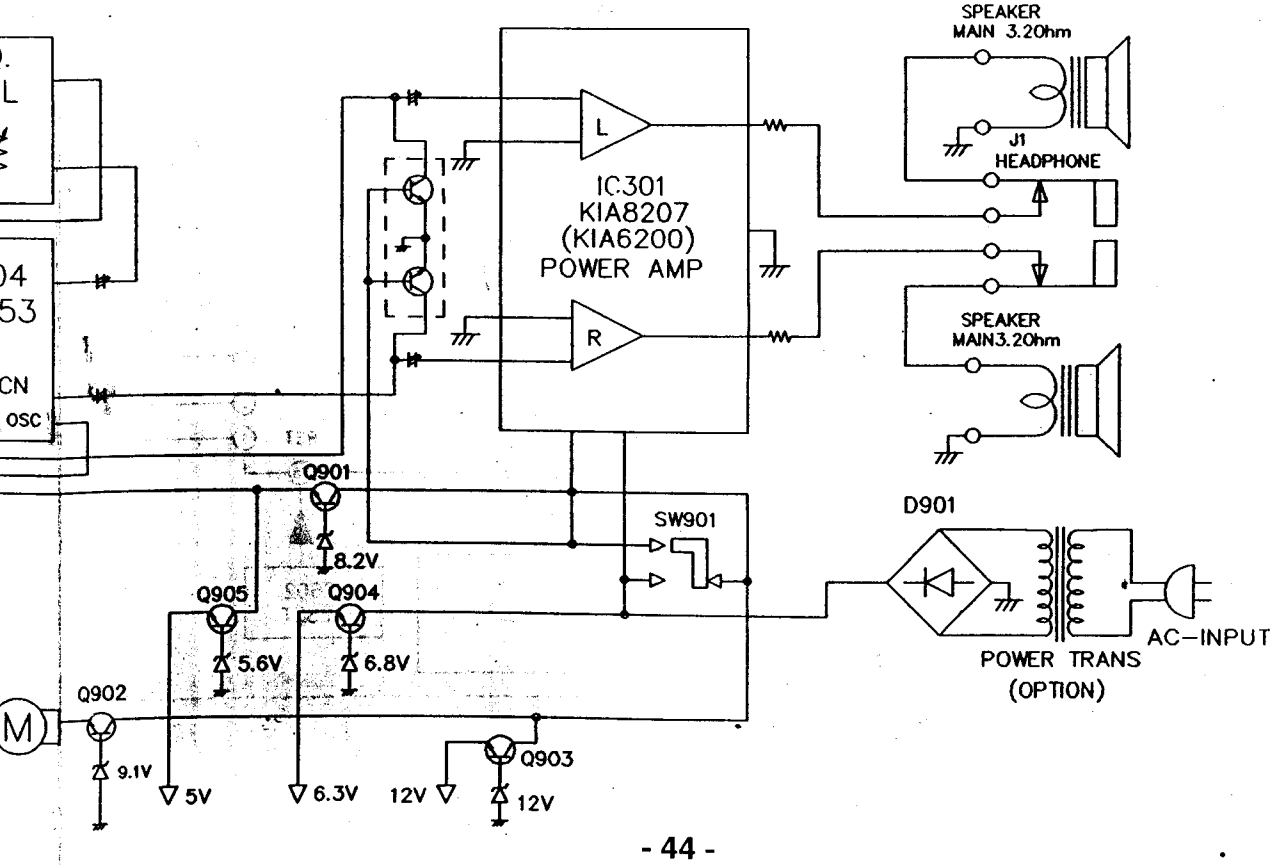
SPEAKER
MAIN 3.2Ohm
J1
HEADPHONE
IC301
KIA8207
(KIA6200)
POWER AMP
L
R
SPEAKER
MAIN3.2Ohm
Q901
8.2V
SW901
D901
Q905
Q904
5.6V
6.8V
AC-INPUT
POWER TRANS
(OPTION)
Q902
9.1V
5V
6.3V
12V
Q903
12V
04
53
CN
OSC
M

■ CDP SECTION

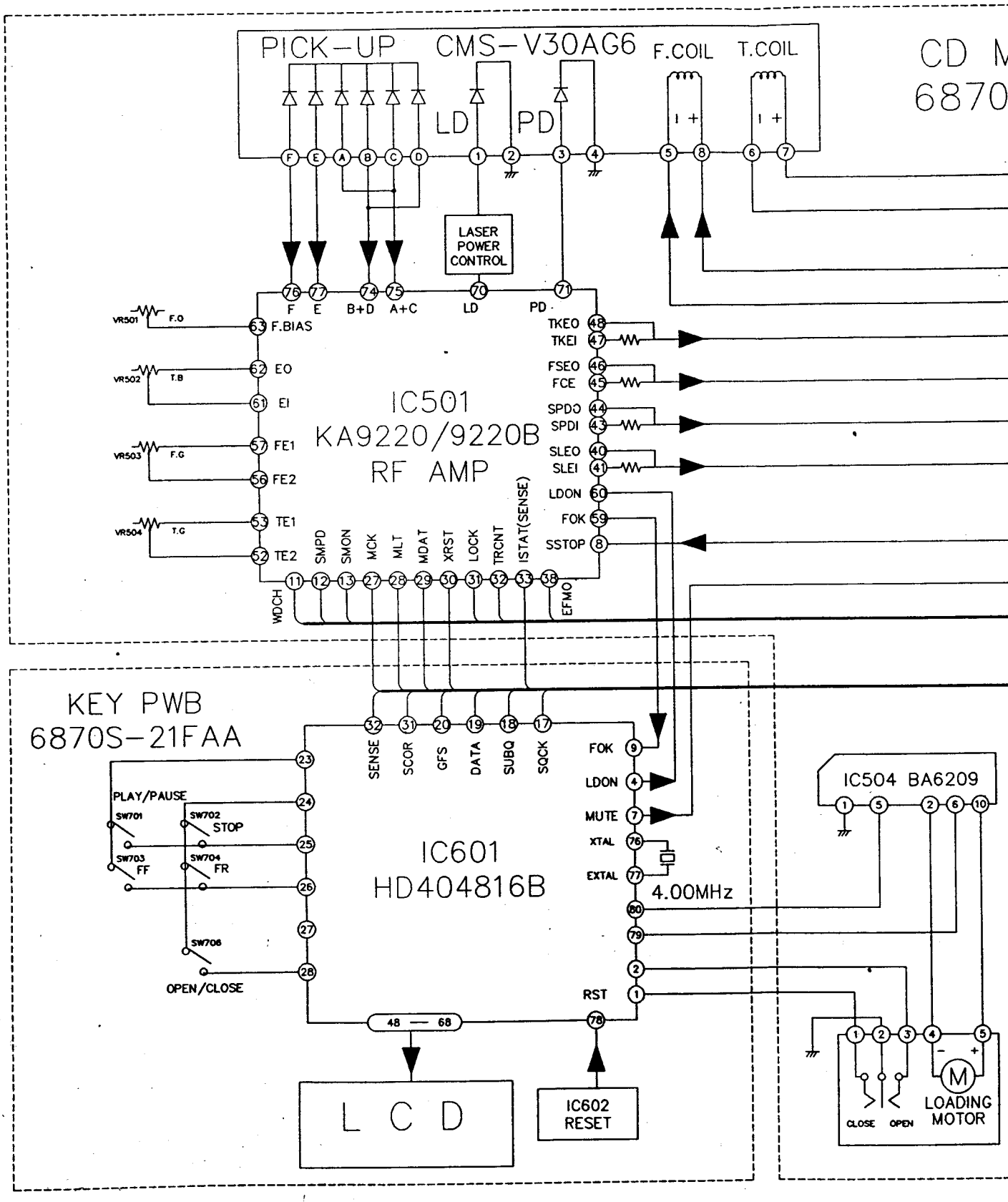
PICK-UP CMS-V30AG6
F.COIL
T.COIL
LD
PD
LASER POWER CONTROL
F E B+D A+C LD PD
VR501 F.O
VR502 T.B
VR503 F.G
VR504 T.G
F.BIAS
EO
EI
FE1
FE2
TE1
TE2
IC501
KA9220/9220B
RF AMP
TKEO
TKEI
FSEO
FCE
SPDO
SPDI
SLEO
SLEI
LDON
FOK
SSTOP
SMPD SMON MCK MLT MDAT XRST LOCK TRCNT ISTAT(SENSE)
WDCH
EFMO
KEY PWB
6870S-21FAA
SENSE SCOR GFS DATA SUBQ SQCK
FOK
LDON
MUTE
XTAL
EXTAL
4.00MHz
IC601
HD404816B
PLAY/PAUSE
SW701
SW702 STOP
SW703 FF
SW704 FR
SW706
OPEN/CLOSE
RST
48 — 68
L C D
IC602 RESET
IC504 BA6209
CLOSE
OPEN
LOADING MOTOR

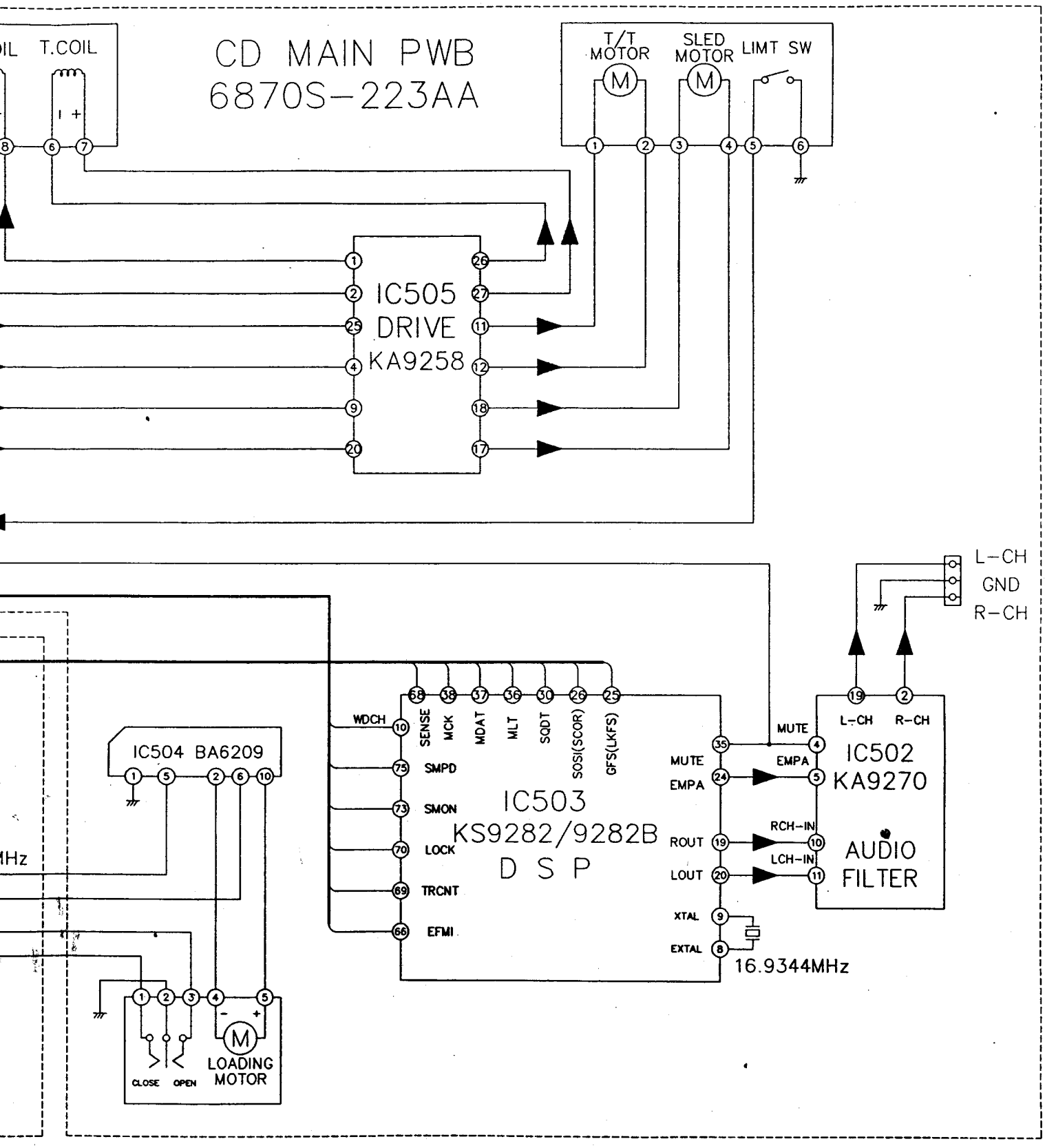
CD MAIN PWB
6870S-223AA
T.COIL
T/T MOTOR
SLED MOTOR
LIMT SW
IC505
DRIVE
KA9258
L-CH
GND
R-CH
IC504 BA6209
WDCH
SENSE
MCK
MDAT
MLT
SQDT
SOSI(SCOR)
GFS(LKFS)
SMPD
SMON
LOCK
TRCNT
EFMI
IC503
KS9282/9282B
D S P
MUTE
EMPA
ROUT
LOUT
XTAL
EXTAL
16.9344MHz
L-CH
R-CH
IC502
KA9270
AUDIO
FILTER
RCH-IN
LCH-IN
CLOSE
OPEN
LOADING
MOTOR

KEY SECTION

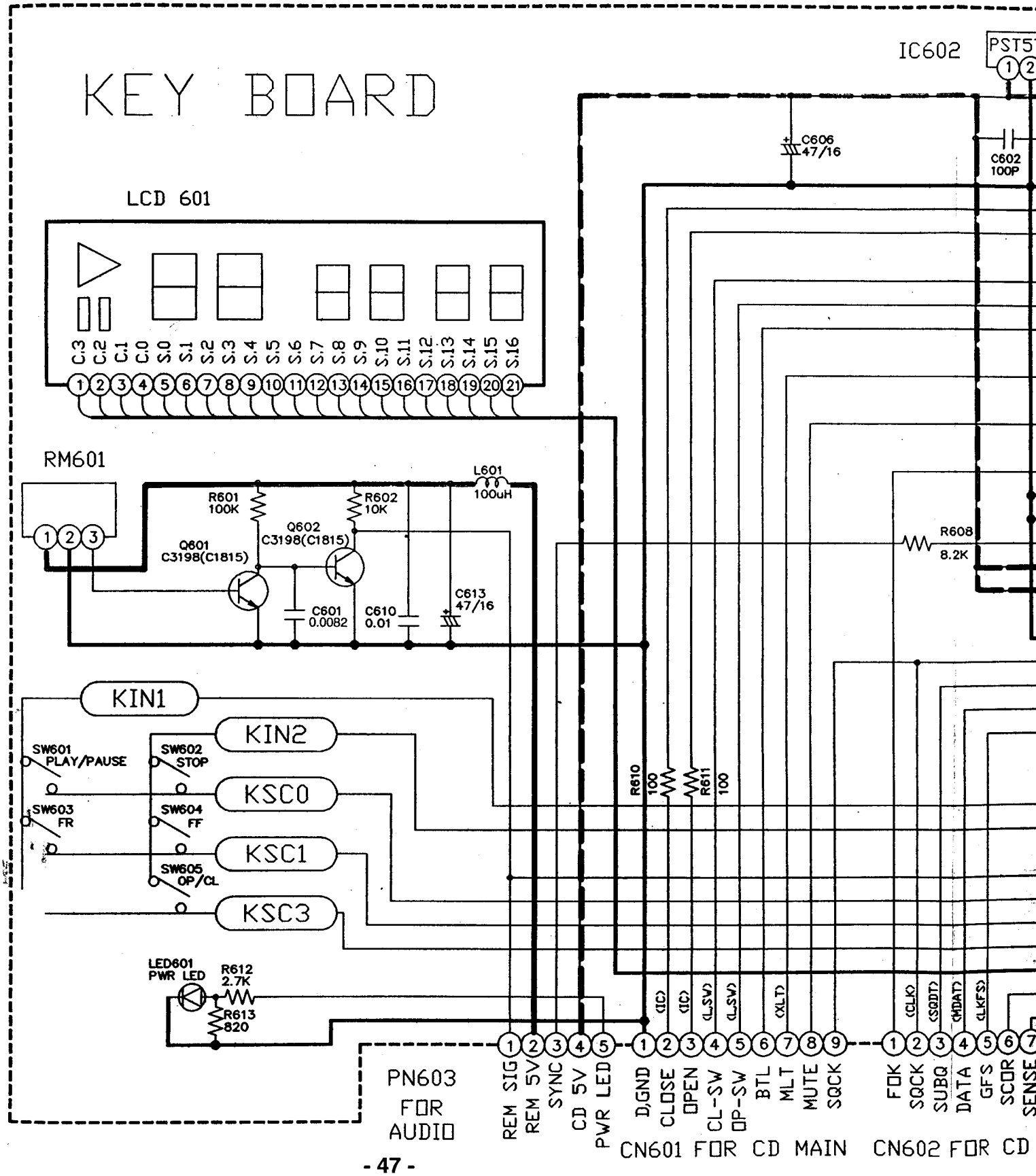
KEY BOARD
LCD 601
C.3 C.2 C.1 C.0 S.0 S.1 S.2 S.3 S.4 S.5 S.6 S.7 S.8 S.9 S.10 S.11 S.12 S.13 S.14 S.15 S.16
RM601
R601 100K
R602 10K
L601 100uH
Q601 C3198(C1815)
Q602 C3198(C1815)
C601 0.0082
C610 0.01
C613 47/16
C606 47/16
C602 100P
IC602
R608 8.2K
KIN1
KIN2
KSC0
KSC1
KSC3
SW601 PLAY/PAUSE
SW602 STOP
SW603 FR
SW604 FF
SW605 OP/CL
R610 100
R611 100
LED601 PWR LED
R612 2.7K
R613 820
PN603 FOR AUDIO
REM SIG
REM 5V
SYNC
CD 5V
PWR LED
D,GND
CLOSE
OPEN
CL-SW
OP-SW
BTL
MLT
MUTE
SQCK
CN601 FOR CD MAIN
FOK
SQCK
SUBQ
DATA
GFS
SCOR
SENSE
CN602 FOR CD

SCHEMATIC DIAGRAM

NOTES:
1. Resistance values are indicated in ohms unless otherwise specified (K=1,00
2. Capacitance values are shown in microfarads unless otherwise (P=MICRO-
3. Schematic diagram for this model are subject to change for improvement wi
4. Drawing No.: AS-0129C ('95. 1. 25)

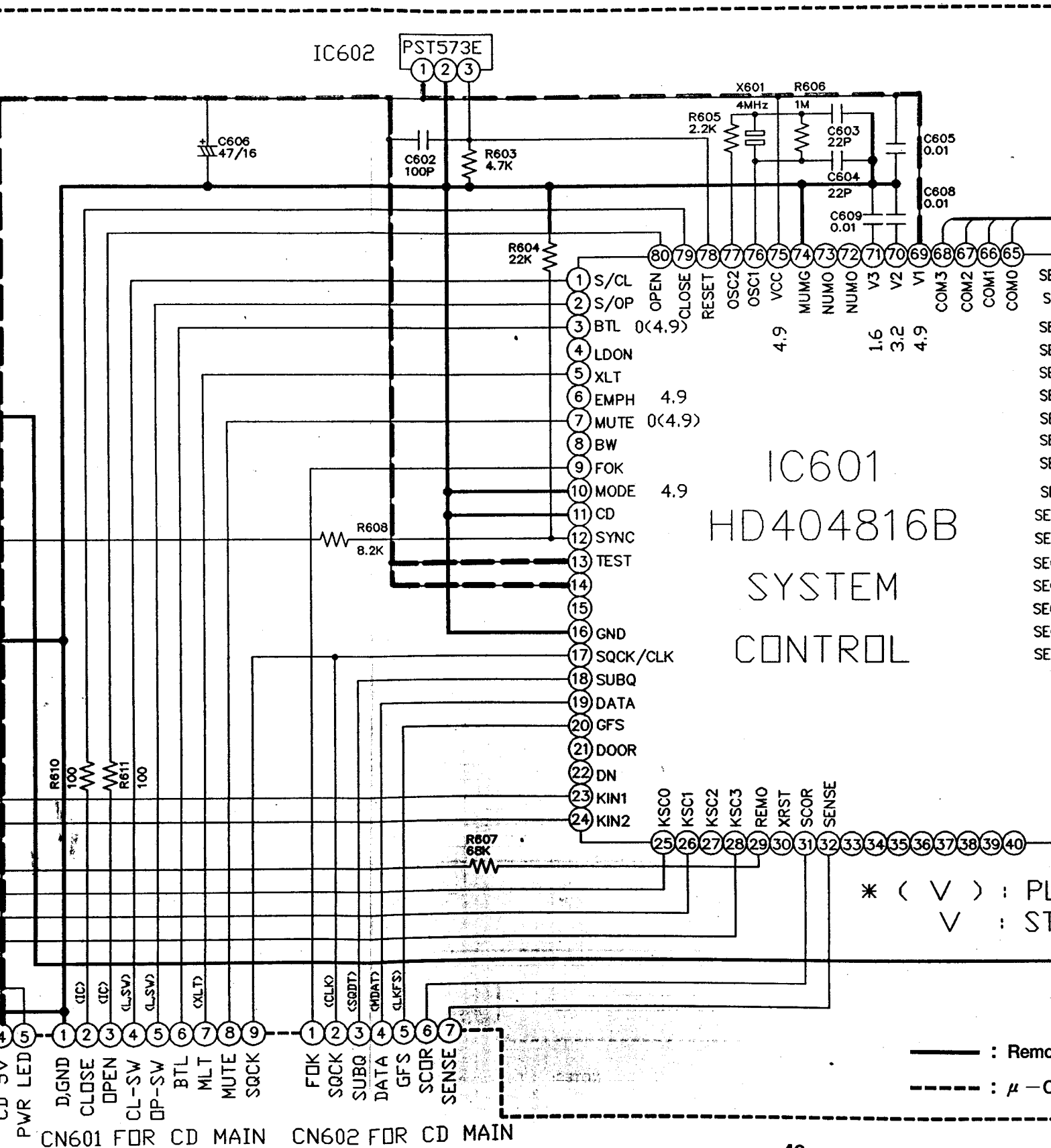

EMATIC DIAGRAM

NOTES:
1. Resistance values are indicated in ohms unless otherwise specified (K=1,000, M=1,000,000).
2. Capacitance values are shown in microfarads unless otherwise (P=MICRO-MICRO FARADS).
3. Schematic diagram for this model are subject to change for improvement without prior notice.
4. Drawing No.: AS-0129C ('95. 1. 25)

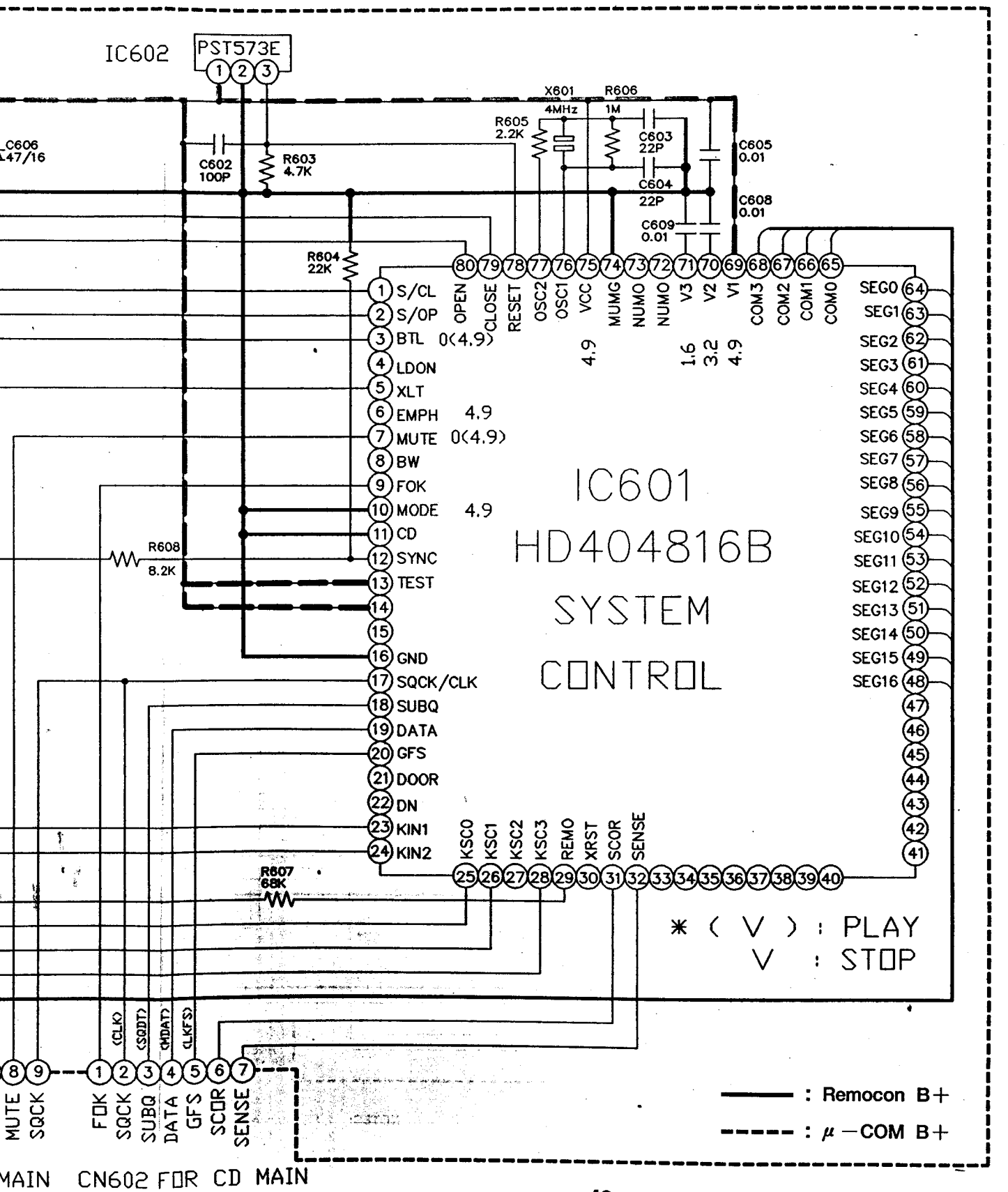

■ CDP SECTION

——— : FOCUS SIGNAL

- - - - - : TRACKING SIGNAL

——— : SLIDI

- - - - - : SPINI

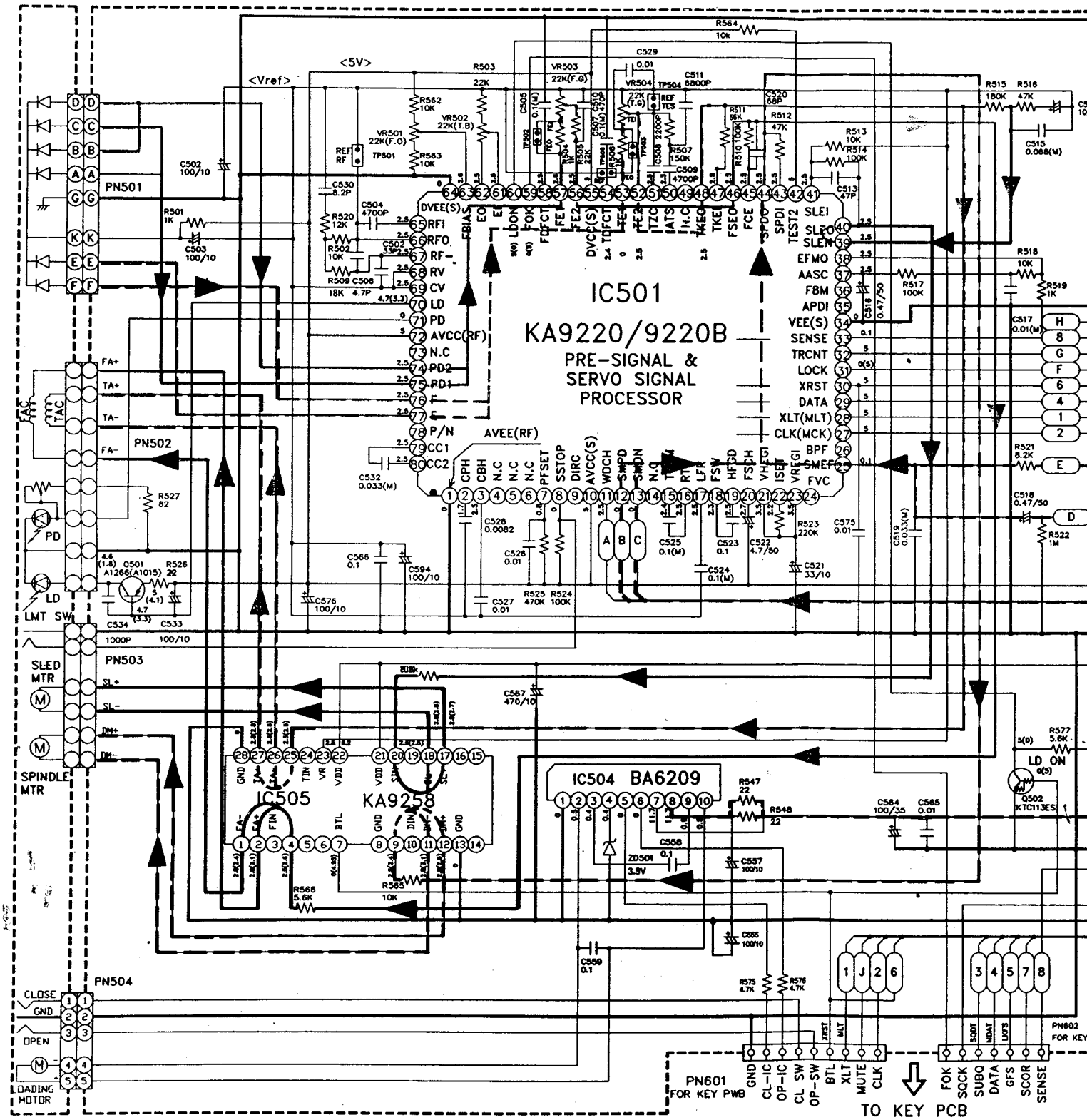

NOTES:
1. Resistance values are indicated in ohms unless otherwise specified (K=
2. Capacitance values are shown in microfarads unless otherwise (P=MIC
3. Schematic diagram for this model are subject to change for improveme
4. Drawing No.: AS-0129G ('95. 1. 25)

: FOCUS SIGNAL : SLIDE SIGNAL : AUDIO SIGNAL : CD B+

: TRACKING SIGNAL : SPINDLE SIGNAL : IC504 B+

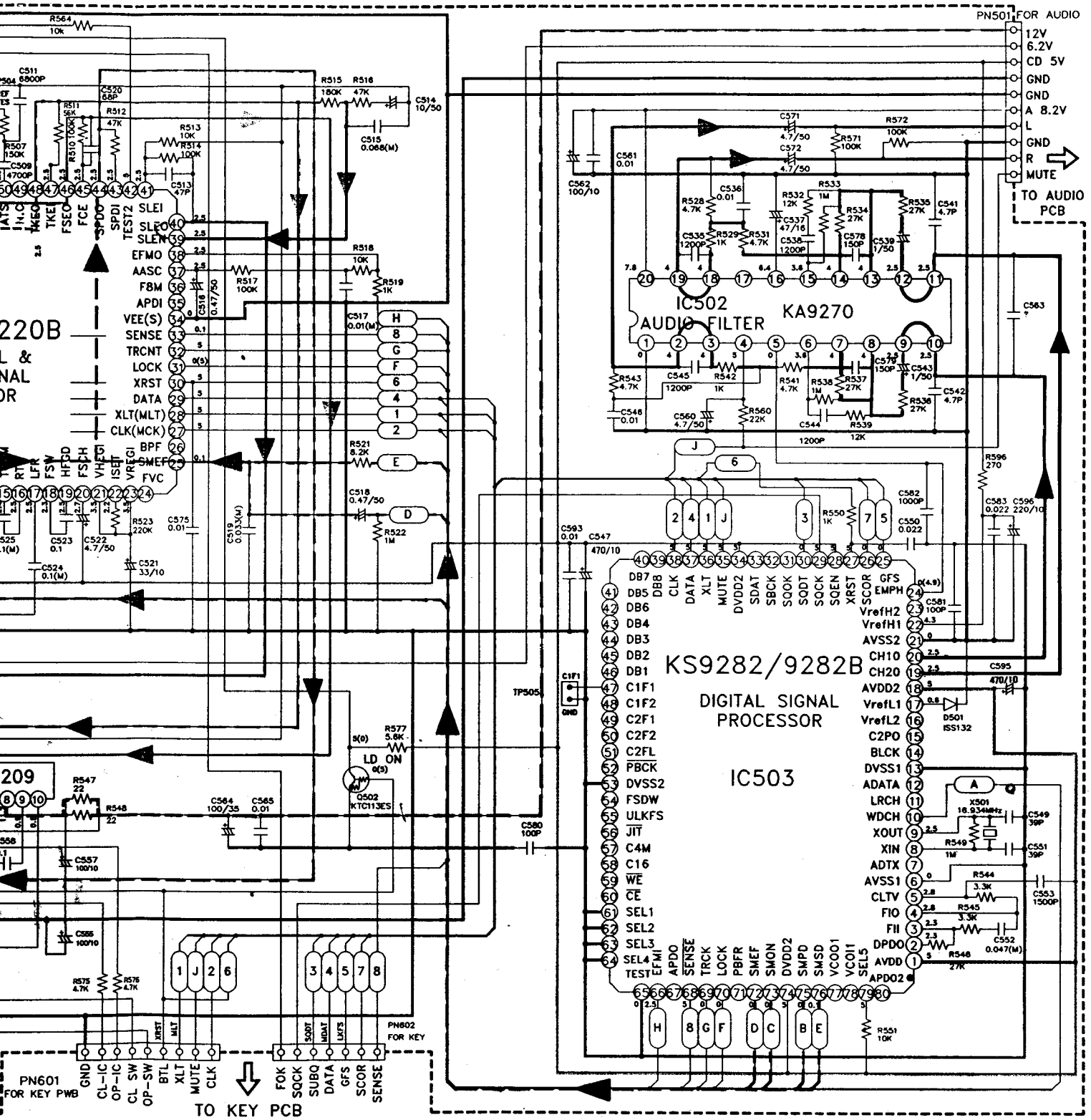

istance values are indicated in ohms unless otherwise specified (K=1,000, M=1,000,000).
pacitance values are shown in microfarads unless otherwise (P=MICRO-MICRO FARADS).
hematic diagram for this model are subject to change for improvement without prior notice.
awing No.: AS-0129G ('95. 1. 25)

■ AUDIO SECTION

——— : AM (MW) SIGNAL - - - - - : FM SIGNAL - - - - - : TAPE SIGNAL : COMMON SIGNAL

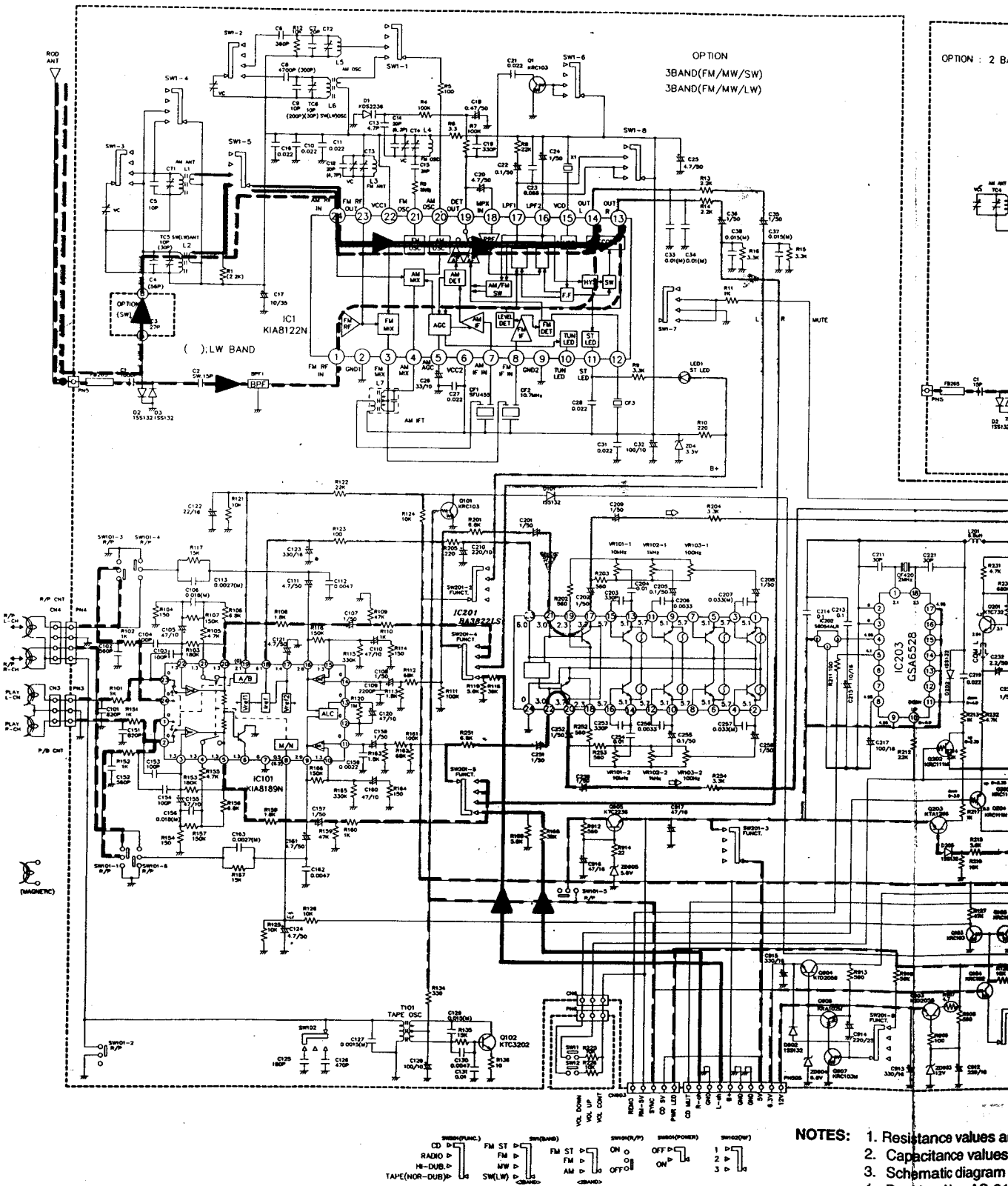

NAL : COMMON SIGNAL : B+ : CD SIGNAL : LW SIGNAL
: SW SIGNAL

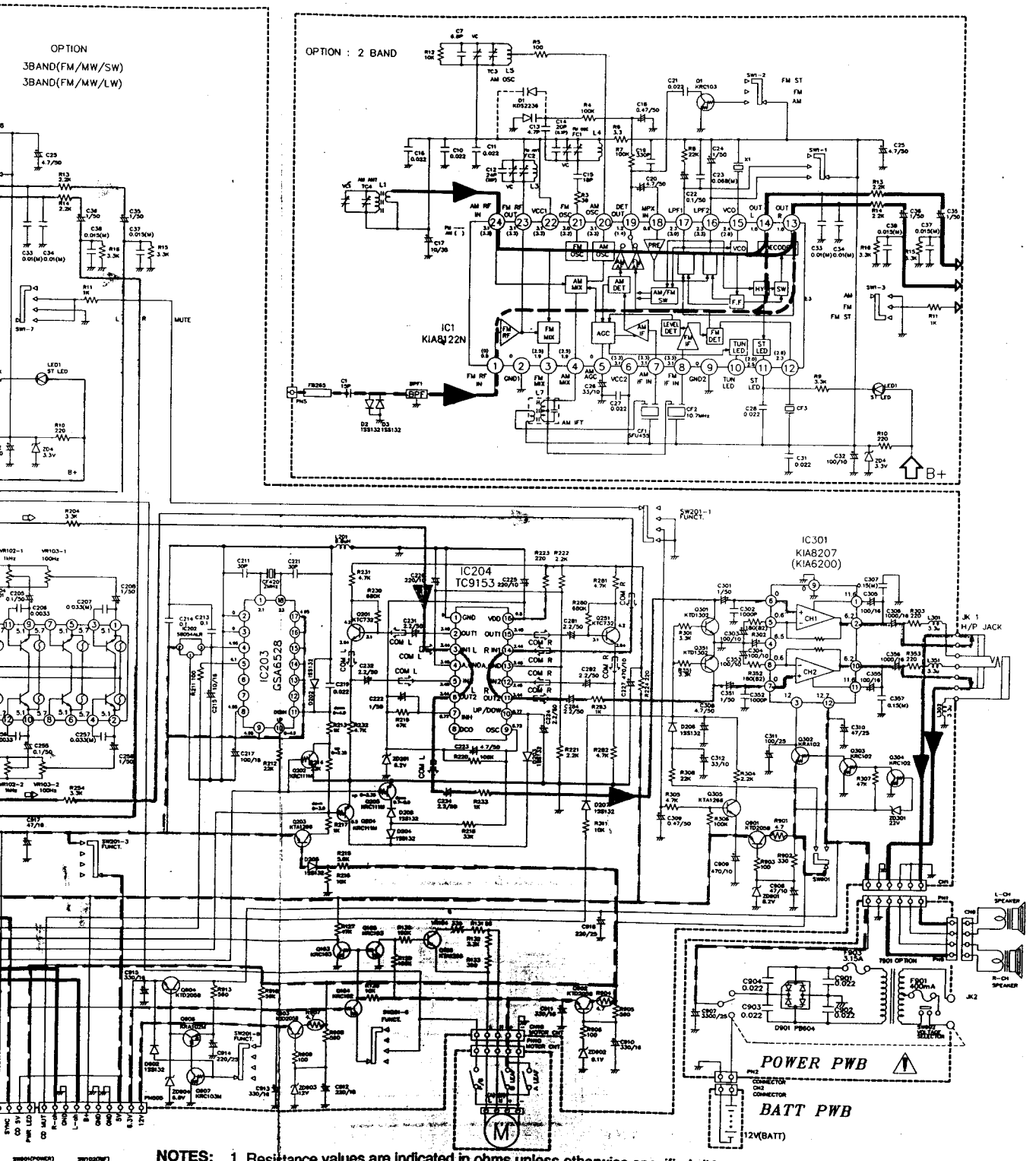

NOTES:
1. Resistance values are indicated in ohms unless otherwise specified (K=1,000, M=1,000,000).
2. Capacitance values are shown in microfarads unless otherwise (P=MICRO-MICRO FARADS).
3. Schematic diagram for this model are subject to change for improvement without prior notice.
4. Drawing No.: AS-0137A ('95. 1. 25)

■ FRONT CASE SECTION

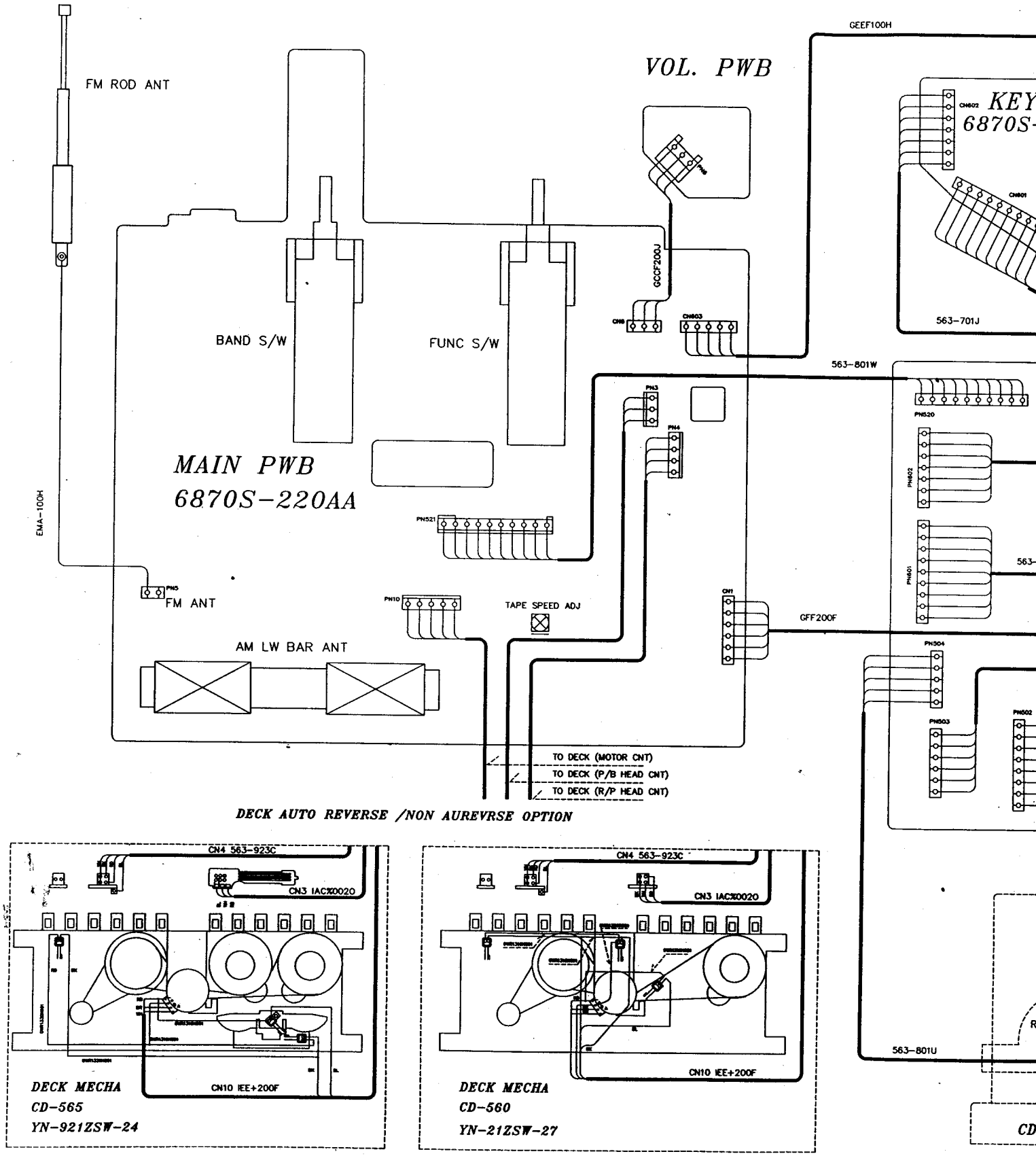

WIRING DIAGRAM

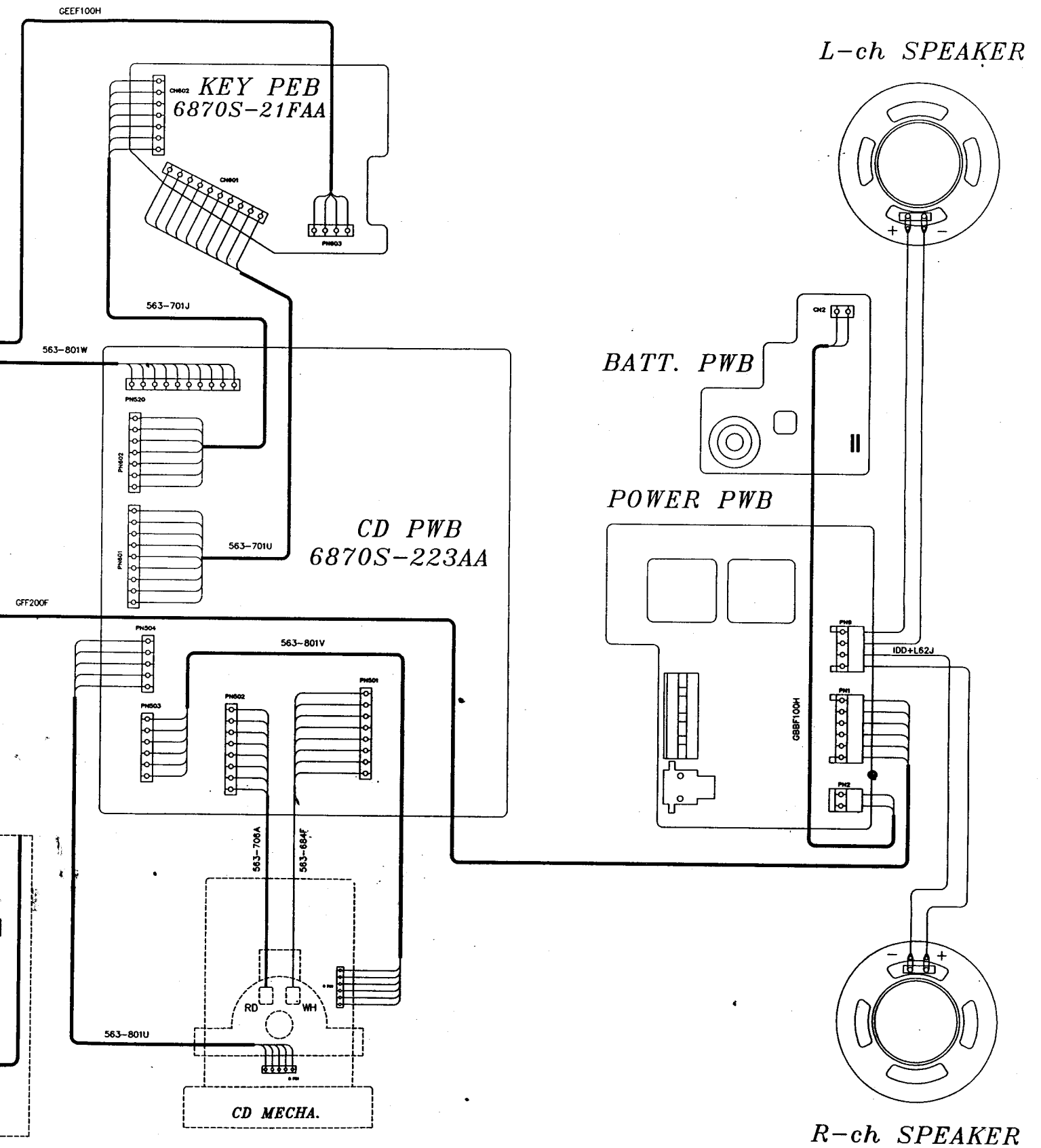

EXPLODED VIEW & PARTS LIST

■ FRONT CASE SECTION

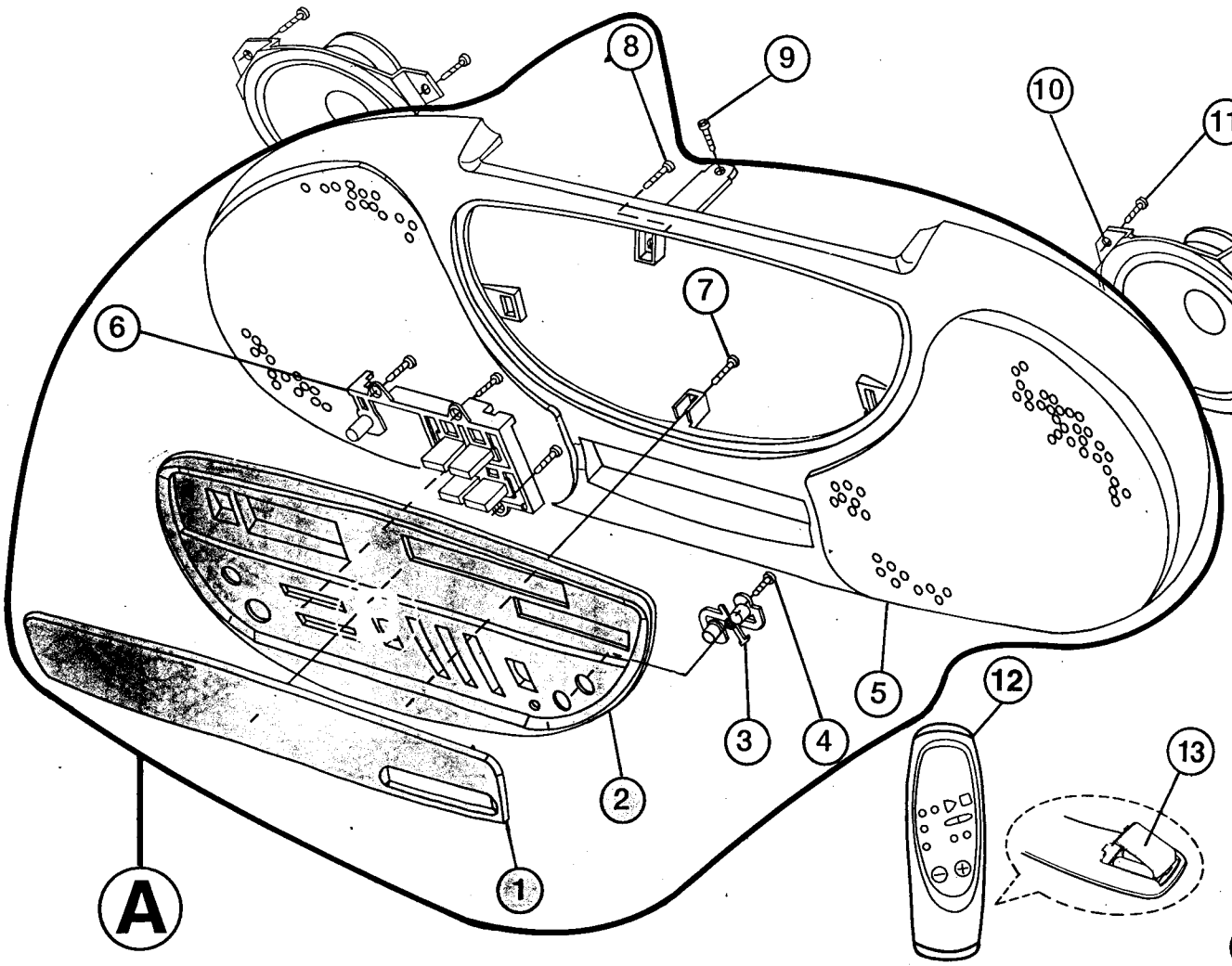

Ref. No.	Part No.	Description	Ref. No.	Part No.	Description
A	3111S-0566A	Front Case Ass'y (2 Band)	2	3720S-0560A	Panel Function (2 Band)
	3111S-0566B	Front Case Ass'y (SW Band)		3720S-0560B	Panel Function (SW Band)
	3111S-0566E	Front Case Ass'y (2 Band FOR USA,CSA)		3720S-0560D	Panel Function (LW Band)
	3111S-0566D	Front Case Ass'y (LW Band)		3720S-0560J	Panel Function (FOR AURORA)
	3111S-0566L	Front Case Ass'y (FOR AURORA)		3720S-0560L	Panel Function (FOR BUY BEST)
	3111S-0566M	Front Case Ass'y (FOR BUY BEST)	3	4940S-0565A	Knob Volume Key
B	3721S-0560A	Function Panel Ass'y (2 Band).	4	353-028A	Screw 2 x 6
	3721S-0560B	Function Panel Ass'y (SW Band)	5	3111SU0565A	Front Case with Grille
	3721S-0560E	Function Panel Ass'y (2 Band FOR USA, CSA)	6	4940S-0560A	Knob CD Key
	3721S-0560D	Function Panel Ass'y (LW Band)	7	353-025E	Screw 3 x 6
	3721S-0560K	Function Panel Ass'y (FOR AURORA)	8	353-025E	Screw 3 x 6
	3721S-0560L	Function Panel Ass'y (FOR BUY BEST)	9	353-025C	Screw 3 x 10
1	3790S-0560A	Window Scale (2 Band)	10	541-887C	Speaker 100mm, 3.2Ω, 5W
	3790S-0560B	Window Scale (SW Band)	11	353-052C	Screw 3 x 10
	3790S-0560E	Window Scale (2 Band FOR USA, CSA)	12	6710S-A000A	Remote Controller (with Cover)-FOR G/S
	3790S-0560D	Window Scale (LW Band)		6710S-A000H	Remote Controller (with Cover)-FOR AURORA
	3790S-0560G	Window Scale (FOR AURORA)		6710S-A000J	Remote Controller (with Cover)-FOR BUY BEST
	3790S-0560H	Window Scale (FOR CIS)	13	221-180A	Battery Cover

■ R

Ref. No.	Part
A	3141SU0
B	3111SU0
C	6871S-22
	6871S-22
	6871S-22
	6871S-22
	6871S-22
	6871S-22
1	4940S-05
2	4940S-05
3	361-565A
4	4940S-05
5	4940S-05
6	353-025C
7	6871SV22
8	3140S-05
9	353-025K
10	6871S-21
11	353-025K
12	4930S-05

■ REAR CASE SECTION

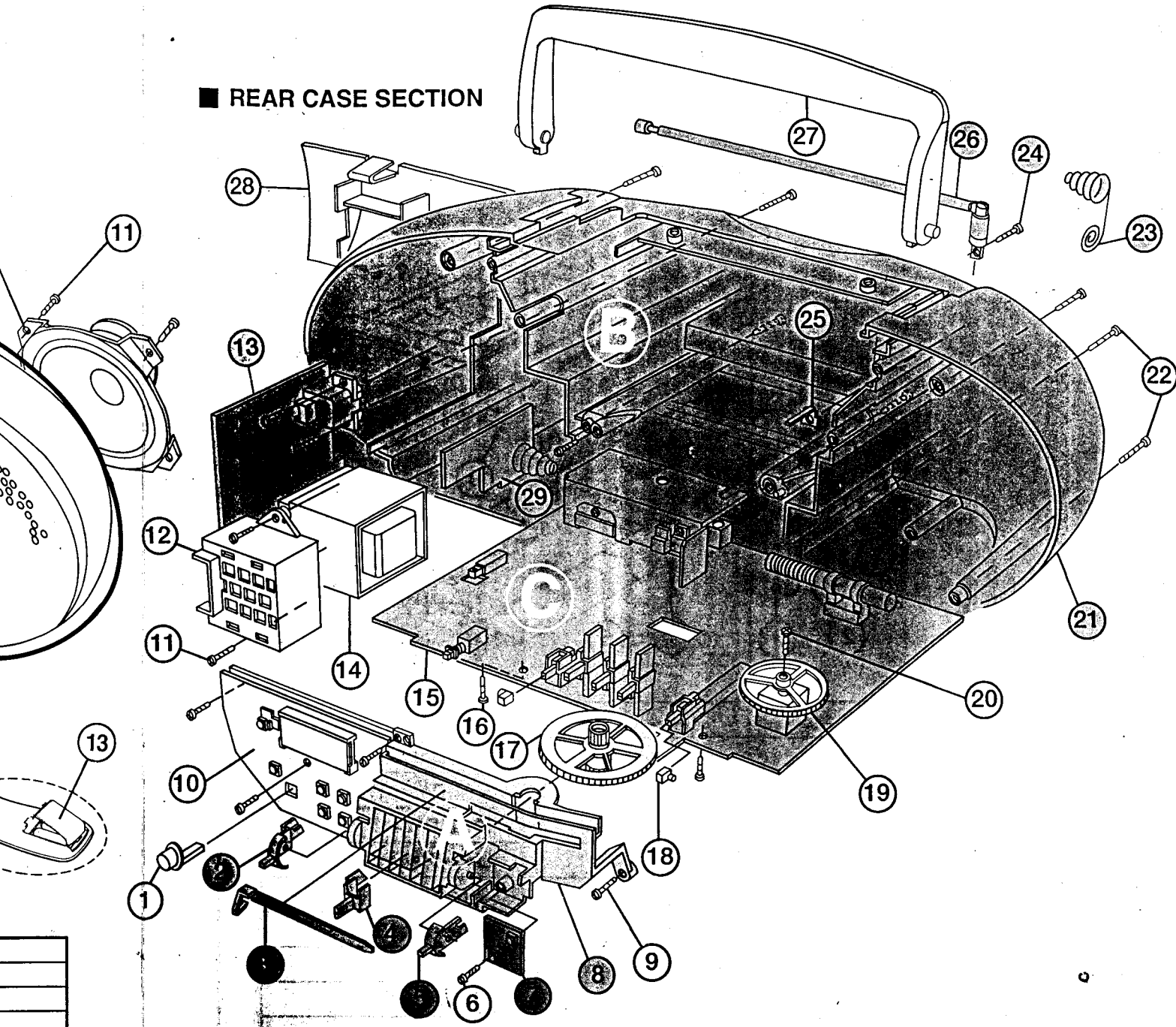

Ref. No.	Part No.	Description
A	3141SU0561A	Tuning Chassis Assembly
B	3111SU0561A	Rear Case Assembly
C	6871S-220AB	Audio Total PCB Ass'y (2 Band, 230V)
	6871S-220AC	Audio Total PCB Ass'y (2 Band 110V)
	6871S-220AD	Audio Total PCB Ass'y (2 Band, 110V/220V)
	6871S-220CA	Audio Total PCB Ass'y (LW Band)
	6871S-220BA	Audio Total PCB Ass'y (SW Band)
	6871S-220BB	Audio Total PCB Ass'y (SW Band, FOR CIS)
1	4940S-0561A	Knob Push
2	4940S-0566A	Knob Function
3	361-565A	Pointer Gear
4	4940S-0563A	Knob EQ
5	4940S-0566B	Knob Band
6	353-025G	Screw 3 x 10
7	6871SV220AA	Volume PCB Assembly
8	3140S-0561A	Tuning Chassis
9	353-025K	Screw 3 x 12
10	6871S-21FAA	Key PCB Assembly
11	353-025K	Screw 3 x 12
12	4930S-0561A	Holder P/T

Ref. No.	Part No.	Description
13	6871SP220AD	Power PCB Assembly (110V)
	6871SP220AB	Power PCB Assembly (230V)
	6871SP220AC	Power PCB Assembly (110V/220V)
14	6170S-013ZH	P/T 115/230V, 50/60Hz
15	6871SA220AA	Main+RF PCB Ass'y (2 Band)
	6871SA220AB	Main+RF PCB Ass'y (FOR USA, CSA)
	6871SL220AA	Main+RF PCB Ass'y (LW Band)
	6871SS220AA	Main+RF PCB Ass'y (SW Band)
	6871SS220AB	Main+RF PCB Ass'y (SW Band, FOR CIS)
16	353-025G	Screw 3 x 10
17	4940S-0564A	Knob Tuning
18	4930S-0112A	Holder Switch
19	432-560A	Pulley Gear
20	1MRC0261418	Screw 2.6 x 4
21	3110S-0561A	Rear Case
22	353-025R	Screw 3 x 20
23	442-203D	Spring Battery
24	353-025K	Screw 3 x 12
25	254-013B	Contact Antenna
26	532-800B	Rod Antenna
27	261-560A	Handle
28	221-243B	Battery Cover
29	6871SB220AA	Battery PCB Assembly

DECK SECTION
(NON AUTOREVERSE
DECK: CD-560 SERIES)

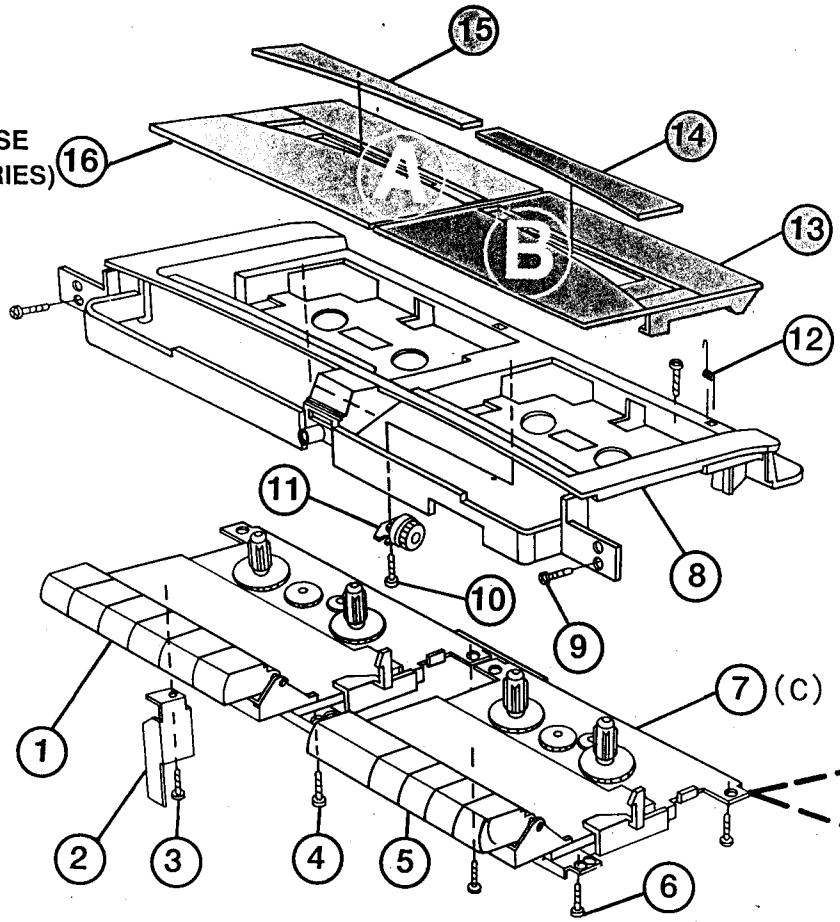

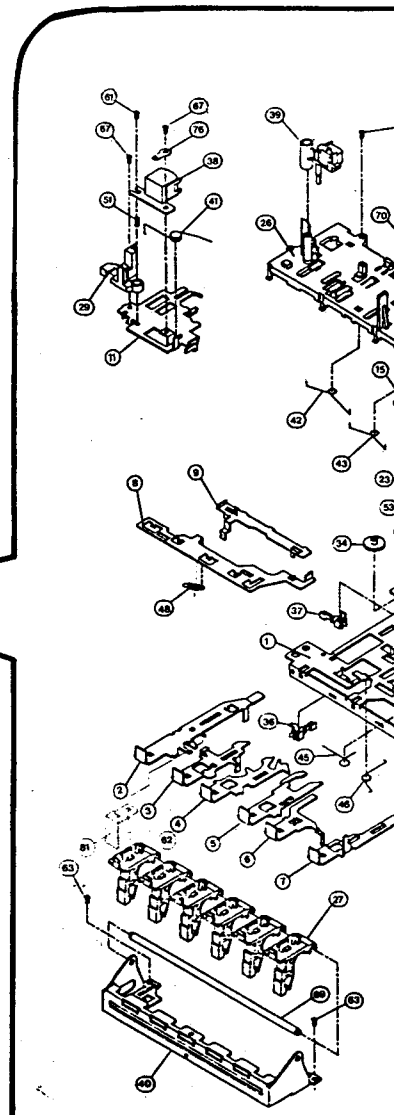

Ref. No.	Part No.	Description
A	3581S-0560A	CST Door - L Assembly
B	3581S-0560B	CST Door - R Assembly
1	4940S-0562A	Knob Deck-L
2	333-561A	Lever Record
3	353-022K	Screw 2 x 3
4	353-025G	Screw 3 x 10
5	4940S-0562B	Knob Deck-R
6	353-025G	Screw 3 x 10
7	410-380Z	Deck Assembly
8	3110S-0562A	Top Case
9	353-025G	Screw 3 x 10
10	353-025G	Screw 3 x 10
11	444-115A	Damper
12	442-864N	Spring
13	3580S-0560B	CST Door-R
14	3790S-0561B	CST Window-R
15	3790S-0561A	CST Window-L
16	3580S-0560A	CST Door-L

Ref. No.	Part No.	
C	419-503E	DECK A
16	99S-0145	T.U REE
17	99S-0040	PINCH /
19	99S-2012	FLYWHI
20	99S-2013	FLYWHI
21	99S-2014	MOTOR
22	99S-0183	F.R ARM
23	99S-2016	S REEL
24	99S-0188	SENSOI
25	99S-0180	PAUSE
27	99S-0186	BUTTON
32	99S-0160	LEVER I
34	99S-2024	F.F GEA
35	99S-0181	PAUSE

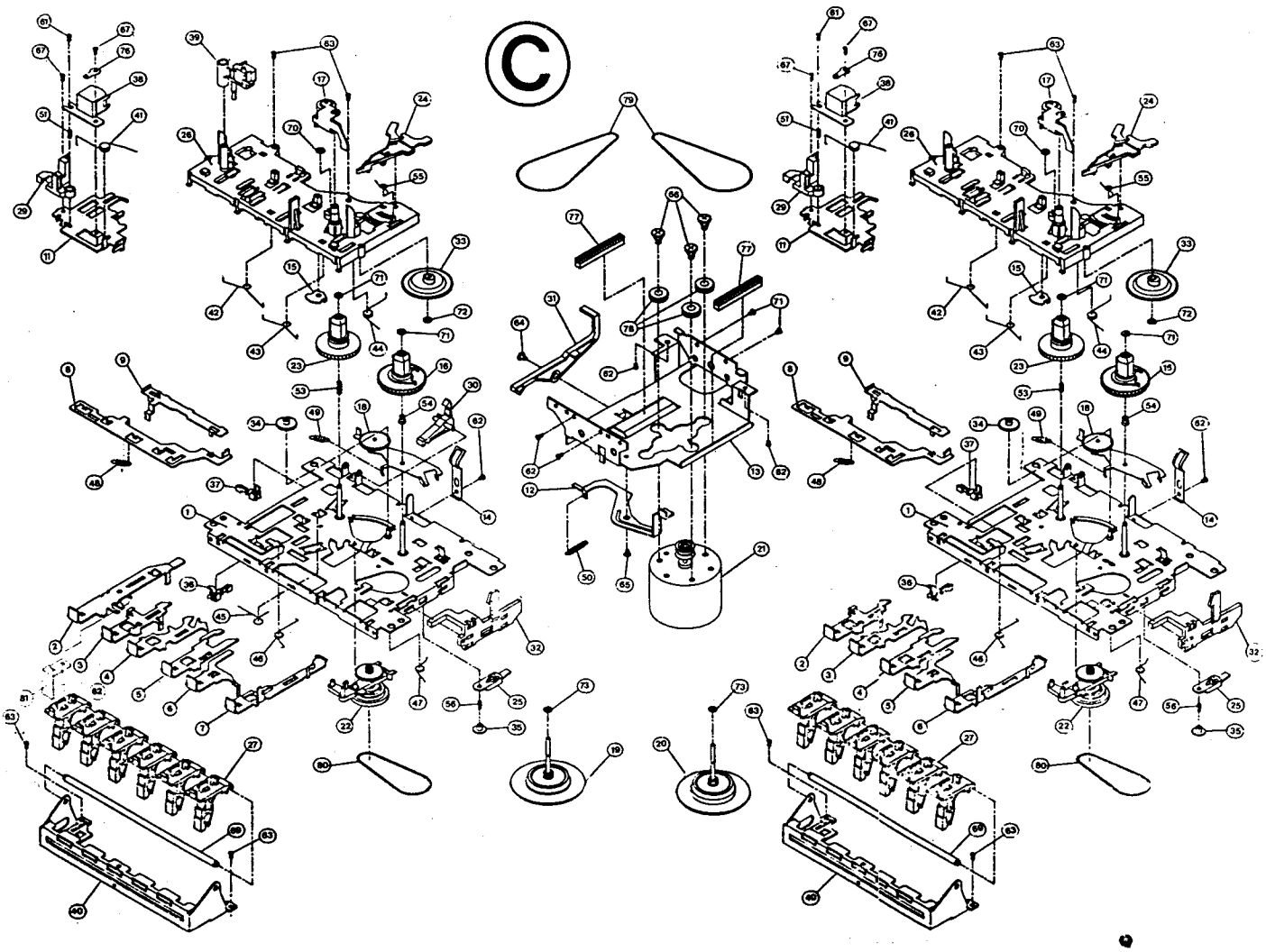

Ref. No.	Part No.	Description
C	419-503E	DECK ADR2018FW
16	99S-0145	T.U REEL A'Y/ADR28-010
17	99S-0040	PINCH ARM A'Y/ADR26-001
19	99S-2012	FLYWHEEL GEAR-S A'Y/ADR15-022
20	99S-2013	FLYWHEEL GEAR-D A'Y/ADR15-010
21	99S-2014	MOTOR AY(EG530YD-9B) ADR24-014
22	99S-0183	F.R ARM ASS'Y
23	99S-2016	S REEL GEAR 11128-00045AA
24	99S-0188	SENSOR ARM
25	99S-0180	PAUSE LOCK CAM
27	99S-0186	BUTTON KNOB
32	99S-0160	LEVER EJECT F 11134-01220AA
34	99S-2024	F.F GEAR 11128-00055AA
35	99S-0181	PAUSE CAP

Ref. No.	Part No.	Description
36	99S-2026	LEAF SW(1541XACV)70022-02002CA
37	99S-2027	LEAF SW(1716CV) 70022-02003CA
38	99T-2783	PLAY HEAD MS15R-AA2N1 SM3-0022
39	99S-1202	MG ARM AY PH-K380-MS16A, 18-004
40	99S-0184	BUTTON CHASSIS
56	99S-0182	PAUSE LEVER SPRING
63	99S-0187	SCREW-T,PH+ M2X8
69	99S-0185	BUTTON SHAFT
70	99S-0083	MYLAR S/S1.6X5 51010-01603AA
71	99S-0087	POLY W/S 51010-01603BA
73	99S-2040	POLY WASHER/51000-02101AA
79	99S-0159	BELT MEIN 51424-05910BA
80	99S-0049	SUB BELT 51424-03510BA

■ DECK SECTION
(AUTOREVERSE DECK:
CD-565 SERIES)

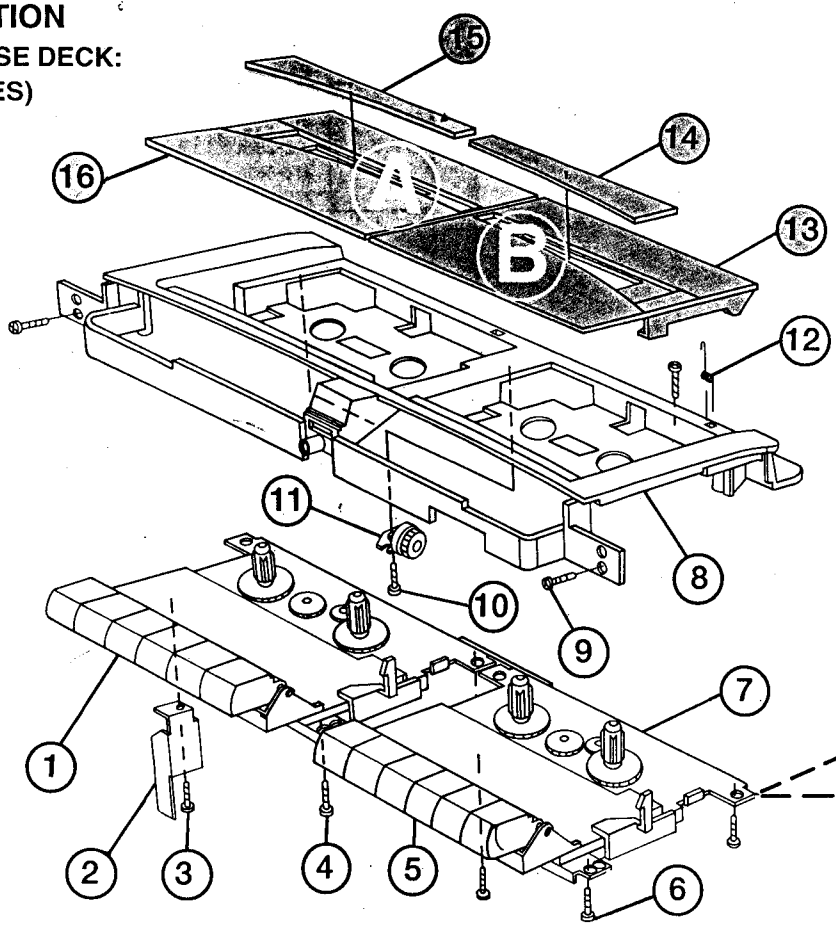

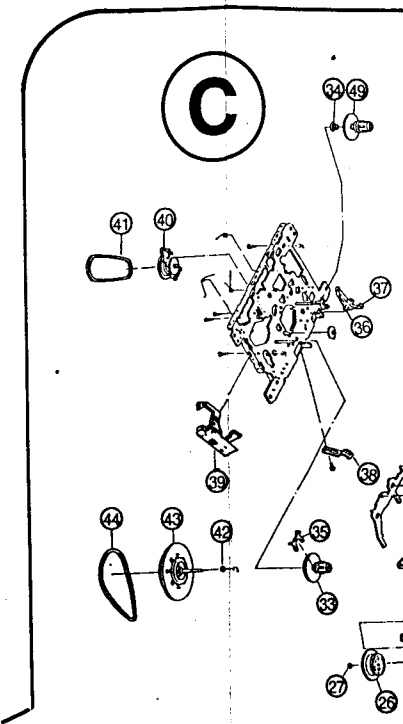

Ref. No.	Part No.	Description
A	3581S-0560A	CST Door - L Assembly
B	3581S-0560E	DST Door- R Assembly
1	4940S-0567A	Knob Deck-L
2	333-561A	Lever Record
3	353-022K	Screw 2 x 3
4	353-025G	Screw 3 x 10
5	4940S-0567B	Knob Deck-R
6	353-025G	Screw 3 x 10
7	410-385Z	Deck Assembly
8	3110S-0562A	Top Case
9	353-025G	Screw 3 x 10
10	353-025G	Screw 3 x 10
11	444-115A	Damper
12	442-864N	Spring
13	3580S-0560E	CST Door-R
14	3790S-0561C	CST Window-R
15	3790S-0561A	CST Window-L
16	3580S-0560A	CST Door-L

Ref. No.	Part No.	
C	419-112E	Y
20	99T-0531	E
21	99T-2783	P
22	99Y-0438	M
23	99Y-0028	S
24	99Y-0018	P
25	99Y-0019	S
26	99Y-0445	C
27	99Y-0446	P
28	99Y-0027	P
29	99Y-0425	P
30	99Y-0030	P
31	99Y-0031	P
32	99Y-0454	L
33	99Y-0045	T
34	99Y-0463	E
35	99Y-0464	S
36	99Y-0050	F
37	99Y-0049	F
38	99Y-0466	F
39	99Y-0475	E
40	99Y-0062	F
41	99Y-0063	F
42	99Y-0064	F
43	99Y-0065	F
44	99Y-0067	F

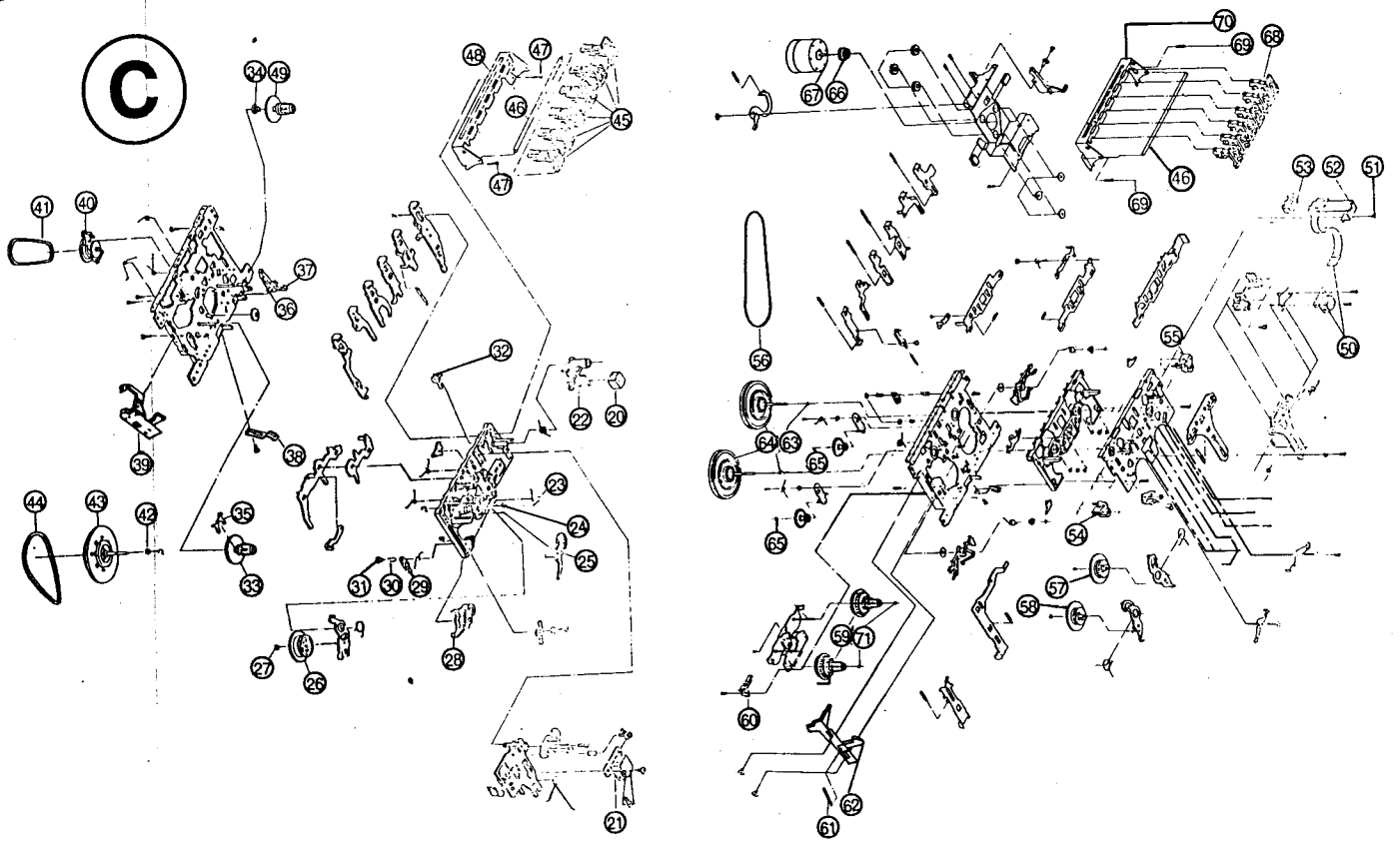

Ref. No.	Part No.	Description
C	419-112E	YN-921ZSW-24
20	99T-0531	Erase Head TDK-6PA
21	99T-2783	Play Head MS15R-AA2N1
22	99Y-0438	M.G Arm
23	99Y-0028	Sensing Lever SP/B
24	99Y-0018	Polyslide Washer/Cut
25	99Y-0019	Sensing Lever
26	99Y-0445	Cam Gear
27	99Y-0446	Polyslide Washer/Cut
28	99Y-0027	Pinch Roller Assy
29	99Y-0425	Pause Cam
30	99Y-0030	Pause Cam Spring
31	99Y-0031	Pause Cap
32	99Y-0454	Leap Switch
33	99Y-0045	Take Up Reel Assy
34	99Y-0463	B.T Spring
35	99Y-0464	Sensor
36	99Y-0050	Rec. Safety Lever Cap
37	99Y-0049	Rec. Safety Lever
38	99Y-0466	Packing Spring
39	99Y-0475	Eject Slide Lever
40	99Y-0062	R.F Clutch Arm Assy
41	99Y-0063	R.F Belt
42	99Y-0064	Poly Washer
43	99Y-0065	Flysheel Pulley Ay (A)
44	99Y-0067	Main Belt

Ref. No.	Part No.	Description
45	99Y-0428	Operation Lever
46	99Y-0429	Operation Lever Shaft
47	99Y-0430	Screw
48	99Y-0431	Operation Frame
49	99Y-0476	Supply Reel Ass'y
50	99Y-0432	Play Head BD-24F
51	99Y-0484	Screw
52	99Y-0485	Play Head SW Frame
53	99Y-0487	Play Head SW
54	99Y-0329	Pinch Roller Arm F
55	99Y-0330	Pinch Roller Arm R
56	99Y-0361	Main Belt "A"
57	99Y-0552	Deduction Gear R
58	99Y-0553	Deduction Gear F
59	99Y-0559	Reel Gear Ass'y
60	99Y-0562	Leaf Switch
61	99Y-0564	Eject Slide Lever SP
62	99Y-0565	Eject Slide Lever
63	99Y-0571	Capstan Washer
64	99Y-0572	Capstan Flywheel A'y
65	99Y-0573	Washer
66	99Y-0576	Motor Pulley
67	99Y-0189	Motor EG530YD9BH
68	99Y-0582	Button
69	99Y-0583	Screw
70	99Y-0584	Botton Frame
71	99Y-0586	Lock Washer

■ CDP SECTION

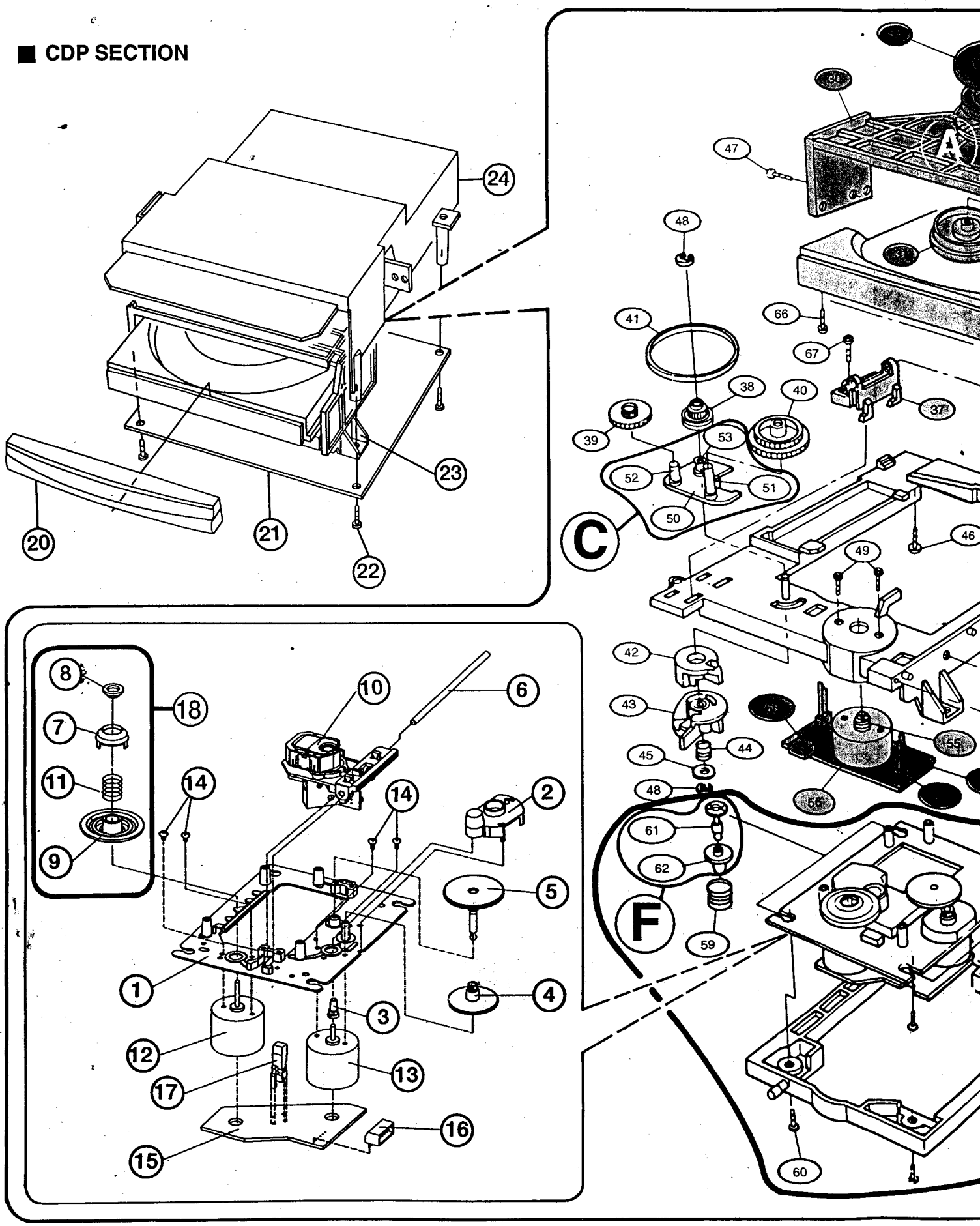
24
23
20
21
22
47
48
41
66
67
38
40
37
39
53
52
51
50
C
46
49
42
43
44
45
48
55
56
61
62
F
59
60
8
7
11
9
18
10
6
14
14
2
5
1
4
3
12
13
17
16
15

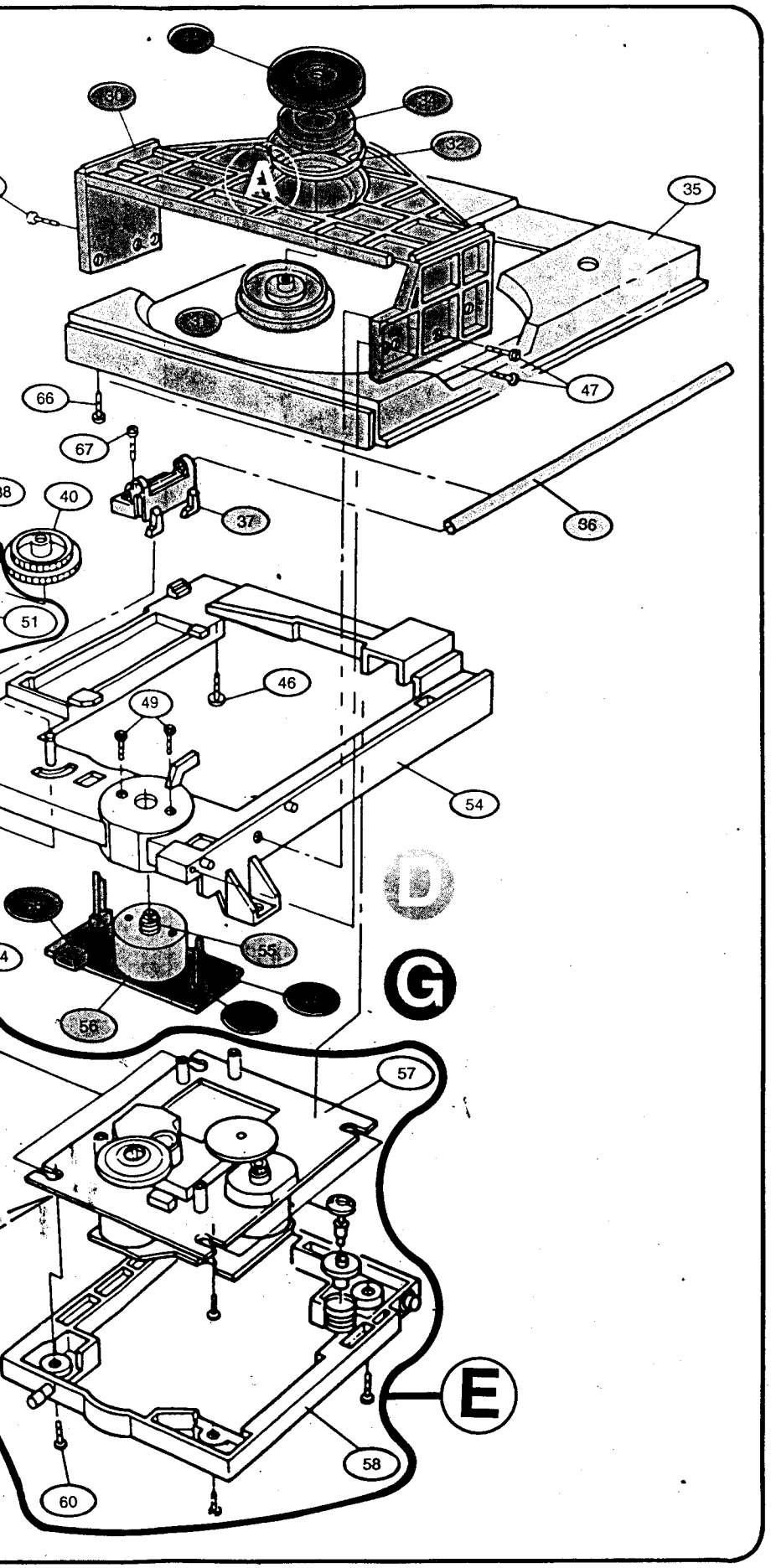

: not serviceal

Ref. No.	Part No.	Description
A	322-321D	Supporter Clamp Ay
B	318-317A	Tray Disc Ay
C	252-252A	Plate Scale Ay
D	414-043A	Motor Ay
E	225-228D	Base, Pick-up
F	322-324A	Supporter Spring Ay
G	6870S-158AA	PWB Ay
1	88W-0241	Chassis Deck
2	88W-0242	Cover Gear
3	88W-0243	Gear-A
4	88W-0244	Gear-B
5	88W-0245	Gear-C
6	88W-0246	Shaft Pick-up
7	88W-0247	Center Ring
8	88W-0248	Center Knob
9	88W-0249	Turn Table
10	88W-0250	Pick-up S0H90T4N
11	88W-0251	Spring Ay
12	88W-0252	Spindle Motor
13	88W-0253	Feed Motor
14	88W-0254	Screw PH
15	88W-0255	P.C. Board
16	88W-0256	Connector Wafer
17	88W-0257	Leaf Switch
18	88W-0240	Turn Table Ass'y
19	–	Not Used
20	3580S-0562A	Door Tray
21	6871S-223AA	CD PCB Assembly
22	353-025K	Screw 3 x 12
23	411-044F	Mechanism Assembly CDM-X203
24	3140S-0560A	Chassis MD
25~29	–	Not Used
30	322-322A	Supporter Clamp
31	327-013C	Clamp Disc
32	384-064B	Guide Magnet
33	221-527A	Cover Magnet
34	524-012A	Cover Clamp Magnet
35	318-318A	Tray Disc
36	423-423A	Shaft Loading
37	384-384A	Guide Shaft
38	435-435A	Gear Pulley
39	435-436A	Gear Middle
40	435-437A	Gear Loading
41	451-145U	Belt Counter
42	374-374A	Cam Ay Up
43	374-375A	Cam Ay Down
44	442-778A	Spring Com
45	354S354A	Washer Plate
46	353S353B	Screw
47	353S353C	Screw
48	345S345A	Ring-E
49	353S353F	Screw
50	252-253A	Plate Scale Ay
51	356-356A	Pin Pulley
52	356-357A	Pin Middle
53	341-341A	Bushing Pulley
54	225-225A	Base Loading Ay
55	432-432A	Pulley Motor
56	414-044A	Motor (RF500TB-14415;MABUCHI)
57	411-350D	Mecha Ay (CMS-V30NG6, S/S)
58	225-229A	Base Pick-up
59	442-717A	Spring
60	353S353A	Screw
61	322-323A	Supporter Spring
62	477-106A	Rubber
63	6870S-159AA	PWB Loading Ay
64	558-041A	S/W Special (MSW18020MVLO)
65	563E010A	Connector Ay Wafer (JST S5B-PH(5P
66	353S353D	Screw
67	353S353E	Screw

■ POWER CORDS

● For U.K.

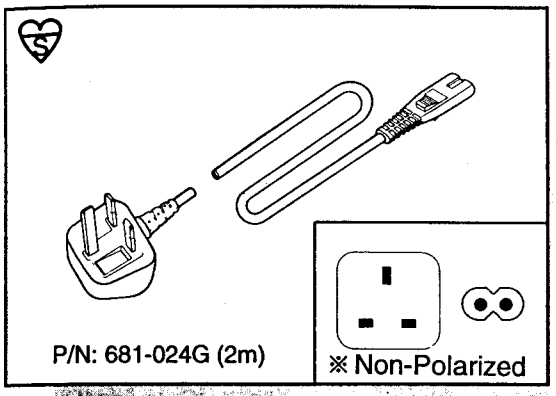

● For Australia

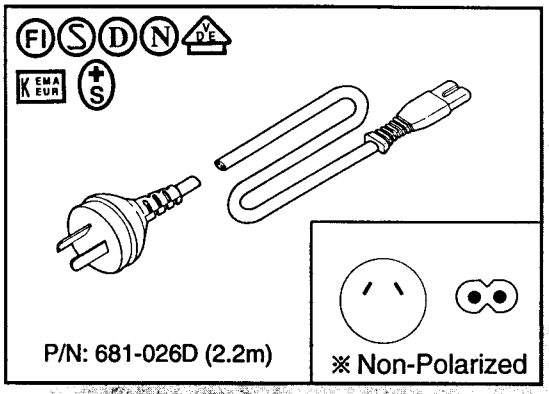

● For General

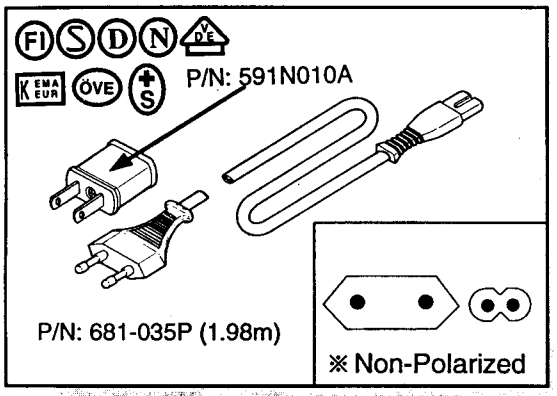

● For Japan

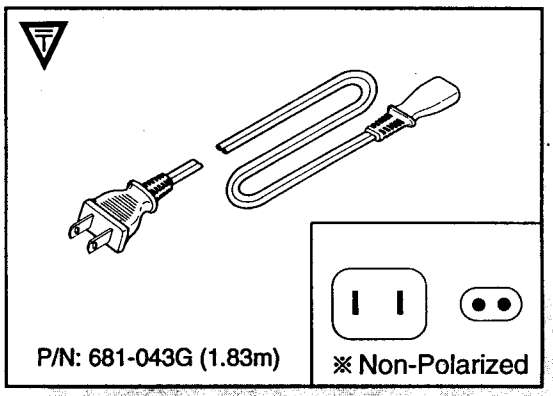

● For Canada

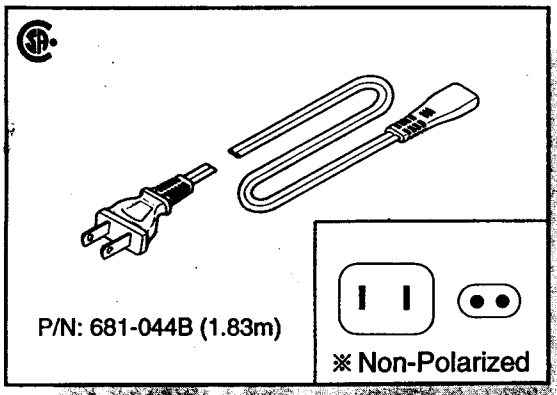

● For U.S.A. and Canada

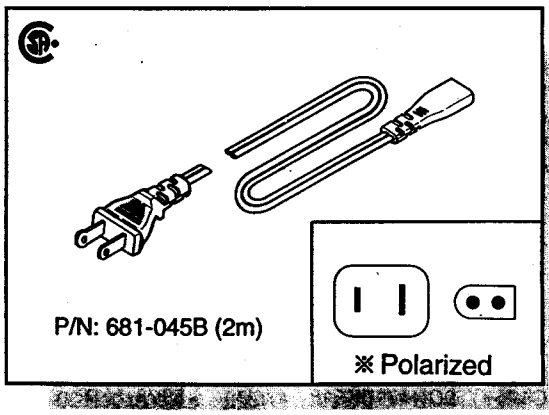

REPLACEMENT PARTS LIST

NOTE: 1. Parts marked with " ⚠ " are important for maintaining the safety of the set. Be sure to replace these parts with specified ones for maintaining the safety and performance of the set.
2. Option :

CERAMIC FILTER

REF. NO.	PART NO.	DESCRIPTION
BPF1	616-011G	BPMB8(88-108MHZ)
CF1	616-003D	SFU455B AM MURATA
CF2	616-008B	SFE10.7MS2(RD) 230K
CF3	616-030C	CDA10.7MG16-A(RD)
CF420	616-020J	CSA2.00MG MURATA

CONNECTOR

REF. NO.	PART NO.	DESCRIPTION
CN1	GFFF200F	GSIL-G06/IL-J06(21)200
CN10	IEE+200F	GS IL-G05 (21) 200
CN2	GBBF100H	GSIL-G02/IL-J02(21)140
CN3	IAC%002O	GS IL-G03 259#28 280
CN4	563-923C	GS IL-G03 2791#30-3C 200
CN5	EMA-100H	KET-ST730090 HDT-30012-2
CN501	563-684F	PHR-08/IL-S08 2851
CN502	563-706A	JST PHR-08RD/IL-S08RD 180
CN503	563-801V	IL-S06/IL-S06 1571
CN504	563-801U	IL-S05/IL-S05 1571
CN6	GCCF200J	GSIL-G03/IL-J03(21)280(S)
CN601	563-701U	IL-S09/IL-T09 1751#28 300
CN602	563-701J	GIL-07/IL-T07 1751#28 240
CN603	GEEF100H	GSIL-G05/IL-J05(21)140(S)
PN1	561-716F	WAFER,G/S GIL-G-06P-S3L2-E
PN10	561-715E	WAFER,G/S GIL-G-05P-S3T2-E
PN2	561-716B	WAFER,G/S GIL-G-02P-S3L2-E
PN3	561-715C	WAFER,G/S GO:-G-03P-S3T2-E
PN4	561-715D	WAFER,G/S GIL-G-04P-S3T2-E
PN501	561-711H	WAFER,G/S GIL-S-08P-S2T2-EF
PN502	561-685H	WAFER,KOREA MOLEX 53014-0810
PN503	561-711F	WAFER,G/S GIL-S-06P-S2T2-EF
PN504	561-711E	WAFER,G/S GIL-S-05P-S2T2-EF
PN520	561-711J	WAFER,G/S GIL-S-10P-S2T2-EF
PN521	561-711J	WAFER,G/S GIL-S-10P-S2T2-EF
PN6	561-716C	WAFER,G/S GIL-G-03P-S3L2-E
PN601	561-712I	WAFER,G/S GIL-S-09P-S2L2-EF
PN602	561-712G	WFER,G/S GIL-S-07P-S2L2-EF
PN603	561-716E	WAFER,G/S GIL-G-05P-S3L2-E
PN9	561-716D	WAFER,G/S GIL-G-04P-S3L2-E

CAPACITOR

REF. NO.	PART NO.	DESCRIPTION
[redacted]	[redacted]	[redacted]
C10	0CN2230H948	0.022UF 25V Z
C101	0CN8210K518	820P 50V K
C102	0CN5610K518	560P 50V K
C103	0CN1010K518	100P 50V K
C104	0CN1010K518	100P 50V K
C105	0CE4766F618	47M SMS 16V M
C106	0CQ1831N409	0.018U 100V J
C107	0CE1056K618	1.0M SMS 50V M
C108	0CE1056K618	1.0M SMS 50V M
C109	0CN2220F668	2200P 16V M
C11	0CN2230H948	0.022UF 25V Z
C110	0CE4766F618	47M SMS 16V M
C111	0CE4756K618	4.7M SMS 50V M
C112	0CN4720F668	4700P 16V M
C113	0CQ2721N409	0.0027M 100V J
C12	0CX2400K478	24P 50V J
C120	0CE4766F618	47M SMS 16V M
C121	0CE4756K618	4.7M SMS 50V M
C122	0CE2266F618	22M SMS 16V M
C123	0CE3376F618	330M SMS 16V M
C124	0CE4756K618	4.7M SMS 50V M
C125	0CN1810K518	180P 50V K
C126	0CN4710K518	470P 50V K
C127	0CQ1521N409	0.0015U 100V J
C128	0CE1076D618	100M SMS 10V M
C129	0CQ1531N409	0.015U 100V J
C13	0CX4R70K578	4.7P 50V K
C130	0CN4720F668	4700P 16V M
C131	0CN1030F678	0.01M 16V M
C14	0CC2000K465	20P 50V J
C15	0CX2400K478	24P 50V J
C151	0CN8210K518	820P 50V K
C152	0CN5610K518	560P 50V K
C153	0CN1010K518	100P 50V K
C154	0CN1010K518	100P 50V K
C155	0CE4766F618	47M SMS 16V M
C156	0CQ1831N409	0.018U 100V J
C157	0CE1056K618	1.0M SMS 50V M
C158	0CE1056K618	1.0M SMS 50V M
C159	0CN2220F668	2200P 16V M
C16	0CN2230H948	0.022UF 25V Z F
C160	0CE4766F618	47M SMS 16V M
C161	0CE4756K618	4.7M SMS 50V M
C162	0CN4720F668	4700P 16V M
C163	0CQ2721N409	0.0027M 100V J
C17	0CE1066J618	10M SMS 35V M
C18	0CE4746K618	0.47M SMS 50V M
C19	0CN3310K518	330P 50V K
C20	0CE4756K618	4.7M SMS 50V M
C201	0CE1056K618	1.0M SMS 50V M
C202	0CE1056K618	1.0M SMS 50V M
C203	0CN3310K518	330P 50V K
C204	0CN1030F678	0.01M 16V M
C205	0CE1046K618	0.1M SMS 50V M
C206	0CN3320F668	3300P 16V M
C207	0CQ3331N409	0.033U 100V J

REF. NO.	PART NO.	DESCRIPTION
C208	0CE1056K618	1.0M SMS 50V M
C209	0CE1056K618	1.0M SMS 50V M
C21	0CN1030F678	0.01M 16V M
C210	0CE2276D618	220M SMS 10V M
C211	0CX3000K478	30P 50V J
C213	0CN1040K948	0.1UF 50V Z
C214	0CN1040K948	0.1UF 50V Z
C215	0CE1066J618	10M SMS 35V M
C217	0CE1076F618	100M SMS 16V M
C219	0CN2230H948	0.022UF 25V Z
C22	0CE1046K618	0.1M SMS 50V M
C221	0CX3000K478	30P 50V J
C222	0CE1056K618	1.0M SMS 50V M
C223	0CE4756K618	4.7M SMS 50V M
C224	0CE2256K618	2.2M SMS 50V M
C225	0CE2276D618	220M SMS 10V M
C226	0CE2276D618	220M SMS 10V M
C227	0CE4776D618	470M SMS 10V M
C23	0CQ6831N409	0.068U 100V J
C231	0CE2256K618	2.2M SMS 50V M
C232	0CE2256K618	2.2M SMS 50V M
C233	0CE2256K618	2.2M SMS 50V M
C234	0CE2256K618	2.2M SMS 50V M
C24	0CE1056K618	1.0M SMS 50V M
C25	0CE4756K618	4.7M SMS 50V M
C251	0CE1056K618	1.0M SMS 50V M
C252	0CE1056K618	1.0M SMS 50V M
C253	0CN3310K518	330P 50V K
C254	0CN1030F678	0.01M 16V M
C255	0CE1046K618	0.1M SMS 50V M
C256	0CN3320F668	3300P 16V M
C257	0CQ3331N409	0.033U 100V J
C258	0CE1056K618	1.0M SMS 50V M
C259	0CE1056K618	1.0M SMS 50V M
C26	0CE3366F618	33M SMS 16V M
C27	0CN2230H948	0.022UF 25V Z
C28	0CN2230H948	0.022UF 25V Z
C281	0CE2256K618	2.2M SMS 50V M
C282	0CE2256K618	2.2M SMS 50V M
C283	0CE2256K618	2.2M SMS 50V M
C284	0CE2256K618	2.2M SMS 50V M
C301	0CE1056K618	1.0M SMS 50V M
C302	0CN1020K518	1000P 50V K
C303	0CE1076D618	100M SMS 10V M
C304	0CE4766F618	47M SMS 16V M
C305	0CE1076F618	100M SMS 16V M
C306	0CE1086F630	1000M SMS 16V M
C307	0CQ1542N409	0.15U S 100V J
C308	0CE4756K618	4.7M SMS 50V M
C309	0CE4746K618	0.47M SMS 50V M
C31	0CN2230H948	0.022UF 25V Z
C310	0CE4766H618	47M SMS 25V M
C311	0CE1076H618	100M SMS 25V M
C312	0CE3366F618	33M SMS 16V M
C32	0CE1076D618	100M SMS 10V M
C33	0CQ1031N409	0.01U 100V J
C34	0CQ1031N409	0.01U 100V J
C35	0CE1056K618	1.0M SMS 50V M
C351	0CE1056K618	1.0M SMS 50V M
C352	0CN1020K518	1000P 50V K
C353	0CE1076D618	100M SMS 10V M
C355	0CE1076F618	100M SMS 16V M
C356	0CE1086F630	1000M SMS 16V M
C357	0CQ1542N409	0.15U S 100V J
C36	0CE1056K618	1.0M SMS 50V M
C37	0CQ1531N409	0.015U 100V J
C38	0CQ1531N409	0.015U 100V J
C502	0CX3300K408	33P 50V J
C503	0CE1076D618	100M SMS 10V M

REF. NO.	PART NO.	DESCRIPTION
C504	0CN4720F668	4700P 16V M
C505	0CQ1041N409	0.1U 100V J
C506	0CX4R70K518	4.7P 50V K
C507	0CN1040K948	0.1UF 50V Z
C508	0CN2220F668	2200P 16V M
C509	0CN4720F668	4700P 16V M
C510	0CN4710K518	470P 50V K
C511	0CN6820F668	6800P 16V M
C512	0CE3346K618	0.33M SMS 50V M
C513	0CX4700K408	47P 50V J
C514	0CE1066J618	10M SMS 35V M
C515	0CQ6831N409	0.068U 100V J
C516	0CE4746K618	0.47M SMS 50V M
C517	0CQ1031N409	0.01U 100V J
C518	0CE4746K618	0.47M SMS 50V M
C519	0CQ3331N409	0.033U 100V J
C520	0CX6800K408	68P 50V J
C521	0CE3366F618	33M SMS 16V M
C522	0CE4756K618	4.7M SMS 50V M
C523	0CN1040K948	0.1UF 50V Z
C524	0CQ1041N409	0.1U 100V J
C525	0CQ1041N409	0.1U 100V J
C526	0CN1030F678	0.01M 16V M
C527	0CN1030F678	0.01M 16V M
C528	0CN8220F678	8200P 16V M
C529	0CN1030F678	0.01M 16V M
C530	0CX8R20K518	8.2P 50V K
C532	0CQ3331N409	0.033U 100V J
C533	0CE1076D618	100M SMS 10V M
C534	0CN1020K518	1000P 50V K
C535	0CN1220F668	1200P 16V M
C536	0CN1030F678	0.01M 16V M
C537	0CE4766D618	47M SMS 10V M
C538	0CN1220F668	1200P 16V M
C539	0CE1056K618	1.0M SMS 50V M
C541	0CN1010K518	100P 50V K
C542	0CN1010K518	100P 50V K
C543	0CE1056K618	1.0M SMS 50V M
C544	0CN1220F668	1200P 16V M
C545	0CN1220F668	1200P 16V M
C546	0CN1030F678	0.01M 16V M
C547	0CE4776D618	470M SMS 10V M
C549	0CX3900K408	39P 50V J
C550	0CN2230H948	0.022UF 25V Z
C551	0CX3900K408	39P 50V J
C552	0CQ4731N409	0.047U 100V J
C553	0CN1520F568	1500P 16V K
C555	0CE1073D619	100M SRE 10V M
C557	0CE1073D619	100M SRE 10V M
C558	0CN1040K948	0.1UF 50V Z
C559	0CN1040K948	0.1UF 50V Z
C560	0CE4756K618	4.7M SMS 50V M
C561	0CN1030F678	0.01M 16V M
C562	0CE1076D618	100M SMS 10V M
C565	0CN1030F678	0.01M 16V M
C566	0CN1040K948	0.1UF 50V Z
C567	0CE4776D618	470M SMS 10V M
C571	0CE4756K618	4.7M SMS 50V M
C572	0CE4756K618	4.7M SMS 50V M
C575	0CN1030F678	0.01M 16V M
C576	0CE1076D618	100M SMS 10V M
C578	0CN1510K518	150P 50V K
C579	0CN1510K518	150P 50V K
C580	0CN1010K518	100P 50V K
C581	0CN1010K518	100P 50V K
C582	0CN1020K518	1000P 50V K
C583	0CN2230H948	0.022UF 25V Z
C593	0CN1030F678	0.01M 16V M
C594	0CE1076D618	100M SMS 10V M

REF. NO.	PART NO.	DESCRIPTION
C595	0CE4776D618	470M SMS 10V M
C596	0CE2276D618	220M SMS 10V M
C601	0CN8220F678	8200P 16V M
C602	0CN1010K518	100P 50V K
C603	0CX2200K408	22P 50V J
C604	0CX2200K408	22P 50V J
C605	0CN1030F678	0.01M 16V M
C606	0CE4763F619	47M SRE 16V M
C608	0CN1030F678	0.01M 16V M
C609	0CN1030F678	0.01M 16V M
C610	0CN1030F678	0.01M 16V M
C613	0CE4763F619	47M SRE 16V M
C7	0CX6R80K578	6.8P 50V K
C901	0CK2230K945	0.022M 50V Z
C902	0CK2230K945	0.022M 50V Z
C903	0CK2230K945	0.022M 50V Z
C904	0CK2230K945	0.022M 50V Z
C907	624-201F	ER-1632-3300-25-M
C908	0CE4766F618	47M SMS 16V M
C909	0CE4776D618	470M SMS 10V M
C910	0CE3376F618	330M SMS 16V M
C911	0CE3376F618	330M SMS 16V M
C912	0CE2276F618	220M SMS 16V M
C913	0CE3376F618	330M SMS 16V M
C914	0CE2276H618	220M SMS 25V
C915	0CE3376F618	330M SMS 16V M
C916	0CE4766F618	47M SMS 16V M
C917	0CE4766F618	47M SMS 16V M

DIODE

D1	0DD223609AC	KDS2236M AFC 15V
D101	0DD132009AA	1SS132 DETECT,SW
D2	0DD132009AA	1SS132 DETECT,SW
D202	0DD132009AA	1SS132 DETECT,SW
D203	0DD132009AA	1SS132 DETECT,SW
D204	0DD132009AA	1SS132 DETECT,SW
D205	0DD132009AA	1SS132 DETECT,SW
D206	0DD132009AA	1SS132 DETECT,SW
D208	0DD132009AA	1SS132 DETECT,SW
D3	0DD132009AA	1SS132 DETECT,SW
D501	0DD132009AA	1SS132 DETECT,SW
D901	0DD604000CA	PBPC604,BRIDGE
D902	0DD132009AA	1SS132 DETECT,SW

INTEGRATED CIRCUIT

IC1	0IKE812200B	KIA8122AN RF
IC101	0IKE818900A	KIA8189N PRE-AMP
IC201	0IRH382200A	BA3822LS 5DOT GR EQ
IC202	0ISE805400B	S8054ALR
IC203	0ISA652800A	LC6528H-4680 TX U-COM
IC204	0ITO915300A	TC9153AP E-VOLM T/B
IC301	0IKE620000A	KIA6200K (KIA8207K)
IC501	0ISS922000A	KA9220 TY 80-QFP-1420C A
IC502	0ISS927000B	KA9270 ST (DIP) AUDIO FILTE
IC503	0ISS928200B	KS9282B TY DSP FOR CDP
IC504	0IRH620900B	BA6209N MOTOR DRIVER
IC505	0ISS925800A	KA9258D-T1 4CH DRIVER,S/S
IC601	0IHI404816B	HD404816 TY GSHI404816B CD560
IC602	0IMT573009A	PST573E-2 TP 3.9V,MITSUMI

JACK

JK1	571-112B	SHQ9085-01-142/HSJ9014-01-142
JK2	577-005C	SOCKET,AC-IN KC-2103 VDE

LED & LCD

LCD601	659-151H	KXN15390DAP KEC
LED1	0DL340009AA	SLR-34VR70F130
LED601	0DL540009AH	SLR-54VR 80F 215

[redacted]

L101	0LA0102K018	10M K 2.3X3.4 L5 TP
L201	0LA0681K018	6.8M K 2.3X3.4 L5 TP
L3	635-009H	RF FM 3.5T
L301	0LA0331K018	3.3UH K 2.3X3.4 L5 TP
L302	0LA0331K018	3.3UH K 2.3X3.4 L5 TP
L351	0LA0331K018	3.3UH K 2.3X3.4 L5 TP
L4	635-020B	RF(OSC)FM 1-3/4T

[redacted]

L601	0LA1000K018	100M K 2.3X3.4 L5 TP
L7	644N039M	IF MW 7 AH3252-704875

TRANSISTOR

Q1	0TR103009AE	KRC103M TP,KEC(KRC1203)
Q101	0TR103009AE	KRC103M TP,KEC(KRC1203)
Q102	0TR320209AA	KTC3202-TP-Y(KTC1959)
Q103	0TR103009AE	KRC103M TP,KEC(KRC1203)
Q104	0TR102009AF	KRC102M TP,KEC(KRC1202)
Q105	0TR103009AE	KRC103M TP,KEC(KRC1203)

REF. NO.	PART NO.	DESCRIPTION
Q106	0TR126609AA	KTA1266-TP-Y (KTA1015)
Q201	0TR319809AD	KTC3198L-GR TP,
Q202	0TR111009AD	KRC111M TP,KEC
Q203	0TR126609AA	KTA1266-TP-Y (KTA1015)
Q204	0TR111009AD	KRC111M TP,KEC
Q205	0TR111009AD	KRC111M TP,KEC
Q251	0TR319809AD	KTC3198L-GR TP(KTC732TM)
Q301	0TR130209AA	KTD1302 MUTING TP,KEC
Q302	0TR102009AE	KRA102M TP,KEC(KRA2202)
Q303	0TR102009AF	KRC102M TP,KEC(KRC1202)
Q304	0TR102009AF	KRC102M TP,KEC(KRC1202)
Q305	0TR126609AA	KTA1266-TP-Y (KTA1015)
Q351	0TR130209AA	KTD1302 MUTING TP,KEC

REF. NO.	PART NO.	DESCRIPTION
Q501	0TR126609AB	KTA1266-GR TP,(KTA1015GR)
Q502	0TR103009AE	KRC103M TP,KEC(KRC1203)
Q601	0TR319809AB	KTC3198-TP-GR (KTC1815)
Q602	0TR319809AB	KTC3198-TP-GR (KTC1815)
Q901	0TR201200AB	KTD2058-Y PWR KEC
Q902	0TR201200AB	KTD2058-Y PWR KEC
Q903	0TR201200AB	KTD2058-Y PWR KEC
Q904	0TR201200AB	KTD2058-Y PWR KEC
Q905	0TR320509AA	KTC3205-TP-O (KTC2236A)
Q906	0TR102009AE	KRA102M TP,KEC(KRA2202)
Q907	0TR103009AE	KRC103M TP,KEC(KRC1203)
RM601	0IRH676000A	RPM-676CBR-L SENSOR RMC

RESISTOR

R10	0RD2200F608	220	1/6W	5	TA26
R101	0RD1001F608	1.0K	1/6W	5	TA26
R102	0RD1001F608	1.0K	1/6W	5	TA26
R103	0RD1803F608	180K	1/6W	5	TA26
R104	0RD1500F608	150	1/6W	5	TA26
R105	0RD4701F608	4.7K	1/6W	5	TA26
R106	0RD6801F608	6.8K	1/6W	5	TA26
R107	0RD1503F608	150K	1/6W	5	TA26
R108	0RD1801F608	1.8K	1/6W	5	TA26
R109	0RD4702F608	47K	1/6W	5	TA26
R11	0RD1001F608	1.0K	1/6W	5	TA26
R110	0RD1001F608	1.0K	1/6W	5	TA26
R111	0RD1003F608	100K	1/6W	5	TA26
R112	0RD6802F608	68K	1/6W	5	TA26
R113	0RD1801F608	1.8K	1/6W	5	TA26
R114	0RD1500F608	150	1/6W	5	TA26
R115	0RD3303F608	330K	1/6W	5	TA26
R116	0RD1503F608	150K	1/6W	5	TA26
R117	0RD1502F608	15K	1/6W	5	TA26
R118	0RD3902F608	39K	1/6W	5	TA26
R119	0RD5601F608	5.6K	1/6W	5	TA26
R120	0RD1004F608	1.0M	1/6W	5	TA26
R121	0RD1002F608	10K	1/6W	5	TA26
R122	0RD2202F608	22K	1/6W	5	TA26
R123	0RD1000F608	100	1/6W	5	TA26
R124	0RD1002F608	10K	1/6W	5	TA26
R125	0RD1002F608	10K	1/6W	5	TA26
R126	0RD1002F608	10K	1/6W	5	TA26
R127	0RD4702F608	47K	1/6W	5	TA26
R128	0RD1002F608	10K	1/6W	5	TA26
R129	0RD1003F608	100K	1/6W	5	TA26
R13	0RD2201F608	2.2K	1/6W	5	TA26
R130	0RD1503F608	150K	1/6W	5	TA26
R131	0RD0562F608	56	1/6W	5	TA26
R132	0RD3301F608	3.3K	1/6W	5	TA26
R133	0RD2700F608	270	1/6W	5	TA26
R134	0RD3300F608	330	1/6W	5	TA26
R135	0RD1502F608	15K	1/6W	5	TA26
R136	0RD0102F608	10	1/6W	5	TA26
R14	0RD2201F608	2.2K	1/6W	5	TA26
R15	0RD3301F608	3.3K	1/6W	5	TA26
R151	0RD1001F608	1.0K	1/6W	5	TA26
R152	0RD1001F608	1.0K	1/6W	5	TA26
R153	0RD1803F608	180K	1/6W	5	TA26
R154	0RD1500F608	150	1/6W	5	TA26
R155	0RD4701F608	4.7K	1/6W	5	TA26
R156	0RD6801F608	6.8K	1/6W	5	TA26
R157	0RD1503F608	150K	1/6W	5	TA26
R158	0RD1801F608	1.8K	1/6W	5	TA26

R159	0RD4702F608	47K	1/6W	5	TA26
R16	0RD3301F608	3.3K	1/6W	5	TA26
R160	0RD1001F608	1.0K	1/6W	5	TA26
R161	0RD1003F608	100K	1/6W	5	TA26
R162	0RD6802F608	68K	1/6W	5	TA26
R163	0RD1801F608	1.8K	1/6W	5	TA26
R164	0RD1500F608	150	1/6W	5	TA26
R165	0RD3303F608	330K	1/6W	5	TA26
R166	0RD1503F608	150K	1/6W	5	TA26
R167	0RD1502F608	15K	1/6W	5	TA26
R168	0RD3902F608	39K	1/6W	5	TA26
R169	0RD5601F608	5.6K	1/6W	5	TA26
R201	0RD6801F608	6.8K	1/6W	5	TA26
R202	0RD5600F608	560	1/6W	5	TA26
R203	0RD5600F608	560	1/6W	5	TA26
R204	0RD3301F608	3.3K	1/6W	5	TA26
R205	0RD2200F608	220	1/6W	5	TA26
R211	0RD1000F608	100	1/6W	5	TA26
R212	0RD2202F608	22K	1/6W	5	TA26
R213	0RD1001F608	1.0K	1/6W	5	TA26
R214	0RD2202F608	22K	1/6W	5	TA26
R215	0RD5601F608	5.6K	1/6W	5	TA26
R216	0RD1002F608	10K	1/6W	5	TA26
R217	0RD1001F608	1.0K	1/6W	5	TA26
R218	0RD3302F608	33K	1/6W	5	TA26
R219	0RD4702F608	47K	1/6W	5	TA26
R220	0RD1003F608	100K	1/6W	5	TA26
R221	0RD2201F608	2.2K	1/6W	5	TA26
R222	0RD2201F608	2.2K	1/6W	5	TA26
R223	0RD2200F608	220	1/6W	5	TA26
R224	0RD2200F608	220	1/6W	5	TA26
R225	0RD1002F608	10K	1/6W	5	TA26
R226	0RD1002F608	10K	1/6W	5	TA26
R230	0RD6803F608	680K	1/6W	5	TA26
R231	0RD4701F608	4.7K	1/6W	5	TA26
R232	0RD4701F608	4.7K	1/6W	5	TA26
R233	0RD1001F608	1.0K	1/6W	5	TA26
R251	0RD6801F608	6.8K	1/6W	5	TA26
R252	0RD5600F608	560	1/6W	5	TA26
R253	0RD5600F608	560	1/6W	5	TA26
R254	0RD3301F608	3.3K	1/6W	5	TA26
R280	0RD6803F608	680K	1/6W	5	TA26
R281	0RD4701F608	4.7K	1/6W	5	TA26
R282	0RD4701F608	4.7K	1/6W	5	TA26
R283	0RD1001F608	1.0K	1/6W	5	TA26
R3	0RD0392F608	39	1/6W	5	TA26
R301	0RD3301F608	3.3K	1/6W	5	TA26
R302	0RD1800F608	180	1/6W	5	TA26
R303	0RD2200F608	220	1/6W	5	TA26

REF. NO.	PART NO.	DESCRIPTION				
R304	0RD2201F608	2.2K	1/6W	5	TA26	
R305	0RD4701F608	4.7K	1/6W	5	TA26	
R306	0RD1003F608	100K	1/6W	5	TA26	
R307	0RD4702F608	47K	1/6W	5	TA26	
R308	0RD2202F608	22K	1/6W	5	TA26	
R311	0RD1002F608	10K	1/6W	5	TA26	
R312	0RD8202F608	82K	1/6W	5	TA26	
R314	0RD0102F608	10	1/6W	5	TA26	
R351	0RD3301F608	3.3K	1/6W	5	TA26	
R352	0RD1800F608	180	1/6W	5	TA26	
R353	0RD2200F608	220	1/6W	5	TA26	
R362	0RD8202F608	82K	1/6W	5	TA26	
R364	0RD0102F608	10	1/6W	5	TA26	
R4	0RD1003F608	100K	1/6W	5	TA26	
R5	0RD1000F608	100	1/6W	5	TA26	
R501	0RD1001F608	1.0K	1/6W	5	TA26	
R502	0RD1002F608	10K	1/6W	5	TA26	
R503	0RD1002F608	10K	1/6W	5	TA26	
R504	0RD1001F608	1.0K	1/6W	5	TA26	
R505	0RD2202F608	22K	1/6W	5	TA26	
R506	0RD1001F608	1.0K	1/6W	5	TA26	
R507	0RD1503F608	150K	1/6W	5	TA26	
R508	0RD1003F608	100K	1/6W	5	TA26	
R509	0RD1202F608	12K	1/6W	5	TA26	
R510	0RD1003F608	100K	1/6W	5	TA26	
R511	0RD4702F608	47K	1/6W	5	TA26	
R512	0RD4702F608	47K	1/6W	5	TA26	
R513	0RD1002F608	10K	1/6W	5	TA26	
R514	0RD1003F608	100K	1/6W	5	TA26	
R515	0RD1803F608	180K	1/6W	5	TA26	
R516	0RD4702F608	47K	1/6W	5	TA26	
R517	0RD1003F608	100K	1/6W	5	TA26	
R518	0RD1002F608	10K	1/6W	5	TA26	
R519	0RD1001F608	1.0K	1/6W	5	TA26	
R520	0RD1202F608	12K	1/6W	5	TA26	
R521	0RD8201F608	8.2K	1/6W	5	TA26	
R522	0RD1004F608	1.0M	1/6W	5	TA26	
R523	0RD2203F608	220K	1/6W	5	TA26	
R524	0RD1003F608	100K	1/6W	5	TA26	
R525	0RD4703F608	470K	1/6W	5	TA26	
R526	0RD0222F608	22	1/6W	5	TA26	
R527	0RD0822F608	82	1/6W	5	TA26	
R528	0RD4701F608	4.7K	1/6W	5	TA26	
R529	0RD1001F608	1.0K	1/6W	5	TA26	
R530	0RD1001F608	1.0K	1/6W	5	TA26	
R531	0RD4701F608	4.7K	1/6W	5	TA26	
R532	0RD1202F608	12K	1/6W	5	TA26	
R533	0RD1004F608	1.0M	1/6W	5	TA26	
R534	0RD2702F608	27K	1/6W	5	TA26	
R535	0RD2702F608	27K	1/6W	5	TA26	
R536	0RD2702F608	27K	1/6W	5	TA26	
R537	0RD2702F608	27K	1/6W	5	TA26	
R538	0RD1004F608	1.0M	1/6W	5	TA26	
R539	0RD1202F608	12K	1/6W	5	TA26	
R541	0RD4701F608	4.7K	1/6W	5	TA26	

REF. NO.	PART NO.	DESCRIPTION				
R542	0RD1001F608	1.0K	1/6W	5	TA26	
R543	0RD4701F608	4.7K	1/6W	5	TA26	
R544	0RD3301F608	3.3K	1/6W	5	TA26	
R545	0RD3301F608	3.3K	1/6W	5	TA26	
R546	0RD2702F608	27K	1/6W	5	TA26	
R547	0RD0222F608	22	1/6W	5	TA26	
R548	0RD0222F608	22	1/6W	5	TA26	
R549	0RD1004F608	1.0M	1/6W	5	TA26	
R550	0RD1001F608	1.0K	1/6W	5	TA26	
R551	0RD1002F608	10K	1/6W	5	TA26	
R552	0RD1001F608	1.0K	1/6W	5	TA26	
R553	0RD1001F608	1.0K	1/6W	5	TA26	
R554	0RD1001F608	1.0K	1/6W	5	TA26	
R560	0RD2202F608	22K	1/6W	5	TA26	
R562	0RD1002F608	10K	1/6W	5	TA26	
R563	0RD1002F608	10K	1/6W	5	TA26	
R564	0RD1002F608	10K	1/6W	5	TA26	
R565	0RD1002F608	10K	1/6W	5	TA26	
R566	0RD5601F608	5.6K	1/6W	5	TA26	
R567	0RD8201F608	8.2K	1/6W	5	TA26	
R571	0RD1003F608	100K	1/6W	5	TA26	
R572	0RD1003F608	100K	1/6W	5	TA26	
R575	0RD4701F608	4.7K	1/6W	5	TA26	
R576	0RD4701F608	4.7K	1/6W	5	TA26	
R577	0RD5601F608	5.6K	1/6W	5	TA26	
R596	0RD2700F608	270	1/6W	5	TA26	
R6	0RD0331F608	3.3	1/6W	5	TA26	
R601	0RD1003F608	100K	1/6W	5	TA26	
R602	0RD1002F608	10K	1/6W	5	TA26	
R603	0RD4701F608	4.7K	1/6W	5	TA26	
R604	0RD2202F608	22K	1/6W	5	TA26	
R605	0RD2201F608	2.2K	1/6W	5	TA26	
R606	0RD1004F608	1.0M	1/6W	5	TA26	
R607	0RD6802F608	68K	1/6W	5	TA26	
R608	0RD8201F608	8.2K	1/6W	5	TA26	
R610	0RD1000F608	100	1/6W	5	TA26	
R611	0RD1000F608	100	1/6W	5	TA26	
R612	0RD2701F608	2.7K	1/6W	5	TA26	
R613	0RD8200F608	820	1/6W	5	TA26	
R7	0RD1003F608	100K	1/6W	5	TA26	
R8	0RD2202F608	22K	1/6W	5	TA26	
R9	0RD3301F608	3.3K	1/6W	5	TA26	
R901	614-016B	R,FUSE	FRN1/4	5%	4.7OHM	
R902	0RD3300F608	330	1/6W	5	TA26	
R903	0RD1000F608	100	1/6W	5	TA26	
R904	614-016B	R,FUSE	FRN1/4	5%	4.7OHM	
R905	0RD5600F608	560	1/6W	5	TA26	
R906	0RD1000F608	100	1/6W	5	TA26	
R907	614-016C	R,FUSING	2.20HM-J		FRN1/4	
R908	0RD5600F608	560	1/6W	5	TA26	
R909	0RD1000F608	100	1/6W	5	TA26	
R910	0RD5602F608	56K	1/6W	5	TA26	
R912	0RD5600F608	560	1/6W	5	TA26	
R913	0RD5600F608	560	1/6W	5	TA26	
R914	0RD0222F608	22	1/6W	5	TA26	

SWITCH

SW101	552-606F	SSCJ206S0013
SW102	552-628B	JSS 2324 2P3P JEIL
SW11	558T908A	TACT SKHV10908A H=4.3
SW12	558T908A	TACT SKHV10908A H=4.3
SW201	556-621C	SOD2706-01-021 8C-4P
SW4	554-634J	JPS 2259S 2C2P SHORT S-LOCK
SW601	558T908A	TACT SKHV10908A H=4.3
SW602	558T908A	TACT SKHV10908A H=4.3
SW603	558T908A	TACT SKHV10908A H=4.3
SW604	558T908A	TACT SKHV10908A H=4.3
SW605	558T908A	TACT SKHV10908A H=4.3

REF. NO.	PART NO.	DESCRIPTION

ZENER DIODE

ZD201	0DZ620009EA	MTZ6.2-B T-77
ZD301	0DZ220009FF	MTZ22D-T-77
ZD4	0DZ330009AG	MTZ3.3B-T-77
ZD501	0DZ390009BC	MTZ3.9B-T-77
ZD901	0DZ820009CC	MTZ8.2C-T-77
ZD902	0DZ910009EE	MTZ9.1C-T-77
ZD903	0DZ120009IA	MTZ12-C T-77
ZD904	0DZ680009CC	MTZ6.8C-T-77
ZD905	0DZ560009FA	MTZ5.6-B T-77

MISCELLANEOUS

F903	0FT3151B513	3.15A 250V 5.2X20 ⚠
F903	586-001C	PIN-T 5X20 KS
T101	634-023B	OSC TAPE 10,(=634-023A)
T901	6170S-013ZH	115/230V 50/60HZ 57X28
VC1	622-009S	L2Z-22BGLT(FOR 2 BAND)
VC1	622-014S	L2Z-22BPF (FOR 3 BAND)
VR101	612-634I	RS15V123DIDB-100KBX2
VR102	612-634I	RS15V123DIDB-100KBX2
VR103	612-634I	RS15V123DIDB-100KBX2
VR104	0RV1471D230	470 6 ST P3 L2.5 5
VR501	0RV1223D230	22K 6 ST P3 L2.5 5
VR502	0RV1223D230	22K 6 ST P3 L2.5 5
VR503	0RV1223D230	22K 6 ST P3 L2.5 5
VR504	0RV1223D230	22K 6 ST P3 L2.5 5
X1	616-020K	RESONATOR,C CSB456F16
X501	616-020X	CSA16.93MX040,MURATA
X601	616-020M	CSA4.00MG MURATA

3874S-2039A	OPERATION MANUAL(FOR GS STANDARD)
3874S-2040D	OPERATION MANUAL(FOR CIS)
3890S-G044F	GIFT BOX(FOR LGEUK)
3890S-G044L	GIFT BOX(FOR LGEMT)
3890S-G044M	GIFT BOX(FOR LGECI;CD-565)
3890S-G044P	GIFT BOX(FOR LGECI;CD-560)
3890S-G044O	GIFT BOX(FOR LGEFS)
3890S-G044Q	GIFT BOX(FOR LGEDG)
3890S-G044Q	GIFT BOX(FOR LGEDG)
3890S-G031K	GIFT BOX(FOR CIS)

※ For manual and gift box part numbers about unspecified buyers, please refer to service part price list supplied individually.