GoldStar

MICRO STEREO MUSIC SYSTEM
SERVICE MANUAL

CONTENTS

1. SPECIFICATIONS 3
2. ADJUSTMENTS 4
3. CIRCUIT DESCRIPTIONS 9
4. MAJOR WAVEFORM 22
5. TROUBLESHOOTING GUIDE 25
6. PCB LAYOUT 31
7. BLOCK DIAGRAM 39
8. SCHEMATIC DIAGRAM 41
9. WIRING DIAGRAM 47
10. EXPLODED VIEW & PARTS LIST 49
11. REPLACEMENT PARTS LIST 59

MODEL : FFH-150A/S/L

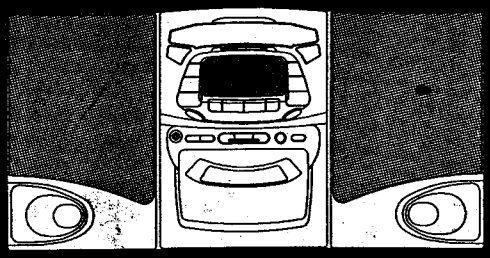

1. SPECIFICATIONS

1. GENERAL SECTION

(1) Power Supplies ..... AC : Refer to the indicated voltage on the back of unit.
(2) Dimensions ..... 500 x 253 x 245mm (W x H x D)
(3) Speaker ..... 8Ω x 2EA
(4) Output Power ..... 7.5W x 2 (10% T.H.D)
(5) Weight 5.9kg

2. RADIO SECTION

	[AM(MW)]	[FM]	[LW]	[SW]
(1) Frequency Range	522~1,620kHz or 520~1,710kHz	87.5~108MHz	144~288kHz	5.9~18MHz
(2) Usable Sensitivity	55dB	18dB	65dB	40dB
(3) Signal to Noise Ratio	35dB	50dB	25dB	35dB
(4) Image Rejection Ratio	30dB	30dB	25dB	6dB
(5) I.F. Rejection Ratio	40dB	50dB	30dB	-
(6) T.H.D.	3.5%	1%	-	-

3. CASSETTE PLAYER SECTION

(1) Wow & Flutter 0.1% (3kHz)
(2) Frequency Response (125Hz/1kHz/8kHz) ..... ±3dB/0dB/±3dB
(3) Signal to Noise Ratio (P.B./R.P.) 45dB/40dB
(4) Channel Separation ..... 38dB(1kHz)
(5) T.H.D. (P.B./R.P.) 1%/2%

4. COMPACT DISC PLAYER SECTION

(1) Frequency Response ..... ±3dB
(2) Signal to Noise Ratio 65dB
(3) T.H.D. 0.7%
(4) Channel Separation 40dB
(5) Access Time ..... 3~6sec

NOTE: Design and specifications are subject to change without notice for improvement.

2. ADJUSTMENTS

This set has been aligned at the factory and normally will not require further adjustment. As a result, it is not recommended that any attempt is made to modificate any circuit. If any parts are replaced or if anyone tampers with the adjustment, realignment may be necessary.

1. ADJUSTMENT POINTS

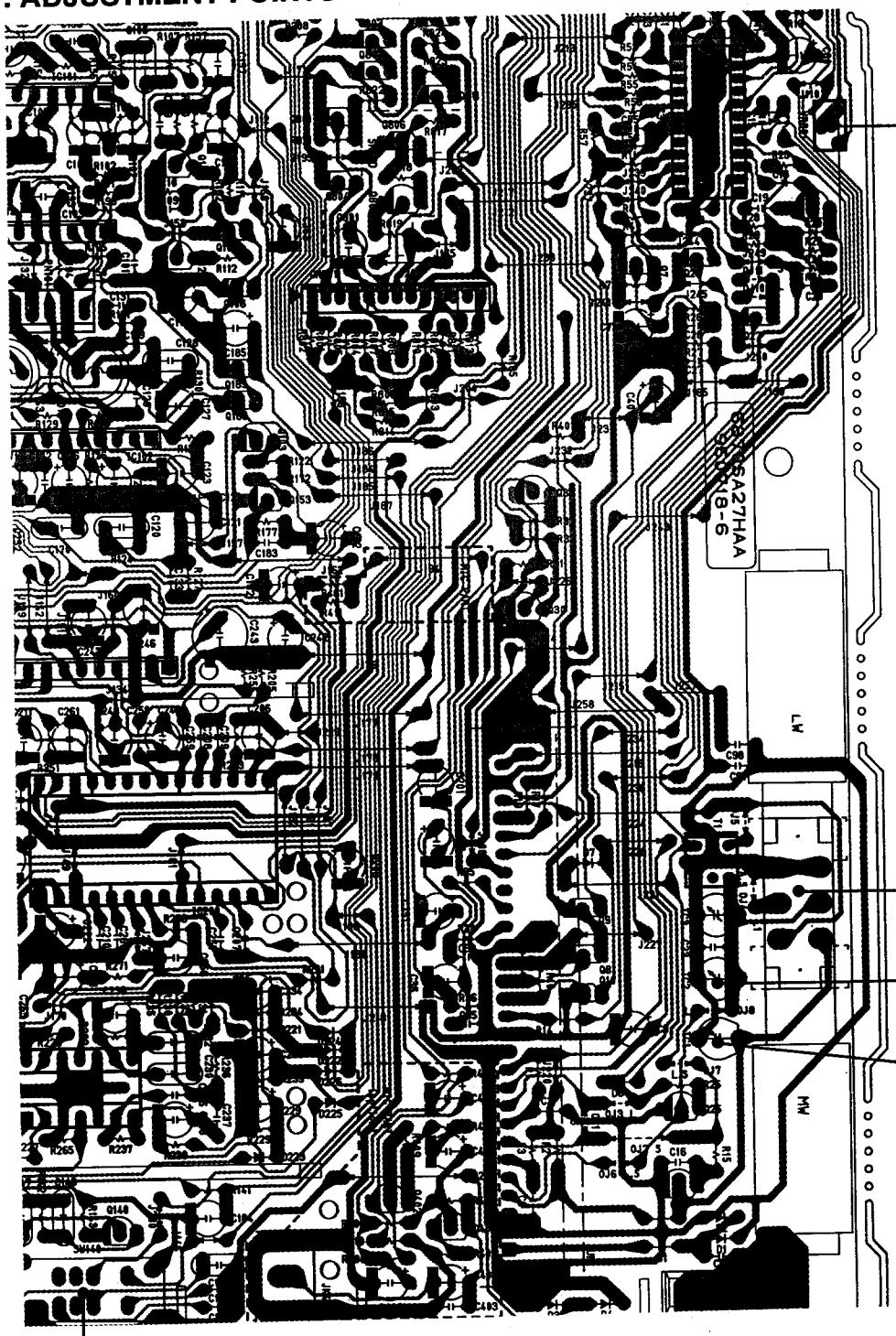

2. RADIO SECTION

(1) AM(MW) RF ADJUSTMENT

Signal Generator:
Connects to the AM(MW) antenna coil(L1) through the loop antenna.
Adjust for maximum indication on the SSVM or for maximum waveform on the scope.

Step	Dial Pointer Position	SG Output (kHz)	Adjustment
1	603 kHz	603	L1 (AM(MW))
2	1,404 kHz	1,404	TC1
3	Repeat Steps 1 and 2 several times.		

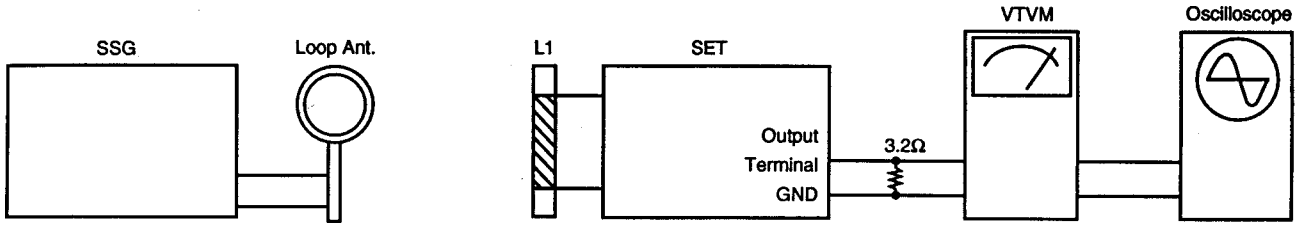

(2) LW RF ADJUSTMENT

Signal Generator:
Connects to the LW antenna coil(L1) through the loop antenna.
Adjust for maximum indication on the SSVM or for maximum waveform on the scope

Step	Dial Pointer Position	SG Output (kHz)	Adjustment
1	160 kHz	160	L1 (LW)
2	260 kHz	260	TC2
3	Repeat Steps 1 and 2 several times.		

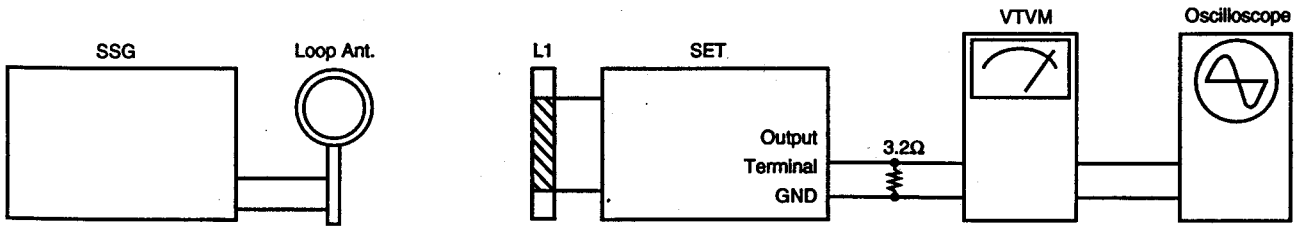

3. DECK MECHANISM SECTION

(1) AZIMUTH ADJUSTMENT

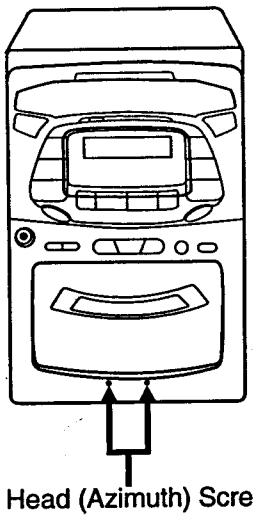

Test Tape	Adjust for	Adjustment
MTT-114 (10 kHz)	L/R Maximum	Head(Azimuth) Screw

(2) RECORDING BIAS FREQUENCY ADJUSTMENT

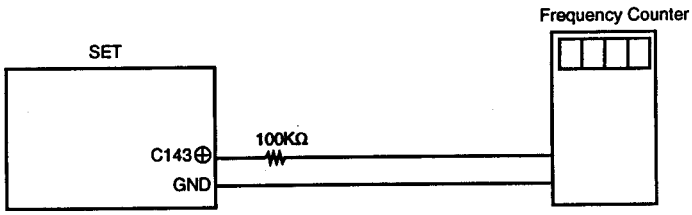

Input	Adjust for	Adjustment	RIF S/W Position
No Signal	80kHz (±1%)	L140	SW140 "Center"

(3) TAPE SPEED ADJUSTMENT

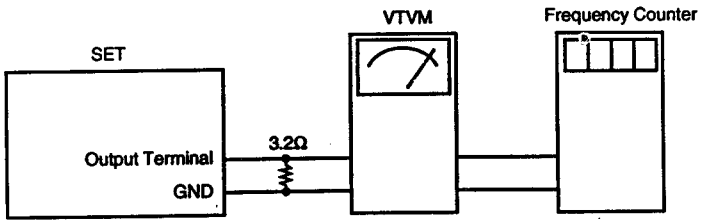

Test Tape	Deck Mode	Adjust for	Adjustment
MTT-111	Playback	3kHz (±3%)	VR801

4. CD SECTION

(1) TEST & ADJUSTMENT POINTS

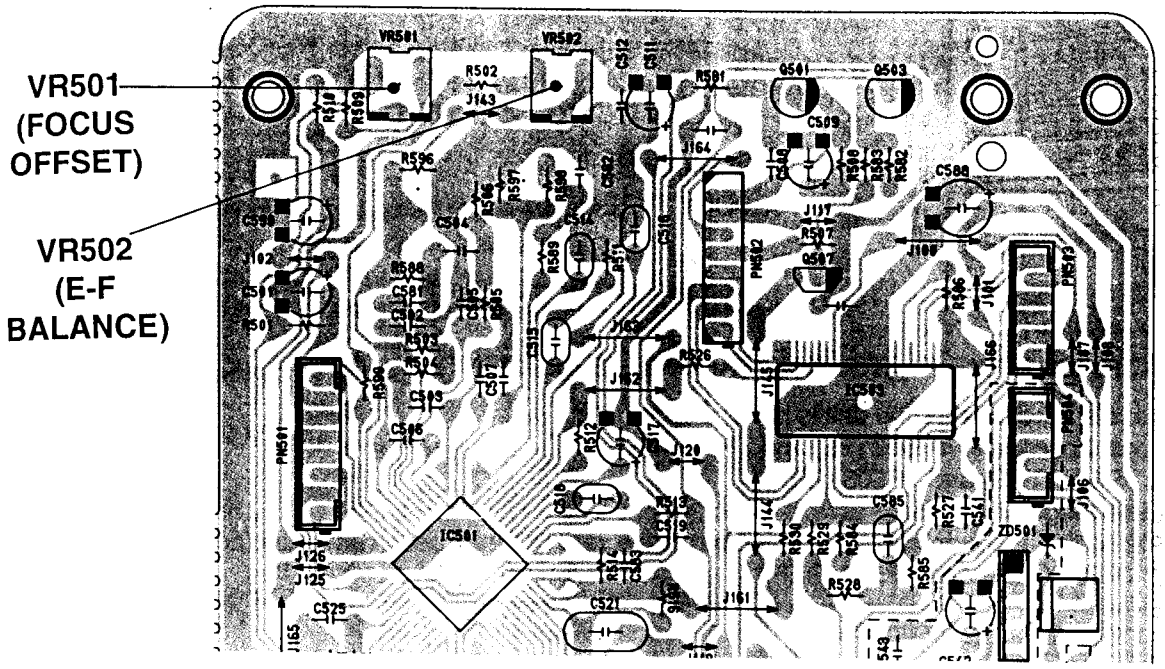

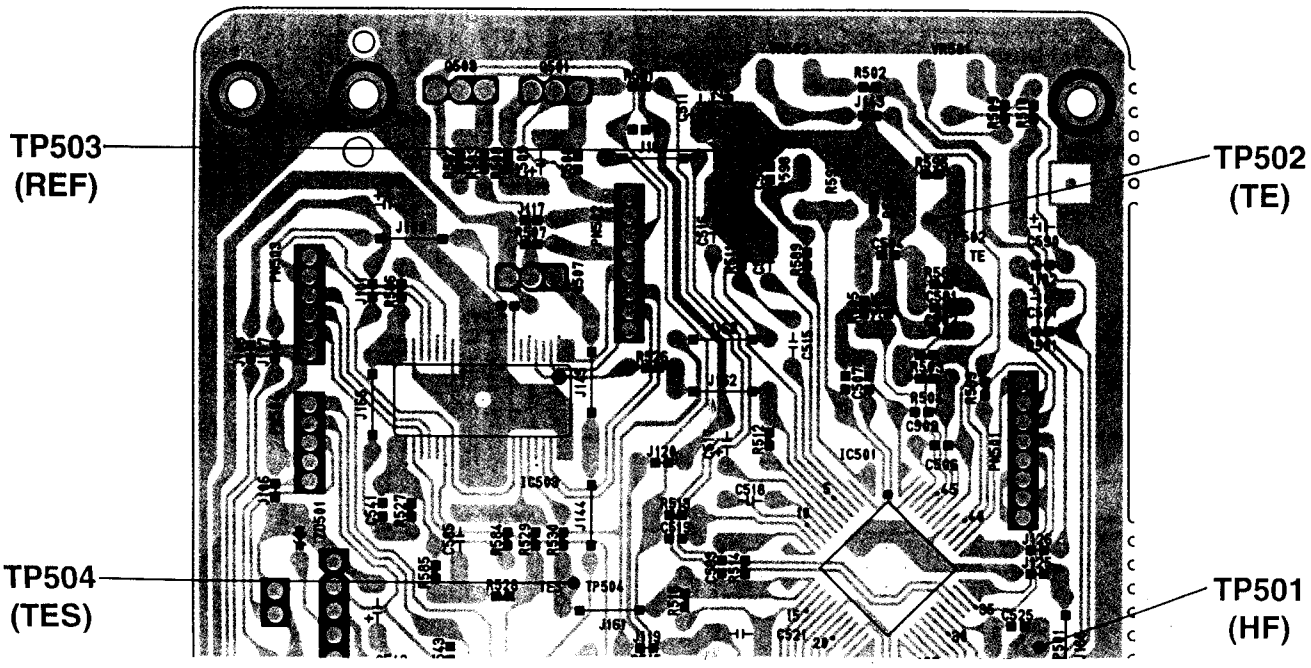

(2) EQUIPMENT REQUIRED

1) Oscilloscope

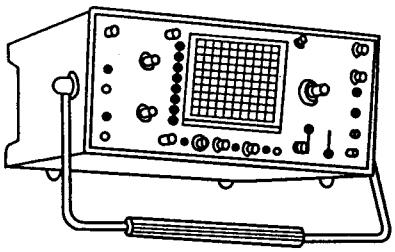

2) Test disc

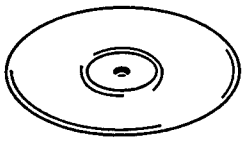

※ SONY TYPE4: YEDS-18
YEDS-43
(or General Compact Disc)

3) 10:1 Oscilloscope probe

(3) E.F BALANCE ADJUSTMENT (TRACKING BALANCE ADJUSTMENT)

1. Insert the test disc and be sure the unit is in stop mode.
2. Connect the oscilloscope to TP502 (TE) and TP503 (REF).
3. Short circuit TP504 (TES) and TP503 (REF).
4. Play the middle range of the disc.
5. Adjust VR502 so that the amplitude above and below the zero DC level becomes equal (amplitude A=B)
6. Open circuit TP504 (TES) and TP503 (REF).

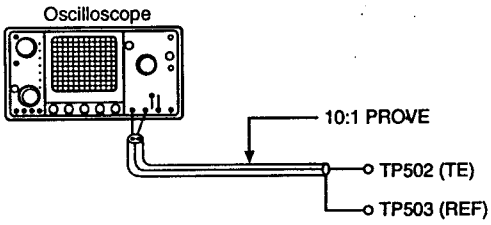

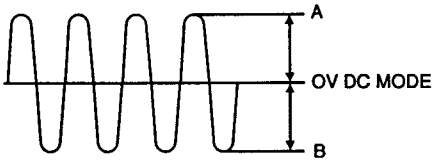

(4) FOCUS OFFSET ADJUSTMENT

1. Insert the disc and press the PLAY/PAUSE button.
2. Connect the oscilloscope to TP501 (HF) and TP503 (REF).
3. Adjust the focus offset volume (VR501) so that the eye-pattern is clear and the waveform (Vp-p) is maximum.
4. When confirming eye-pattern, you have to use 10:1 probe.

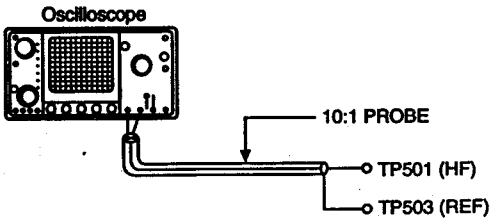

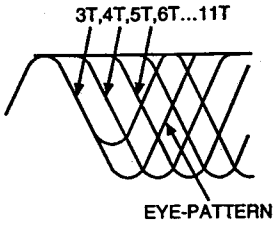

EYE-PATTERN

3. CIRCUIT DESCRIPTIONS

1. IC 501 CXA 1782BQ
RF Signal Processing Servo Amplifier for CD players

(1) DESCRIPTION

The CXA1782BQ/BR is a bipolar IC with built-in RF signal processing and various servo ICs. A CD player servo can be configured by using this IC, DSP and driver.

CXA1782BQ
48 pin QFP (Plastic)

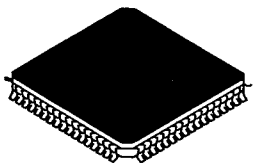

(2) FEATURES

- Low operating voltage (Vcc=3.0 to 6.0V)
- Low power consumption (39mW, Vcc=3.0V)
- Supports pick up of either current output, voltage output.
- Automatic adjustment comparator for tracking balance and gain.
- Single power supply operation.

(3) BLOCK DIAGRAM

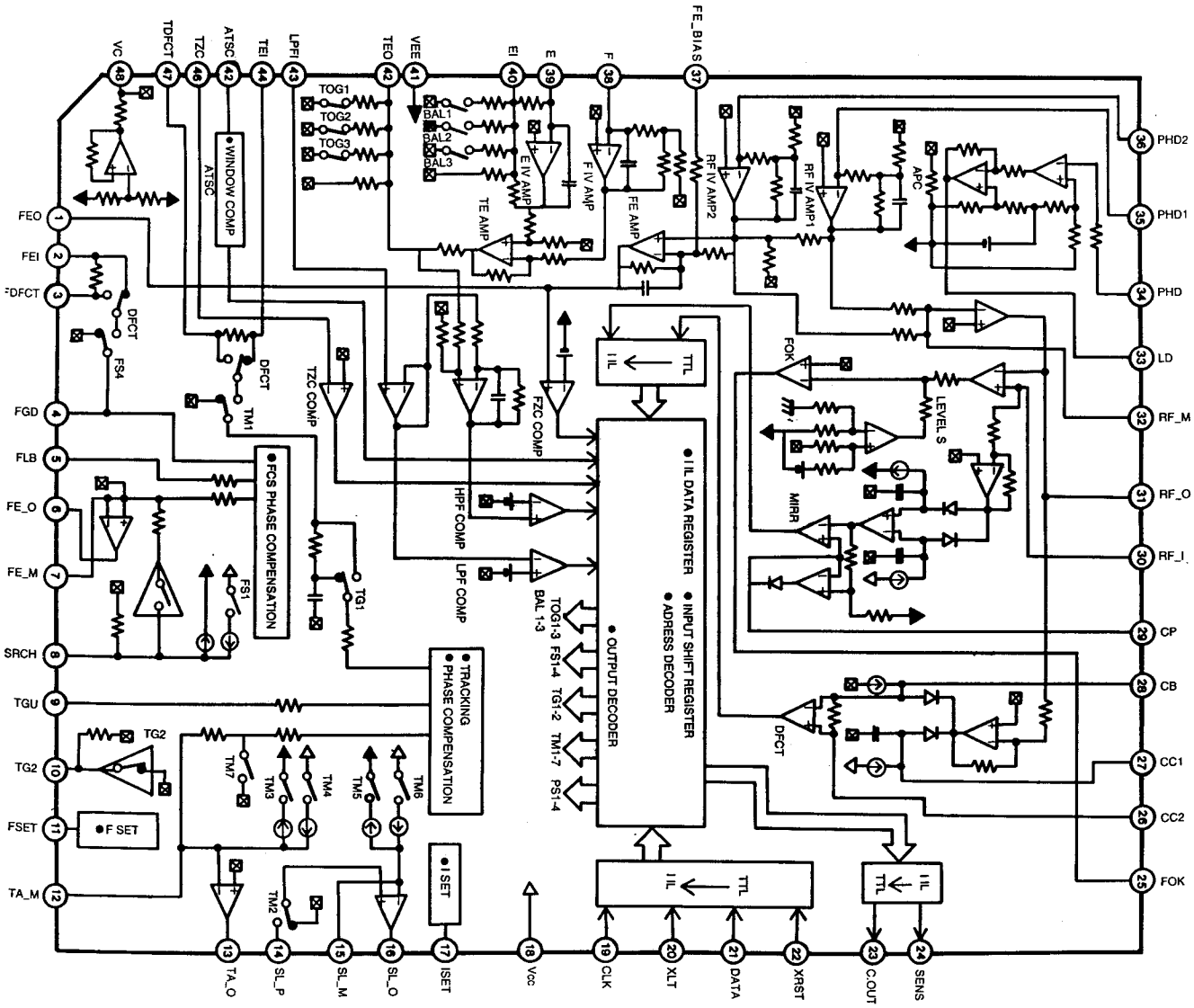

(4) PIN DESCRIPTION

Pin No.	Symbol	I/O	Description
1	FEO	I	Focus error amplifier output. Connected internally to the FZC comparator input.
2	FEI	I	Focus error input.
3	FDFCT	I	Capacitor connection pin for defect time constant.
4	FGD	I	Ground this pin through a capacitor when decreasing the focus servo high-frequency gain.
5	FLB	I	External time constant setting pin for increasing the focus servo low frequency.
6	FE_O	O	Focus drive output.
7	FE_M	I	Focus amplifier negative input pin.
8	SRCH	I	External time constant setting pin for generating focus servo waveform.
9	TGU	I	External time constant setting pin for switching tracking high-frequency gain.
10	TG2	I	External time constant setting pin for switching tracking high-frequency gain.
11	FSET	I	High cut off frequency setting pin for focus and tracking phase compensation amplifier.
12	TA_M	I	Tracking amplifier negative input pin.
13	TA_O	O	Tracking drive output.
14	SL_P	I	Sled amplifier non-inversed input.
15	SL_M	I	Sled amplifier negative input pin.
16	SL_O	O	Sled drive output.
17	ISET	I	Setting pin for Focus search, Track jump, and Sled kick current.
19	CLK	I	Serial data transfer clock input from MICOM.
20	XLT	I	Latch input from MICOM.
21	DATA	I	Serial data input from MICOM.
22	XRST	I	Reset input; resets at Low.
23	C. OUT	O	Track number count signal output.
24	SENS	O	Outputs FZC, DFCT, TZC, gain, balance, and others according to the command from MICOM.
25	FOK	O	Focus OK comparator output.
26	CC2	O	Input pin for the DEFECT bottom hold output capacitance-coupled.
27	CC1	I	DEFECT bottom hold output.

Pin No.	Symbol	I/O	Description
28	CB	I	Connection pin for DEFECT bottom hold capacitor.
29	CP	I	Connection pin for MIRR hold capacitor. MIRR comparator non-inversed input.
30	RF_I	I	Input pin for the RF summing amplifier output capacitance-coupled.
31	RF_O	O	RF summing amplifier output. Eye pattern check point.
32	RF_M	I	RF summing amplifier inversed input. The RF amplifier gain is determined by the resistance connected between this pin and RFO pin.
33	LD	O	APC amplifier output.
34	PHD	I	APC amplifier input.
35	PHD1	I	RF I-V amplifier inversed input.
36	PHD2	I	Connect these pins to the photo diode A+C and B+D pins.
37	FE_BIAS	I	Bias adjustment of focus error amplifier.
38	F	I	F I-V and E I-V amplifier inversed input.
39	E	I	Connect these pins to photo diodes F and E.
40	EI	-	I-V amplifier E gain adjustment.
42	TEO	O	Tracking error amplifier output. E-F signal is output is input.
43	LPFI	I	Comparator input for balance adjustment.
44	TEI	I	Tracking error input.
45	ATSC	I	Window comparator input for ATSC detection.
46	TZC	I	Tracking zero-cross comparator input.
47	TDFCT	I	Capacitor connection pin for defect time constant.
48	VC	O	$(V_{CC}+V_{EE})/2$ DC voltage output.

(5) DESCRIPTION OF FUNCTIONS

A. RF AMPLIFIER

The photo diode currents input to the input pins (PD1 and PD2) are each I-V converted across a 58kΩ equivalent resistor at the PD IV amplifiers. The current is added at the RF summing amplifier, and the photo diode (A+B+C+D) current-voltage converted output voltage is output to the RFO pin. An eye-pattern check can be performed at this pin.

The low frequency component of the RFO output voltage is (V_{RFO}=3.0 x (VA+VB))=174kΩ x (iPD1+iPD2)).

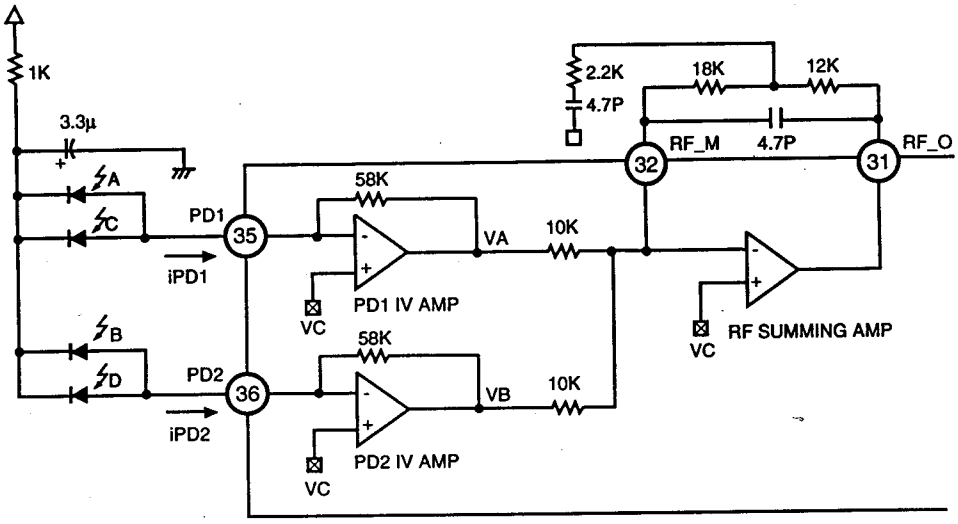

B. FOCUS ERROR AMPLIFIER

The focus error amplifier calculates the difference between output VA and VB of the RF I-V amplifier, and outputs current-voltage converted voltage of the photo diode (A+C-B-D).

The FE output voltage (low frequency) is V_{FE}=5.4 x (V_A-V_B)=((iPD2-iPD1) x 315kΩ.

Be aware that the rotation of the focus bias volume has reversed for the usual CD RF IC.

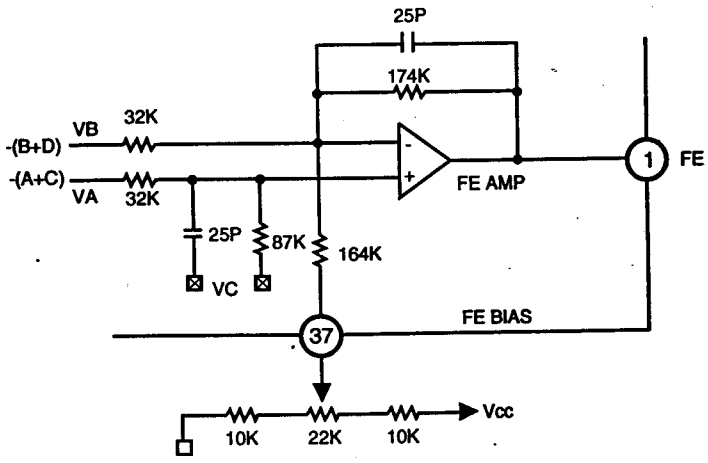

C. CENTER VOLTAGE GENERATION CIRCUIT

Maximum current is approximately ±3mA. Output impedance is approximately 50Ω.

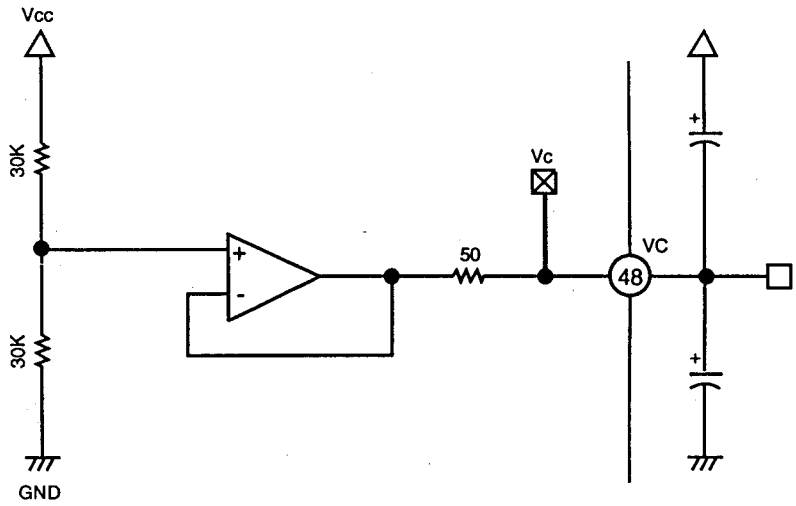

D. APC CIRCUIT

When driving a constant current, the optical output by the laser diode possesses large negative temperature characteristics. Therefore, the current must be controlled with the monitor photo diode to ensure the output remains constant.

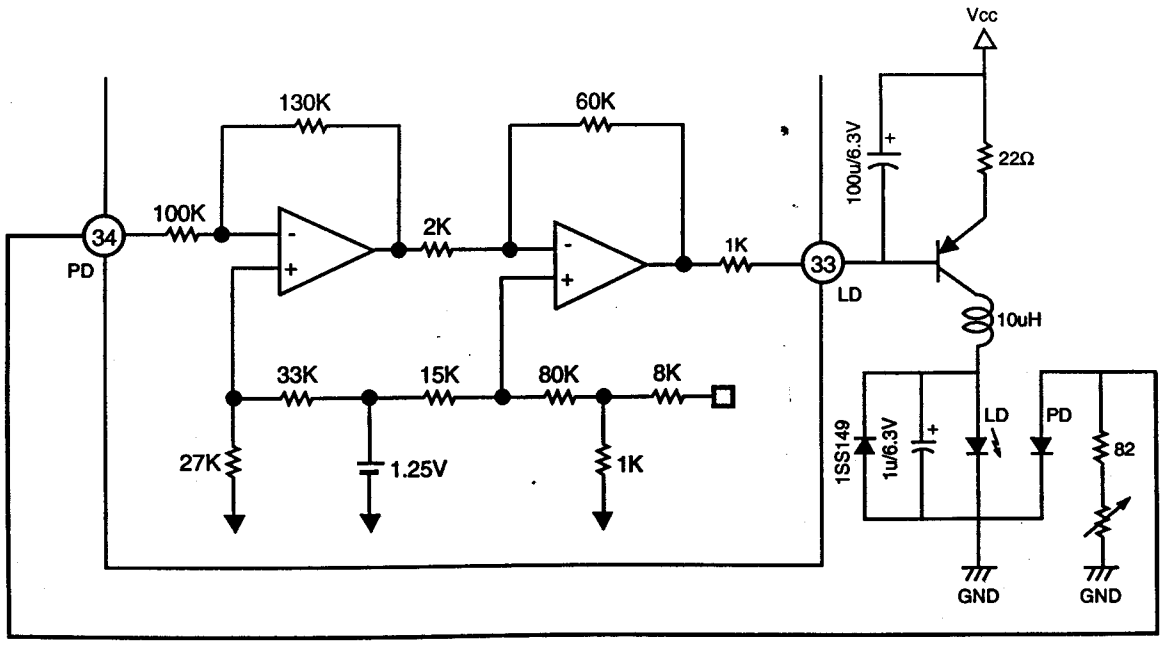

E. FOCUS SERVO

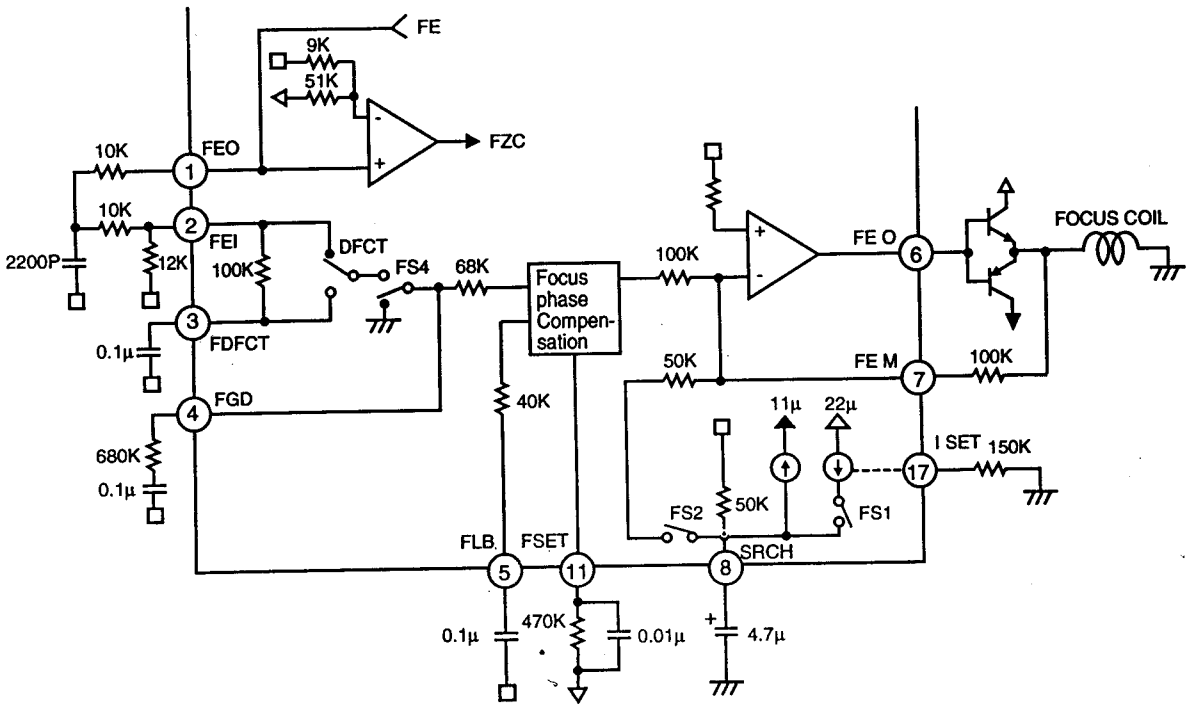

The above figure shows a block diagram of the focus servo.
Ordinarily the FE signal is input to the focus phase compensation circuit through a 68kΩ resistance, however, when DFCT is detected, the FE signal is switched to pass through a low pass filter formed by the internal 100kΩ resistance and the capacitance connected to Pin 3. When this DFCT prevention circuit is not used, leave pin 3 open. An additional note, defect switch operation can be enabled and disabled with command.
The capacitor connected between Pin 5 and GND is a time constant to raise the low frequency in the normal playback state.
The peak frequency of the focus phase compensation is approximately 1kHz when a resistance of 470kΩ is connected to Pin 11.
The focus search height is approximately 1.1 Vp-p when using the constants indicated in the above figure. This height is inversely proportional to the resistance connected between Pin 17 and GND. However, changing this resistance also changes the height of the track jump and sled kick as well.
The FZC comparator inversed input is set to 15% of Vcc and VC (Pin 48), (Vcc-VC) x 15%.

F. TRACKING SLED SERVO

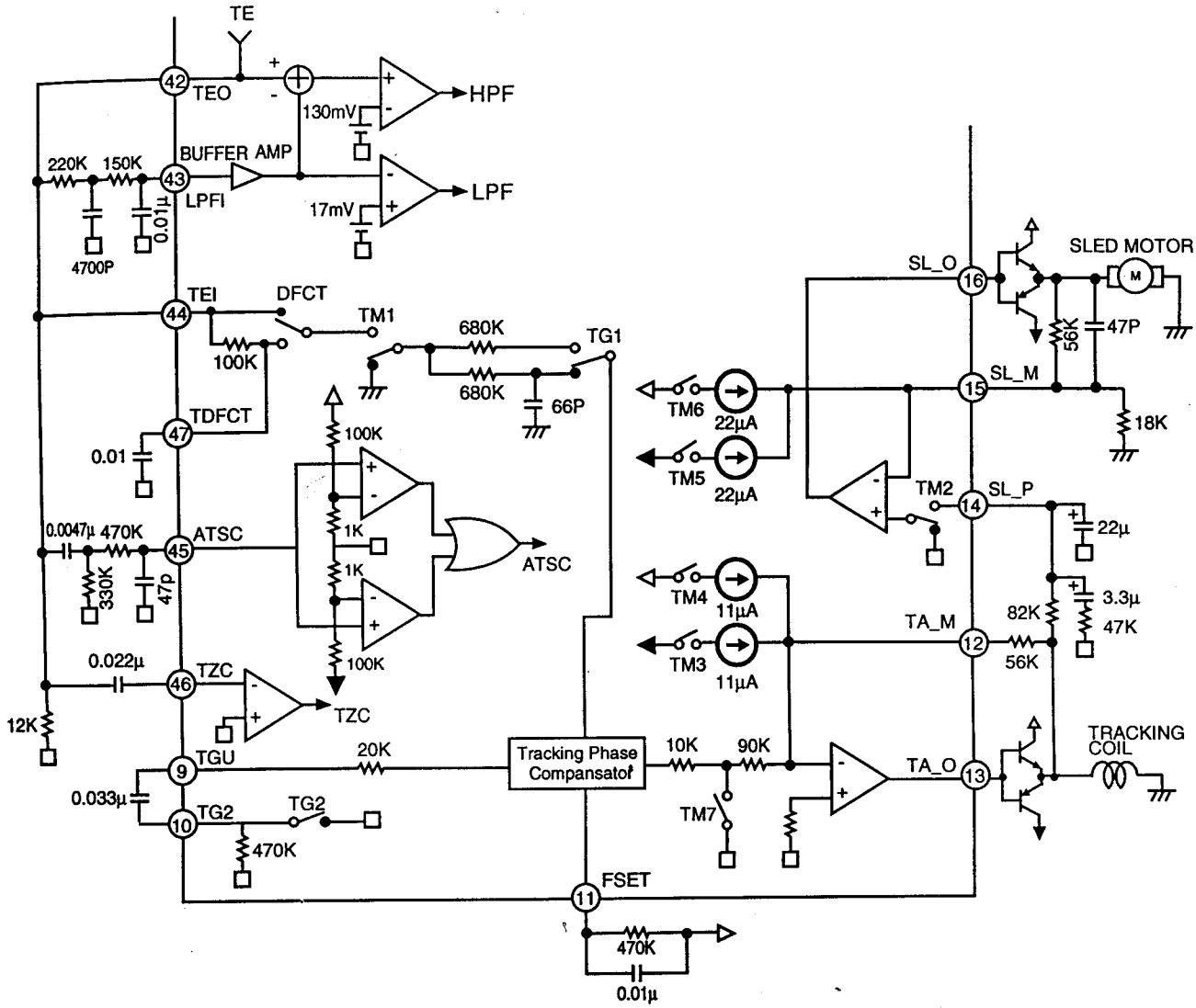

The above figure shows a block diagram of the tracking and sled servo.
The capacitor connected between Pins 9 and 10 is a time constant to decrease the high-frequency gain when TG2 is off. The peak frequency of the tracking phase compensation is approximately 1.2kHz when a 470K resistance connected to Pin 11. In the CXA1782, TG1 and TG2 are inter-linked switches.
To jump tracks in FWD and REV directions, turn TM3 or TM4 on. During this time, the peak voltage applied to the tracking coil is determined by the TM3 or TM4 current and the feedback resistance from Pin 12. To be more specific.

Track jump peak voltage = TM3 (or TM4) current feedback resistance value

The FWD and REV sled kick is performed by turning TM5 or TM6 on. During this time, the peak voltage applied to the sled motor is determined by the TM5 or TM6 current and the feedback resistance from Pin 15.

Sled jump peak voltage = TM5 (or TM6) current x feedback resistance

The values of the current for each switch are determined by the resistance connected between Pin 17 and GND. When this resistance is 120kΩ.

TM3 (or TM4) = ±11μA, and
TM5 (or TM6) = ±22μA

As is the case with the FE signal, the TE signal is switched to pass through a low-pass filter formed by the internal resistance (100kΩ) and the capacitance connected to Pin 47.

G. FOCUS OK CIRCUIT

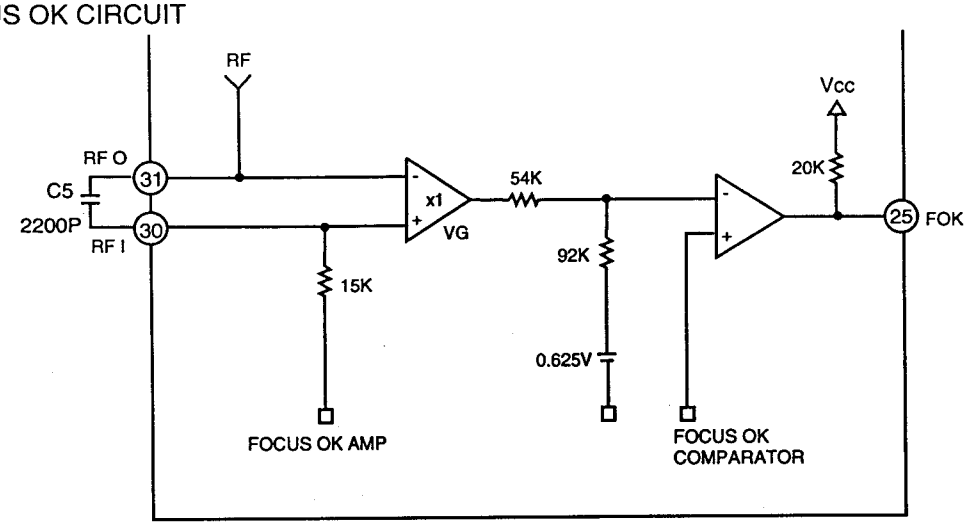

The focus OK circuit creates the timing window okaying the focus servo from the focus search state.
The HPF output is obtained at Pin 30 from Pin 31 (RF signal), and the LPF output (opposite phase) of the focus OK amplifier output is also obtained.
The focus OK output reverses when $V_{RFI}-V_{RFO} \fallingdotseq -0.37V$
Note that, C5 determines the time constant of the HPF for the EFM comparator and mirror circuit and the LPF of the focus OK amplifier. Ordinarily, with a C5 equal to 2200p selected, the fc is equal to 1kHz, and block error rate degradation brought about by RF envelope defects caused by scratched discs can be prevented.

H. DEFECT CIRCUIT

After the RFI signal is reversed, two time constants, long and short, are held at bottom. The short constant bottom hold responds to 0.1 ms or greater disc mirror defects, and the long time constant bottom hold holds the pre-defect mirror level. By differentiating and level shifting these constants with C coupler and comparing both signals, the mirror defect detection signal is generated.

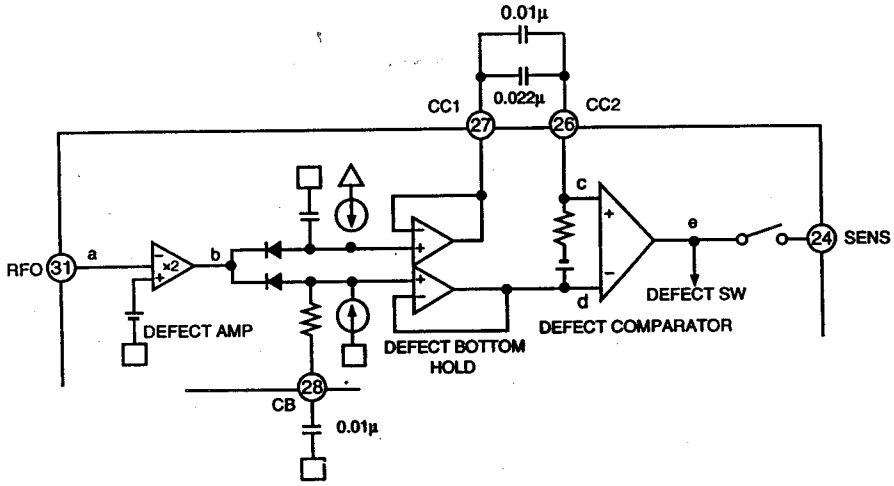

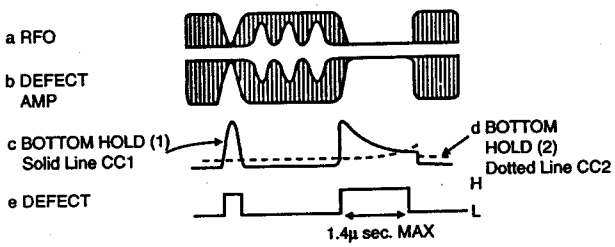

I. MIRROR CIRCUIT

The mirror circuit performs peak and bottom hold after the RFI signal has been amplified.
The peak and bottom holds are both held through the use of a time constant. For the peak hold, a time constant can follow a 30kHz traverse, and, for the bottom hold, one can follow the rotation cycle envelope [illegible]tion.

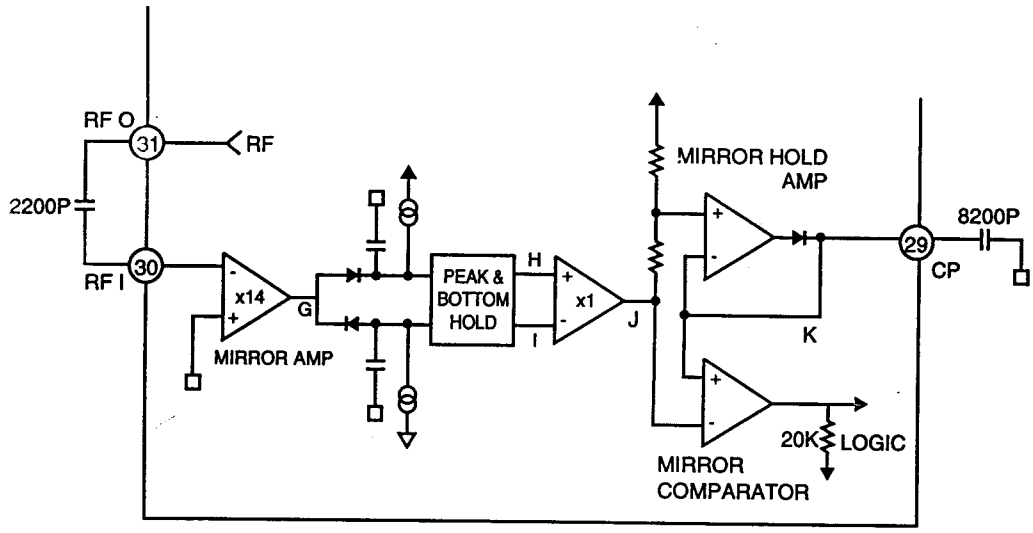

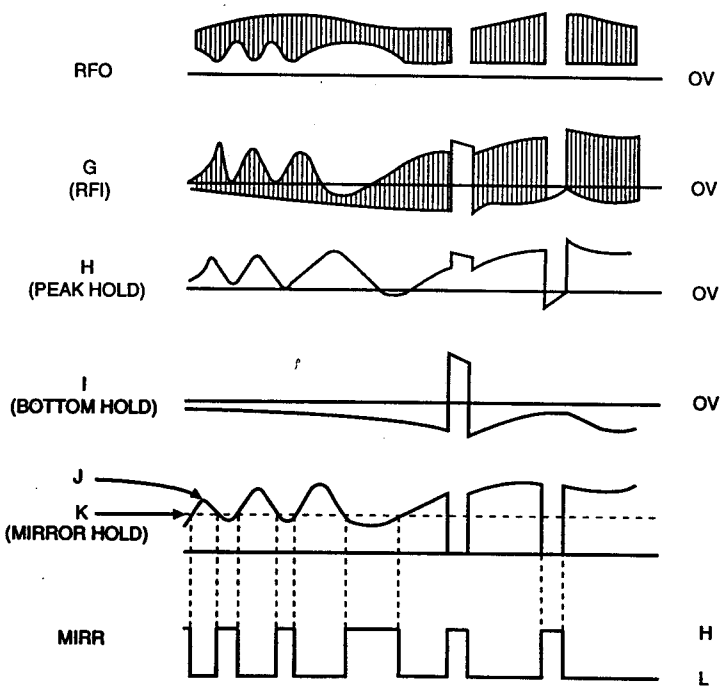

The DC playback envelope signal J is obtained by amplifying the difference between the peak and bottom hold signals H and I. Signal J has a large time constant of 2/3 its peak value, and the mirror output is obtained by comparing it to the peak hold signal K. Accordingly, when on the disc track, the mirror output is Low; when between tracks (mirrored portion), it is High, and when a defect is detected, it is High. The mirror hold time constant must be sufficiently large compared with the traverse signal.

2. IC502 CXD2508Q
CD DIGITAL SIGNAL PROCESSOR

CXD2508AQ
80 pin QFP (Plastic)

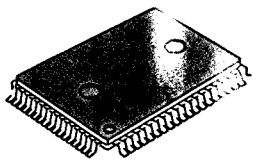

(1) DESCRIPTION

The CXD2508AQ/AR is a digital signal processor for CD players and is equipped with built-in digital filters, no-sound data detection circuit, and 1-bit DAC.

(2) FEATURES

DSP block

- Digital PLL
- EFM frame sync protection
- SEC strategy-based error correction
- Subcode demodulation, CRC checking
- Digital spindle servo
- Servo auto sequencer
- Asymmetry compensation circuit
- Digital audio interface output
- 16K RAM
- Double-speed playback capability
- New microcomputer interface circuit

Digital filter, DAC block

- Double-speed playback capability
- Digital de-emphasis
- Digital attenuation
- No-sound data detection circuit
- 4 Fs oversampling filter
- Secondary $\Delta\Sigma$ noise shaper
- PWM-system pulse conversion output

(3) BLOCK DIAGRAM

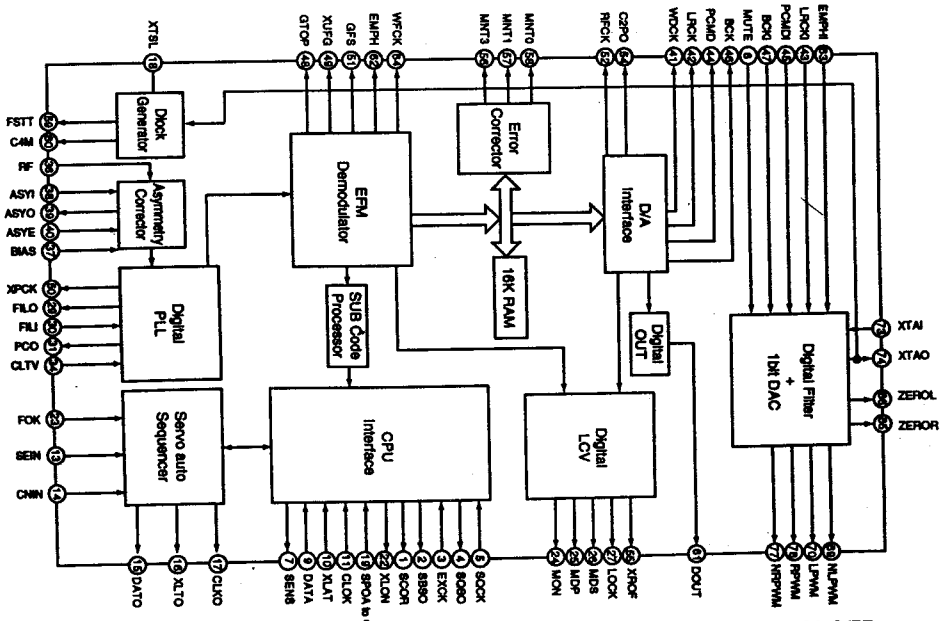

Note) The pin numbers are for QFP. Refer to the Pin Description for those of LQFP.

(4) PIN DESCRIPTION

Pin No.	Symbol	I/O	Description
1	SCOR	O	Outputs a high signal when either subcode sync S0 or S1 is detected.
2	SBSO	O	Sub P to W serial output.
3	EXCK	I	SBSO readout clock input.
4	SQSO	O	Sub Q 80-bit serial output.
5	SQCK	I	SQSO readout clock input.
6	MUTE	I	High; mute; low; release
7	SENS	O	SENS output to CPU.
8	XRST	I	System reset. Reset when low.
9	DATA	I	Serial data input from CPU.
10	XLAT	I	Latch input from CPU. Serial data is latched at the falling edge.
11	CLOK	I	Serial data transfer clock input from CPU.
12	Vss		GND.
13	SEIN	I	Sense input from SSP.
14	CNIN	i	Track jump count signal input.
15	DATO	O	Serial data output to SSP.
16	XLTO	O	Serial data latch output to SSP. Latched at the falling edge.
17	CLKO	O	Serial data transfer clock output to SSP.
18	SPOA	I	Microcomputer extended intertace (input A).
19	SPOB	I	Microcomputer extended interface (input B).
20	SPOC	I	Microcomputer extended interface (input C).
21	XTSL	I	Crystal selection input. Low for 16.9344MHz; high for 33.8688MHz
22	XLON	O	Microcomputer extended interface (output).
23	FOK	I	Focus OK input. Used for SENS output and the servo auto sequencer.
24	MON	O	Spindle motor on/off control output.
25	MDP	O	Spindle motor servo control.
26	MDS	O	Spindle motor servo control.
27	LOCK	O	GFS is sampled at 460Hz; when GFS is high, this pin outputs a high signal. If GFS is low eight consecutive samples, this pin outputs low.
28	TEST	I	TEST pin. Normally GND.
29	FILO	O	Master PLL (slave=digital PLL) filter output.
30	FILI	I	Master PLL filter input.
31	PCO	O	Master PLL charge pump output.

Pin No.	Symbol	I/O	Description
32	V_{DD}		Digital power supply for DSP.
33	AVss1		Analog GND for DSP.
34	CLTV	I	Master PLL VCO control voltage input.
35	AVDD1		Analog power supply for DSP.
36	RF	I	EFM signal input.
37	BIAS	I	Constant current input of asymmetry compensation circuit.
38	ASYI	I	Comparator voltage input of asymmetry compensation circuit.
39	ASYO	O	EFM full-swing output (low-Vss, high-V_{DD}).
40	ASYE	I	Low: asymmetry compensation off; high: asymmetry compensation on.
41	WDCK	O	D/A interface for 48-bit slot. Word clock (2Fs).
42	LRCK	O	D/A interface for 48-bit slot. LR clock (Fs).
43	LRCKI	I	LR clock input for DAC. (48-bit slot)
44	PCMD	O	D/A interface. Serial data (two's complement, MSB first).
45	PCMDI	I	Audio data input for DAC. (48-bit slot)
46	BCK	O	D/A interface. Bit clock.
47	BCKI	I	Bit clock input for DAC. (48-bit slot)
48	GTOP	O	GTOP output.
49	XUGF	O	XUGF output.
50	XPCK	O	XPLCK output.
51	GFS	O	GFS output.
52	RFCK	O	RFCK output.
53	Vss		GND.
54	C2PO	O	C2PO output.
55	XROF	O	XRAOF output.
56	MNT3	O	MNT3 output.
57	MNT1	O	MNT1 output.
58	MNT0	O	MNT0 output.
59	FSTT	O	2/3 frequency-divider output for Pins 73 and 74.
60	C4M	O	4.2336MHz output.
61	DOUT	O	Digital Out output.
62	EMPH	O	Outputs high signal when the playback disc has emphasis, low signal when no emphasis.
63	EMPHI	I	DAC de-emphasis on/off. High: on; low: off.
64	WFCK	O	WFCK (write frame clock) output.

Pin No.	Symbol	I/O	Description
65	ZEROL	O	No-sound data detection output; high when no sound data is detected. (Left channel)
66	ZEROR	O	No-sound data detection output; high when no sound data is detected. (Right channel)
67	DTS1	I	Test pin 1 for DAC; normally low.
68	V_{DD}		Digital power supply for DAC.
69	NLPWM	O	Left channel PWM output. (Reverse phase)
70	LPWM	O	Left channel PWM output. (Forward phase)
71	$AV_{DD}2$		Power supply for left channel PWM driver.
72	$AV_{DD}3$		Power supply for crystal.
73	XTAI	I	16.934MHz crystal oscillation circuit input.
74	XTAO	O	16.934MHz crystal oscillation circuit output.
75	AVss3		GND for crystal.
76	AVss2		GND for PWM driver.
77	NRPWM	O	Right channel PWM output. (Reverse phase)
78	RPWM	O	Right channel PWM output. (Forward phase)
79	DTS2	I	DAC test pin 2; normally low.
80	DTS3	I	DAC test pin 3; normally low.

4. MAJOR WAVEFORM

TRACKING ERROR (REW)

1 —
2 —

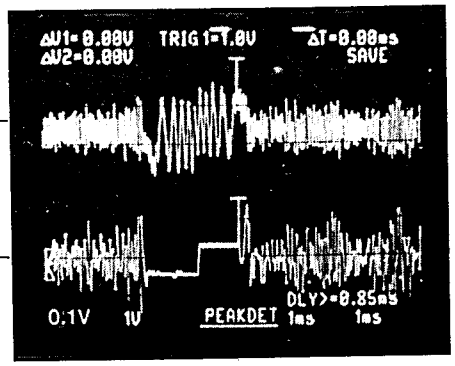

● **Connection :** 1. IC501 pin ㊷. (TEO)
2. IC501 pin ⑬.

● **Inspection** : Check tracking servo circuit. (RWD)

TRACKING ERROR (FWD)

1 —
2 —

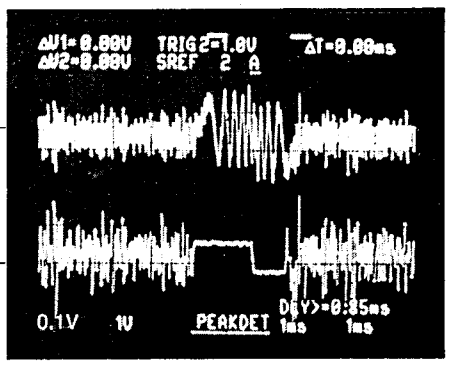

● **Connection :** 1. IC501 pin ㊷. (TEO)
2. IC501 pin ⑬.

● **Inspection** : Check tracking servo circuit. (FWD)

FOCUS (PLAY)

3 —

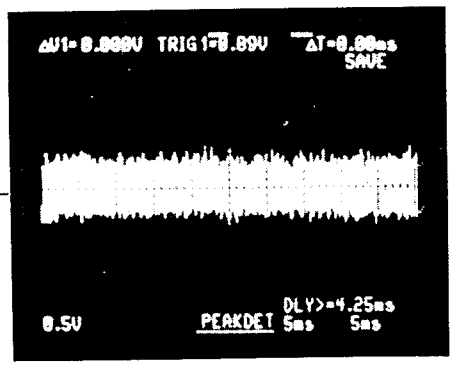

● **Connection :** 3. IC503 pins ① and ②.
※ Test disc: YEDS-43

● **Inspection** : Check focus servo circuit.

TRACKING (PLAY)

4 —

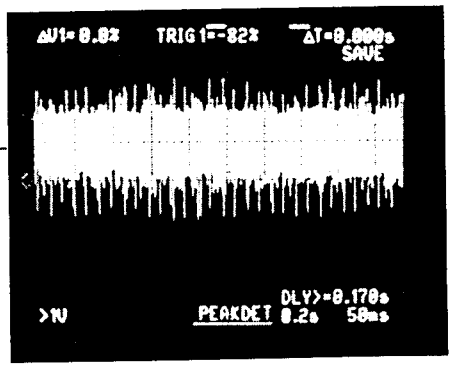

● **Connection :** 4. IC503 pins ㉖ and ㉗.
※ Test disc: YEDS-43

● **Inspection** : Check tracking servo circuit.

TRACKING COIL DRIVE

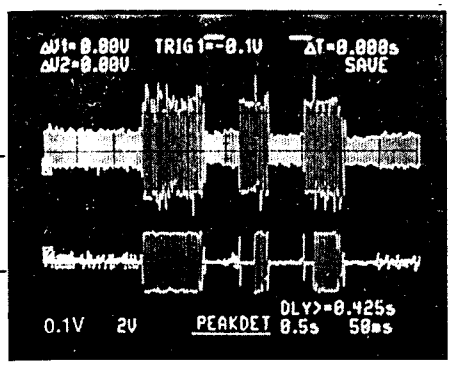

1
2

● **Connection :** 1. IC501 pin ㊷. (TEO)
2. IC501 pin ⑬.

● **Inspection :** - Check tracking servo circuit.
- Check IC501. (Cold solder joint or short circuit)

E.F. BALANCE

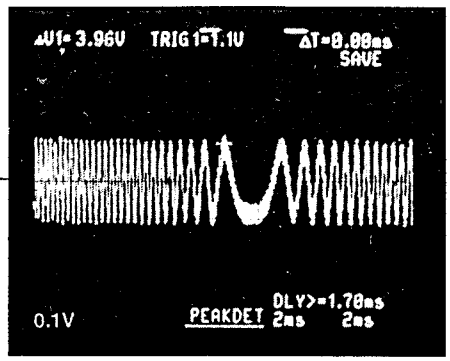

1

● **Connection :** 1. IC501 pin ㊷.

● **Inspection :** - Check tracking balance adjustment
- Check CN501 and CN502.

LASER ON

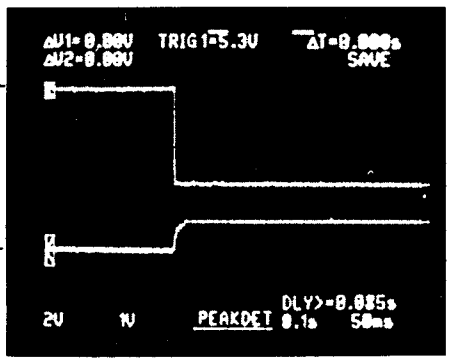

5
6

● **Connection :** 5. IC502 pin ㉒.
6. Q501 Collector.

● **Inspection :** - Check IC502 pin ㉒ to Q507 BASE (Pattern defective)
- Check Q501, Q503 and Q507.

READING

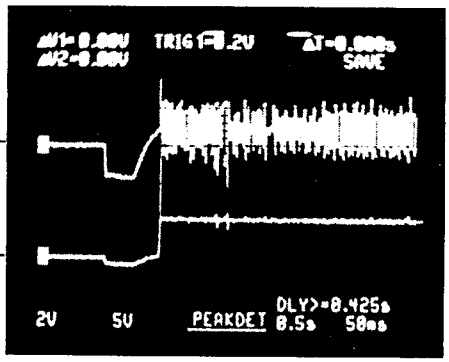

7
8

● **Connection :** 7. IC501 pin ⑥.
8. IC501 pin ㉕. (FOK)

● **Inspection :** Check IC501 pin ⑥ to IC503 pin ④. (Pattern defective)

9

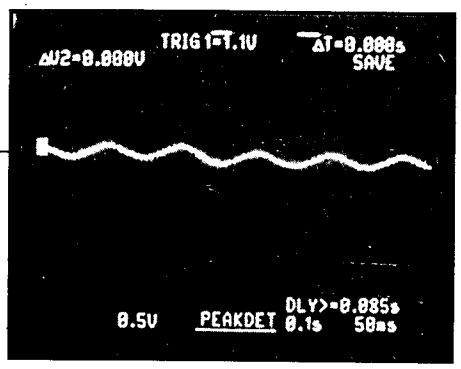

● **Connection :** 9. IC503 pins ⑰ and ⑱

● **Inspection :** - Check IC501 pin ⑯ to IC503 pin ⑳ (Pattern defective)

10

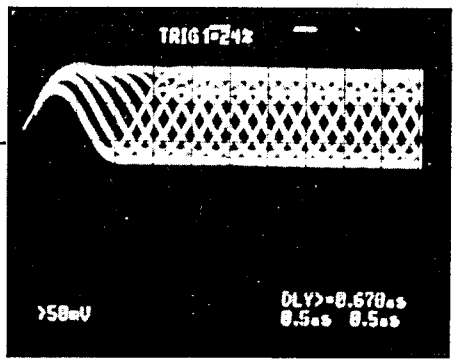

● **Connection :** 10. IC501 pin ㉛.

● **Inspection :** - Check focus offset adjustment. (VR501)

3

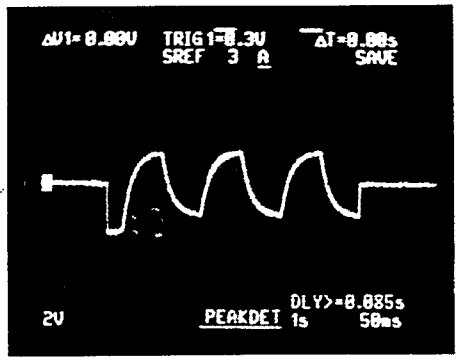

● **Connection :** 3. IC503 pins ① and ②.

● **Inspection :** - Is focus search signal output to IC501 pin ⑥?

11

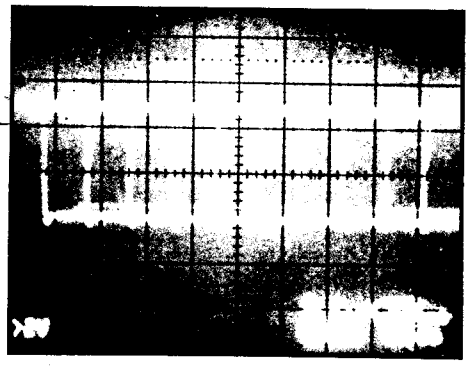

● **Connection :** 11. IC502 pin ㊴.

● **Inspection :** - Check IC502 and surrounding circuit (Cold solder joint or short circuit)

5. TROUBLESHOOTING GUIDE

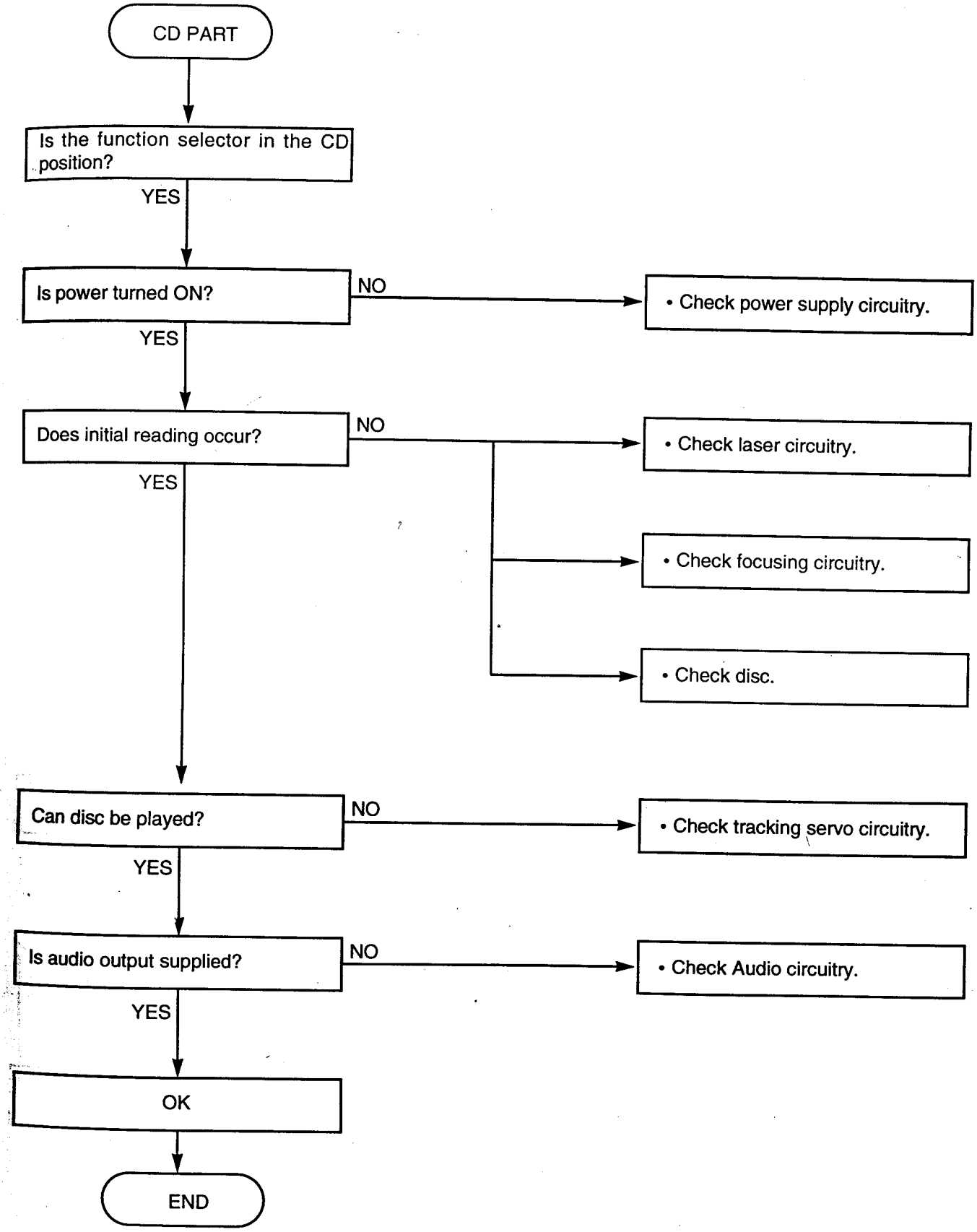

(1) If display LCD lighting is abnormal

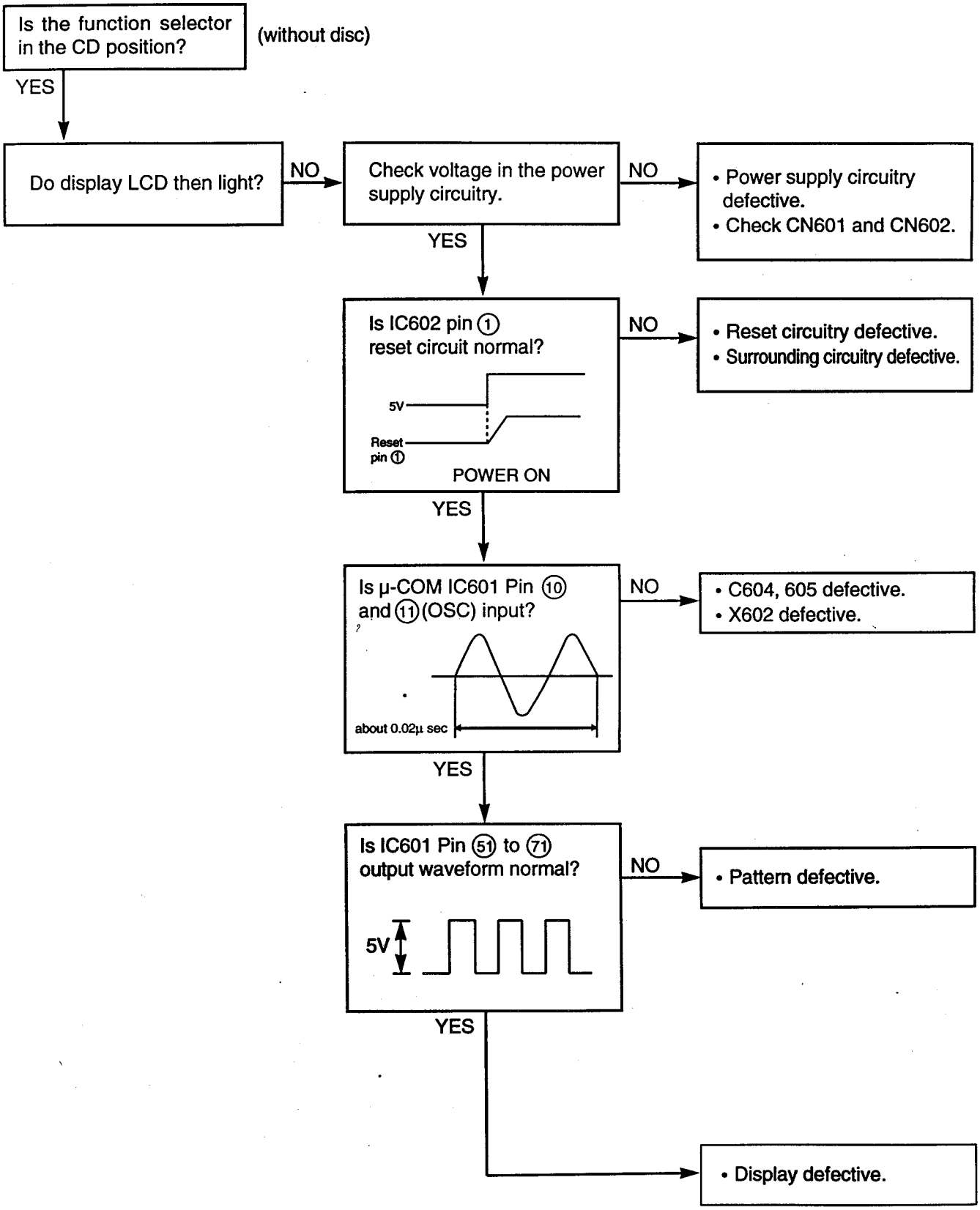

(2) If initial reading is not carried out (with disc)

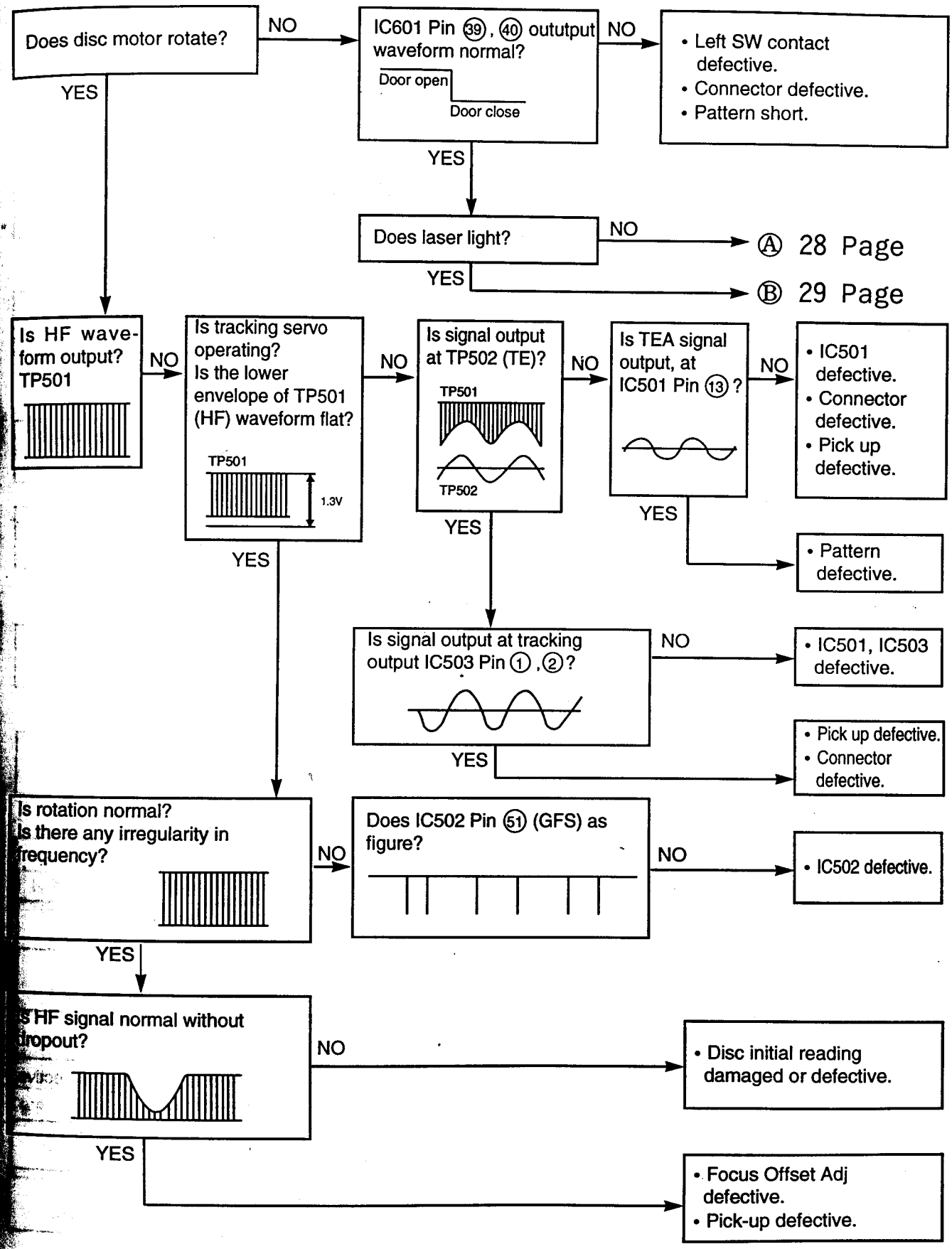

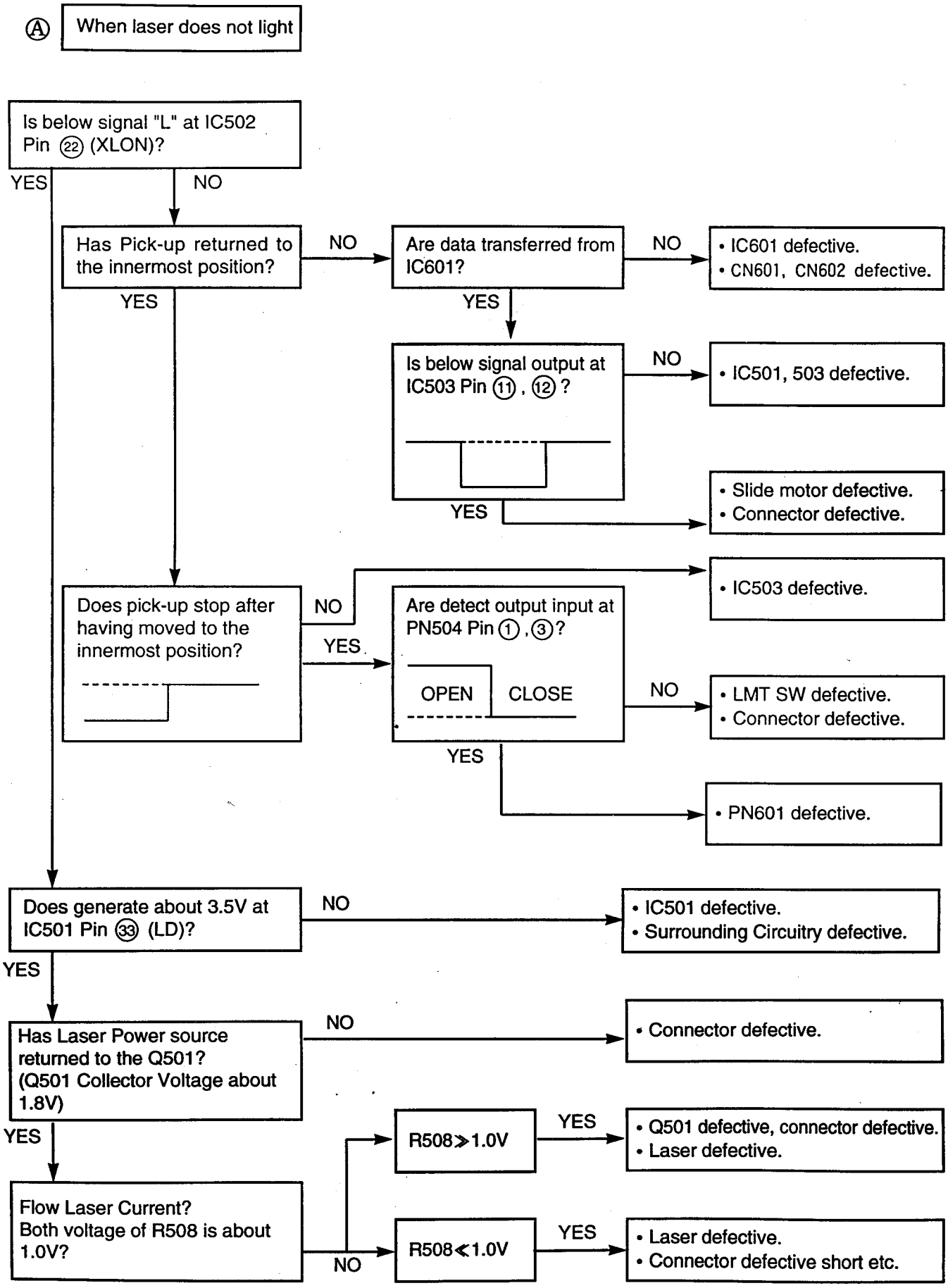
Ⓐ When laser does not light
Is below signal "L" at IC502 Pin ㉒ (XLON)?
YES
NO
Has Pick-up returned to the innermost position?
NO
Are data transferred from IC601?
NO
• IC601 defective.
• CN601, CN602 defective.
YES
YES
Is below signal output at IC503 Pin ⑪, ⑫ ?
NO
• IC501, 503 defective.
YES
• Slide motor defective.
• Connector defective.
Does pick-up stop after having moved to the innermost position?
NO
• IC503 defective.
YES
Are detect output input at PN504 Pin ①, ③?
OPEN
CLOSE
NO
• LMT SW defective.
• Connector defective.
YES
• PN601 defective.
Does generate about 3.5V at IC501 Pin ㉝ (LD)?
NO
• IC501 defective.
• Surrounding Circuitry defective.
YES
Has Laser Power source returned to the Q501? (Q501 Collector Voltage about 1.8V)
NO
• Connector defective.
YES
R508≫1.0V
YES
• Q501 defective, connector defective.
• Laser defective.
Flow Laser Current? Both voltage of R508 is about 1.0V?
NO
R508≪1.0V
YES
• Laser defective.
• Connector defective short etc.

Ⓑ When laser light

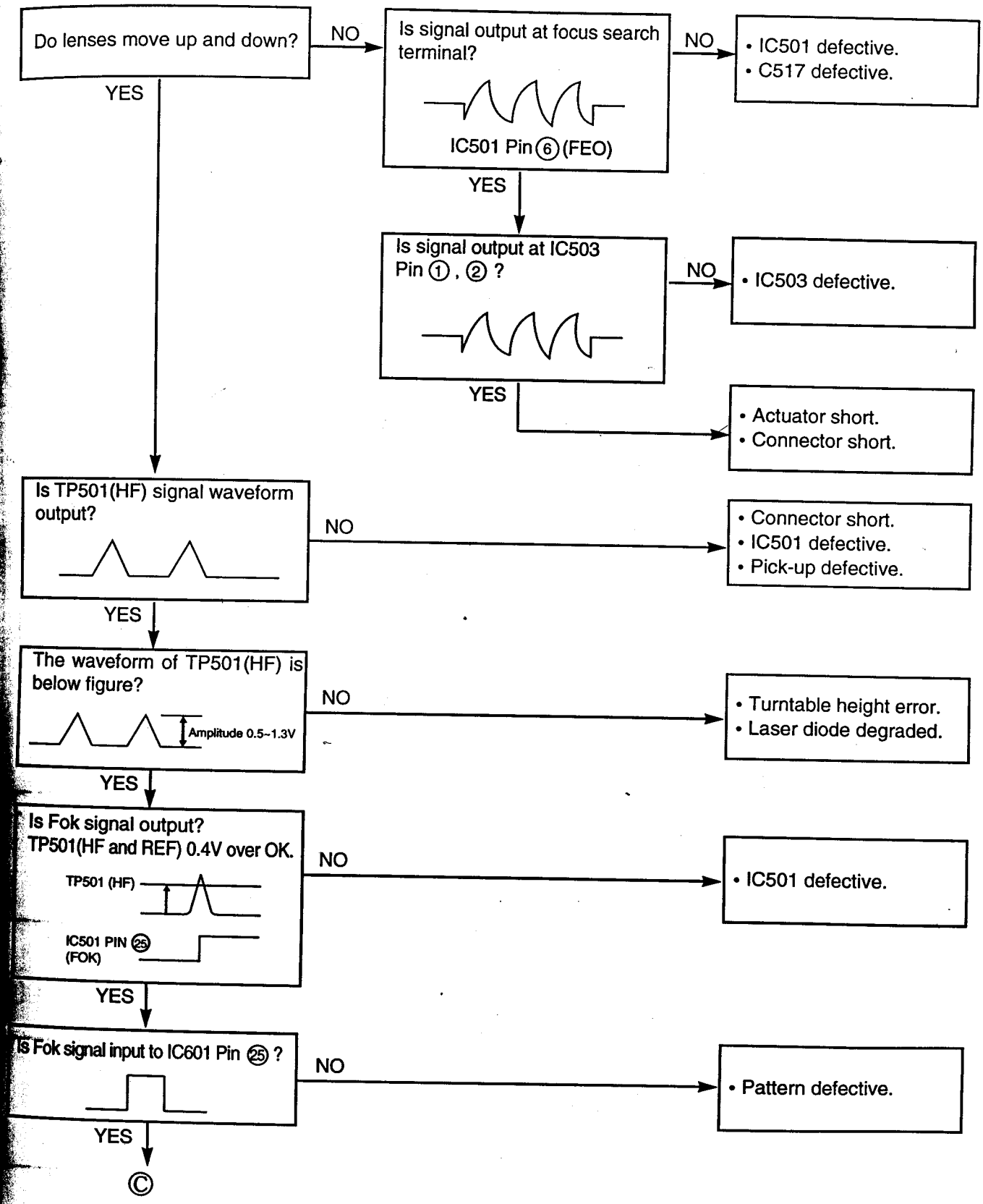

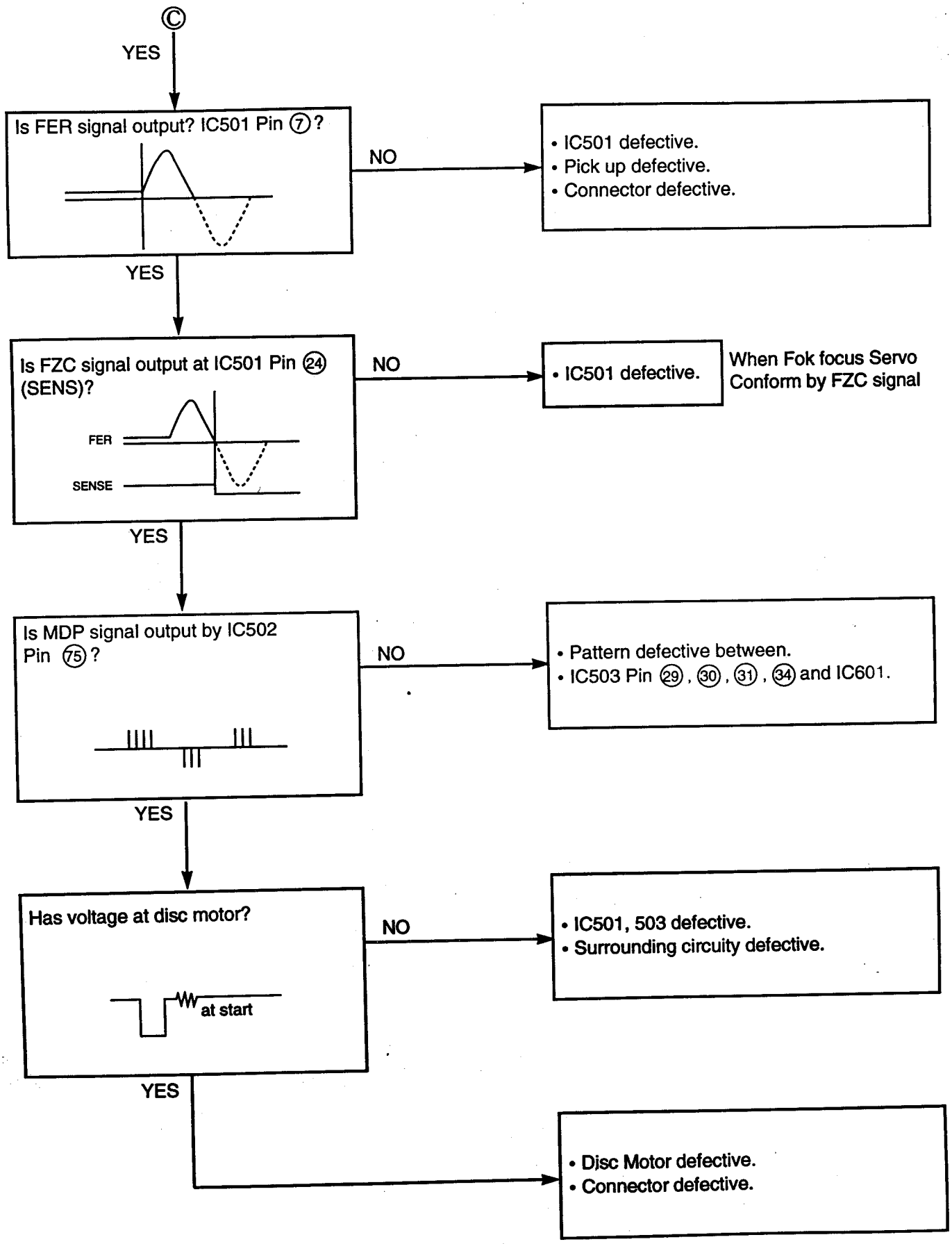
Ⓒ
YES
Is FER signal output? IC501 Pin ⑦?
NO
• IC501 defective.
• Pick up defective.
• Connector defective.
YES
Is FZC signal output at IC501 Pin ㉔ (SENS)?
FER
SENSE
NO
• IC501 defective.
When Fok focus Servo Conform by FZC signal
YES
Is MDP signal output by IC502 Pin ㉕?
NO
• Pattern defective between.
• IC503 Pin ㉙, ㉚, ㉛, ㉞ and IC601.
YES
Has voltage at disc motor?
at start
NO
• IC501, 503 defective.
• Surrounding circuity defective.
YES
• Disc Motor defective.
• Connector defective.

6. PCB LAYOUT

1. CDP SECTION (TOP VIEW)

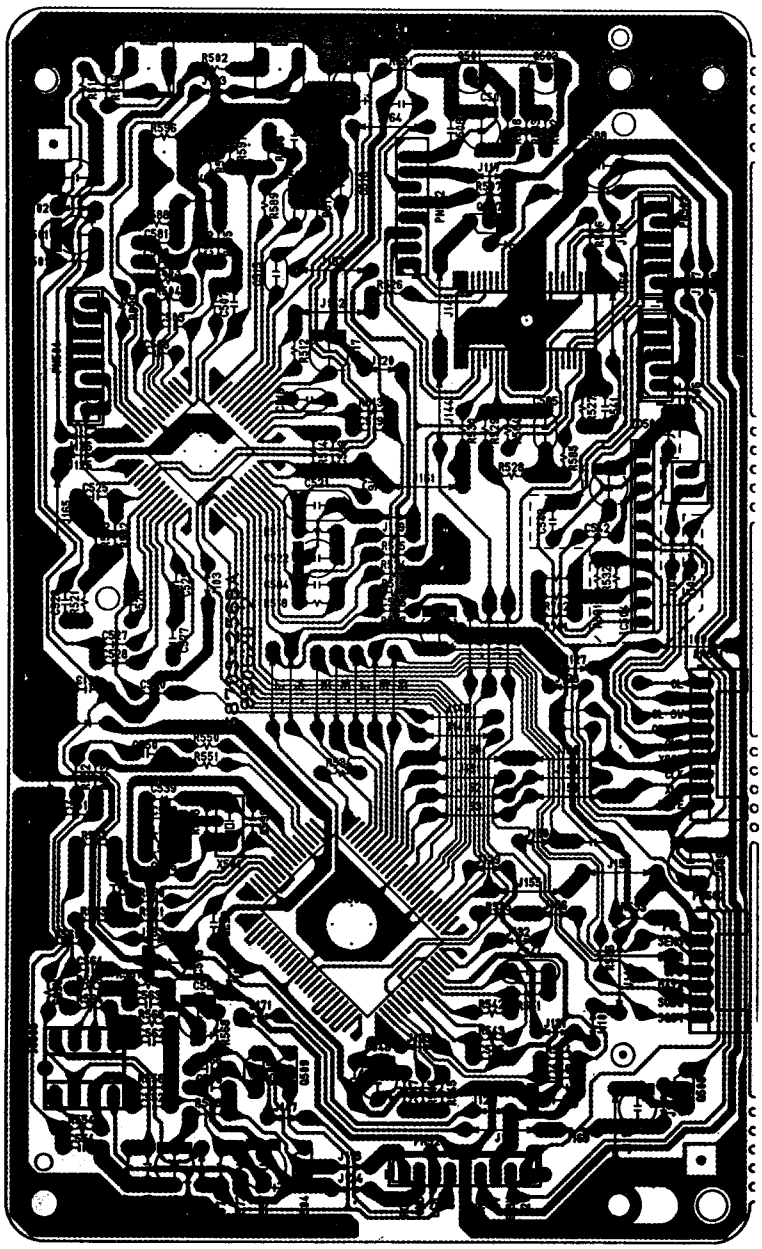

NOTES: 1. PCB Layout for this model are subject to change for improvement without prior notice.
2. Drawing No.: AS-256BA ('95. 6. 20/1st)

2. CDP SECTION (BOTTOM VIEW)

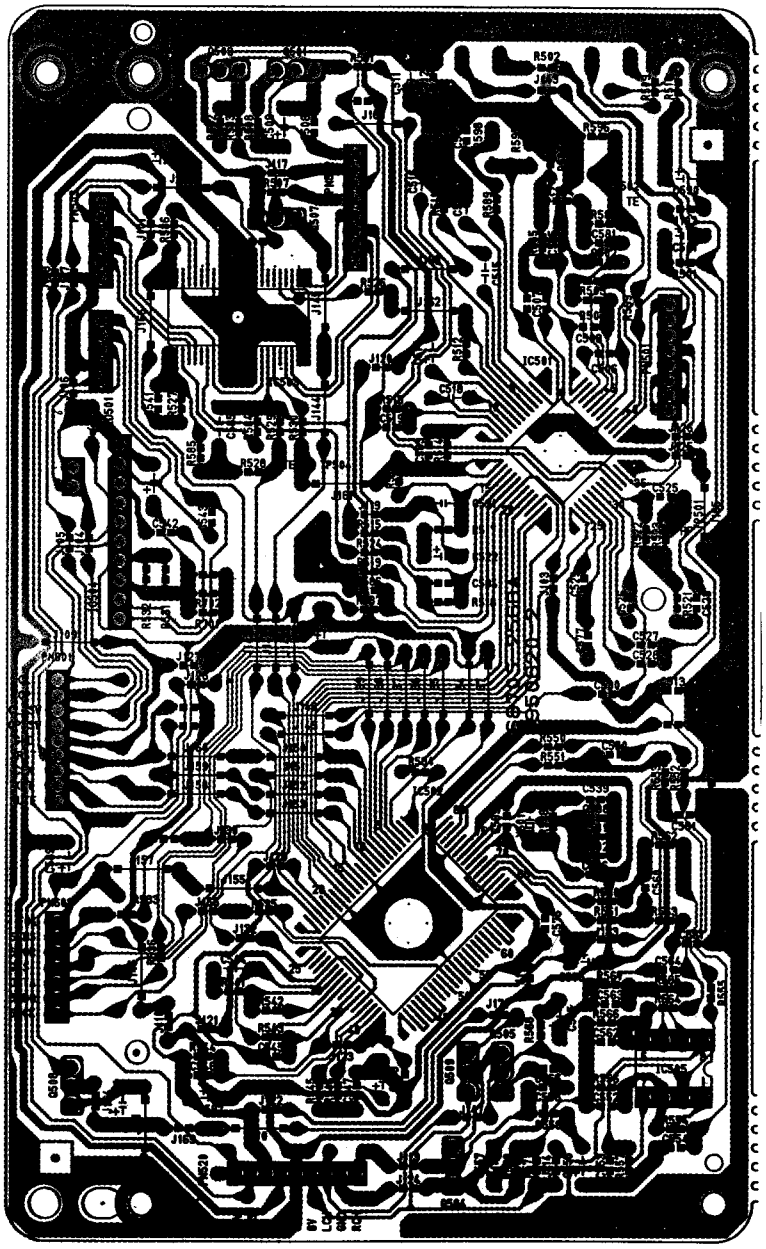

NOTES: 1. PCB Layout for this model are subject to change for improvement without prior notice.
2. Drawing No.: AS-256BA ('95. 6. 20/1st)

3. POWER SECTION (TOP VIEW) : for SINGLE VOLTAGE

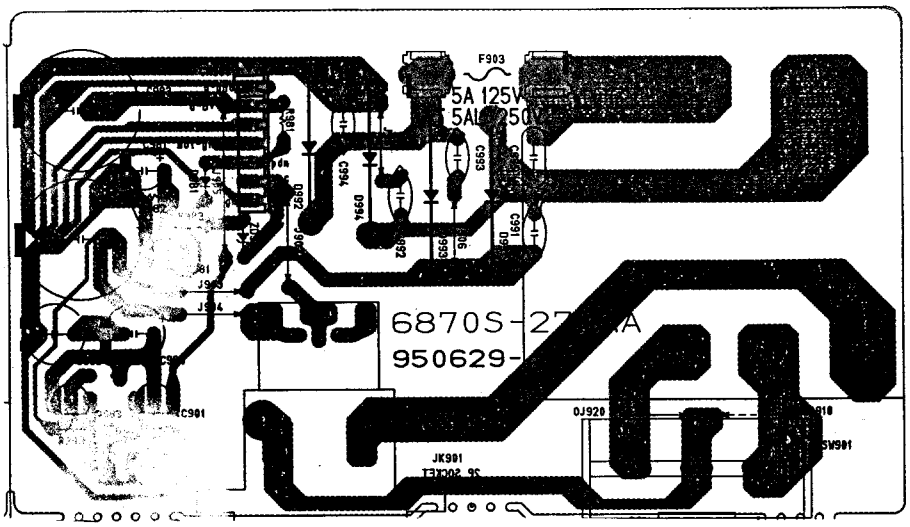

NOTES: 1. Block diagram for this model are subject to change for improvement without prior notice.
2. Drawing No.: 6870S-272AA ('95. 6. 29/1st)

4. POWER SECTION (BOTTOM VIEW) : for SINGLE VOLTAGE

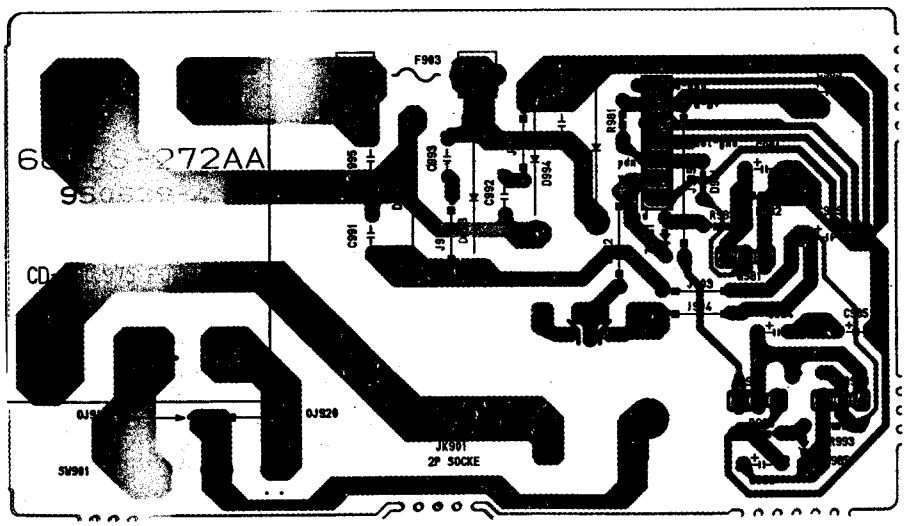

NOTES: 1. Block diagram for this model are subject to change for improvement without prior notice.
2. Drawing No.: 6870S-272AA ('95. 6. 29/1st)

5. POWER SECTION (TOP VIEW) : for DOUBLE VOLTAGE

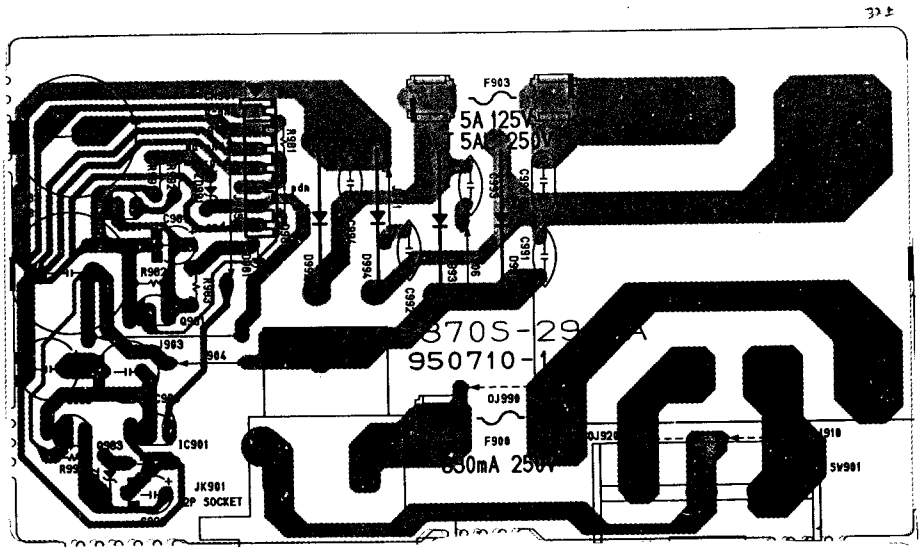

NOTES: 1. PCB Layout for this model are subject to change for improvement without prior notice.
2. Drawing No.: 6870S-29JAA ('95. 7. 10/1st)

6. POWER SECTION (BOTTOM VIEW) : for DOUBLE VOLTAGE

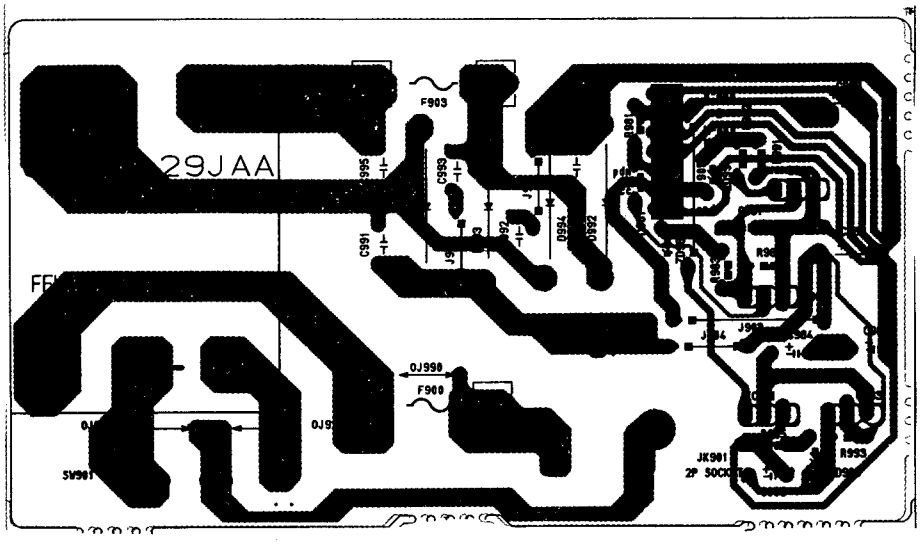

NOTES: 1. PCB Layout for this model are subject to change for improvement without prior notice.
2. Drawing No.: 6870S-29JAA ('95. 7. 10/1st)

7. AUDIO SECTION (TOP VIEW)

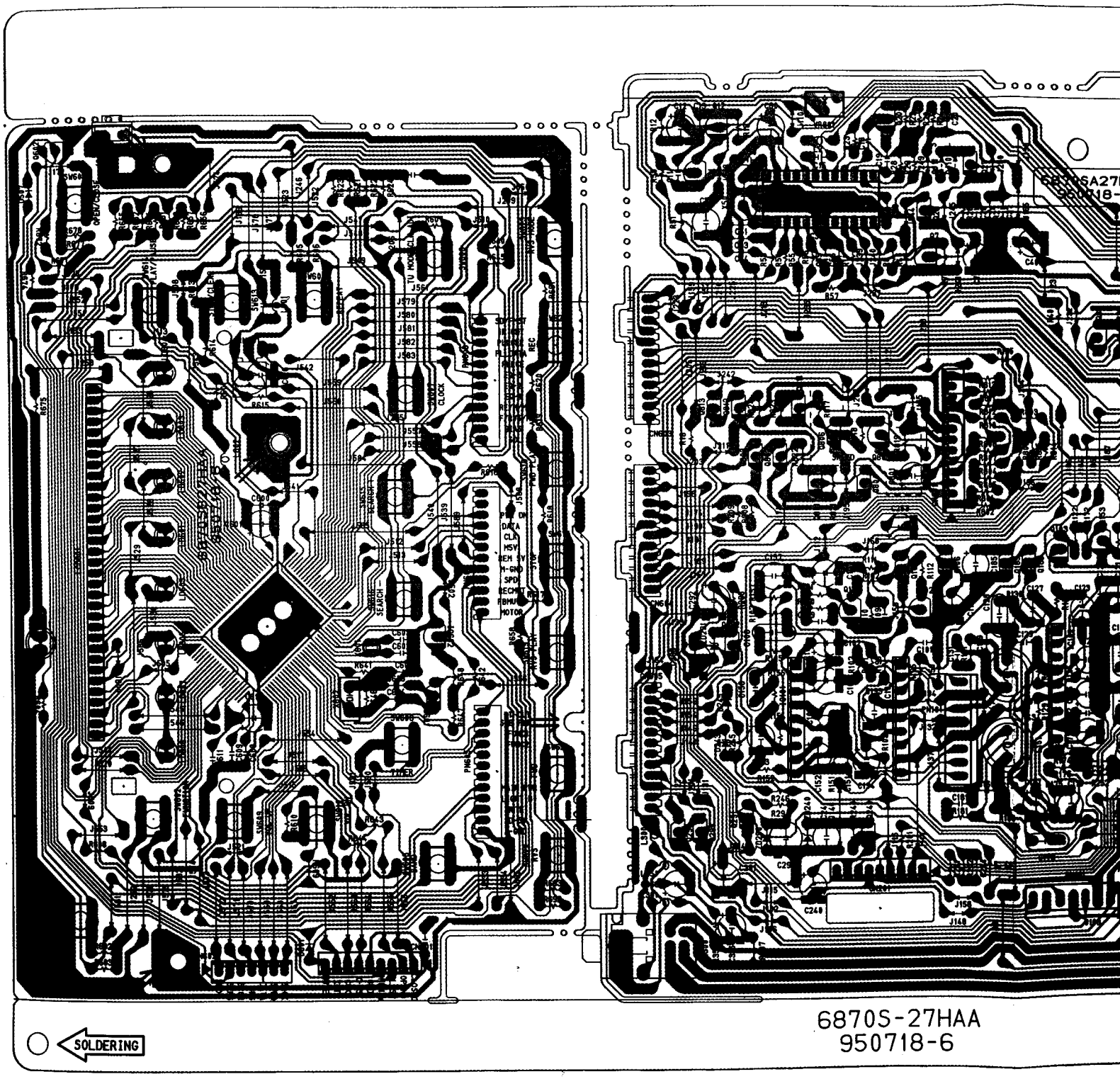

NOTES: 1. PCB Layout for this model are subject to change
2. Drawing No.: 6870S-27HAA ('95. 7. 18/1st)

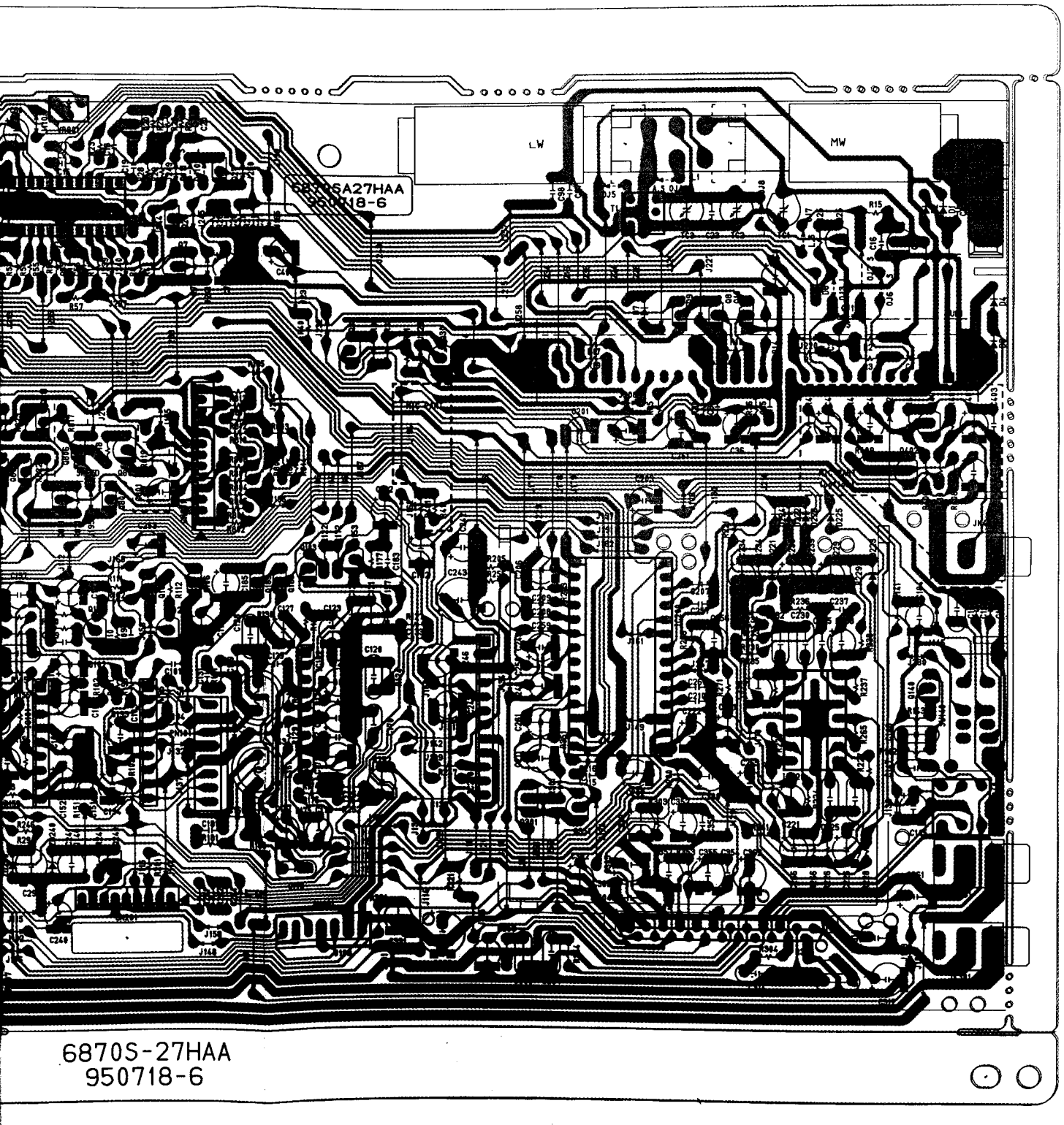

6870S-27HAA
950718-6

TES: 1. PCB Layout for this model are subject to change for improvement without prior notice.
2. Drawing No.: 6870S-27HAA ('95. 7. 18/1st)

8. AUDIO SECTION (BOTTOM VIEW)

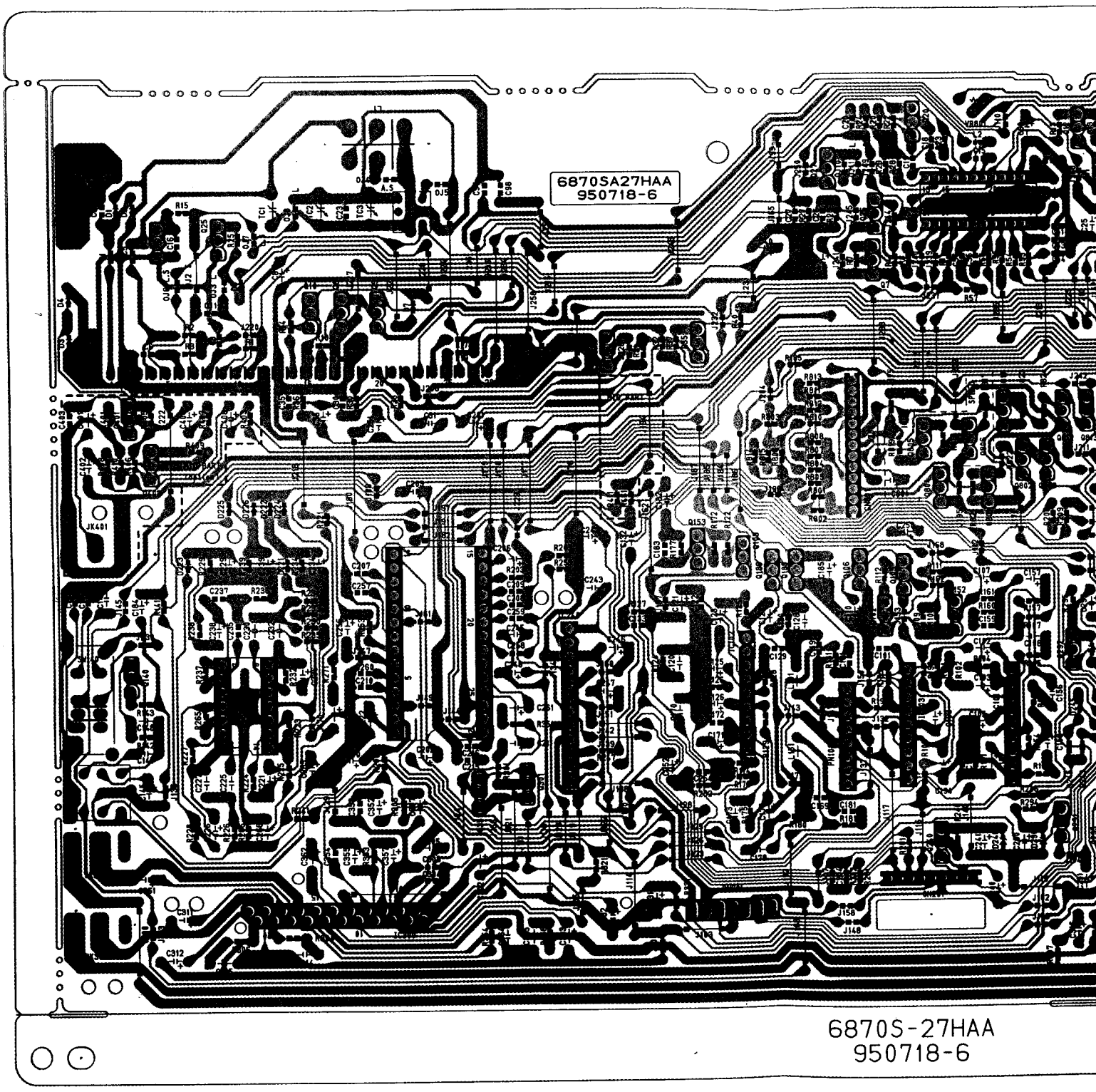

NOTES: 1. PCB Layout for this model are subject to change for improvement without prior notice.
2. Drawing No.: 6870S-27HAA ('95. 7. 18/1st)

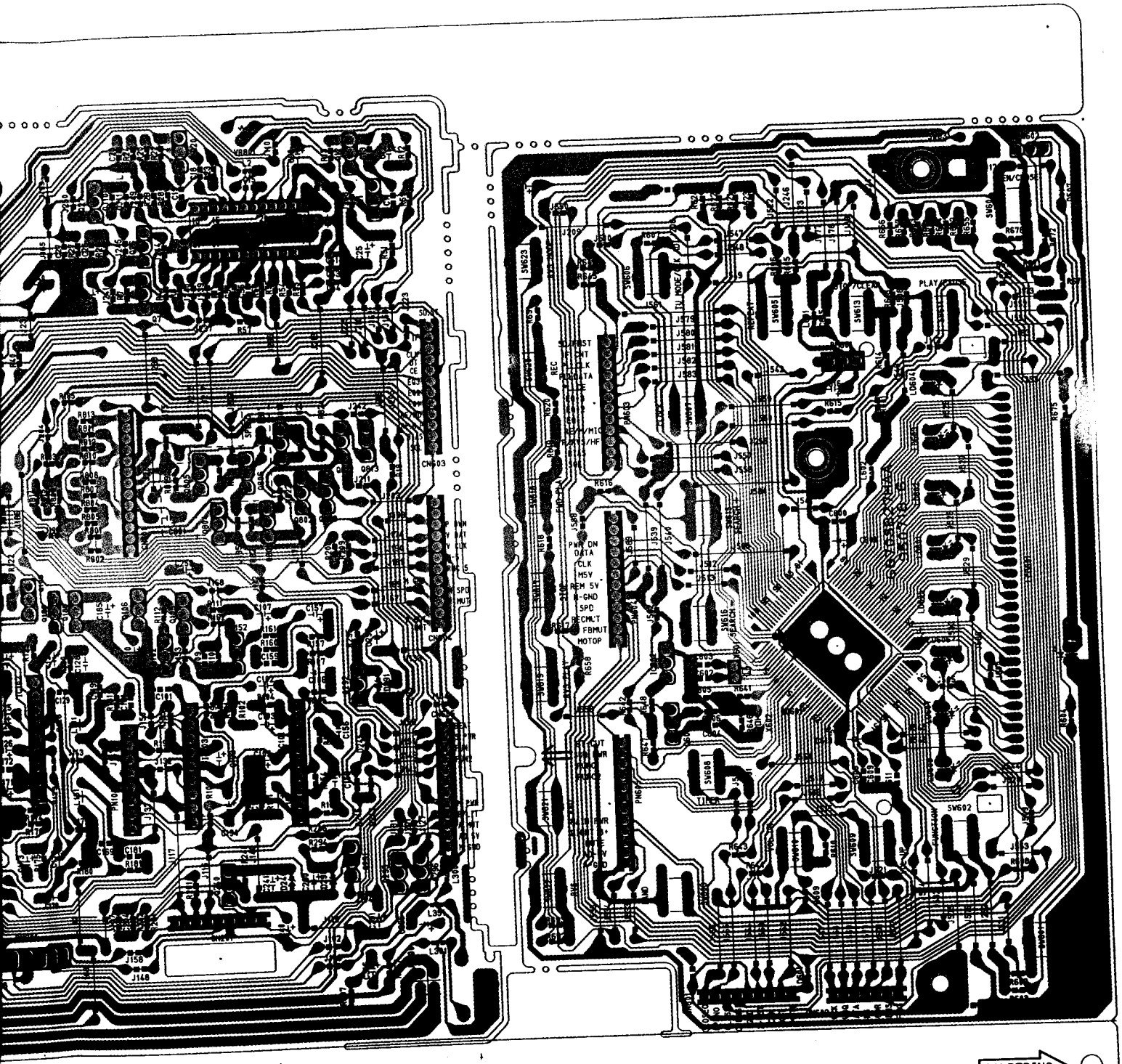

6870S-27HAA
950718-6

are subject to change for improvement without prior notice.
A ('95. 7. 18/1st)

7. BLOCK DIAGRAM

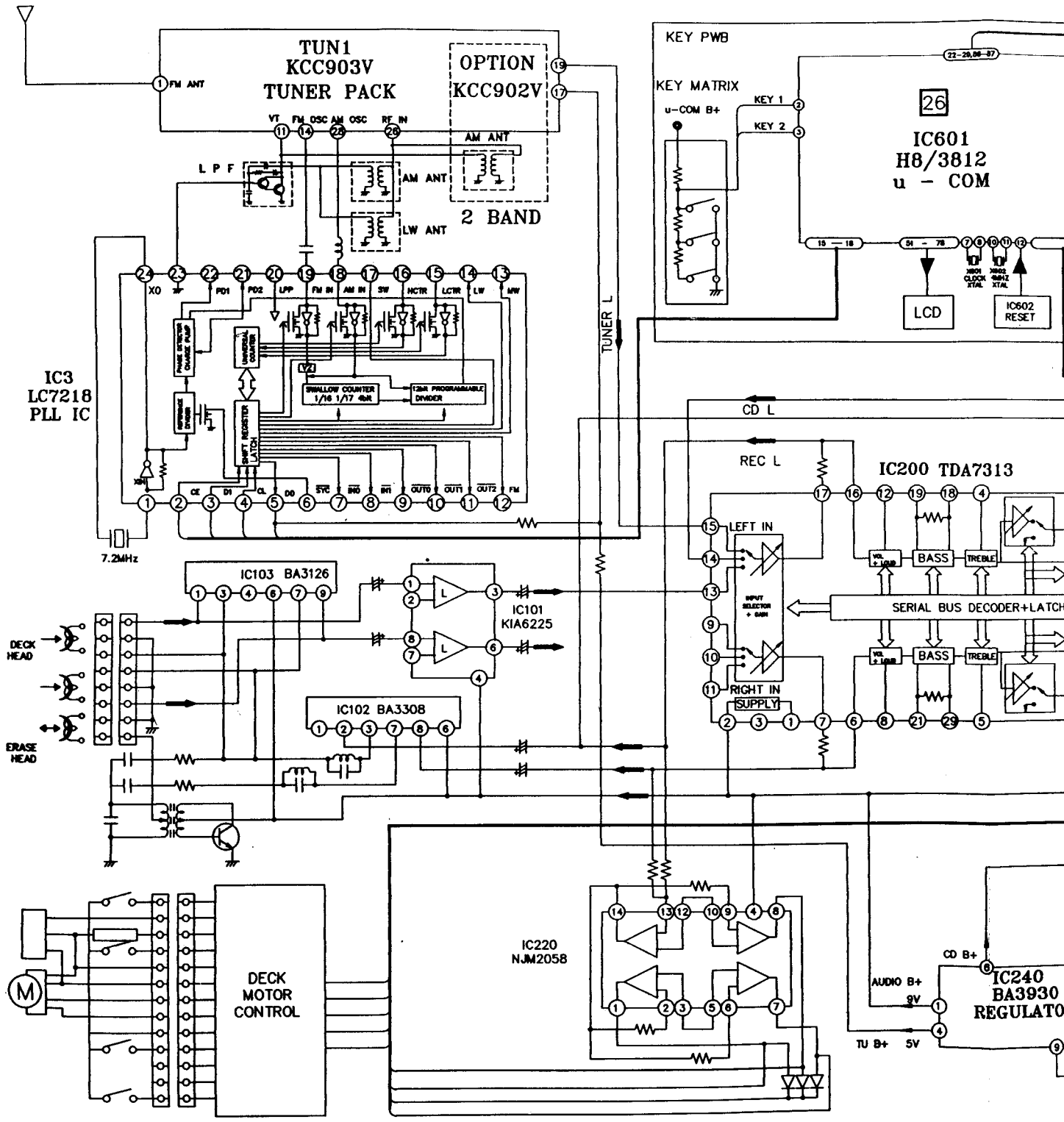

NOTES: 1. Block diagram for this model are subject to cha
2. Drawing No.: AS-0179B ('95. 8. 5/2nd)

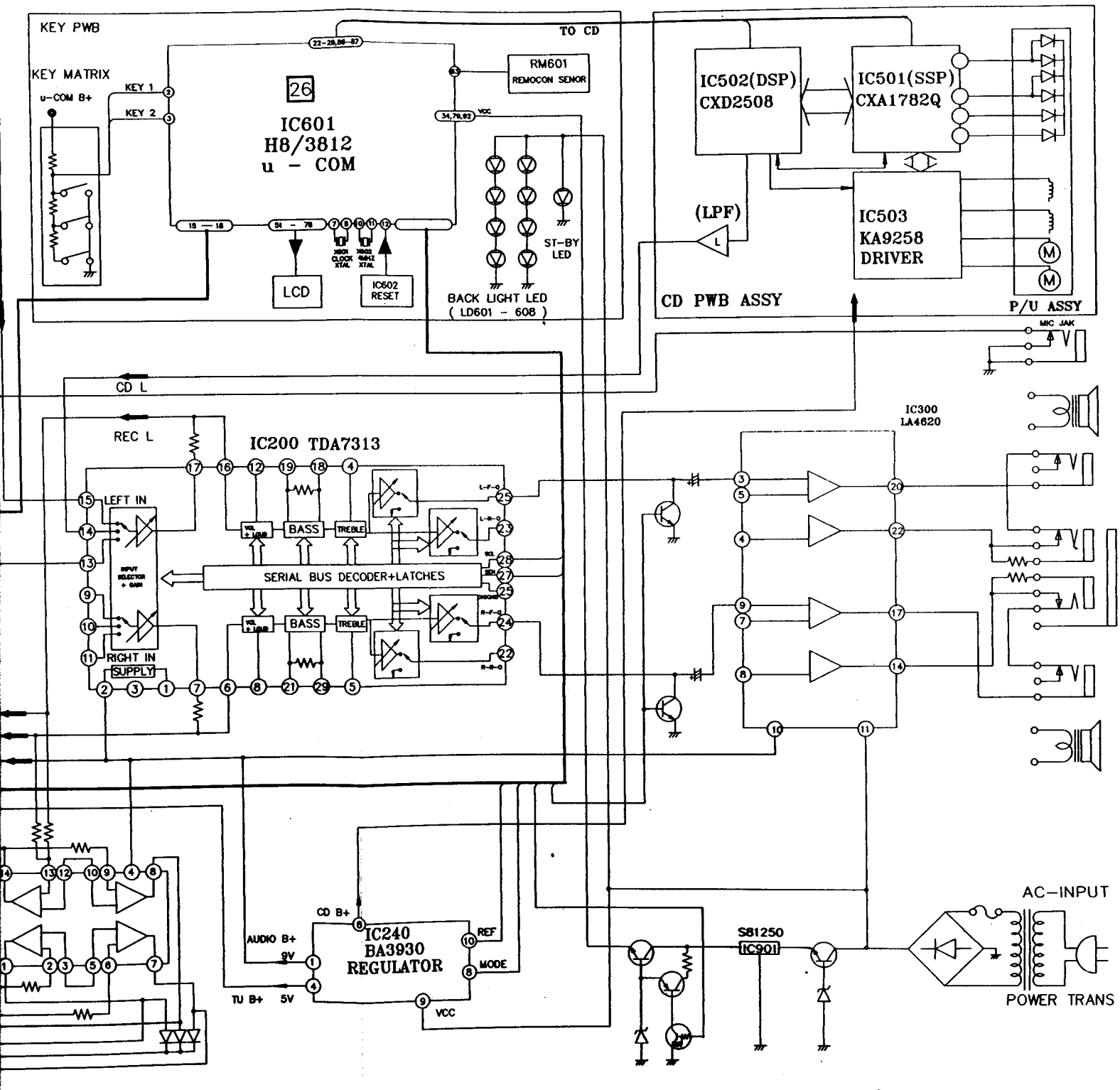

NOTES: 1. Block diagram for this model are subject to change for improvement without prior notice.
2. Drawing No.: AS-0179B ('95. 8. 5/2nd)

8. SCHEMATIC DIAGRAM

1. KEY SECTION

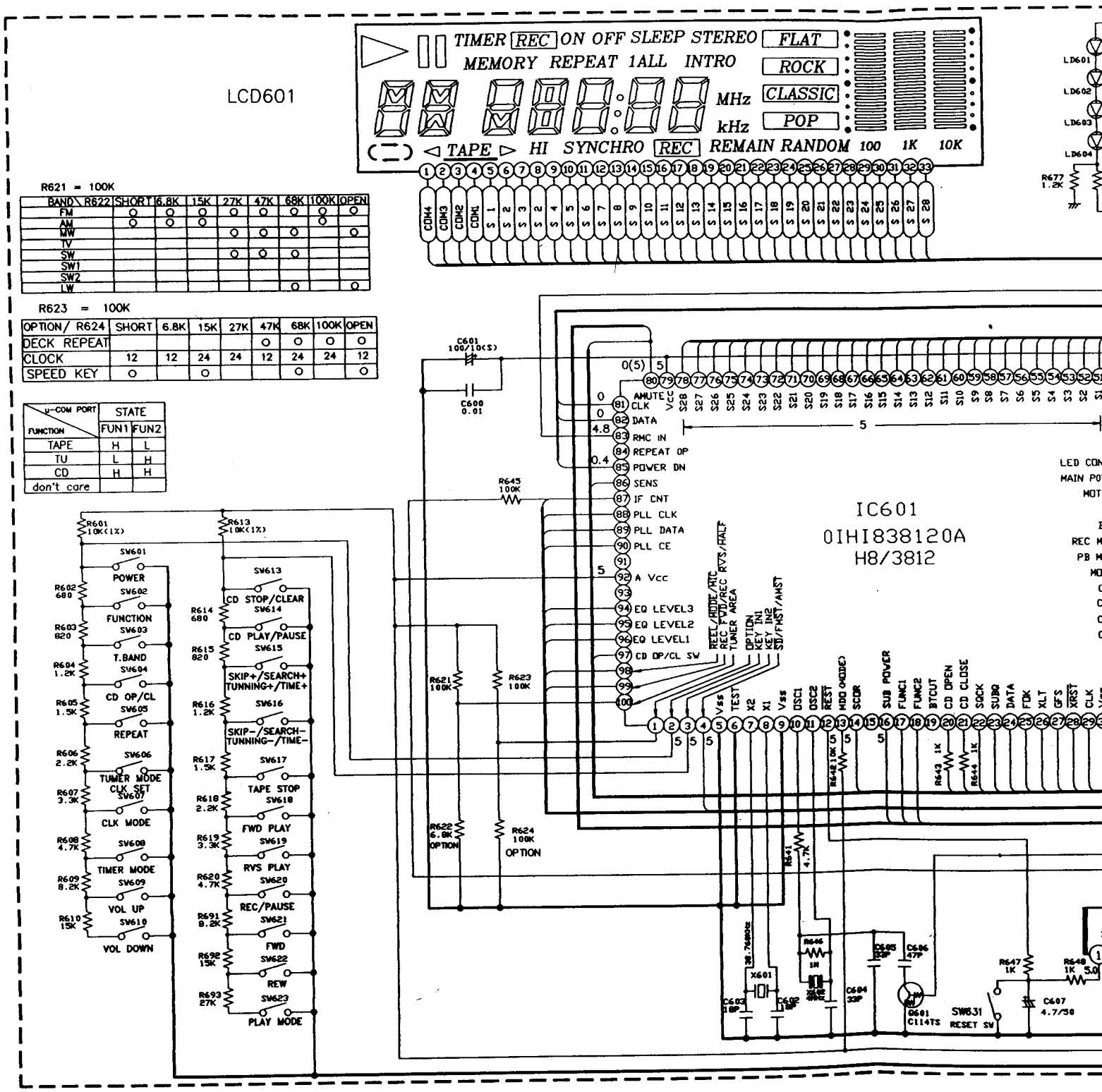

NOTES:
1. Resistance values are indicated in ohms unless otherwise specified (K=1,00
2. Capacitance values are shown in microfarads unless otherwise (P=MICRO-M
3. Schematic diagram for this model are subject to change for improvement with
4. Drawing No.: AS-0179K ('95. 8. 5/2nd)

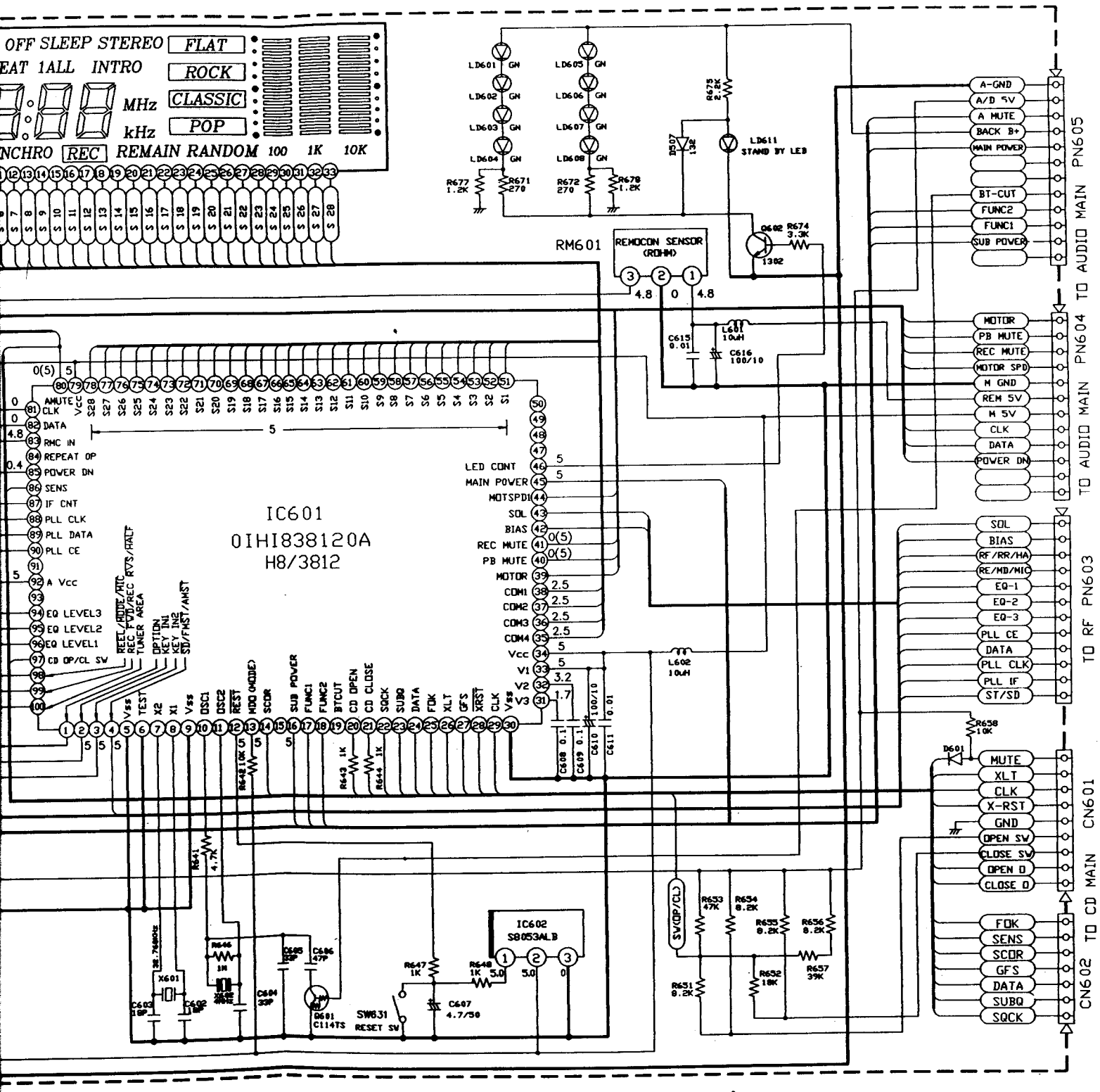

S: 1. Resistance values are indicated in ohms unless otherwise specified (K=1,000, M=1,000,000).
2. Capacitance values are shown in microfarads unless otherwise (P=MICRO-MICRO FARADS).
3. Schematic diagram for this model are subject to change for improvement without prior notice.
4. Drawing No.: AS-0179K ('95. 8. 5/2nd)

2. CDP SECTION

——— : FOCUS

——— : TRACK

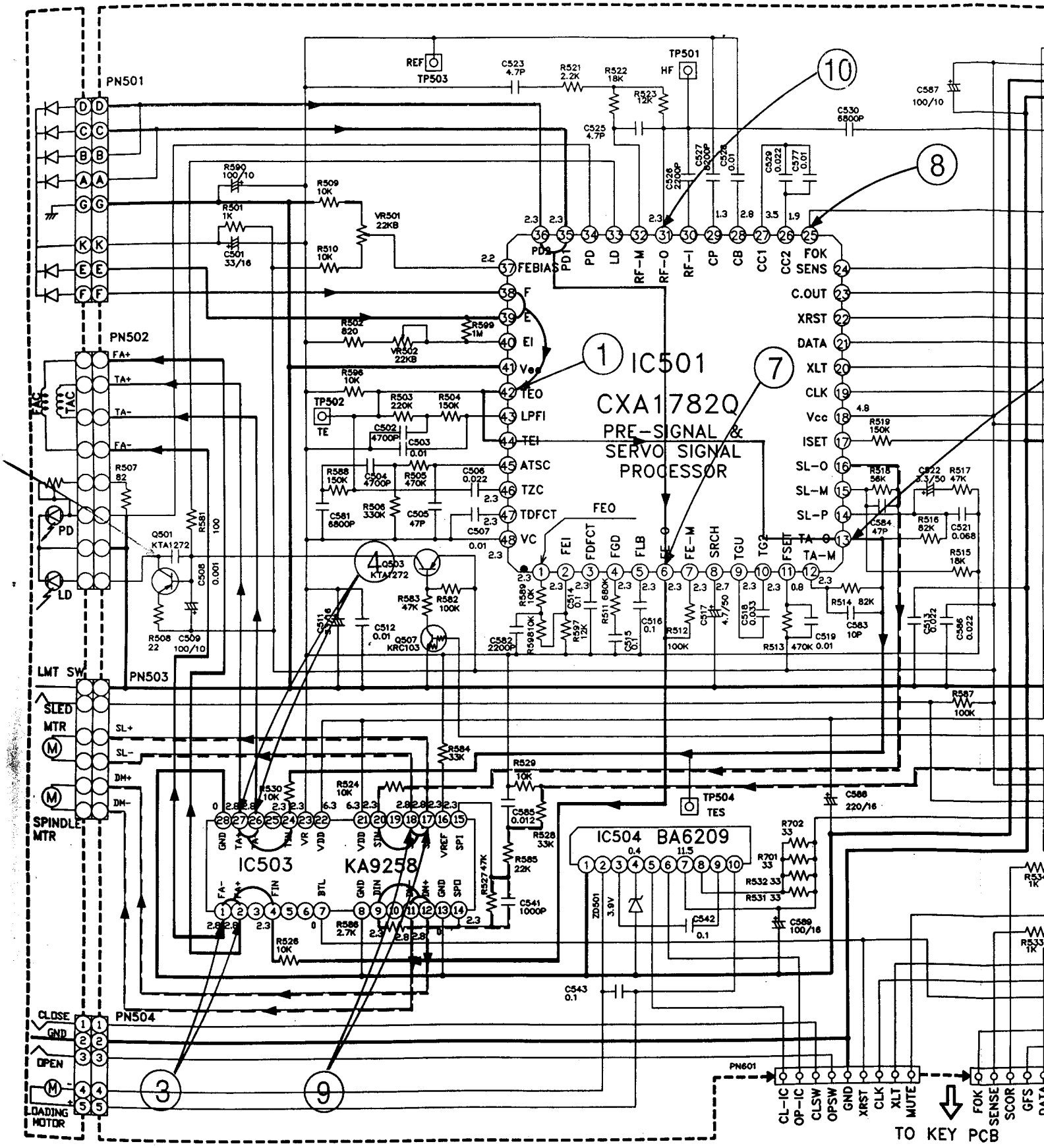

NOTES:
1. Resistance values are indicated in ohms unless ot
2. Capacitance values are shown in microfarads unle
3. Schematic diagram for this model are subject to ch
4. Drawing No.: AS-0179C ('95. 7. 12/1st)

——— : FOCUS SIGNAL - - - - - - - : SLIDE SIGNAL ——— : AUDIO SIGNAL

——— : TRACKING SIGNAL - - - - - - - : SPINDLE SIGNAL

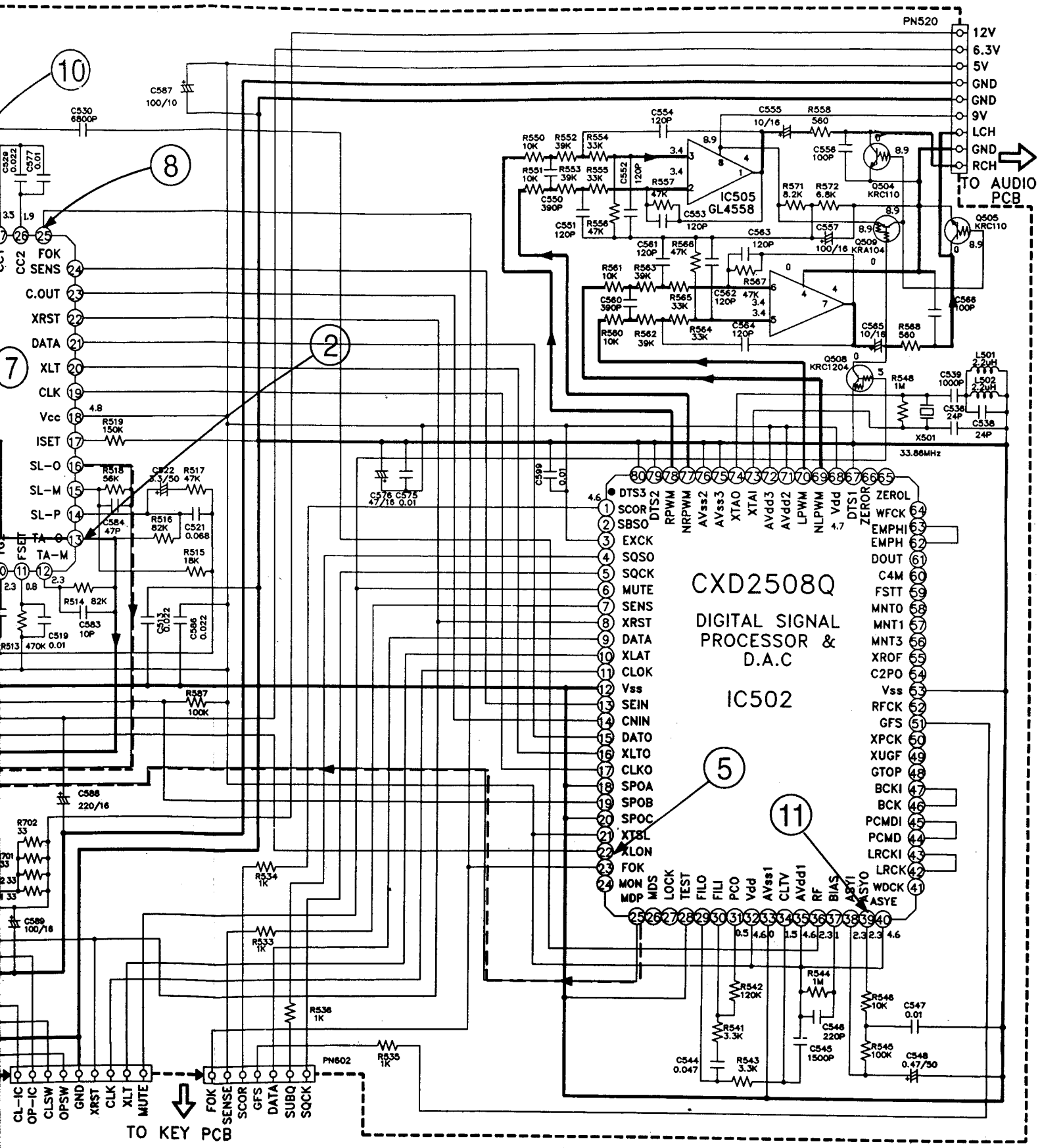

Resistance values are indicated in ohms unless otherwise specified (K=1,000, M=1,000,000).
Capacitance values are shown in microfarads unless otherwise (P=MICRO-MICRO FARADS).
Schematic diagram for this model are subject to change for improvement without prior notice.
Drawing No.: AS-0179C ('95. 7. 12/1st)

3. AUDIO SECTION

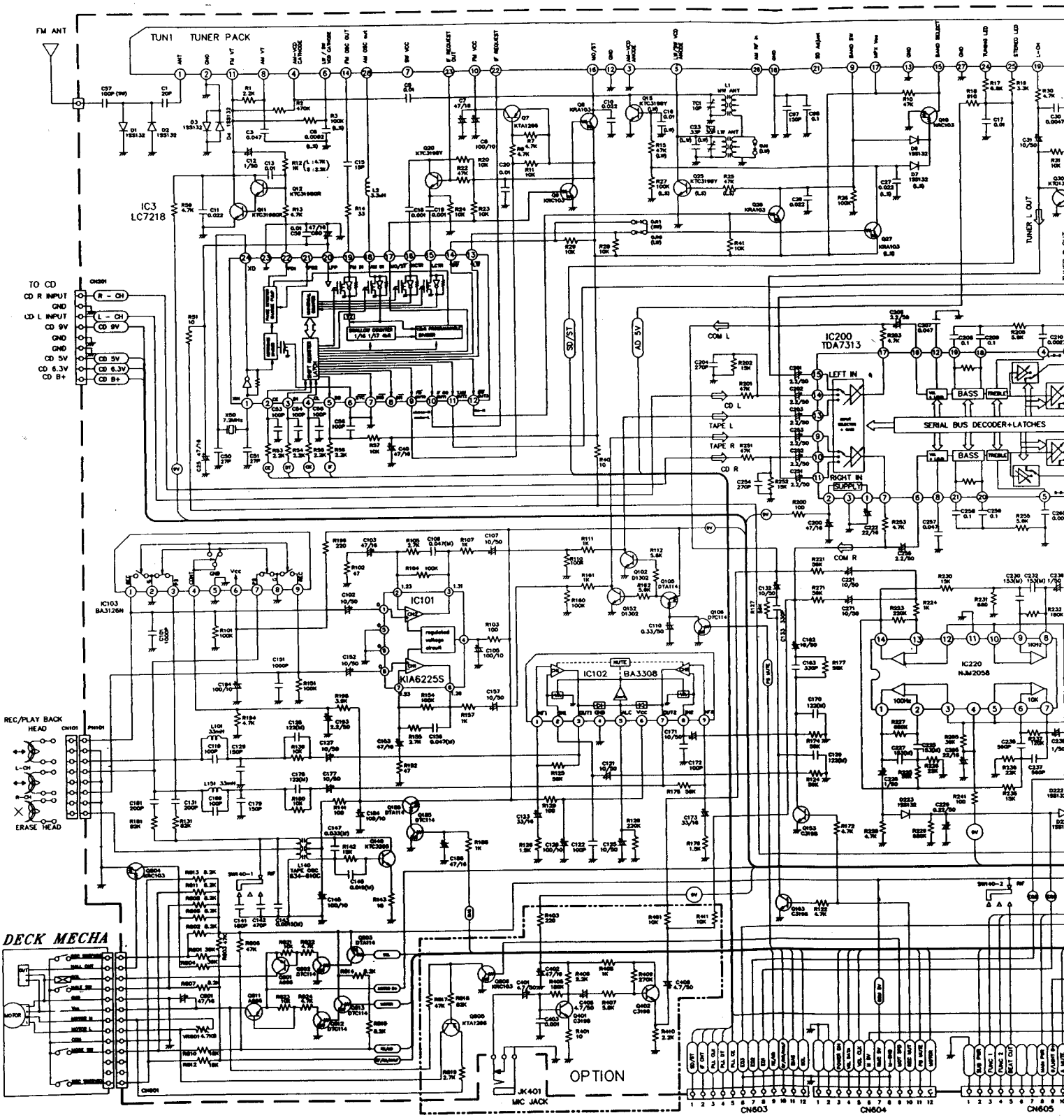

*VOLTAGE INDICATION
1.FM , ( )AM(MW)
2.TAPE PLAY
3.* TAPE REC

* ⇨ SIGNAL LINE

NOTES:
1. Resistance values are indicated in ohms unless otherwise specified (K=1,000, M=1,000,
2. Capacitance values are shown in microfarads unless otherwise (P=MICRO-MICRO FAR
3. Schematic diagram for this model are subject to change for improvement without prior no
4. Drawing No.: AS-0179A ('95. 8. 5/2nd)

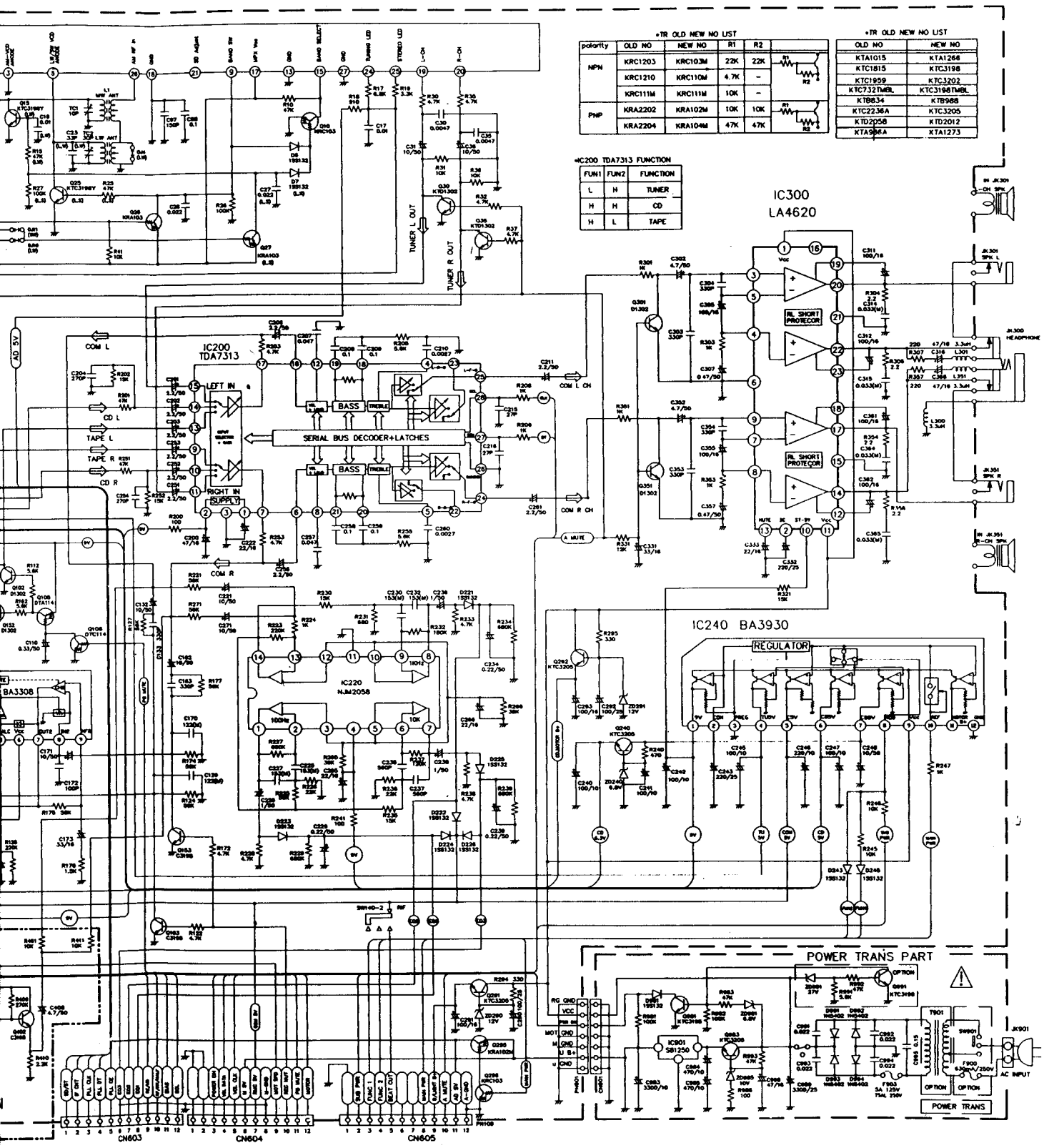

•TR OLD NEW NO LIST

polarity	OLD NO	NEW NO	R1	R2
NPN	KRC1203	KRC103M	22K	22K
	KRC1210	KRC110M	4.7K	–
	KRC111M	KRC111M	10K	–
PNP	KRA2202	KRA102M	10K	10K
	KRA2204	KRA104M	47K	47K

•TR OLD NEW NO LIST

OLD NO	NEW NO
KTA1015	KTA1266
KTC1815	KTC3198
KTC1959	KTC3202
KTC732TMBL	KTC3198TMBL
KTB634	KTB988
KTC2236A	KTC3205
KTD2058	KTD2012
KTA966A	KTA1273

•IC200 TDA7313 FUNCTION

FUN1	FUN2	FUNCTION
L	H	TUNER
H	H	CD
H	L	TAPE

es are indicated in ohms unless otherwise specified (K=1,000, M=1,000,000).
lues are shown in microfarads unless otherwise (P=MICRO-MICRO FARADS).
ram for this model are subject to change for improvement without prior notice.
S-0179A ('95. 8. 5/2nd)

WIRING DIAGRAM

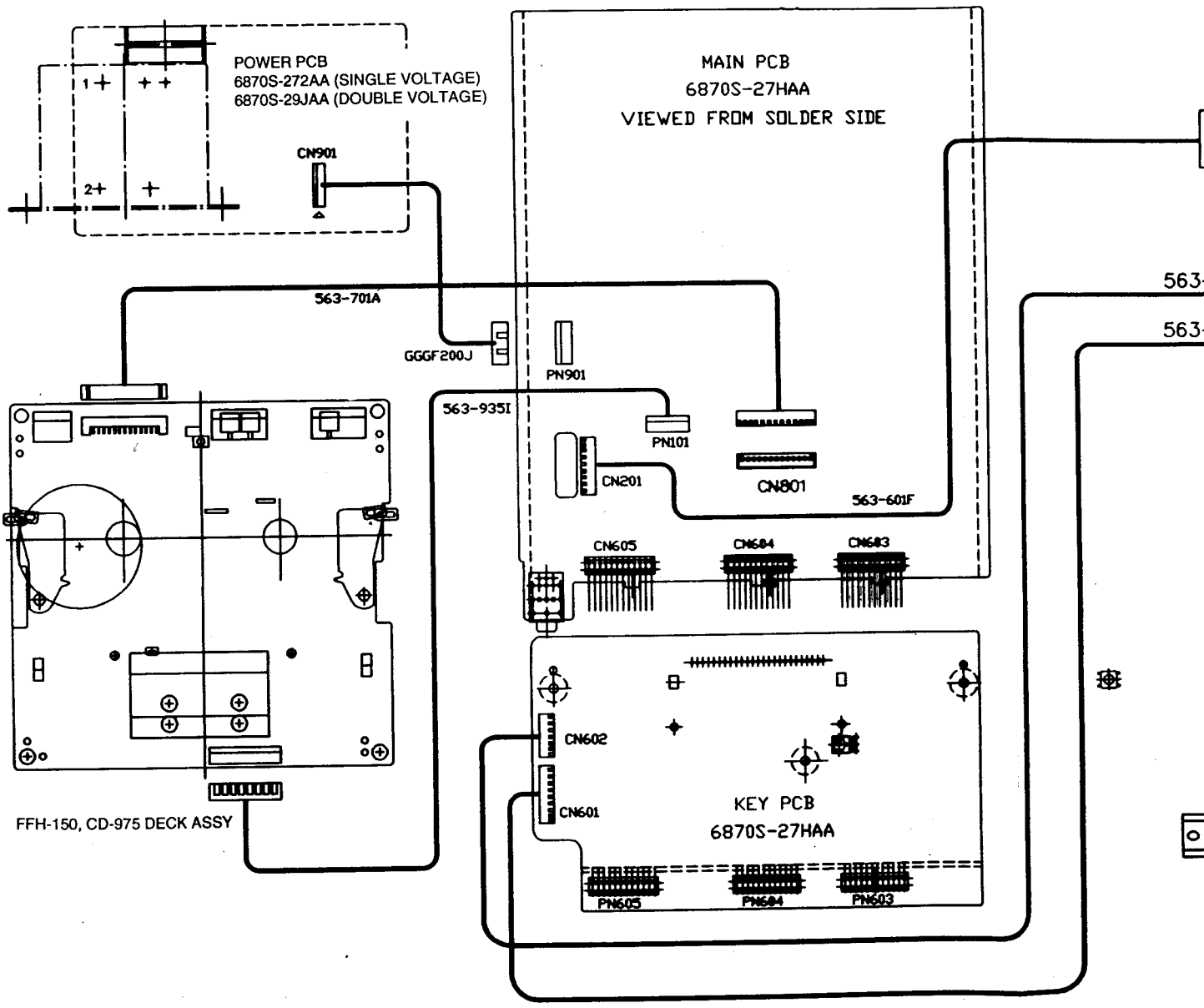

NOTES: 1. Wiring diagram for this model are subject to change for improve
2. Drawing No.: AS-0179D ('95. 7. 25/1st)

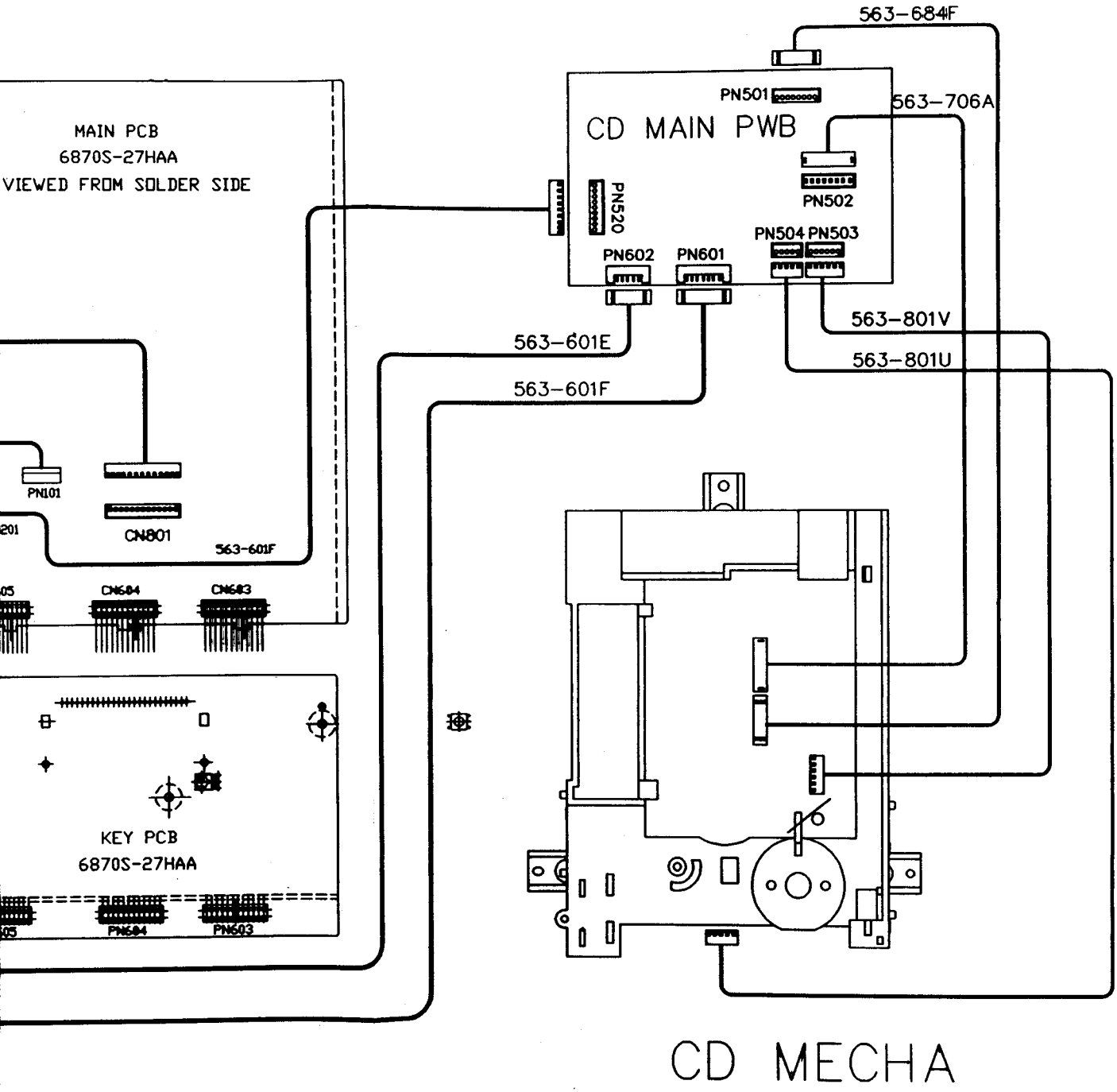

NOTES: 1. Wiring diagram for this model are subject to change for improvement without prior notice.
2. Drawing No.: AS-0179D ('95. 7. 25/1st)

10. EXPLODED VIEW & PARTS LIST

1. FRONT CASE SECTION

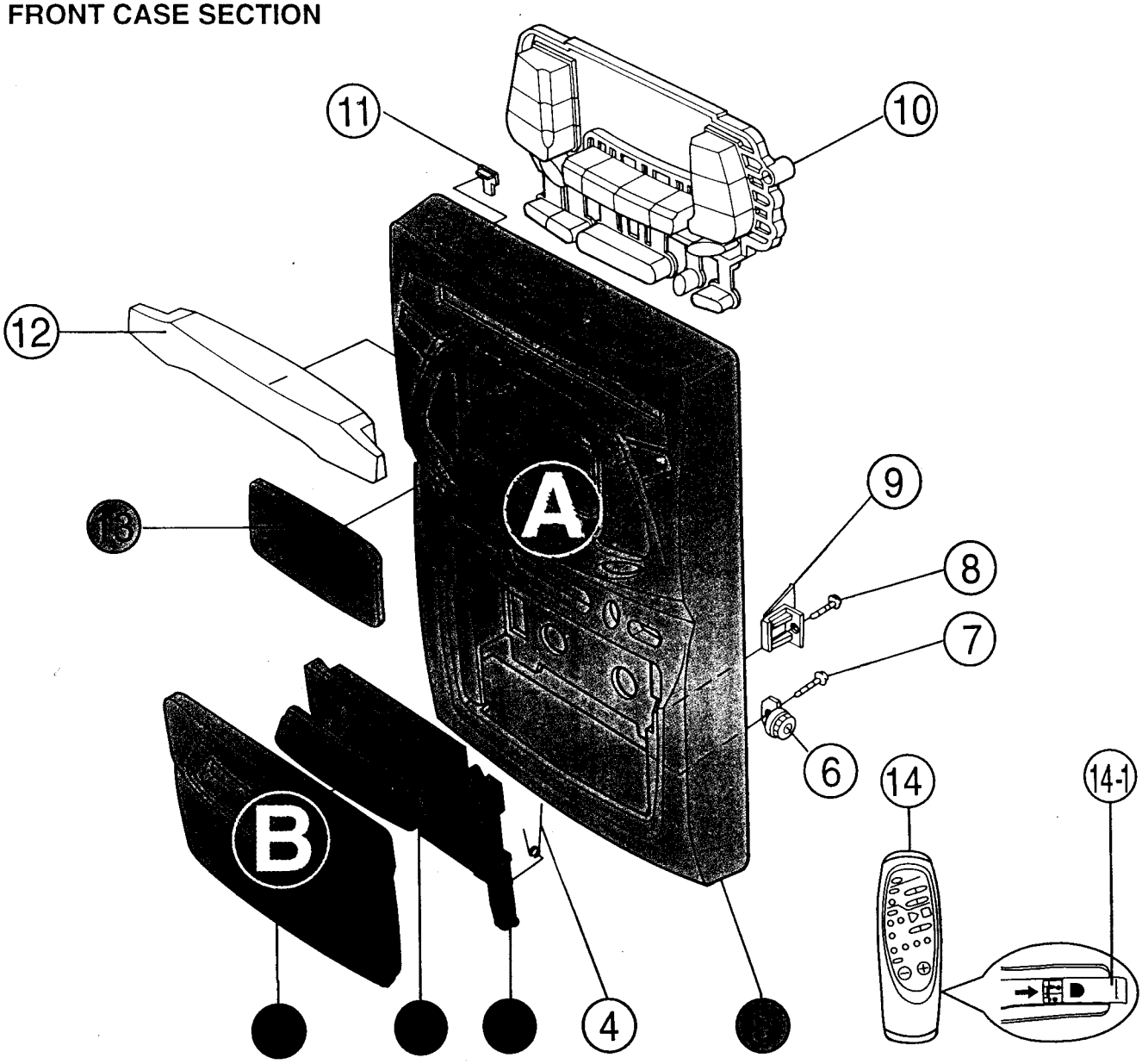

(1) Assembly Parts

Ref. No.	Part No.	Description
A	3111SU0975?	FRONT CASE ASS'Y(5+13) (FOR GOLDSTAR)
	3111SU0975?	FRONT CASE ASS'Y(5+13) (FOR EXPERT)
B	3581S-0975A	DOOR CST ASS'Y(1-3) (FOR GOLDSTAR)
	3581S-0975D	DOOR CST ASS'Y(1-3) (FOR EXPERT)

(2) Individual Parts

Ref. No.	Part No.	Description
1	3580S-0975A	DOOR CST
2	3790S-0976A	WINDOW CST
3	221-976A	COVER DOOR(FOR GOLDSTAR)
	221-976D	COVER DOOR(FOR EXPERT)
4	442-085E	SPRING DOOR EJECT
5	3110S-0975A	FRONT CASE
6	444-115A	DAMPER ASS'Y
7	353-025K	SCREW 3X12
8	353-025K	SCREW 3X12
9	384-535A	GUIDE EJECT ASS'Y
10	4940S-0975A	KNOB KEY
11	463-975A	LENS STAND-BY
12	3580S-0976A	DOOR CD TRAY
13	3790S-0975A	WINDOW LCD
14	6710S-D001A	REMOTE CONTROLLER WITH COVER (FOR GOLDSTAR)
	6710S-D001D	REMOTE CONTROLLER WITH COVER (FOR EXPERT)
14-1	221-180B	COVER BATTERY

2. CDP SECTION

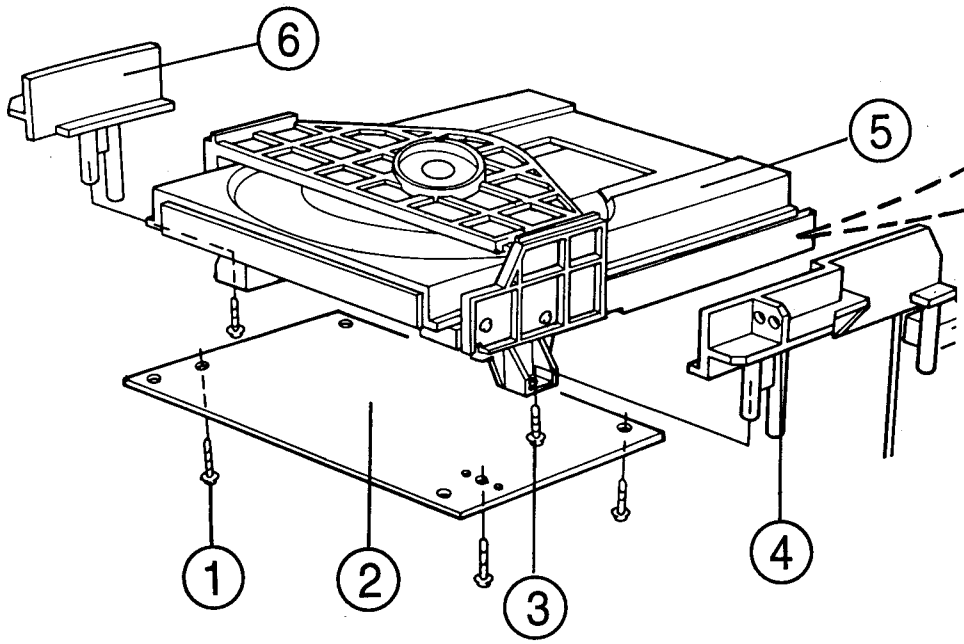

Ref. No.	Part No.	Description
1	353-025K	Screw 3 x 12
2	6871S-256BA	CD PCB Ass'y
3	353-025K	Screw 3 x 12
4	3140S-0976A	Chassis M/D-R
5	411-044K	Mechanism Ass'y (CDM-X208, KSM-2101ADM)
6	3140S-0975A	Chassis M/D-L

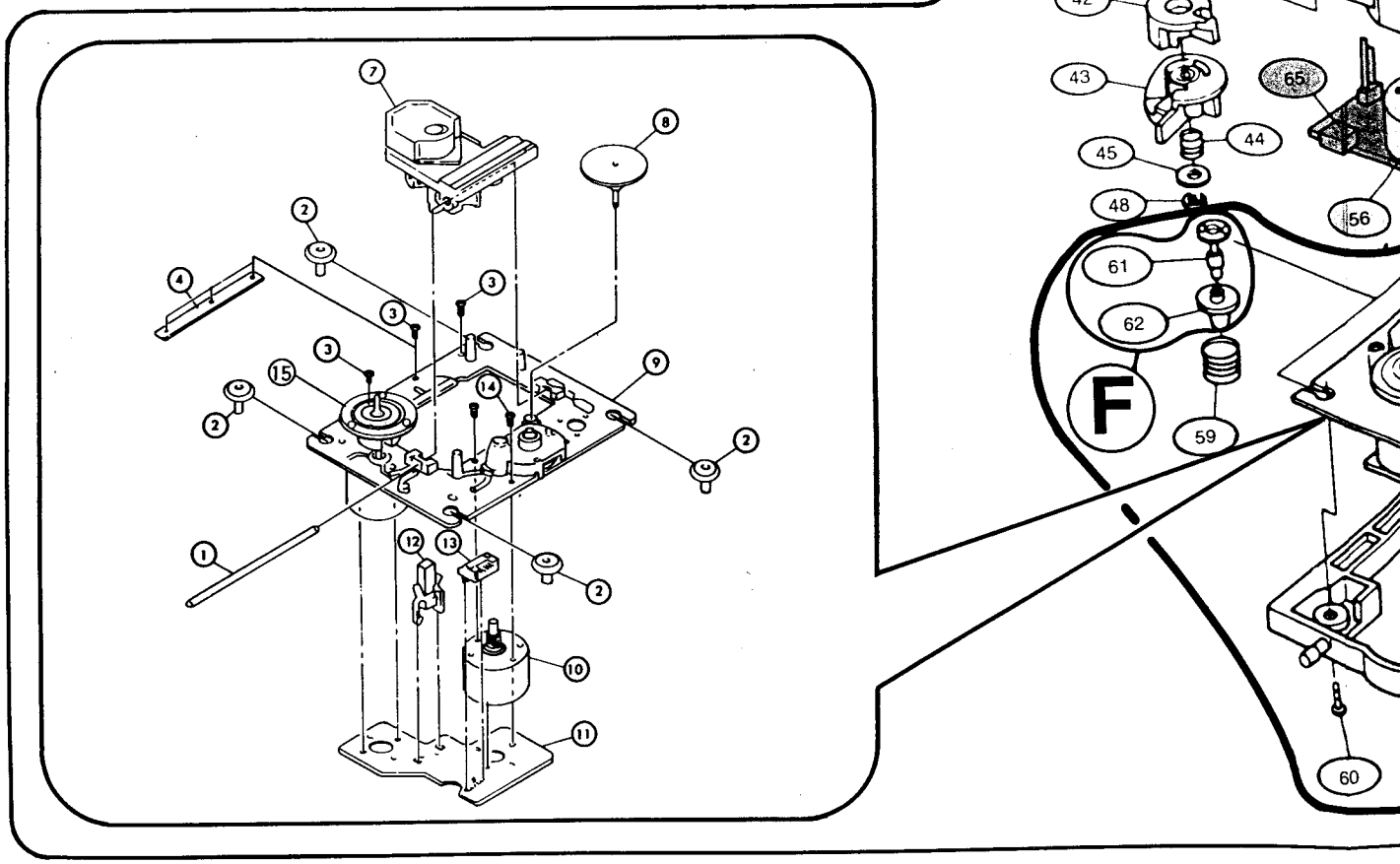

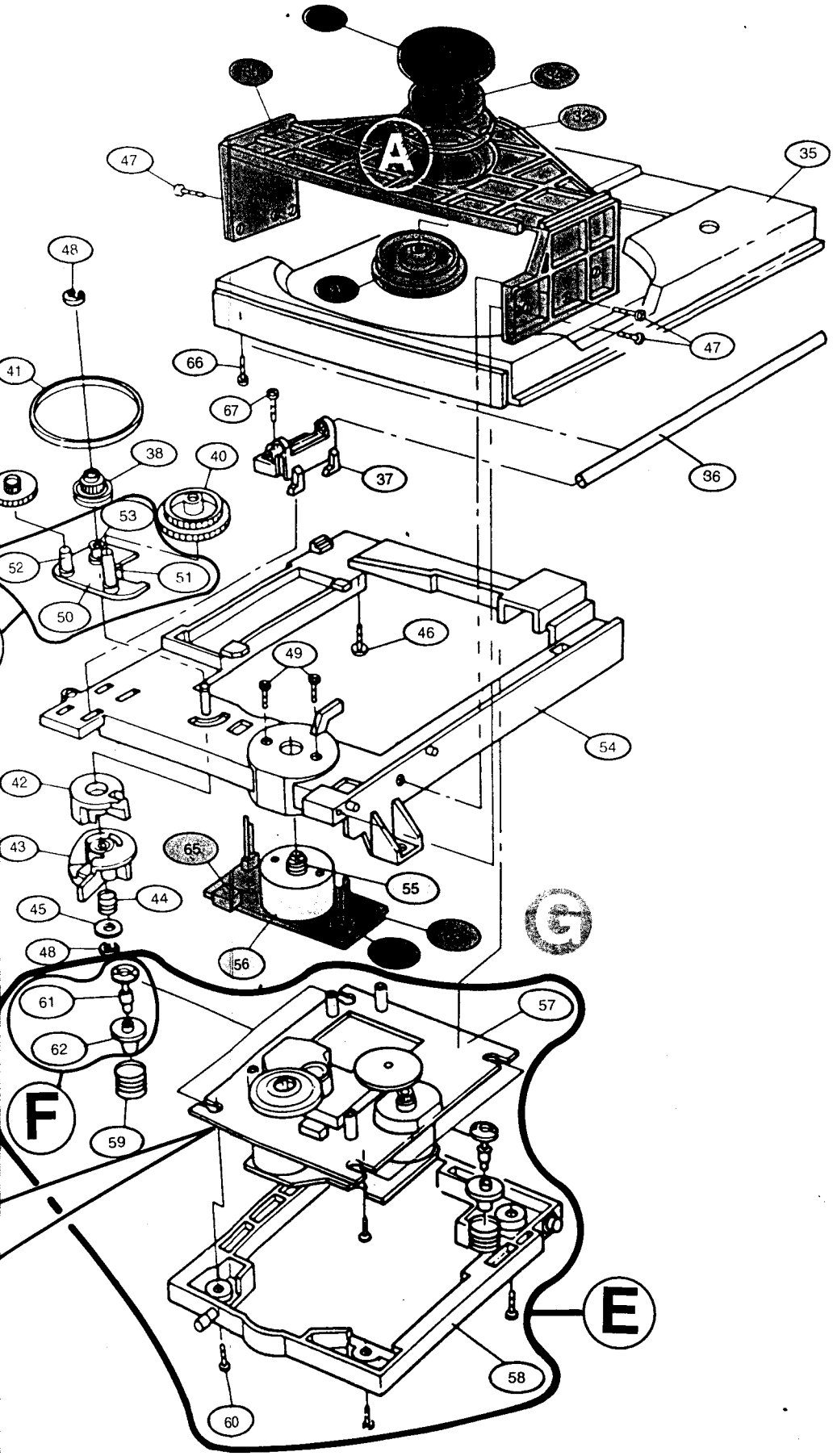

Ref. No.	Part No.	Description
A	322-321A	Supporter Clamp Ass'y
B	318-317A	Tray Disc Ass'y
C	252-252A	Plate Scale Ay
D	414-043A	Motor Ay
E	225-228F	Base, Pick-up Ay
F	322-324A	Supporter Spring Ay
G	6870S-158AA	PWB Ay
1	88S-0088	Slide Shaft
2	88S-0089	Insulator
3	88S-0090	Screw 2 x 5
4	88S-0091	Sub Plate
5	-	Not Used
6	-	Not Used
7	88S-0094	P.U. KSS-210A
8	88S-0095	Gear (A)
9	88S-0096	TT Chassis Ay
10	88S-0097	Motor Gear Ay
11	88S-0098	Motor Base
12	88S-0099	Leaf Switch
13	88S-0100	Connector
14	88S-0101	Screw 2 x 3
15	88S-0126	Turn Table
16~29	-	Not Used
30	322-322A	Supporter
31	327-013A	Clamp Disc
32	384-064A	Guide Magnet
33	221-527A	Cover Magnet
34	524-012A	Cover Clamp Magnet
35	318-318A	Tray Disc
36	423-423A	Shaft Loading
37	384-384A	Guide Shaft
38	435-435A	Gear Pulley
39	435-436A	Gear Middle
40	435-437A	Gear Loading
41	451-145U	Belt Counter
42	374-374A	Cam Ay Up
43	374-375A	Cam Ay Down
44	442-778A	Spring Com
45	354S354A	Washer Plate
46	353S353B	Screw
47	353S353C	Screw
48	345S345A	Ring-E
49	353S353F	Screw
50	252-253A	Plate Scale Loading
51	356-356A	Pin Pulley
52	356-357A	Pin Middle
53	341-341A	Bushing Pulley
54	225-225A	Base Loading Ay
55	432-432A	Pulley Motor
56	414-044A	Motor (RF500TB-14415;MABUCHI)
57	411-045E	Mecha Ay (KSM-2101ADM)
58	225-229A	Base Pick-up
59	442-717A	Spring
60	353S353A	Screw
61	322-323A	Supporter Spring
62	477-106A	Rubber
63	6870S-159AA	PWB Loading Ay
64	558-041A	S/W Special (MSW18020MVLO)
65	563E010A	Connector Ay Wafer (JST S5B-PH (5P))
66	353S353D	Screw
67	353S353E	Screw

3. DECK SECTION

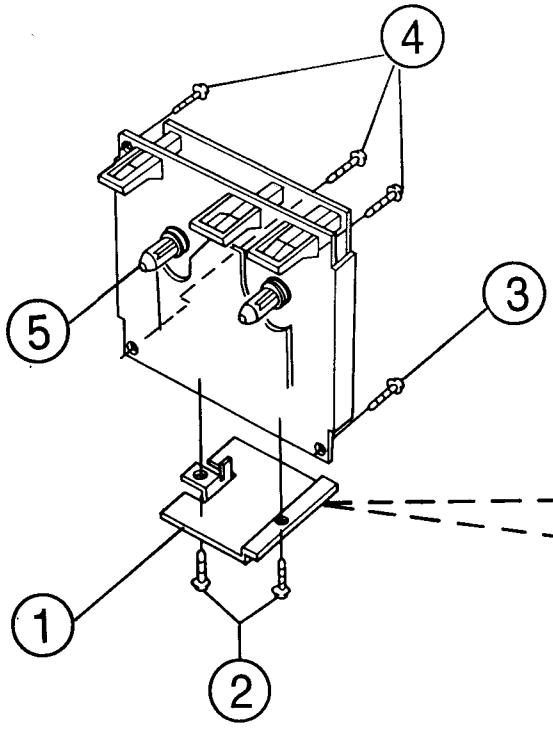

Ref. No.	Part No.	Description
1	256-976A	PLATE SHIELD DECK
2	353-022K	SCREW 2X3
3	353-025K	SCREW 3X12
4	353-025K	SCREW 3X12
5	419-505A	DECK MECHANISM ADR-2140TR

Ref. No.	Part No.	Description
A	419-505A	ADR-2140TR/CD-975
B	99S-0578	HEAD ASS'Y
C	99S-0580	MOTOR+PULLEY ASS'Y (17+79)
9	99S-0509	BRACKET HEAD/11106-00650A
10	99S-0510	GEAR HEAD/11128-00740AA
15	99S-0515	PULLEY F.W F/11145-00570A
16	99S-0516	PULLEY F.W R/11145-00580A
17	99S-0517	PULLEY MOTOR/11145-00590
22	99S-0522	GEAR DIR./11128-00750AA
23	99S-0523	ARM PINCH F/11102-01040AA
24	99S-0524	ARM PINCH R/11102-01050AA
36	99S-0536	SHAFT PINCH/11150-00130EA
44	99S-0544	SPRING DIR./51267-03036XA
57	99S-0557	WASHER PLAIN/51000-02302B
63	99S-0563	BELT SUB/51428-03411BB
64	99S-0564	BELT MAIN/51428-06905AA
70	99S-0570	ROLLER PINCH/11147-00160F
74	99S-0574	SW DETECT/70016-04001AA
76	99S-0576	SOLENOID/79840-00005AA
77	99S-0577	HEAD R.P/71486-04044ZA
79	99S-0579	MOTOR/70620-01602WA

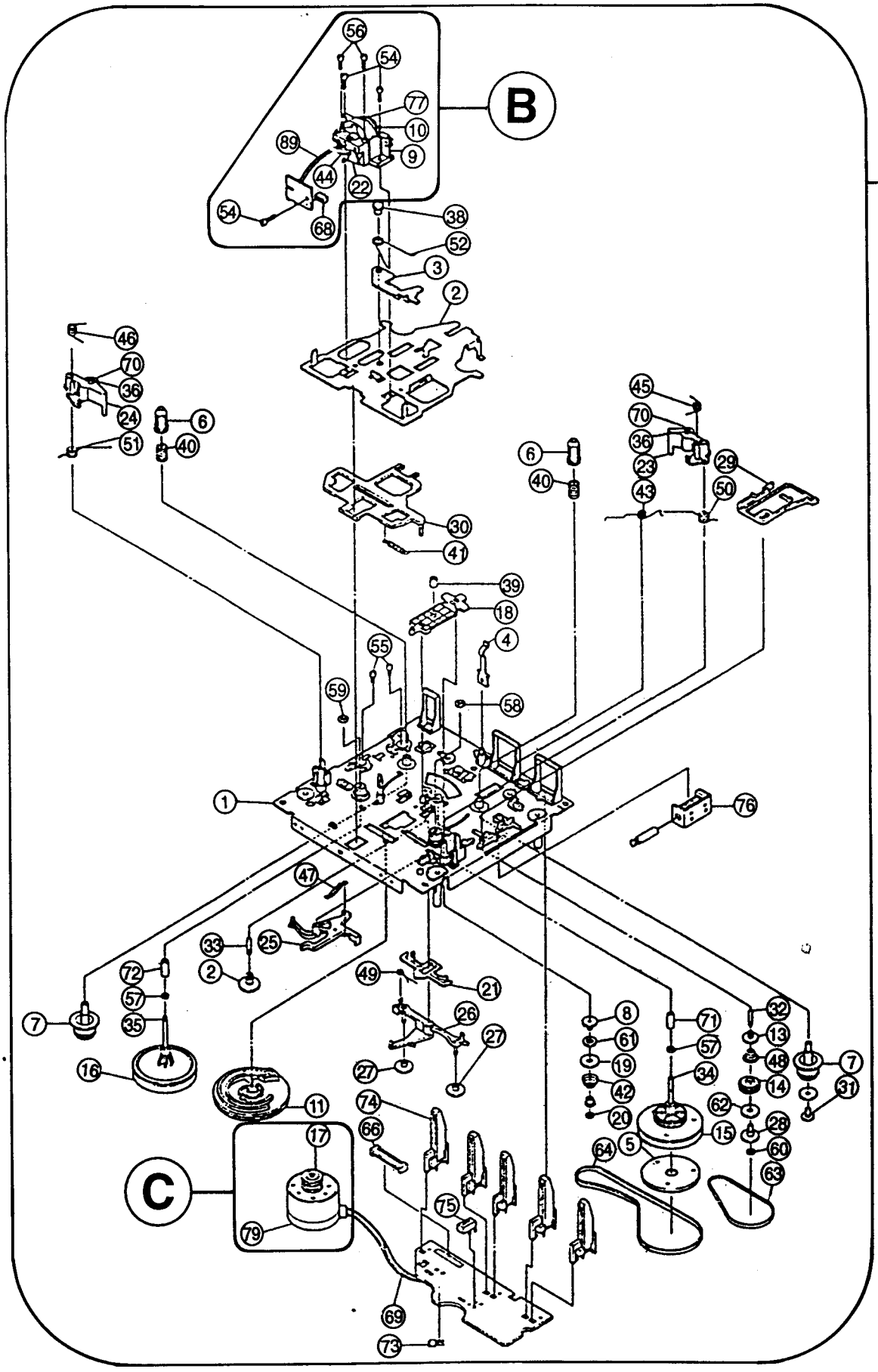
A
B
C
56
54
77
10
9
89
44
22
54
68
38
52
3
2
46
70
36
24
51
6
40
45
70
36
23
29
43
50
6
40
30
41
39
18
4
55
59
58
1
76
47
33
25
2
72
57
35
7
16
49
21
26
27
27
8
61
19
42
20
71
57
34
32
13
48
14
62
28
60
63
7
31
15
5
64
11
74
66
17
79
75
69
73

4 . CIRCUIT SECTION

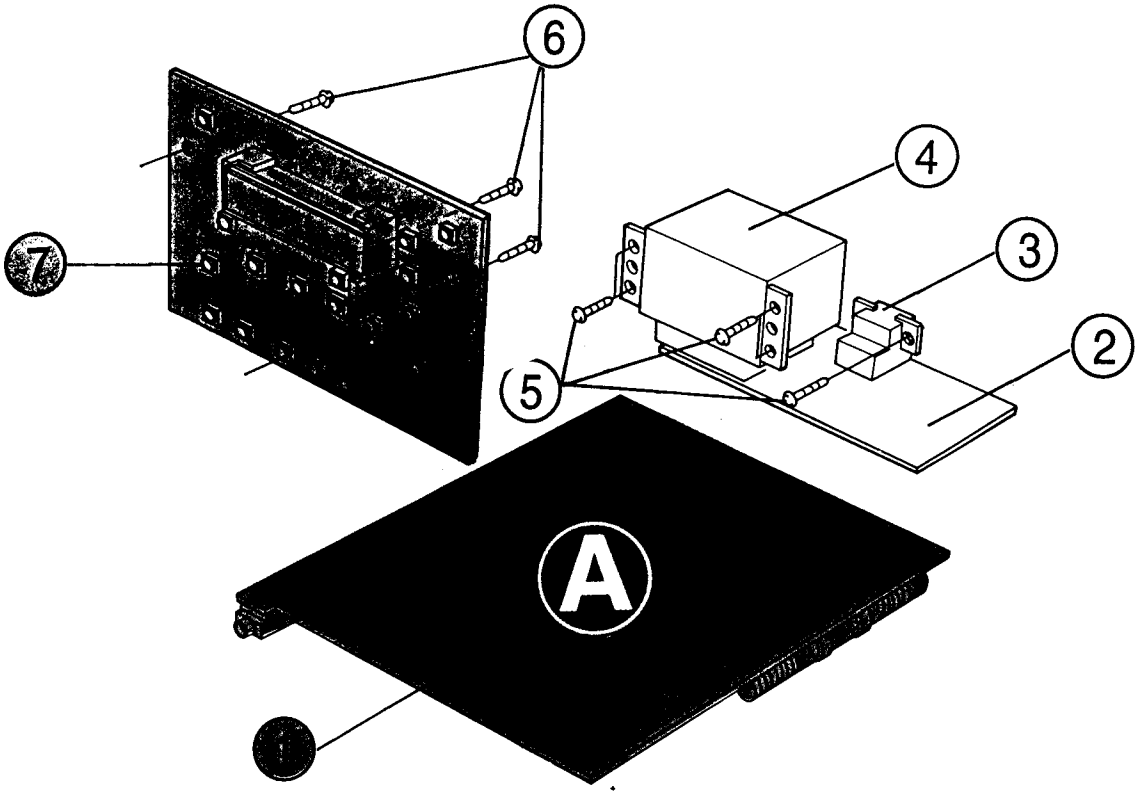

(1) Assembly Parts

Ref. No.	Part No.	Description
A	6871S-27HAA	TTL PCB ASS'Y (1+7) (2BAND, 12HR,100kHz,10kHz)
	6871S-27HAC	TTL PCB ASS'Y (1+7) (2BAND, 24HR, 50kHz, 9kHz)
	6871S-27HSC	TTL PCB ASS'Y (1+7) (SW BAND, 12HR, 50kHz, 9kHz)
	6871S-27HLA	TTL PCB ASS'Y (1+7) (LW BAND, 24HR, 50kHz, 9kHz)

(2) Individual Parts

Ref. No.	Part No.	Description
1	6871SV27HAA	RF+MAIN PCB ASS'Y(2BAND)
	6871SV27HSA	RF+MAIN PCB ASS'Y(SW BAND)
	6871SV27HLA	RF+MAIN PCB ASS'Y(LW BAND)
2	6871S-272AC	POWER PCB ASS'Y(120V)
	6871S-272AB	POWER PCB ASS'Y(220V)
	6871S-272AD	POWER PCB ASS'Y(110-127V/220-240V)
	6871S-272AL	POWER PCB ASS'Y(230V)
3	577-008A	AC SOCKET (NON-POLARIZED)
	577-008G	AC SOCKET (POLARIZED)
	577-008J	AC SOCKET (NON-POLARIZED)
4	6170S-003YS	POWER TRANS
5	353-025K	SCREW 3X12
6	353-025K	SCREW 3X12
7	6871SY27HAA	KEY PCB ASS'Y (2BAND, 12HR,100kHz,10kHz)
	6871SY27HAG	KEY PCB ASS'Y (2BAND, 24HR, 50kHz, 9kHz)
	6871SY27HAH	KEY PCB ASS'Y (SW BAND, 12HR, 50kHz, 9kHz)
	6871SY27HAC	KEY PCB ASS'Y (LW BAND, 24HR, 50kHz, 9kHz)

5. REAR CASE SECTION

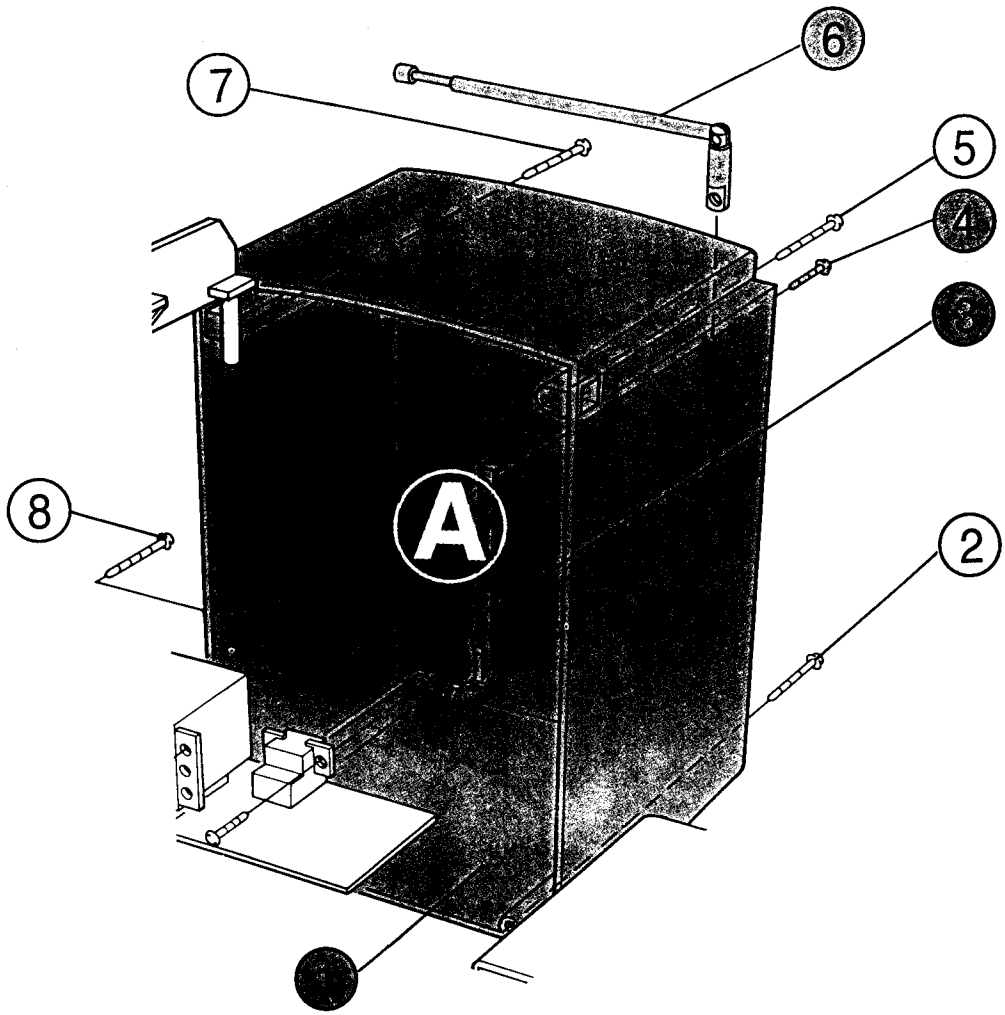

(1) Assembly Parts

Ref. No.	Part No.	Description
A	3111SU0976A	REAR CASE ASS'Y(1+3+4+6)

(2) Individual Parts

Ref. No.	Part No.	Description
1	3110S-0976A	REAR CASE
2	353-025N	SCREW 3X24
3	256-975A	PLATE ROD ANTENNA
4	353-025K	SCREW 3X12
5	353-025N	SCREW 3X24
6	532-203A	ROD ANTENNA
7	353-025N	SCREW 3X24
8	353-025N	SCREW 3X24

6. SPEAKER SECTION

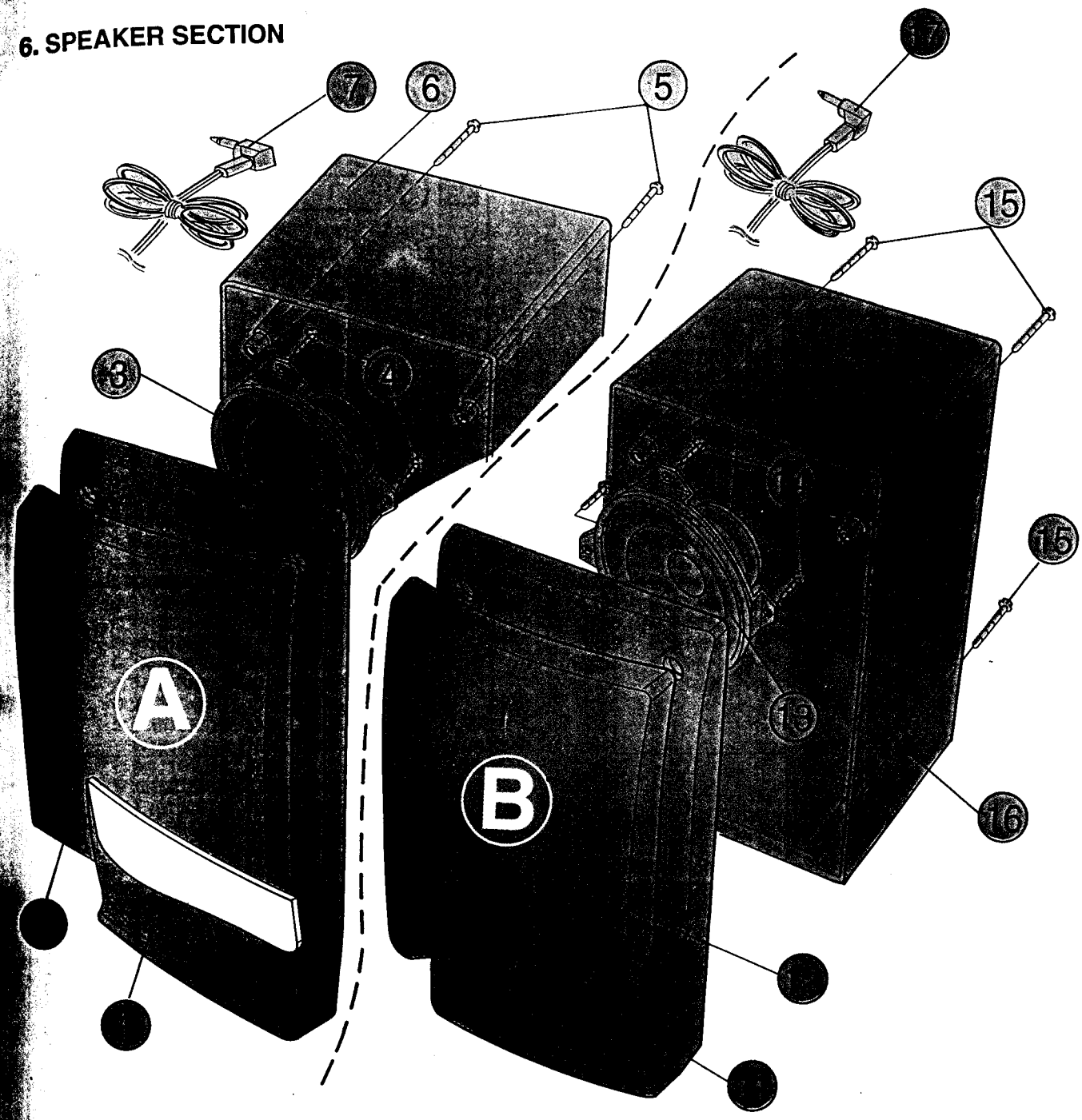

1) Assembly Parts

Ref. No.	Part No.	Description
A	3111S-0977M	Speaker Ass'y-L (1~7)
	3111S-0977N	Speaker Ass'y-L (1~7)-LGEUK ONLY)
B	3111S-0978M	Speaker Ass'y-R (11~17)
	3111S-0978N	Speaker Ass'y-R (11~17)-LGEUK ONLY)

2) Individual Parts

Ref. No.	Part No.	Description
1	3110S-0977A	SPK Front Case-L
2	224-930A	Grille Jersey-L
3	541-887F	Speaker 100mm, 3.2Ω
4	353-025K	Screw 3 x 12
5	353-025N	Screw 3 x 24
6	3110S-0979A	SPK Rear Case
7	564-004J	Speaker Cord (2M)
8-10	-	Not Used
11	3110S-0978A	SPK Front Case-R
12	224-930B	Grille Jersey-R
13	541-887F	Speaker 100mm, 3.2Ω
14	353-025K	Screw 3 x 12
15	353-025N	Screw 3 x 24
16	3110S-0979A	SPK Rear Case
17	564-004J	Speaker Cord (2M)

7. POWER CORDS

● For U.K.

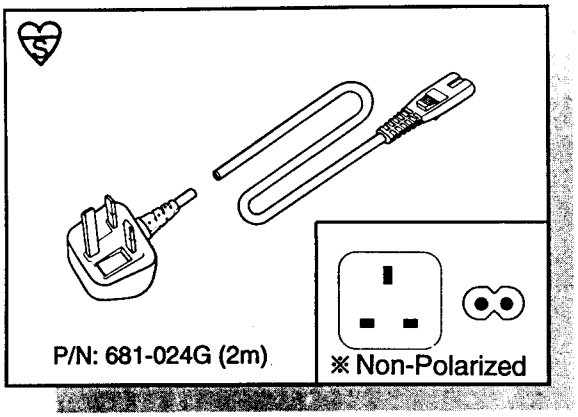

● For Australia

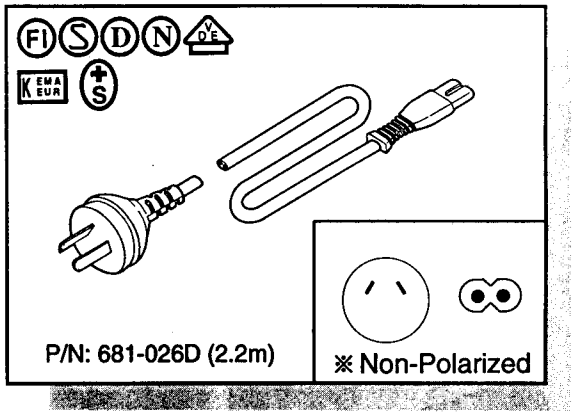

● For General

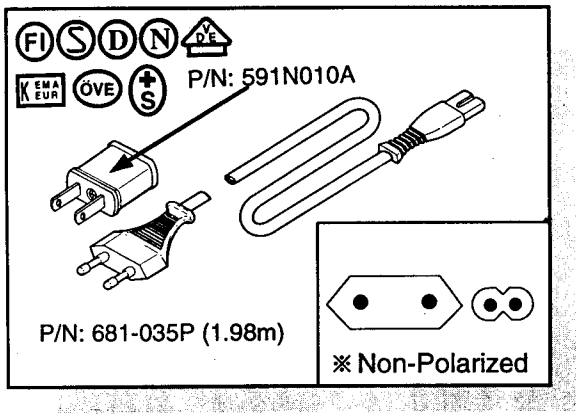

● For Japan

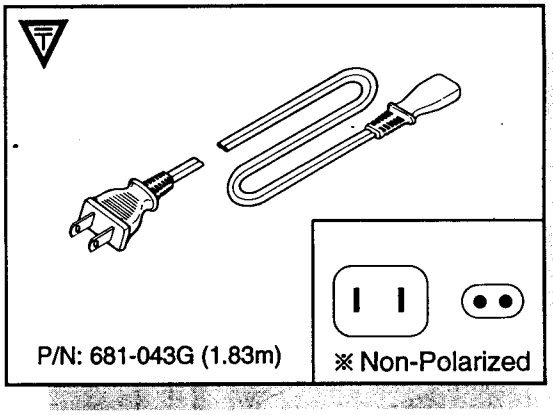

● For Canada

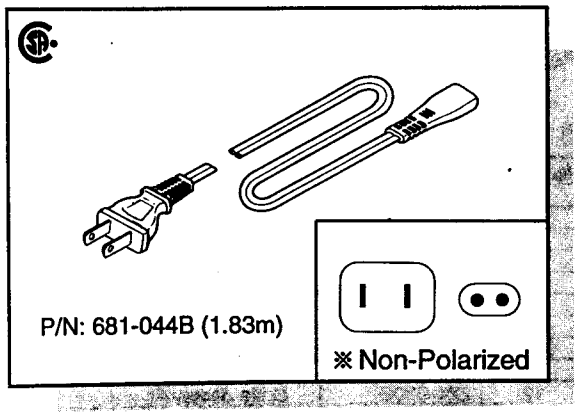

● For U.S.A. and Canada

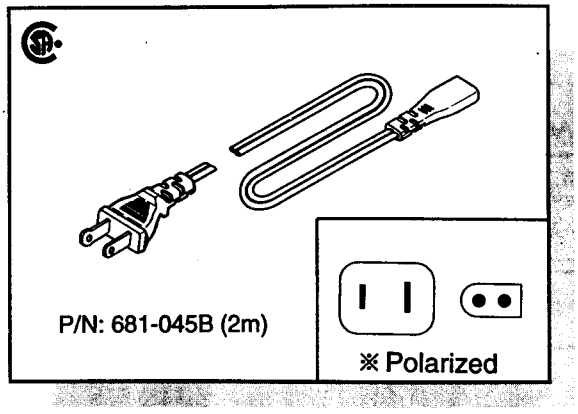

11. REPLACEMENT PARTS LIST

NOTE: 1. Parts marked with "⚠" are important for maintaining the safety of the set. Be sure to replace these parts with specified ones for maintaining the safety and performance of the set.
2. Option :

CAPACITOR

REF. NO.	PART NO.	DESCRIPTION
C1	0CX2000K418	20P 50V J NPO TA26
C10	0CN2230H948	0.022UF 25V Z F TA26
C101	0CN1020K518	1000P 50V K B TA26
C102	0CE1066K618	10M SMS 50V M FM5 TP(5)
C103	0CE4766F618	47M SMS 16V M FL TP(5)
C105	0CE1076D618	100M SMS 10V M FM5 TP(5)
C106	0CQ4731N409	0.047U 100V J POLY TP
C107	0CE1066K618	10M SMS 50V M FM5 TP(5)
C11	0CN2230H948	0.022UF 25V Z F TA26
C110	0CE3346K618	0.33M SMS 50V M FL TP(5)
C119	0CN1010K518	100P 50V K B TA26
C12	0CE1056K618	1.0M SMS 50V M FL TP(5)
C120	0CQ1221N409	0.0012U 100V J POLY TP
C121	0CE1066K618	10M SMS 50V M FM5 TP(5)
C122	0CN1010K518	100P 50V K B TA26
C123	0CE3366F618	33M SMS 16V M FL TP(5)
C125	0CE1066K618	10M SMS 50V M FM5 TP(5)
C126	0CE1076D618	100M SMS 10V M FM5 TP(5)
C127	0CE1066K618	10M SMS 50V M FM5 TP(5)
C128	0CQ1221N409	0.0012U 100V J POLY TP
C129	0CN1510K518	150P 50V K B TA26
C13	0CN1030F678	0.01M 16V M Y TA26
C131	0CN2010K518	200PF 50V K B TA26
C132	0CE1066K618	10M SMS 50V M FM5 TP(5)
C133	0CN3310K518	330P 50V K B TA26
C141	0CN1810K518	180P 50V K B TA26
C142	0CN4710K518	470P 50V K B TA26
C143	0CQ1521N409	0.0015U 100V J POLY TP
C145	0CE1076D618	100M SMS 10V M FM5 TP(5)
C147	0CQ3331N409	0.033U 100V J POLY TP
C148	0CQ1531N409	0.015U 100V J POLY TP
C15	0CX1500K478	15P 50V J N750 TA26
C151	0CN1020K518	1000P 50V K B TA26
C152	0CE1066K618	10M SMS 50V M FM5 TP(5)
C153	0CE4766F618	47M SMS 16V M FL TP(5)
C156	0CQ4731N409	0.047U 100V J POLY TP
C157	0CE1066K618	10M SMS 50V M FM5 TP(5)
C169	0CN1010K518	100P 50V K B TA26
C17	0CN1030F678	0.01M 16V M Y TA26
C170	0CQ1221N409	0.0012U 100V J POLY TP
C171	0CE1066K618	10M SMS 50V M FM5 TP(5)
C172	0CN1010K518	100P 50V K B TA26
C173	0CE3366F618	33M SMS 16V M FL TP(5)
C177	0CE1066K618	10M SMS 50V M FM5 TP(5)
C178	0CQ1221N409	0.0012U 100V J POLY TP
C179	0CN1510K518	150P 50V K B TA26
C18	0CN1020K518	1000P 50V K B TA26
C181	0CN2010K518	200PF 50V K B TA26
C182	0CE1066K618	10M SMS 50V M FM5 TP(5)
C183	0CN3310K518	330P 50V K B TA26
C184	0CE1076D618	100M SMS 10V M FM5 TP(5)
C185	0CE4766F618	47M SMS 16V M FL TP(5)
C19	0CN1020K518	1000P 50V K B TA26
C193	0CE2256K618	2.2M SMS 50V M FL TP(5)
C194	0CE1076D618	100M SMS 10V M FM5 TP(5)
C20	0CN1030F678	0.01M 16V M Y TA26
C200	0CE4766F618	47M SMS 16V M FL TP(5)
C201	0CE2256K618	2.2M SMS 50V M FL TP(5)
C202	0CE2256K618	2.2M SMS 50V M FL TP(5)
C203	0CE2256K618	2.2M SMS 50V M FL TP(5)
C204	0CN2710K518	270P 50V K B TA26
C206	0CE2256K618	2.2M SMS 50V M FL TP(5)
C207	0CN4730K948	0.047UF 50V Z F TA26
C208	0CN1040K948	0.1UF 50V Z F TA26
C209	0CN1040K948	0.1UF 50V Z F TA26
C210	0CN2720F668	2700P 16V M X TA26
C211	0CE2256K618	2.2M SMS 50V M FL TP(5)
C215	0CX2700K478	27P 50V J N750 TA26
C216	0CX2700K478	27P 50V J N750 TA26
C221	0CE1066K618	10M SMS 50V M FM5 TP(5)
C222	0CE2266F618	22M SMS 16V M FM5 TP(5)
C225	0CQ1531N409	0.015U 100V J POLY TP
C226	0CE1056K618	1.0M SMS 50V M FL TP(5)
C227	0CQ1531N409	0.015U 100V J POLY TP
C229	0CE2246K618	0.22M SMS 50V M FM5 TP(5)
C230	0CQ1531N409	0.015U 100V J POLY TP
C232	0CQ1531N409	0.015U 100V J POLY TP
C234	0CE2246K618	0.22M SMS 50V M FM5 TP(5)
C235	0CN5610K518	560P 50V K B TA26
C236	0CE1056K618	1.0M SMS 50V M FL TP(5)
C237	0CN5610K518	560P 50V K B TA26
C238	0CE1056K618	1.0M SMS 50V M FL TP(5)
C239	0CE2246K618	0.22M SMS 50V M FM5 TP(5)
C240	0CE1076D618	100M SMS 10V M FM5 TP(5)
C241	0CE1076D618	100M SMS 10V M FM5 TP(5)
C242	0CE1076D618	100M SMS 10V M FM5 TP(5)
C243	0CE2276H618	220M SMS 25V FM5 TP(5)
C245	0CE1076D618	100M SMS 10V M FM5 TP(5)
C246	0CE2276D618	220UF SMS 10V M FL TP5
C247	0CE1076D618	100M SMS 10V M FM5 TP(5)
C248	0CE1066K618	10M SMS 50V M FM5 TP(5)
C25	0CE4766F618	47M SMS 16V M FL TP(5)
C251	0CE2256K618	2.2M SMS 50V M FL TP(5)
C252	0CE2256K618	2.2M SMS 50V M FL TP(5)
C253	0CE2256K618	2.2M SMS 50V M FL TP(5)
C254	0CN2710K518	270P 50V K B TA26
C256	0CE2256K618	2.2M SMS 50V M FL TP(5)
C257	0CN4730K948	0.047UF 50V Z F TA26
C258	0CN1040K948	0.1UF 50V Z F TA26
C259	0CN1040K948	0.1UF 50V Z F TA26
C26	0CN2230H948	0.022UF 25V Z F TA26
C260	0CN2720F668	2700P 16V M X TA26
C261	0CE2256K618	2.2M SMS 50V M FL TP(5)
C265	0CE2266F618	22M SMS 16V M FM5 TP(5)
C266	0CE2266F618	22M SMS 16V M FM5 TP(5)
C27	0CN2230H948	0.022UF 25V Z F TA26
C271	0CE1066K618	10M SMS 50V M FM5 TP(5)
C290	0CE1076H618	100M SMS 25V M FM5 TP(5)
C291	0CE1076F618	100M SMS 16V M FM5 TP(5)
C292	0CE1076H618	100M SMS 25V M FM5 TP(5)
C293	0CE1076F618	100M SMS 16V M FM5 TP(5)
C3	0CN4730K948	0.047UF 50V Z F TA26
C30	0CN4720F668	4700P 16V M X TA26
C302	0CE4756K618	4.7M SMS 50V M FL TP(5)
C303	0CN3310K518	330P 50V K B TA26
C304	0CN3310K518	330P 50V K B TA26
C305	0CE1076F618	100M SMS 16V M FM5 TP(5)
C307	0CE4746K618	0.47M SMS 50V M FL TP(5)

REF. NO.	PART NO.	DESCRIPTION
C31	0CE1066K618	10M SMS 50V M FM5 TP(5)
C311	0CE1076F618	100M SMS 16V M FM5 TP(5)
C312	0CE1076F618	100M SMS 16V M FM5 TP(5)
C314	0CQ3331N409	0.033U 100V J POLY TP
C315	0CQ3331N409	0.033U 100V J POLY TP
C316	0CE4766F618	47M SMS 16V M FL TP(5)
C331	0CE3366F618	33M SMS 16V M FL TP(5)
C332	0CE2276H618	220M SMS 25V FM5 TP(5)
C333	0CE2266F618	22M SMS 16V M FM5 TP(5)
C35	0CN4720F668	4700P 16V M X TA26
C352	0CE4756K618	4.7M SMS 50V M FL TP(5)
C353	0CN3310K518	330P 50V K B TA26
C354	0CN3310K518	330P 50V K B TA26
C355	0CE1076F618	100M SMS 16V M FM5 TP(5)
C357	0CE4746K618	0.47M SMS 50V M FL TP(5)
C36	0CE1066K618	10M SMS 50V M FM5 TP(5)
C361	0CE1076F618	100M SMS 16V M FM5 TP(5)
C362	0CE1076F618	100M SMS 16V M FM5 TP(5)
C364	0CQ3331N409	0.033U 100V J POLY TP
C365	0CQ3331N409	0.033U 100V J POLY TP
C366	0CE4766F618	47M SMS 16V M FL TP(5)
C40	0CE4766F618	47M SMS 16V M FL TP(5)
C5	0CN1030F678	0.01M 16V M Y TA26
C50	0CX2700K478	27P 50V J N750 TA26
C501	0CE3366F618	33M SMS 16V M FL TP(5)
C502	0CN4720F668	4700P 16V M X TA26
C503	0CN1030F678	0.01M 16V M Y TA26
C504	0CN4720F668	4700P 16V M X TA26
C505	0CX4700K408	47P 50V J SL TA26
C506	0CN2230H948	0.022UF 25V Z F TA26
C507	0CN1030F678	0.01M 16V M Y TA26
C508	0CN1020K518	1000P 50V K B TA26
C509	0CE1076D618	100M SMS 10V M FM5 TP(5)
C51	0CX2700K478	27P 50V J N750 TA26
C511	0CE3366F618	33M SMS 16V M FL TP(5)
C512	0CN1030F678	0.01M 16V M Y TA26
C513	0CN2230H948	0.022UF 25V Z F TA26
C514	0CQ1041N409	0.1U 100V J POLY TP
C515	0CQ1041N409	0.1U 100V J POLY TP
C516	0CQ1041N409	0.1U 100V J POLY TP
C517	0CE4756K618	4.7M SMS 50V M FL TP(5)
C518	0CQ3331N409	0.033U 100V J POLY TP
C519	0CN1030F678	0.01M 16V M Y TA26
C521	0CQ6831N409	0.068U 100V J POLY TP
C522	0CE3356K618	3.3M SMS 50V M FL TP(5)
C523	0CX4R70K518	4.7P 50V K NP0 TA26
C525	0CX4R70K518	4.7P 50V K NP0 TA26
C526	0CN2220F668	2200P 16V M X TA26
C527	0CN8220F678	8200P 16V M Y TA26
C528	0CN1030F678	0.01M 16V M Y TA26
C529	0CN2230H948	0.022UF 25V Z F TA26
C53	0CN1010K518	100P 50V K B TA26
C530	0CN6820F668	6800P 16V M X TA26
C536	0CX2400K478	24P 50V J N750 TA26
C538	0CX2400K478	24P 50V J N750 TA26
C539	0CN1020K518	1000P 50V K B TA26
C54	0CN1010K518	100P 50V K B TA26
C541	0CN1020K518	1000P 50V K B TA26
C542	0CN1040K948	0.1UF 50V Z F TA26
C543	0CN1040K948	0.1UF 50V Z F TA26
C544	0CQ4731N409	0.047U 100V J POLY TP
C545	0CN1520F568	1500P 16V K X TA26
C546	0CN2210K518	220P 50V K B TA26
C547	0CN1030F678	0.01M 16V M Y TA26
C548	0CE4746K618	0.47M SMS 50V M FL TP(5)

REF. NO.	PART NO.	DESCRIPTION
C55	0CN1010K518	100P 50V K B TA26
C550	0CN3910K518	390P 50V K B TA26
C551	0CN1210K518	120P 50V K B TA26
C552	0CN1210K518	120P 50V K B TA26
C553	0CN1210K518	120P 50V K B TA26
C554	0CN1210K518	120P 50V K B TA26
C555	0CE1066J618	10M SMS 35V M FL TP(5)
C556	0CN1010K518	100P 50V K B TA26
C557	0CE1076F618	100M SMS 16V M FM5 TP(5)
C56	0CN1010K518	100P 50V K B TA26
C560	0CN3910K518	390P 50V K B TA26
C561	0CN1210K518	120P 50V K B TA26
C562	0CN1210K518	120P 50V K B TA26
C563	0CN1210K518	120P 50V K B TA26
C564	0CN1210K518	120P 50V K B TA26
C565	0CE1066J618	10M SMS 35V M FL TP(5)
C566	0CN1010K518	100P 50V K B TA26
C57	0CN1010K518	100P 50V K B TA26
C575	0CN1030F678	0.01M 16V M Y TA26
C576	0CE4766F618	47M SMS 16V M FL TP(5)
C577	0CN1030F678	0.01M 16V M Y TA26
C581	0CN6820F668	6800P 16V M X TA26
C582	0CN2220F668	2200P 16V M X TA26
C583	0CX1000K408	10P 50V J SL TA26
C584	0CX4700K408	47P 50V J SL TA26
C585	0CQ1231N409	0.012U 100V J POLY TP
C586	0CN2230H948	0.022UF 25V Z F TA26
C587	0CE1076D618	100M SMS 10V M FM5 TP(5)
C588	0CE2276F618	220M SMS 16V M FM5 TP(5)
C589	0CE1076F618	100M SMS 16V M FM5 TP(5)
C59	0CN1030F678	0.01M 16V M Y TA26
C590	0CE1076D618	100M SMS 10V M FM5 TP(5)
C599	0CN1030F678	0.01M 16V M Y TA26
C6	0CN8220F678	8200P 16V M Y TA26
C60	0CE4766F618	47M SMS 16V M FL TP(5)
C600	0CN1030F678	0.01M 16V M Y TA26
C601	0CE1076D618	100M SMS 10V M FM5 TP(5)
C602	0CX1800K518	18P 50V K NP0 TA26
C603	0CX1800K518	18P 50V K NP0 TA26
C604	0CX3300K408	33P 50V J SL TA26
C604	561-805L	WAFER,B TO B 53095-1210
C605	0CX3300K408	33P 50V J SL TA26
C605	561-805L	WAFER,B TO B 53095-1210
C606	0CX4700K408	47P 50V J SL TA26
C607	0CE4753K618	4.7M SRE 50V M FL TP(5)
C608	0GN1040K948	0.1UF 50V Z F TA26
C609	0CN1040K948	0.1UF 50V Z F TA26
C610	0CE1076D618	100M SMS 10V M FM5 TP(5)
C611	0CN1030F678	0.01M 16V M Y TA26
C615	0CN1030F678	0.01M 16V M Y TA26
C616	0CE1076D618	100M SMS 10V M FM5 TP(5)
C7	0CE4766F618	47M SMS 16V M FL TP(5)
C8	0CE1076D618	100M SMS 10V M FM5 TP(5)
C801	0CE4766F618	47M SMS 16V M FL TP(5)
C97	0CN1510K518	150P 50V K B TA26
C98	0CN1040K948	0.1UF 50V Z F TA26
C983	0CE3386F650	3300M SMS 16V M FM7.5
C984	0CE4776D618	470M SMS 10V M FL TP(5)
C985	0CE4776D618	470M SMS 10V M FL TP(5)
C989	0CE3386H650	3300M SMS 25V M FM7.5
C991	0CK2230K945	0.022M 50V Z F TS
C992	0CK2230K945	0.022M 50V Z F TS
C993	0CK2230K945	0.022M 50V Z F TS
C994	0CK2230K945	0.022M 50V Z F TS
C998	0CE4766F618	47M SMS 16V M FL TP(5)

CONNECTOR

REF. NO.	PART NO.	DESCRIPTION
CN101	563-935I	C,AY GS IL-G08/06 (I,G) 240
CN201	563-601F	GS IL-S09/T09 1571#28 140
CN501	563-684F	PHR-08/IL-S08 2851 #28 120
CN502	563-706A	JST PHR-08RD/51004-0810 180
CN503	563-801U	IL-S05/IL-S05 1571 #28 100
CN504	563-801V	IL-S06/IL-S06 1571 #28 100
CN601	563-601F	GS IL-S09/T09 1571#28 140
CN602	563-601E	GS IL-S07/T07 1571#28 140
CN603	561-805L	WAFER,B TO B 53095-1210
CN801	563-701A	GS IL-S13/T13 1571#28 140
CN901	GGGF200J	C,AY GS IL-G07/IL-J07 (21)280
P604	561-804L	HOUSING,B TO B 52084-1210
P605	561-804L	HOUSING,B TO B 52084-1210
PN101	561-715H	WAFER,G/S GIL-G-08P-S3T2-E (S)
PN501	561S711H	WAFER, GIL-S-8P-S2T2-EFS
PN502	561S685H	WAFER, MOLEX 53014-0810(S)
PN503	561S711F	WAFER, GIL-S-6P-S2T2-EFS
PN504	561S711E	WAFER, GIL-S-5P-S2T2-EFS
PN520	561S711I	WAFER, GIL-S-9P-S2T2-EFS
PN601	561S712I	WAFER, GIL-S-9P-S2L2-EFS
PN602	561S712G	WEFER, GIL-S-7P-S2L2-EFS
PN603	561-804L	HOUSING,B TO B 52084-1210
PN901	561-715G	WAFER,G/S GIL-G-07P-S3T2-E (S)

DIODE

REF. NO.	PART NO.	DESCRIPTION
D1	0DD132009AA	1SS132 DETECT,SW TP
D2	0DD132009AA	1SS132 DETECT,SW TP
D221	0DD132009AA	1SS132 DETECT,SW TP
D222	0DD132009AA	1SS132 DETECT,SW TP
D223	0DD132009AA	1SS132 DETECT,SW TP
D224	0DD132009AA	1SS132 DETECT,SW TP
D225	0DD132009AA	1SS132 DETECT,SW TP
D226	0DD132009AA	1SS132 DETECT,SW TP
D243	0DD132009AA	1SS132 DETECT,SW TP
D245	0DD132009AA	1SS132 DETECT,SW TP
D3	0DD132009AA	1SS132 DETECT,SW TP
D4	0DD132009AA	1SS132 DETECT,SW TP
D507	0DD132009AA	1SS132 DETECT,SW TP
D6	0DD132009AA	1SS132 DETECT,SW TP
D601	0DD132009AA	1SS132 DETECT,SW TP
D7	0DD132009AA	1SS132 DETECT,SW TP
D981	0DD132009AA	1SS132 DETECT,SW TP
D991	0DD540200CA	1N5402,RECT,SILTER,FORMING
D992	0DD540200CA	1N5402,RECT,SILTER,FORMING
D993	0DD540200CA	1N5402,RECT,SILTER,FORMING
D994	0DD540200CA	1N5402,RECT,SILTER,FORMING

INTEGRATED CIRCUIT

REF. NO.	PART NO.	DESCRIPTION
IC101	0IKE622500A	KIA6225S (KIA7325P) KEC
IC102	0IRH330800A	BA3308 DUAL EQ ALC ROHM (S)
IC103	0IRH312600A	BA3126N HI-VOL HEAD S/W,ROHM/
IC200	0ISG731300A	TDA7313 ST E/V+F/S+A/LD+EQ
IC220	0IJR205800A	NJM2058D ST QUAD OP-AMP DIP
IC240	0IRH393000A	BA3930 REGULATOR CST,ROHM/J
IC3	0ISA721800A	LC7218 PLL,SANYO
IC300	0ISA462000A	LA4620 ST 17W 2-CH POWER AMP
IC501	0ISO178200A	CXA1782BQ TY SSP+RF FOR CDP
IC502	0ISO250800A	CXD2508Q TY DSP FOR CDP
IC503	0ISS925800A	KA9258D-T1 4CH DRIVER,S/S
IC504	0IRH620900B	BA6209N MOTOR DRIVER
IC505	0IGS455800A	GL4558 8D OP AMP
IC601	0IHI838130B	H8/3813 (HD6433813A56F) 957/15
IC602	668-905R	XC61AC3002TH 3V RESET 2K/TP
IC901	0ISE812500B	S81250HG TP/2K LD 5V V/REG
RM601	0IRH676000A	RPM-676CBR-L SENSOR RMC,ROHMJ

JACK

REF. NO.	PART NO.	DESCRIPTION
J351	571-002A	SHQ8596-01-010 K-HOSIDEN
JK300	571-112C	SHQ9085-01-040/HSJ9014-01-040
JK301	571-002A	SHQ8596-01-010 K-HOSIDEN

COIL & INDUCTOR

OPTION

REF. NO.	PART NO.	DESCRIPTION
L101	637-008A	33MH(CAP-CORE) BU SEONG
L140	634-610C	OSC TAPE 10(4.7MH)
L151	637-008A	33MH(CAP-CORE) BU SEONG
L2	0LA0331K018	3.3UH K 2.3X3.4 L5 TP
L300	0LA0331K018	3.3UH K 2.3X3.4 L5 TP
L301	0LA0331K018	3.3UH K 2.3X3.4 L5 TP
L351	0LA0331K018	3.3UH K 2.3X3.4 L5 TP
L501	0LA0221K018	2.2UH K 2.3X3.4 L5 TP
L502	0LA0221K018	2.2UH K 2.3X3.4 L5 TP
L601	0LA0102K018	10M K 2.3X3.4 L5 TP

LED & LCD

REF. NO.	PART NO.	DESCRIPTION
L602	0DL310009AC	SLV-31MC 83F 215,GN,ROHM-K
L603	0DL310009AC	SLV-31MC 83F 215,GN,ROHM-K
L604	0DL310009AC	SLV-31MC 83F 215,GN,ROHM-K
L606	0DL310009AC	SLV-31MC 83F 215,GN,ROHM-K
L607	0DL310009AC	SLV-31MC 83F 215,GN,ROHM-K
L608	0DL310009AC	SLV-31MC 83F 215,GN,ROHM-K
LCD601	659-151N	KXN19840DAP CD-975, KEC
LD601	0DL310009AC	SLV-31MC 83F 215,GN,ROHM-K
LD605	0DL310009AC	SLV-31MC 83F 215,GN,ROHM-K
LD611	0DL540009AH	SLR-54VR 80F 215(RD) ROHM-K

TRANSISTOR

REF. NO.	PART NO.	DESCRIPTION
Q10	0TR103009AE	KRC103M TP,KEC(KRC1203)
Q102	0TR130209AA	KTD1302 MUTING TP,KEC
Q103	0TR319809AA	KTC3198-Y (KTC1815) TP KEC
Q105	0TR114009AA	DTA114ES ROHM
Q106	0TR114009AE	DTC114TS-TP S/W ROHM
Q11	0TR319809AB	KTC3198-GR (KTC1815) TP KEC
Q12	0TR319809AB	KTC3198-GR (KTC1815) TP KEC
Q140	0TR320509AB	KTC3205-TP-Y (KTC2236A)KEC
Q152	0TR130209AA	KTD1302 MUTING TP,KEC
Q153	0TR319809AA	KTC3198-Y (KTC1815) TP KEC
Q185	0TR114009AE	DTC114TS-TP S/W ROHM
Q186	0TR114009AA	DTA114ES ROHM
Q20	0TR319809AA	KTC3198-Y (KTC1815) TP KEC
Q240	0TR320509AB	KTC3205-TP-Y (KTC2236A)KEC
Q25	0TR319809AA	KTC3198-Y (KTC1815) TP KEC
Q26	0TR103009AF	KRA103M TP,KEC(KRA2203)
Q27	0TR103009AF	KRA103M TP,KEC(KRA2203)
Q291	0TR320509AB	KTC3205-TP-Y (KTC2236A)KEC
Q292	0TR320509AB	KTC3205-TP-Y (KTC2236A)KEC
Q295	0TR102009AE	KRA102M TP,KEC(KRA2202)
Q296	0TR103009AE	KRC103M TP,KEC(KRC1203)
Q30	0TR130209AA	KTD1302 MUTING TP,KEC
Q301	0TR130209AA	KTD1302 MUTING TP,KEC
Q35	0TR130209AA	KTD1302 MUTING TP,KEC
Q351	0TR130209AA	KTD1302 MUTING TP,KEC
Q501	0TR126609AB	KTA1266-GR TP,KEC(KTA1015GR)
Q503	0TR126609AB	KTA1266-GR TP,KEC(KTA1015GR)
Q504	0TR110009AE	KRC110M TP,KEC(KRC1210)
Q505	0TR110009AE	KRC110M TP,KEC(KRC1210)
Q507	0TR103009AE	KRC103M TP,KEC(KRC1203)
Q508	0TR104009AG	KRC104M (KRC1204) TP KEC
Q509	0TR104009AE	KRA104M TP,KEC(KRA2204)
Q601	0TR114009AD	DTC114ES ROHM-K
Q602	0TR130209AA	KTD1302 MUTING TP,KEC
Q7	0TR126609AA	KTA1266-TP-Y (KTA1015) KEC
Q8	0TR103009AF	KRA103M TP,KEC(KRA2203)
Q801	0TR127309AA	KTA1273-TP-Y (KTA966A)KEC
Q802	0TR114009AE	DTC114TS-TP S/W ROHM
Q803	0TR114009AA	DTA114ES ROHM
Q804	0TR103009AE	KRC103M TP,KEC(KRC1203)
Q811	0TR127309AA	KTA1273-TP-Y (KTA966A)KEC
Q812	0TR114009AE	DTC114TS-TP S/W ROHM
Q813	0TR114009AE	DTC114TS-TP S/W ROHM
Q9	0TR103009AE	KRC103M TP,KEC(KRC1203)
Q981	0TR319809AB	KTC3198-GR (KTC1815) TP KEC
Q983	0TR320509AA	KTC3205-TP-O (KTC2236A)KEC
Q991	0TR319809AB	KTC3198-GR (KTC1815) TP KEC

RESISTOR

REF. NO.	PART NO.				
R1	0RD2201F608	2.2K	1/6W	5	TA26
R10	0RD4702F608	47K	1/6W	5	TA26
R101	0RD1003F608	100K	1/6W	5	TA26
R102	0RD0472F608	47	1/6W	5	TA26
R103	0RD1000F608	100	1/6W	5	TA26
R104	0RD1003F608	100K	1/6W	5	TA26
R105	0RD2701F608	2.7K	1/6W	5	TA26
R107	0RD1001F608	1.0K	1/6W	5	TA26
R11	0RD1002F608	10K	1/6W	5	TA26
R110	0RD1003F608	100K	1/6W	5	TA26
R111	0RD1001F608	1.0K	1/6W	5	TA26
R112	0RD5601F608	5.6K	1/6W	5	TA26
R12	0RD2201F608	2.2K	1/6W	5	TA26
R122	0RD4701F608	4.7K	1/6W	5	TA26
R124	0RD5602F608	56K	1/6W	5	TA26
R125	0RD5602F608	56K	1/6W	5	TA26
R126	0RD1501F608	1.5K	1/6W	5	TA26
R127	0RD5602F608	56K	1/6W	5	TA26
R128	0RD2203F608	220K	1/6W	5	TA26
R129	0RD1000F608	100	1/6W	5	TA26
R13	0RD4701F608	4.7K	1/6W	5	TA26
R130	0RD1002F608	10K	1/6W	5	TA26
R131	0RD8202F608	82K	1/6W	5	TA26
R14	0RD0332F608	33	1/6W	5	TA26
R141	0RD1000F608	100	1/6W	5	TA26
R142	0RD1502F608	15K	1/6W	5	TA26
R143	0RD0102F608	10	1/6W	5	TA26
R151	0RD1003F608	100K	1/6W	5	TA26
R152	0RD0472F608	47	1/6W	5	TA26
R154	0RD1003F608	100K	1/6W	5	TA26
R155	0RD2701F608	2.7K	1/6W	5	TA26
R157	0RD1001F608	1.0K	1/6W	5	TA26
R160	0RD1003F608	100K	1/6W	5	TA26
R161	0RD1001F608	1.0K	1/6W	5	TA26
R162	0RD5601F608	5.6K	1/6W	5	TA26
R17	0RD6801F608	6.8K	1/6W	5	TA26
R172	0RD4701F608	4.7K	1/6W	5	TA26
R174	0RD5602F608	56K	1/6W	5	TA26
R175	0RD5602F608	56K	1/6W	5	TA26
R176	0RD1501F608	1.5K	1/6W	5	TA26
R177	0RD5602F608	56K	1/6W	5	TA26
R18	0RN9090F408	909	1/6W	1	TA26
R180	0RD1002F608	10K	1/6W	5	TA26
R181	0RD8202F608	82K	1/6W	5	TA26
R185	0RD1001F608	1.0K	1/6W	5	TA26
R19	0RD3301F608	3.3K	1/6W	5	TA26
R194	0RD4701F608	4.7K	1/6W	5	TA26
R195	0RD3901F608	3.9K	1/6W	5	TA26
R196	0RD2200F608	220	1/6W	5	TA26
R2	0RD4703F608	470K	1/6W	5	TA26
R20	0RD1002F608	10K	1/6W	5	TA26
R200	0RD1000F608	100	1/6W	5	TA26
R201	0RD4702F608	47K	1/6W	5	TA26
R202	0RD1502F608	15K	1/6W	5	TA26

REF. NO.	PART NO.	DESCRIPTION			
R203	0RD4701F608	4.7K	1/6W	5	TA26
R205	0RD5601F608	5.6K	1/6W	5	TA26
R208	0RD1001F608	1.0K	1/6W	5	TA26
R209	0RD1001F608	1.0K	1/6W	5	TA26
R22	0RD4702F608	47K	1/6W	5	TA26
R221	0RD5602F608	56K	1/6W	5	TA26
R223	0RD2203F608	220K	1/6W	5	TA26
R224	0RD1001F608	1.0K	1/6W	5	TA26
R225	0RD5602F608	56K	1/6W	5	TA26
R226	0RD2202F608	22K	1/6W	5	TA26
R227	0RD6803F608	680K	1/6W	5	TA26
R228	0RD4701F608	4.7K	1/6W	5	TA26
R229	0RD6803F608	680K	1/6W	5	TA26
R23	0RD1002F608	10K	1/6W	5	TA26
R230	0RD1502F608	15K	1/6W	5	TA26
R231	0RD6800F608	680	1/6W	5	TA26
R232	0RD1803F608	180K	1/6W	5	TA26
R233	0RD4701F608	4.7K	1/6W	5	TA26
R234	0RD6803F608	680K	1/6W	5	TA26
R235	0RD1502F608	15K	1/6W	5	TA26
R236	0RD2202F608	22K	1/6W	5	TA26
R237	0RD1203F608	120K	1/6W	5	TA26
R238	0RD4701F608	4.7K	1/6W	5	TA26
R239	0RD6803F608	680K	1/6W	5	TA26
R24	0RD1002F608	10K	1/6W	5	TA26
R240	0RD4700F608	470	1/6W	5	TA26
R241	0RD1000F608	100	1/6W	5	TA26
R245	0RD1002F608	10K	1/6W	5	TA26
R246	0RD1002F608	10K	1/6W	5	TA26
R247	0RD1001F608	1.0K	1/6W	5	TA26
R25	0RD4702F608	47K	1/6W	5	TA26
R251	0RD4702F608	47K	1/6W	5	TA26
R252	0RD1502F608	15K	1/6W	5	TA26
R253	0RD4701F608	4.7K	1/6W	5	TA26
R255	0RD5601F608	5.6K	1/6W	5	TA26
R26	0RD1003F608	100K	1/6W	5	TA26
R265	0RD3902F608	39K	1/6W	5	TA26
R266	0RD3902F608	39K	1/6W	5	TA26
R27	0RD1003F608	100K	1/6W	5	TA26
R271	0RD5602F608	56K	1/6W	5	TA26
R28	0RD1002F608	10K	1/6W	5	TA26
R29	0RD1002F608	10K	1/6W	5	TA26
R294	0RD3300F608	330	1/6W	5	TA26
R295	0RD3300F608	330	1/6W	5	TA26
R3	0RD1003F608	100K	1/6W	5	TA26
R30	0RD4701F608	4.7K	1/6W	5	TA26
R301	0RD1001F608	1.0K	1/6W	5	TA26
R303	0RD1001F608	1.0K	1/6W	5	TA26
R304	0RD0221F608	2.2	1/6W	5	TA26
R306	0RD0221F608	2.2	1/6W	5	TA26
R307	0RD2200F608	220	1/6W	5	TA26
R31	0RD1002F608	10K	1/6W	5	TA26
R32	0RD4701F608	4.7K	1/6W	5	TA26
R321	0RD1502F608	15K	1/6W	5	TA26
R331	0RD1202F608	12K	1/6W	5	TA26
R35	0RD4701F608	4.7K	1/6W	5	TA26
R351	0RD1001F608	1.0K	1/6W	5	TA26
R353	0RD1001F608	1.0K	1/6W	5	TA26
R354	0RD0221F608	2.2	1/6W	5	TA26
R356	0RD0221F608	2.2	1/6W	5	TA26
R357	0RD2200F608	220	1/6W	5	TA26
R36	0RD1002F608	10K	1/6W	5	TA26
R37	0RD4701F608	4.7K	1/6W	5	TA26
R40	0RD0102F608	10	1/6W	5	TA26
R41	0RD1002F608	10K	1/6W	5	TA26
R501	0RD1001F608	1.0K	1/6W	5	TA26
R502	0RD8200F608	820	1/6W	5	TA26
R503	0RD2203F608	220K	1/6W	5	TA26
R504	0RD1503F608	150K	1/6W	5	TA26

REF. NO.	PART NO.	DESCRIPTION			
R505	0RD4703F608	470K	1/6W	5	TA26
R506	0RD3303F608	330K	1/6W	5	TA26
R507	0RD0822F608	82	1/6W	5	TA26
R508	0RD0222F608	22	1/6W	5	TA26
R509	0RD1002F608	10K	1/6W	5	TA26
R51	0RD0102F608	10	1/6W	5	TA26
R510	0RD1002F608	10K	1/6W	5	TA26
R511	0RD6803F608	680K	1/6W	5	TA26
R512	0RD1003F608	100K	1/6W	5	TA26
R513	0RD4703F608	470K	1/6W	5	TA26
R514	0RD8202F608	82K	1/6W	5	TA26
R515	0RD1802F608	18K	1/6W	5	TA26
R516	0RD8202F608	82K	1/6W	5	TA26
R517	0RD4702F608	47K	1/6W	5	TA26
R518	0RD5602F608	56K	1/6W	5	TA26
R519	0RD1503F608	150K	1/6W	5	TA26
R521	0RD2201F608	2.2K	1/6W	5	TA26
R522	0RD1802F608	18K	1/6W	5	TA26
R523	0RD1202F608	12K	1/6W	5	TA26
R524	0RD1002F608	10K	1/6W	5	TA26
R526	0RD1002F608	10K	1/6W	5	TA26
R527	0RD4702F608	47K	1/6W	5	TA26
R528	0RD3302F608	33K	1/6W	5	TA26
R529	0RD1002F608	10K	1/6W	5	TA26
R53	0RD2201F608	2.2K	1/6W	5	TA26
R530	0RD1002F608	10K	1/6W	5	TA26
R531	0RD0332F608	33	1/6W	5	TA26
R532	0RD0332F608	33	1/6W	5	TA26
R533	0RD1001F608	1.0K	1/6W	5	TA26
R534	0RD1001F608	1.0K	1/6W	5	TA26
R535	0RD1001F608	1.0K	1/6W	5	TA26
R536	0RD1001F608	1.0K	1/6W	5	TA26
R54	0RD2201F608	2.2K	1/6W	5	TA26
R541	0RD3301F608	3.3K	1/6W	5	TA26
R542	0RD1203F608	120K	1/6W	5	TA26
R543	0RD3301F608	3.3K	1/6W	5	TA26
R544	0RD1004F608	1.0M	1/6W	5	TA26
R545	0RD1003F608	100K	1/6W	5	TA26
R546	0RD1002F608	10K	1/6W	5	TA26
R548	0RD1004F608	1.0M	1/6W	5	TA26
R55	0RD2201F608	2.2K	1/6W	5	TA26
R550	0RD1002F608	10K	1/6W	5	TA26
R551	0RD1002F608	10K	1/6W	5	TA26
R552	0RD3902F608	39K	1/6W	5	TA26
R553	0RD3902F608	39K	1/6W	5	TA26
R554	0RD3302F608	33K	1/6W	5	TA26
R555	0RD3302F608	33K	1/6W	5	TA26
R556	0RD4702F608	47K	1/6W	5	TA26
R557	0RD4702F608	47K	1/6W	5	TA26
R558	0RD5600F608	560	1/6W	5	TA26
R56	0RD2201F608	2.2K	1/6W	5	TA26
R560	0RD1002F608	10K	1/6W	5	TA26
R561	0RD1002F608	10K	1/6W	5	TA26
R562	0RD3902F608	39K	1/6W	5	TA26
R563	0RD3902F608	39K	1/6W	5	TA26
R564	0RD3302F608	33K	1/6W	5	TA26
R565	0RD3302F608	33K	1/6W	5	TA26
R566	0RD4702F608	47K	1/6W	5	TA26
R567	0RD4702F608	47K	1/6W	5	TA26
R568	0RD5600F608	560	1/6W	5	TA26
R57	0RD1002F608	10K	1/6W	5	TA26
R571	0RD8201F608	8.2K	1/6W	5	TA26
R572	0RD6801F608	6.8K	1/6W	5	TA26
R581	0RD1000F608	100	1/6W	5	TA26
R582	0RD1003F608	100K	1/6W	5	TA26
R583	0RD4702F608	47K	1/6W	5	TA26
R584	0RD3302F608	33K	1/6W	5	TA26
R585	0RD2202F608	22K	1/6W	5	TA26
R586	0RD2701F608	2.7K	1/6W	5	TA26

REF. NO.	PART NO.	DESCRIPTION			
R587	0RD1003F608	100K	1/6W	5	TA26
R588	0RD1503F608	150K	1/6W	5	TA26
R589	0RD1002F608	10K	1/6W	5	TA26
R59	0RD4701F608	4.7K	1/6W	5	TA26
R596	0RD1002F608	10K	1/6W	5	TA26
R597	0RD1202F608	12K	1/6W	5	TA26
R598	0RD1002F608	10K	1/6W	5	TA26
R599	0RD1004F608	1.0M	1/6W	5	TA26
R601	0RN1002F408	10K	1/6W	1	TA26
R602	0RD6800F608	680	1/6W	5	TA26
R603	0RD8200F608	820	1/6W	5	TA26
R604	0RD1201F608	1.2K	1/6W	5	TA26
R605	0RD1501F608	1.5K	1/6W	5	TA26
R606	0RD2201F608	2.2K	1/6W	5	TA26
R607	0RD3301F608	3.3K	1/6W	5	TA26
R608	0RD4701F608	4.7K	1/6W	5	TA26
R609	0RD8201F608	8.2K	1/6W	5	TA26
R610	0RD1502F608	15K	1/6W	5	TA26
R613	0RN1002F408	10K	1/6W	1	TA26
R614	0RD6800F608	680	1/6W	5	TA26
R615	0RD8200F608	820	1/6W	5	TA26
R616	0RD1201F608	1.2K	1/6W	5	TA26
R617	0RD1501F608	1.5K	1/6W	5	TA26
R618	0RD2201F608	2.2K	1/6W	5	TA26
R619	0RD3301F608	3.3K	1/6W	5	TA26
R620	0RD4701F608	4.7K	1/6W	5	TA26
R621	0RD1003F608	100K	1/6W	5	TA26
R622	0RD4702F608	47K	1/6W	5	TA26
R623	0RD1003F608	100K	1/6W	5	TA26
R624	0RD6801F608	6.8K	1/6W	5	TA26
R641	0RD4701F608	4.7K	1/6W	5	TA26
R642	0RD1002F608	10K	1/6W	5	TA26
R643	0RD1001F608	1.0K	1/6W	5	TA26
R644	0RD1001F608	1.0K	1/6W	5	TA26
R645	0RD1003F608	100K	1/6W	5	TA26
R646	0RD1004F608	1.0M	1/6W	5	TA26
R647	0RD1001F608	1.0K	1/6W	5	TA26
R648	0RD1001F608	1.0K	1/6W	5	TA26
R651	0RD8201F608	8.2K	1/6W	5	TA26
R652	0RD1802F608	18K	1/6W	5	TA26
R653	0RD4702F608	47K	1/6W	5	TA26
R654	0RD8201F608	8.2K	1/6W	5	TA26

REF. NO.	PART NO.	DESCRIPTION			
R655	0RD8201F608	8.2K	1/6W	5	TA26
R656	0RD8201F608	8.2K	1/6W	5	TA26
R657	0RD3902F608	39K	1/6W	5	TA26
R658	0RD1002F608	10K	1/6W	5	TA26
R671	0RD2700F608	270	1/6W	5	TA26
R672	0RD2700F608	270	1/6W	5	TA26
R674	0RD3301F608	3.3K	1/6W	5	TA26
R675	0RD2201F608	2.2K	1/6W	5	TA26
R677	0RD1201F608	1.2K	1/6W	5	TA26
R678	0RD1201F608	1.2K	1/6W	5	TA26
R691	0RD8201F608	8.2K	1/6W	5	TA26
R692	0RD1502F608	15K	1/6W	5	TA26
R693	0RD2702F608	27K	1/6W	5	TA26
R7	0RD4701F608	4.7K	1/6W	5	TA26
R701	0RD0332F608	33	1/6W	5	TA26
R702	0RD0332F608	33	1/6W	5	TA26
R8	0RD4701F608	4.7K	1/6W	5	TA26
R801	0RD3902F608	39K	1/6W	5	TA26
R802	0RD8201F608	8.2K	1/6W	5	TA26
R803	0RD4702F608	47K	1/6W	5	TA26
R804	0RD3902F608	39K	1/6W	5	TA26
R805	0RD8201F608	8.2K	1/6W	5	TA26
R806	0RD4702F608	47K	1/6W	5	TA26
R807	0RD8201F608	8.2K	1/6W	5	TA26
R808	0RD8201F608	8.2K	1/6W	5	TA26
R810	0RD1802F608	18K	1/6W	5	TA26
R811	0RD8201F608	8.2K	1/6W	5	TA26
R812	0RD1802F608	18K	1/6W	5	TA26
R813	0RD8201F608	8.2K	1/6W	5	TA26
R814	0RD8201F608	8.2K	1/6W	5	TA26
R815	0RD8201F608	8.2K	1/6W	5	TA26
R821	0RD1002F608	10K	1/6W	5	TA26
R822	0RD4701F608	4.7K	1/6W	5	TA26
R823	0RD1002F608	10K	1/6W	5	TA26
R824	0RD4701F608	4.7K	1/6W	5	TA26
R981	0RD1003F608	100K	1/6W	5	TA26
R982	0RD1003F608	100K	1/6W	5	TA26
R983	0RD4702F608	47K	1/6W	5	TA26
R985	0RD1000F608	100	1/6W	5	TA26
R991	0RD5601F608	5.6K	1/6W	5	TA26
R992	0RD4702F608	47K	1/6W	5	TA26
R993	0RD4702F608	47K	1/6W	5	TA26

SWITCH

S602	558T908A	TACT SKHV10908A H=4.3 TP
S603	558T908A	TACT SKHV10908A H=4.3 TP
S604	558T908A	TACT SKHV10908A H=4.3 TP
S605	558T908A	TACT SKHV10908A H=4.3 TP
S606	558T908A	TACT SKHV10908A H=4.3 TP
S608	558T908A	TACT SKHV10908A H=4.3 TP
S609	558T908A	TACT SKHV10908A H=4.3 TP
S610	558T908A	TACT SKHV10908A H=4.3 TP
S613	558T908A	TACT SKHV10908A H=4.3 TP
S614	558T908A	TACT SKHV10908A H=4.3 TP
S616	558T908A	TACT SKHV10908A H=4.3 TP
S617	558T908A	TACT SKHV10908A H=4.3 TP
S618	558T908A	TACT SKHV10908A H=4.3 TP
S619	558T908A	TACT SKHV10908A H=4.3 TP
S620	558T908A	TACT SKHV10908A H=4.3 TP
S622	558T908A	TACT SKHV10908A H=4.3 TP
S623	558T908A	TACT SKHV10908A H=4.3 TP
SW140	552-628B	JSS 2324 2P3P JEIL
SW601	558T908A	TACT SKHV10908A H=4.3 TP
SW607	558T908A	TACT SKHV10908A H=4.3 TP
SW615	558T908A	TACT SKHV10908A H=4.3 TP
SW621	558T908A	TACT SKHV10908A H=4.3 TP
SW631	558-026I	TACT JTP-1236A JEIL
SW901	552-625C	NOT USE,00120353G(SAUDI)

POWER TRANS & FUSE

REF. NO.	PART NO.	DESCRIPTION	REF. NO.	PART NO.	DESCRIPTION

TRIMMER & TUNER PACK

TC1	623-001E	TRIMMER,C CVN610 DONG-KUK (S)	TUN1	521-201F	TUNER PACK KCC-904(V)FM/MW/SW
TUN1	521-201D	TUNER PACK KCC-902(V)FM/AM	TUN1	521-201G	TUNER PACK KCC-903(V)FM/MW/LW

VARIABLE RESISTOR

V5[illegible]	613S008J	EVA-D8N A02 BE4 (22KB) STICK	VR801	0RV1222D550	2.2K 6 AG P3 L2.5 2.5
[illegible]1	613S008J	EVA-D8N A02 BE4 (22KB) STICK			

CERAMIC FILTER

X50	617T602D	7.2MHZ	X601	617-602F	32.768KHZ 12.5PF CFS-206 (S)
X501	617T606B	33.8688MHZ (((15PF) HYOSUNG	X602	616-020M	CSA4.00MG MURATA

ZENER DIODE

Z[illegible]	0DZ680009CC	MTZ6.8C-T-77 ROHM-K	ZD981	0DZ680009CC	MTZ6.8C-T-77 ROHM-K
Z[illegible]	0DZ120009IA	MTZ12-C T-77 12V TP,ROHM/K	ZD985	0DZ100009FA	MTZ10-C T-77 10V TP,ROHM/K
ZD[illegible]	0DZ120009IA	MTZ12-C T-77 12V TP,ROHM/K	ZD991	0DZ270009CC	MTZ27D-T-77 ROHM-K
ZD501	0DZ390009BC	MTZ3.9B-T-77 ROHM-K			

MISCELLANEOUS

[illegible]	3874S-2060A	INSTRUCTION MANUAL(FOR GOLDSTAR)	[illegible]	3890S-G064M	GIFT BOX (FOR LGEUS)
[illegible]	3874S-2060D	INSTRUCTION MANUAL(FOR EXPERT)	[illegible]	3890S-G064N	GIFT BOX (FOR EXPERT)
[illegible]	3890S-G064A	GIFT BOX (FOR LGEPS)	[illegible]	3890S-G064O	GIFT BOX (FOR LGEFS)
[illegible]	3890S-G064F	GIFT BOX (FOR SONTEC,BROTHERS)	[illegible]	3890S-G064P	GIFT BOX (FOR LGECI)
[illegible]	3890S-G064L	GIFT BOX (FOR LGEMK)	[illegible]	3890S-G064Q	GIFT BOX (FOR LGEUK)

OPTION

For manual and gift box part numbers about unspecified buyers, please refer to service part price list supplied individually.