SCHEMATIC DIAGRAM

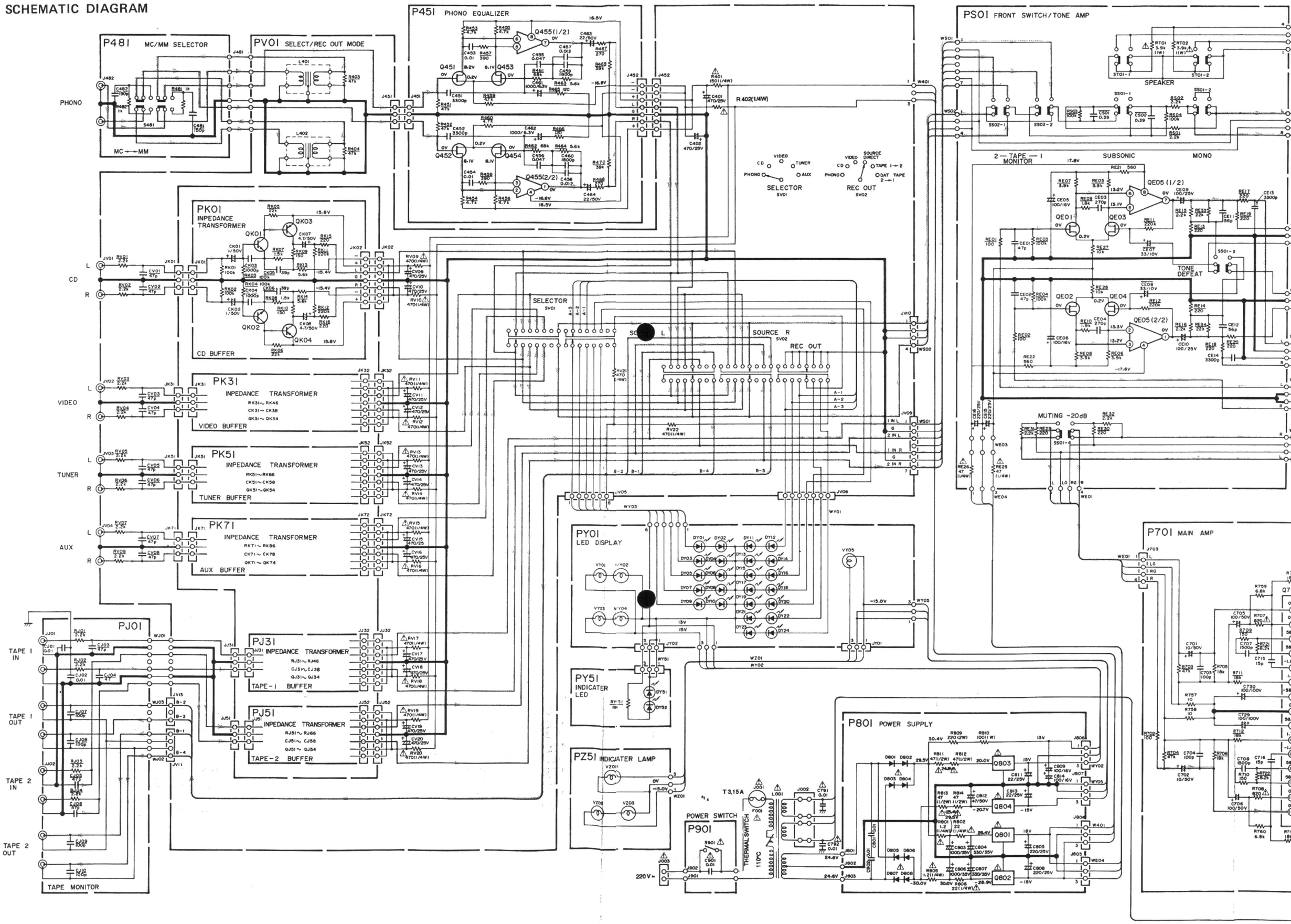

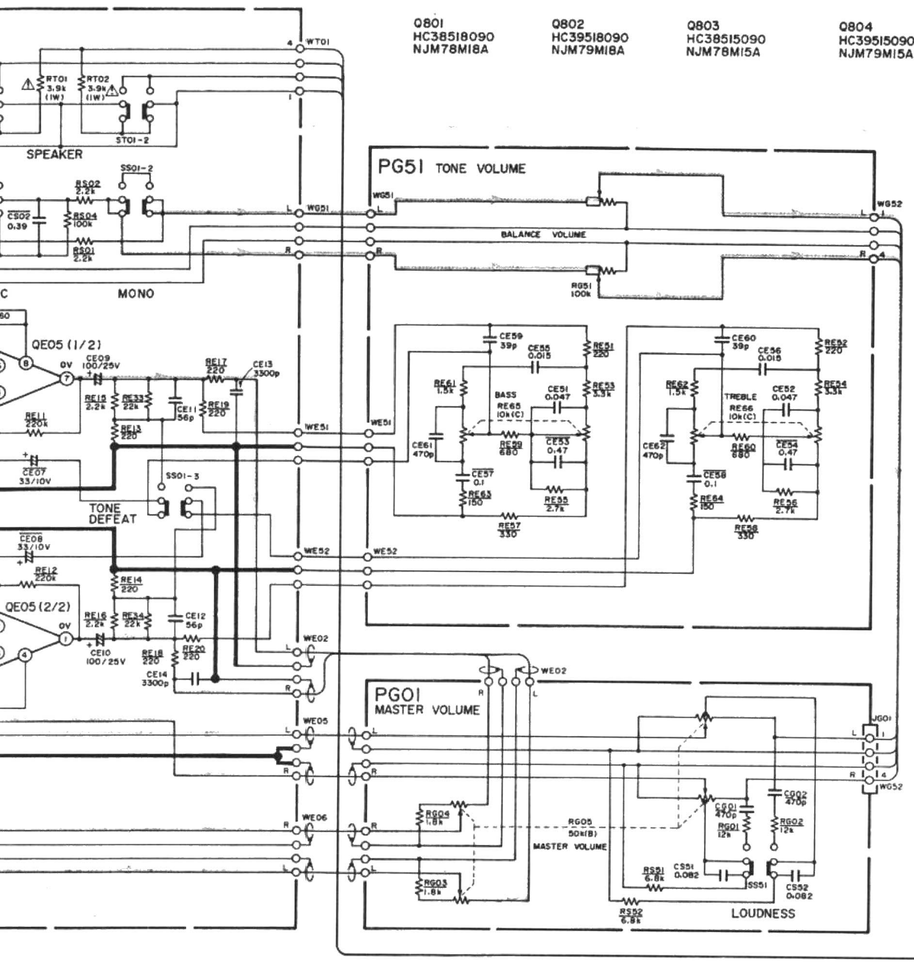

Q801 HC38518090 NJM78MI8A	Q802 HC39518090 NJM79MI8A	Q803 HC38515090 NJM78MI5A	Q804 HC39515090 NJM79MI5A

Q701, Q702 HT415080A0 2SD1508	QN03 HT109701A0 2SA970 (G,R)
Q703, Q704 HT322292A0 2SC2229 (O,Y)	QN04 HC10042050 TA7317P
Q705, Q706 HT101492A0 2SA949 (O,Y)	
Q707, Q708 HT332982G0 2SC3298 (O,Y)	D703 ~ D706, DN04 HD20010000 ISS133, IS2473
Q709, Q710 HT113062G0 2SA1306 (O,Y)	D707, D708 HD30391000 MTZJ3.9A
Q711, Q712 Q715, Q716 HT331822A3 2SC3182 (R,O)	D709, D710 HD30471000 MTZJ4.7B
Q713, Q714 HT112652A3 2SA1265 (R,O)	DN01, DN02 HD20014010 ISS81
Q719 HC10229030 STK3102 MK 4	DN03, DN05, DN06 D783 ~ D786 D801 ~ D808 HD20002030 DSF10C
Q455 HC10020360 LM833	D781, D782 HE20009290 S5V20
QE01 ~ QE04 Q451 ~ Q454 HF203691B0 2SK369BL	DN07 HD30017090 BZ-090
QK01, QK02, QK31, QK32 QK51, QK52, QK71, QK72 QJ31, QJ32 HT324581L0 2SC2458L (G,R)	D711, D712 D713, D714 HD20014010 ISS81
QK03, QK04, QK33, QK34 QK53, QK54, QK73, QK74 QJ33, QJ34, QJ53, QJ54 HT110481L0 2SA1048L (G,R)	DY01 ~ DY20 HI10072320 GL3HD47
QN01, QN02 HT322401A0 2SC2240	DY51, DY52 HI10071320 GL3HS47

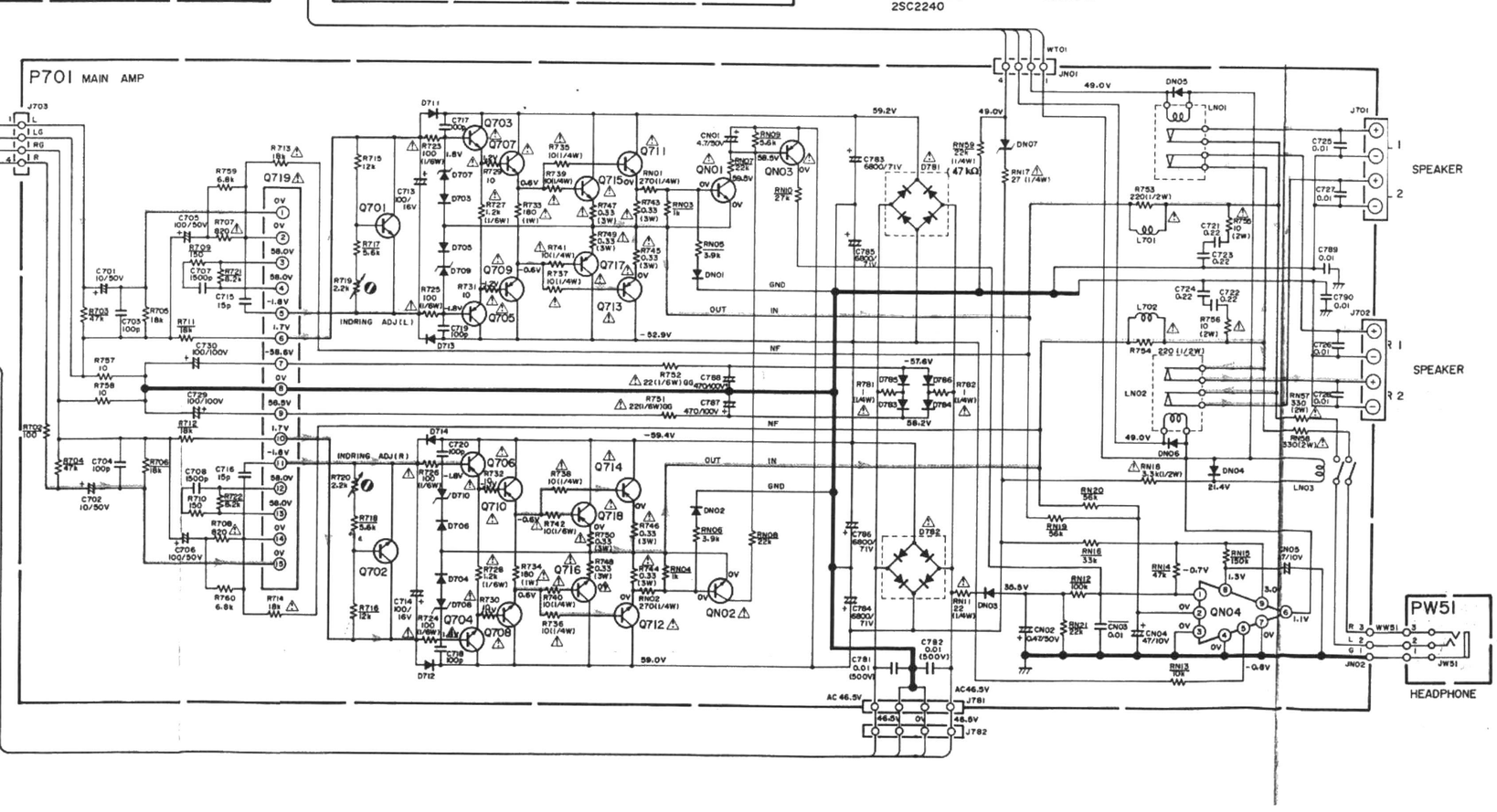

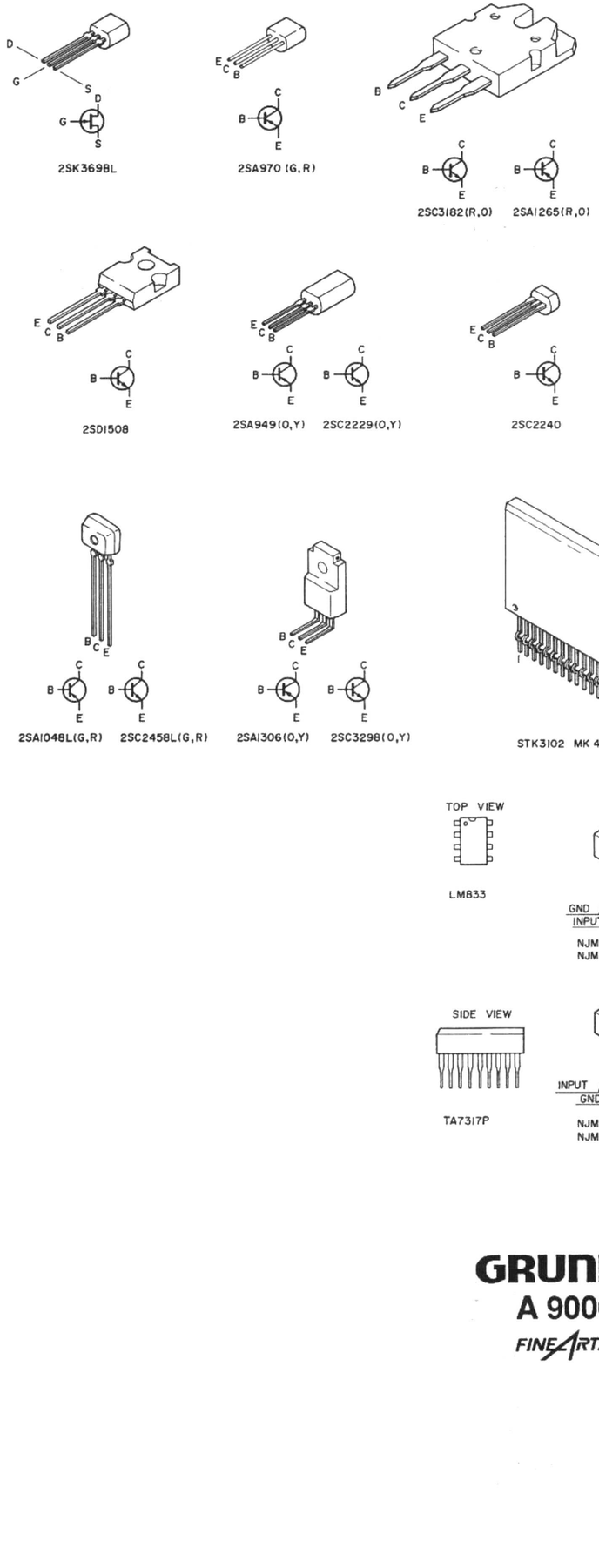

GRUNDIG

A 9000

FINE ARTS