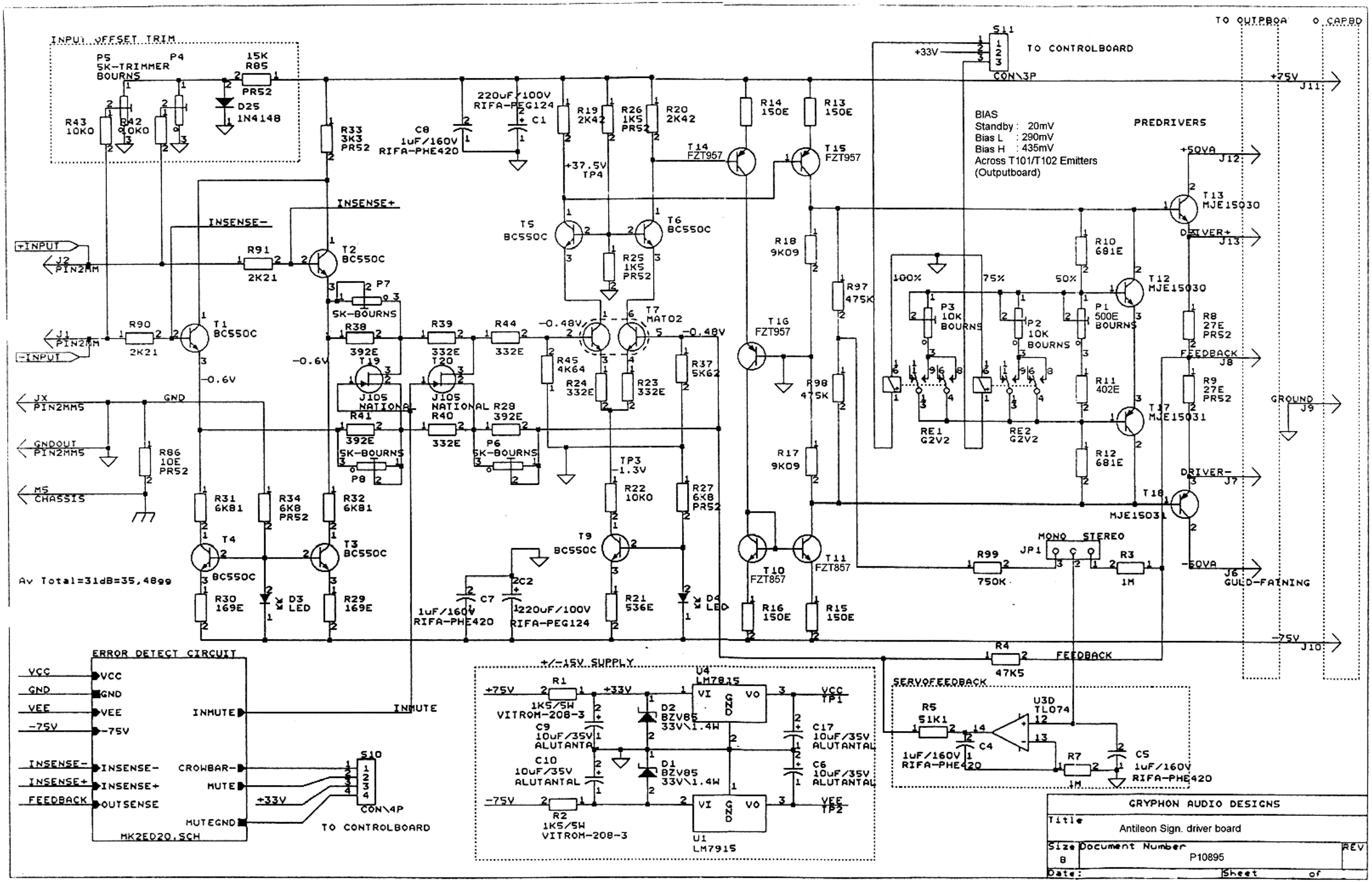
INPUT OFFSET TRIM
P5
5K-TRIMMER
BOURNS
P4
15K
R85
PR52
D25
1N4148
R43
10K0
R42
10K0
R33
3K3
PR52
C8
1uF/160V
RIFA-PHE420
220uF/100V
RIFA-PEG124
C1
R19
2K42
R26
1K5
PR52
R20
2K42
+37.5V
TP4
T14
FZT957
R14
150E
R13
150E
T15
FZT957
S11
CON\3P
TO CONTROLBOARD
+33V
TO OUTPBOA
O CAPBD
+75V
J11
BIAS
Standby : 20mV
Bias L : 290mV
Bias H : 435mV
Across T101/T102 Emitters
(Outputboard)
PREDRIVERS
+50VA
J12
T13
MJE15030
DRIVER+
J13
INSENSE+
INSENSE-
+INPUT
J2
PIN2MM
R91
2K21
T2
BC550C
T5
BC550C
T6
BC550C
R25
1K5
PR52
R18
9K09
R97
475K
R10
681E
100%
75%
50%
P3
10K
BOURNS
P2
10K
BOURNS
P1
500E
BOURNS
T12
MJE15030
R8
27E
PR52
P7
5K-BOURNS
J1
PIN2MM
-INPUT
R90
2K21
T1
BC550C
-0.6V
R38
392E
R39
332E
R44
332E
-0.48V
T7
MAT02
-0.48V
T16
FZT957
R45
4K64
R24
332E
R23
332E
R37
5K62
T19
J105
NATIONAL
T20
J105
NATIONAL
R28
392E
R98
475K
RE1
G2V2
RE2
G2V2
R11
402E
FEEDBACK
J8
R9
27E
PR52
T17
MJE15031
GROUND
J9
JX
PIN2MM5
GND
R41
392E
5K-BOURNS
P8
R40
332E
P6
5K-BOURNS
GNDOUT
PIN2MM5
R86
10E
PR52
M5
CHASSIS
TP3
-1.3V
R22
10K0
R27
6K8
PR52
R17
9K09
R12
681E
DRIVER-
J7
T18
MJE15031
R31
6K81
R34
6K8
PR52
R32
6K81
T4
BC550C
T3
BC550C
T9
BC550C
MONO
STEREO
JP1
R99
750K
R3
1M
T10
FZT857
T11
FZT857
-50VA
J6
GULD-FATNING
Av Total=31dB=35,4899
R30
169E
D3
LED
R29
169E
C7
1uF/160V
RIFA-PHE420
2C2
1220uF/100V
RIFA-PEG124
R21
536E
D4
LED
R16
150E
R15
150E
-75V
J10
R4
47K5
FEEDBACK
ERROR DETECT CIRCUIT
VCC
GND
VEE
-75V
INSENSE-
INSENSE+
FEEDBACK
INMUTE
CROWBAR-
MUTE
MUTEGND
OUTSENSE
MK2ED20.SCH
INMUTE
S10
CON\4P
+33V
TO CONTROLBOARD
+/-15V SUPPLY
+75V
R1
1K5/5W
VITROM-208-3
+33V
U4
LM7815
VI
VO
GND
VCC
TP1
C9
10uF/35V
ALUTANTAL
D2
BZV85
33V\1.4W
C17
10uF/35V
ALUTANTAL
C10
10uF/35V
ALUTANTAL
D1
BZV85
33V\1.4W
C6
10uF/35V
ALUTANTAL
-75V
R2
1K5/5W
VITROM-208-3
U1
LM7915
VEE
TP2
SERVOFEEDBACK
R5
51K1
U3D
TL074
C4
1uF/160V
RIFA-PHE420
R7
1M
C5
1uF/160V
RIFA-PHE420
GRYPHON AUDIO DESIGNS
Title
Antileon Sign. driver board
Size
B
Document Number
P10895
REV
Date:
Sheet
of

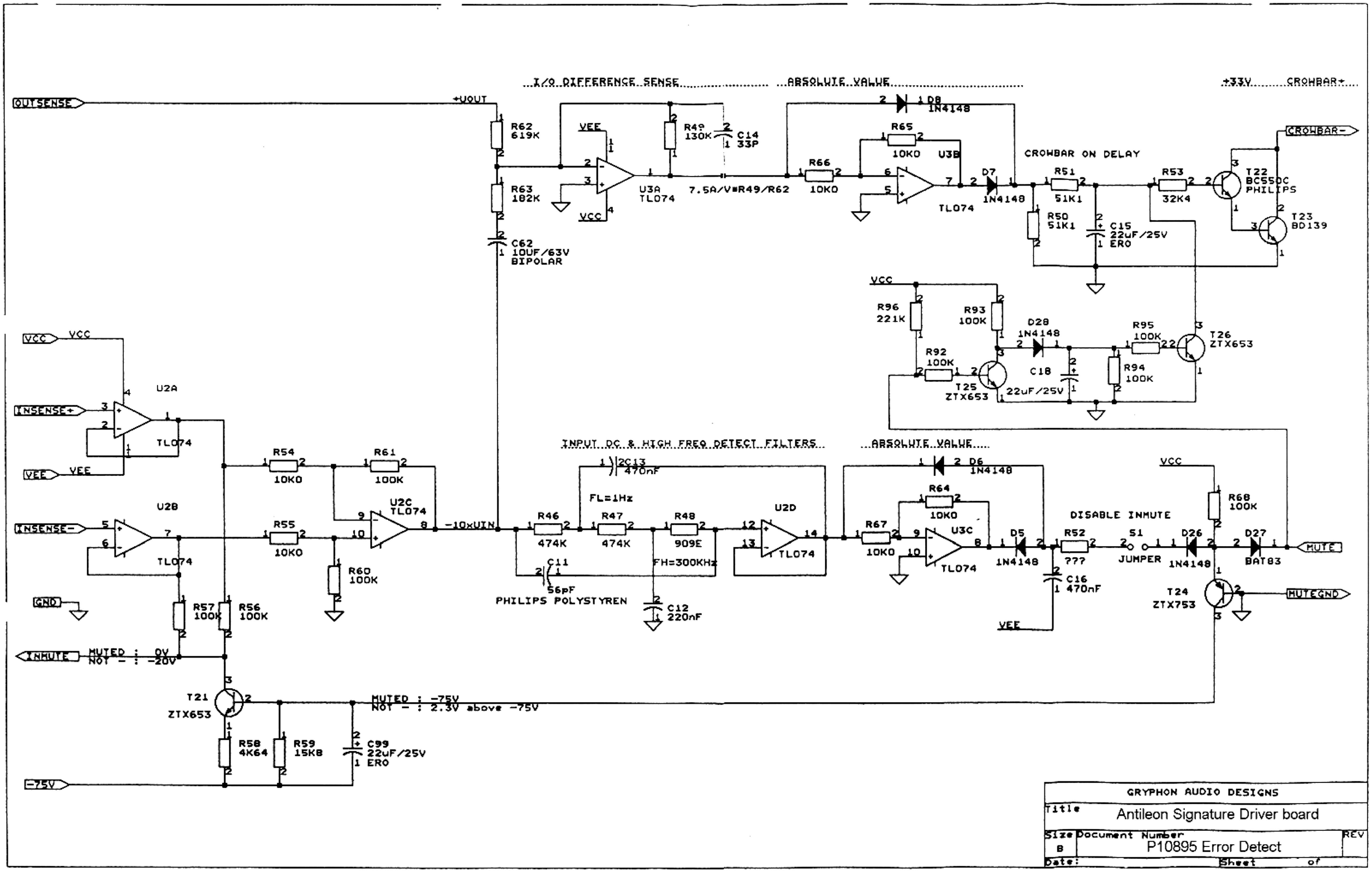

GRYPHON AUDIO DESIGNS

Title: Antileon Signature Driver board

Size: B | Document Number: P10895 Error Detect | REV

Date: | Sheet of