ERT SERVICE CHART

1919

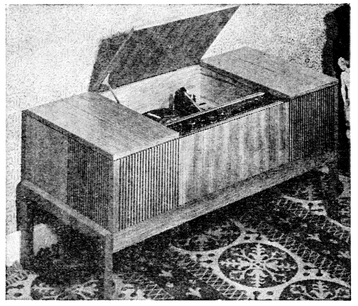

HMV 2419

'Stereomaster'

FM radiogram

Additional copies of this chart 25p, including postage. Payment with order please to E R T, Dorset House, Stamford Street, London SE1 9LU

This service chart is copyright. It is not to be resold or reproduced, in part or in whole, without permission.

THE HMV 2419 "stereomaster" differs from many of its rivals in that it is equipped with a decoder to enable it to receive stereo broadcasts.

Consisting of a BSR automatic deck, and transistor amplifier giving 8 watts per channel at a distortion factor of only 1 per cent, this model combines traditional styling with modern hi-fi reproduction.

Cabinet is available in either teak or American walnut and provision is made for tape playback, tape record, auxiliary use of the amplifier, and external aerial connection.

Mains. 220-250V AC 50Hz.

Wavebands. VHF/FM 87-98MHz.

Transistors

TR1	RF amp	RF9
TR2	Osc. and mixer	RF9
TR3	IF amp	RF7
TR4	IF amp	RF7
TR5	IF amp	RF7
TR6	IF amp	RF7
TR8	19kHz amp	AF1
TR9	Amp	AF18
TR10/11	Amp	AF18
TR12	Stereo switching	AF18
TR13	(lamp)	AF12A
TR14	AF amp	AF1
TR15	AF amp	AF1
TR16	AF amp	AF1
TR17	AF amp	AF1
TR18	AF amp	AF24
TR19	AF amp	AF24
TR24/25	AF amps	AF20
TR26/27	AF amps	AF22
TR28/29	Drivers	AF21
TR30/31	Drivers	AF23
TR32/33	Output	OP8B
TR34/35	Output	OP8A

Diodes

D1	RF tuning	D7
D2	Osc. tuning	D7
D3	—	D36
D4/5	Ratio det.	D1
D6	Overload	D1
D7/8	Detector diodes	D34
D9/10		
D11/12	—	D26
D13/14	—	D26
D15	Rectifier	4 × D15

Inductors

L1/2	Aerial transformer
L3	RF amp tuning
L4	Part 10·7MHz rejector
L5	Osc. tuning
L6/7	IF T1 (IF output)
L8/9	IF T2
L10/11	IF T3
L12/13	IF T4
L14/15	IF T5
L16/17	IF T6
L18/19	IF T7 (ratio det.)
L20/21	IF T8 (ratio det.)
L42	Low pass filter
L43	19kHz tuned collector coil
L44/5	Frequency doubler coil
L46/7	38kHz tuned transformer
T1	Mains transformer

Fuses

F1	315mA antisurge
F2	2A

Pilot lamp

PL1	14V 0·84W (mains indicator)
PL2	14V 0·84W (stereo indicator)

Decoder. Fitted.

Speakers

LS1/3	10ohm 6½in. round.
LS2/4	Tweeter 3⅜in. round.

Audio output. 8 watts per channel at < 1 per cent THD.

Aerials. Socket provided for external FM aerial.

Inputs. Tape playback (DIN), AM radio (3·5mm jack).

Outlets. Tape record, auxiliary, stereo headphones.

Record unit. BSR C142 autochanger.

Cartridge. Sonotone 3509.

Styli. Turnover type for 3509 cartridge.

Price. £94·30 inc. VAT.

Manufacturer. Thorn Consumer Electronics Ltd, 284 Southbury Road, Enfield, Middlesex.

RESISTORS

R1	2K2	1A	R31	5K6	2A	R71	150K	2C	R121	470	1B	R151	100K	1C	R181	12	1F	C15	47pF	2A	C69	10µF	2B	C105	3300pF	1B	C135	0·22µF	1F
R2	22K	1A	R32	470	2A	R72	39K	2C	R122	22K	1B	R152	100K	1C	R182	270	1F	C16	1000pF	2A	C70	2·2µF	2B	C106	1µF	1B	C136	1000pF	1D
R3	5K6	1A	R33	2K2	2A	R73	1K	2C	R123	22K	1B	R153	6K8	1C	R183	270	1F	C17	1000pF	2A	C71	315pF	2B	C107	1µF	1B	C137	1000pF	1F
R4	100	2A	R34	2K2	2A	R74	1K	2B	R124	1K	1C	R154	6K8	1C	R184	270	1E	C18	0·22µF	2A	C72	0·22µF	2B	C108	0·1µF	1C	C138	150µF	1D
R5	22K	2A	R35	22K	2A	R75	22K	2C	R125	1K	1C	R155	1K5	1C	R185	270	1E	C19	0·22µF	2A	C73	10µF	2B	C109	0·1µF	2C	C139	150µF	1F
R6	5K6	2A	R36	5K6	2A	R76	8K2	2C	R126	470K	2C	R156	1K5	1C	R186	0·68	1F	C20	2000pF	2A	C74	0·01µF	2C	C110	1000pF	1C	C140	50µF	1E
R7	2K2	2A	R37	470	2B	R77	1K	2C	R127	470K	1C	R157	1K8	2C	R187	0·68	1F	C21	0·01µF	2A	C75	9·01µF	2C	C111	1000pF	1C	C141	50µF	1E
R8	100K	2B	R38	2K2	2A	R78	5K6	2C	R128	100K	2C	R158	270K	1D	R188	0·68	1E	C22	0·01µF	2A	C76	0·01µF	2C	C112	10µF	1C	C142	200pF	1D
R9	100K	2A	R39	100	2B	R79	820K	2B	R129	100K	1C	R159	270K	1F	R189	0·68	1F	C23	4·7pF	2A	C77	1000pF	2C	C113	10µF	1C	C143	200pF	1F
R10	100K	2A	R40	100	2B	R80	820K	2B	R130	12K	2C	R160	180K	1D	R190	330	1F	C24	50pF	2A	C78	0·01µF	2B	C114	0·22µF	1C	C144	100pF	1D
R11	100	2A	R41	22K	2B	R81	47K	2B	R131	12K	1C	R161	180K	1F	R191	330	1E	C25	50pF	2A	C79	0·1µF	2C	C115	0·22µF	1C	C145	100pF	1E
R12	100K	2A	R42	5K6	2B	R82	47K	2B	R132	5K6	1C	R162	330K	1D	R196	2K7	2C	C26	10µF	2A	C81	7000pF	2C	C116	0·1µF	2C	C146	1000µF	1E
R13	12K	2A	R43	1K5	2B	R83	100K	1B	R133	5K6	1C	R163	330K	1F	R197	150K	—	C27	5000µF	2A	C82	1500pF	2B	C117	0·1µF	1C	C147	1000µF	1E
R14	5K6	2A	R44	470	2B	R84	100K	2B	R134	1K2	1C	R164	1K	1D	R198	150K	—	C28	0·01µF	2A	C83	0·1µF	2C	C118	1000pF	2C	C148	0·05µF	1E
R15	470	2A	R45	1K	2B	R85	5K6	2C	R135	1K2	1C	R165	1K	1F	R201	10	—	C50	90pF	2B	C84	0·1µF	2B	C119	1000pF	1C	C149	0·05µF	1E
R16	22K	2A	R46	1K	2B	R86	1K	2C	R136	22K	2C	R166	27	1D	**CAPACITORS**			C52	300µF	2C	C85	1000pF	2B	C120	1000pF	2C	C150	5000µF	1F
R17	5K6	2A	R47	5K6	2B	R87	470	2C	R137	22K	1C	R167	27	1F	C1	15pF	1A	C54	0·02µF	2B	C86	2000pF	1B	C121	1000pF	1C	C151	0·01µF	1F
R18	2K2	2A	R48	5K6	2B	R88	680	2C	R138	47K	1C	R168	1K5	1E	C2	47pF	1A	C56	0·01µF	2B	C87	1000pF	2B	C122	0·1µF	2C	C152	0·01µF	1F
R19	470	2A	R49	220K	2B	R89	2K2	2C	R139	1K	1C	R169	1K5	1F	C3	0·01µF	1A	C57	0·02µF	2A	C88	2000pF	2B	C123	0·1µF	1C	C153	0·01µF	1F
R20	5K6	2A	R50	100K	—	R110	1K	1B	R140	1K	2C	R170	1K5	1D	C4	1000pF	1A	C58	0·02µF	2A	C89	0·033µF	1B	C124	2200pF	1C	C154	0·01µF	1F
R21	5K6	2A	R51	100K	—	R111	1K	1B	R141	1M5	1C	R171	1K5	1F	C5	3·3pF	1A	C59	50pF	2A	C90	0·033µF	2B	C125	2200pF	1C	C155	300µF	2C
R22	470	2A	R52	100K	—	R112	3M3	2B	R142	1M5	2C	R172	1K5	1D	C6	3·3pF	2A	C60	0·022µF	1D	C96	5000pF	1D	C126	0·022µF	1C	C156	0·01µF	—
R23	470	2A	R53	100K	—	R113	3M3	2B	R143	470	1C	R173	1K5	1E	C7	30pF	2A	C61	50pF	1B	C97	5000pF	1D	C127	0·022µF	1C	C157	0·047µF	—
R24	470	1A	R54	150K	1A	R114	12K	1B	R144	470	2C	R174	1K8	1F	C8	600pF	2A	C62	2·7pF	2B	C98	0·01µF	1B	C128	0·01µF	1C	C160	100pF	1E
R25	470	2B	R55	3K3	2B	R115	12K	1B	R145	6K8	1C	R175	1K8	1F	C9	0·01µF	1C	C63	50pF	2B	C99	0·1µF	1B	C129	0·01µF	1C	C161	100pF	1E
R26	3K3	2A	R66	3K3	2B	R116	47K	1B	R146	6K8	1C	R176	1K	1F	C10	47pF	2A	C64	0·02µF	2B	C100	1000pF	1B	C130	0·1µF	1C	C162	100pF	1D
R27	2K2	2A	R67	2K2	2B	R117	47K	1B	R147	15K	1C	R177	1K	1F	C11	0·01µF	2A	C65	0·02µF	2B	C101	1000pF	1B	C131	0·1µF	1C	C163	100pF	1E
R28	1K2	2A	R68	8K2	2C	R118	100K	1B	R148	15K	1C	R178	12	1D	C12	3·3pF	2A	C66	30pF	2B	C102	0·22µF	1B	C132	0·1µF	1D	C164	100pF	1D
R29	100K	2A	R69	33K	2B	R119	100K	1B	R149	100K	1C	R179	12	1F	C13	2·2pF	2A	C67	600pF	2D	C103	0·22µF	1B	C133	0·1µF	1F	C165	100pF	1D
R30	22K	2A	R70	1K5	2C	R120	470	1B	R150	100K	1C	R180	12	1F	C14	30pF	2A	C68	600pF	2C	C104	3300pF	1B	C134	0·22µF	1D	C201	0·47µF	—

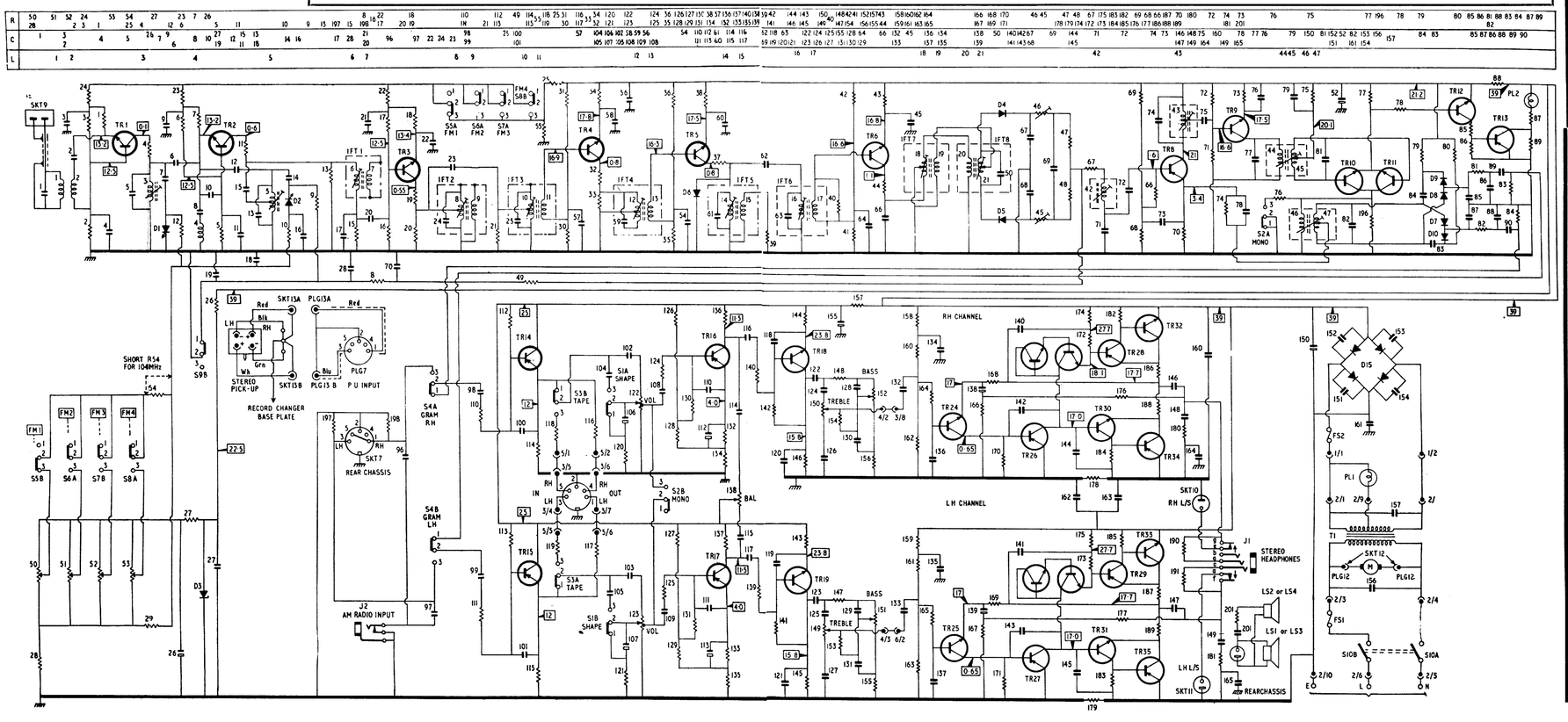

ERT SERVICE CHART 1919 HMV 2419

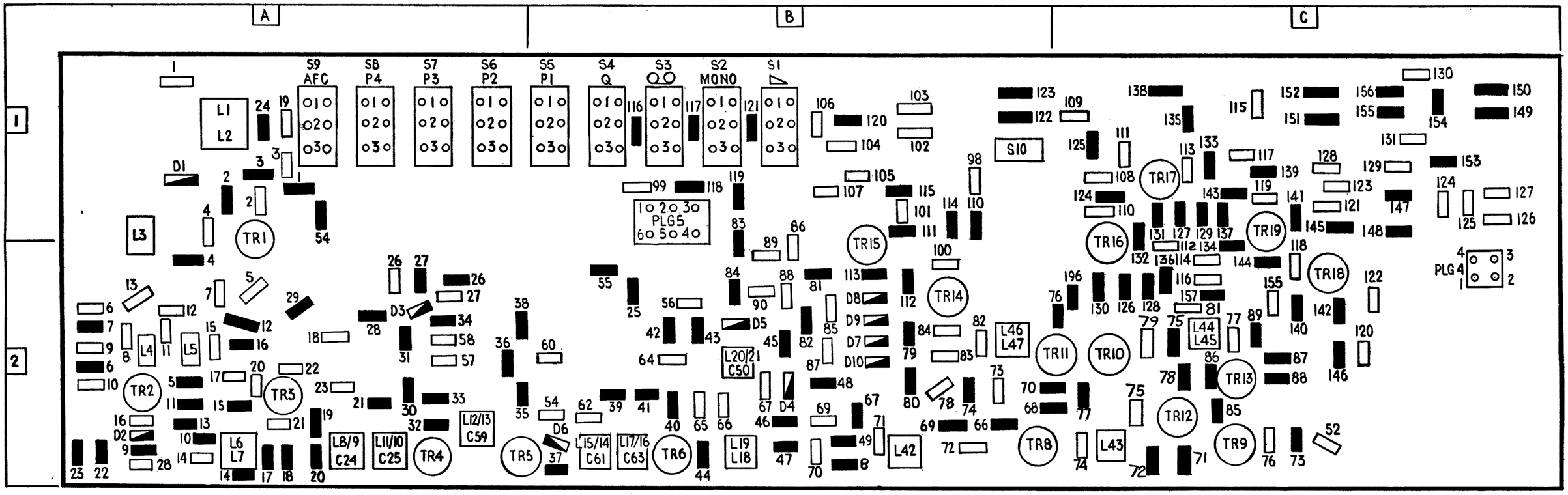

Service Depts.

London: PO Box 121, Lea Valley Trading Estate, Edmonton, N18 3BP. Tel: 01-807 3060.

Manchester: Thorn House, Derby Street, Cheetham, Manchester 8. Tel: 061-832 2499.

Glasgow: 155 Shieldhall Road, Glasgow SW1. Tel: 041-882 4512.

SERVICE NOTES

DC voltages, shown in squares on the circuit diagram, were taken relative to each transister emitter supply line (except where otherwise indicated) under quiescent conditions, with a 20,000ohm/volt meter.

Replacement transistors and diodes are obtainable from service dept. and suitable Mullard types are listed below:—

RF9	BF195
RF7	BF194
AF1	BC187
AF18	BC148
AF24	BC149
D1	OA90
D15	BY126

PRELIMINARY AUDIO CHECKS

By placing a 10ohm impedance output meter in place of each speaker unit, or by connecting a 'scope across each unit; examine the waveform. This should be symmetrical and without any undue noise.

Output check

Switch to gram. and mono; set volume to maximum treble, bass and balance to their mid-positions and set the "shape" switch to off.

Inject a 1kHz audio signal to left- or right-hand pickup input (SKT7), adjusting signal from generator to provide 8 watts output per channel—input level should be approx. 50mW and only slight adjustment of the balance control should be required to bring about equal outputs from both channels.

Individual checks for both channels can be made by returning the mono switch to stereo and connecting generator lead to left-hand then right-hand inputs.

Tone controls check

With test conditions as above, retard volume control by 30dB. Inject a 100Hz audio signal and turn bass from min. to max.

A variation of +10dB and −13dB should be noted. Depress "shape" switch and note that output level increases by 8dB; return "shape" switch to off.

Similarly inject a 10kHz audio signal and turn treble control from min. to max. A variation of +14dB and −16dB should be observed. Again depress "shape" switch and check that level increases by 8dB.

Tape input and output

With controls as in "output check," depress tape switch and inject 1kHz audio signal between contacts 2 and 3 of SKT8 (tape socket), adjust input signal to obtain 8 watts on output meter. (It should be approx. 500mV.)

Transfer generator to pins 5 and 2 and similarly check other channel. Now switch to VHF and inject a 25kHz deviation signal (up to limiting level) into the VHF aerial socket.

An output of 100mV at pins 4 and 2 and 1 and 2 should be observed.

Radio input

Check that the output level is 8 watts when a 1kHz 30mV signal is injected to the radio socket (J2).

ALIGNMENT

Before commencing the alignment procedure make sure that the volume control is at maximum, balance control set midway, and bass and treble at minimum.

During alignment adjust the input signal

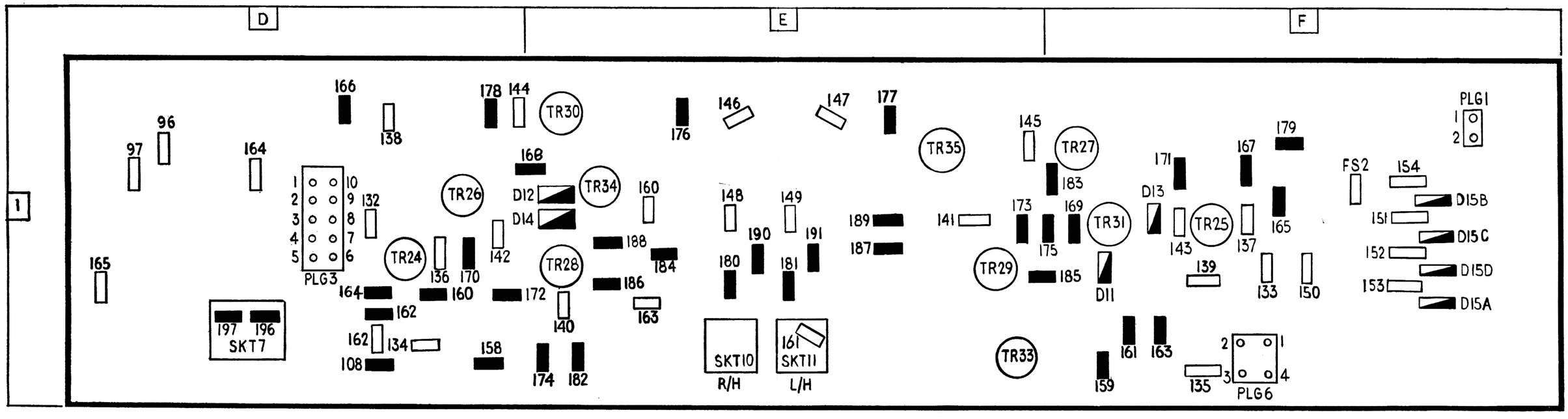

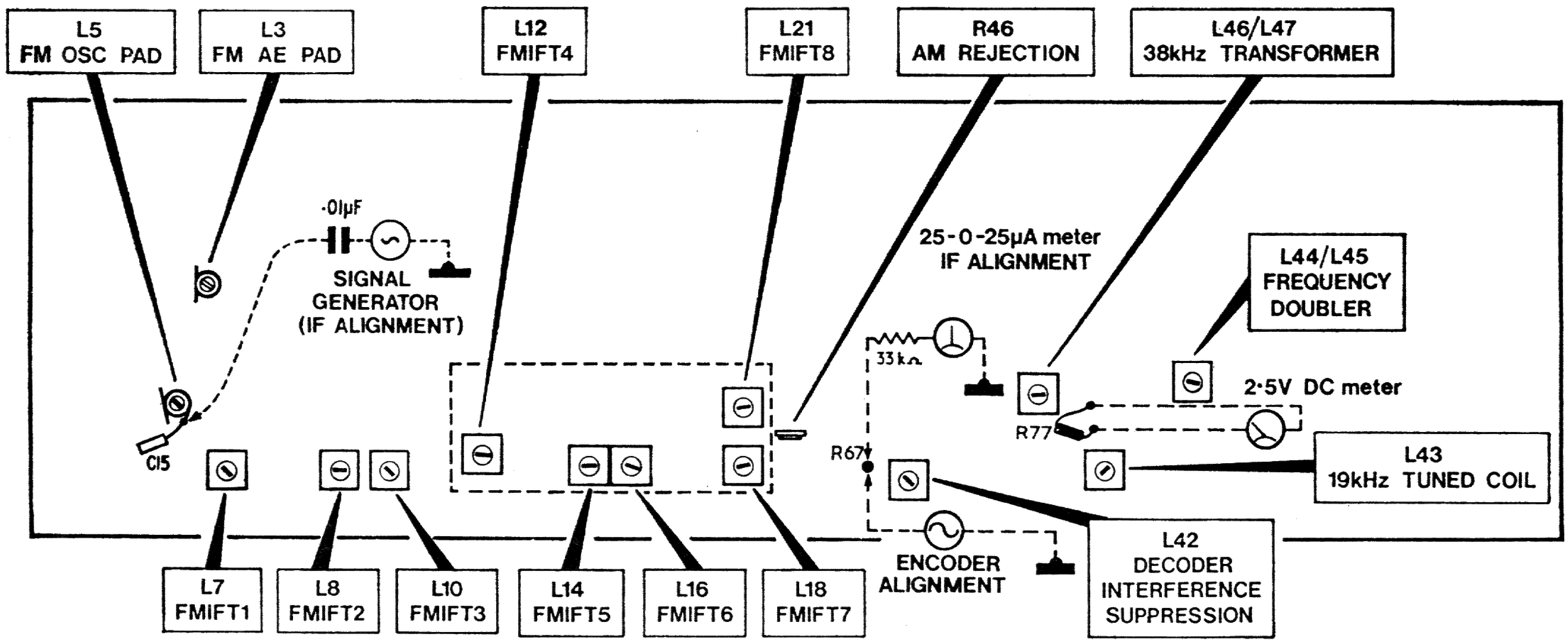

Above: Alignment diagram

so that an output of 1 watt is maintained.

IF

To obtain good operation of the AFC, the discriminator circuit should be properly balanced.

This is achieved by measuring the voltage between junction of R47/R48 and chassis.

As the voltage swings alternately positive and negative, a centre zero meter (25-0-25μA) with a 33kohm resistor will provide a satisfactory means of measurement.

Using a signal generator providing band II coverage, 10·7MHz AM (30 per cent modulation) and 10·7MHz (25kHz deviation) signals at an impedance of 75ohms, press one of the four station selector buttons and allow the receiver and test equipment to warm up.

Inject a 10·7MHz FM signal via a 0·01μF capacitor between junction of C15/L5 and chassis.

Adjust L18, L16, L14, L12, L10, L8, L6 for maximum output at speaker terminals.

Increase FM signal by 20dB, to ensure limiting and back off volume control to obtain 1 watt output.

Adjust L21 for zero on centre-zero meter.

Switch now to 10·7MHz AM and adjust R46 for minimum output.

Ideally maximum FM output should coincide with "O" on the centre-zero meter; failing this, a zero reading should be obtained at the expense of a slight loss of FM output.

A check of balance can be made by swinging the signal generator either side of 10·7MHz, when the centre zero meter should show a similar deflection to positive and negative.

FM RF

Select No. 1 station selector button and inject a 92MHz FM signal into the FM aerial socket.

Tune No. 1 tuning control to 92MHz mark and adjust L5 and L3 for maximum output.

Check AFC action by increasing signal level by 20dB and slightly off-tune 92MHz on scale. By depressing the AFC button the signal should come back on tune.

Check calibration at 88MHz and 96MHz.

Stereo decoder

Alignment should only be attempted if the following piece of equipment is available:

Encoder—giving 19kHz pilot tone (crystal controlled), providing also a difference signal, a sum signal and an easily identifiable left and right-hand signal.

These signals should be available as a multiplex audio output and also as modulation of a VHF signal.

In order to begin the alignment the IF and RF procedures should first of all be dealt with. Now connect a test meter on 2·5V DC across R77.

If cores have been seriously mistuned or coils replaced, a preliminary alignment of L43 and L44/L45 should be made. Depress "mono" button and inject a 20mV, 19kHz pilot signal to R67 and tune L43 and L44/L45 for maximum output on test meter (approx. 0·5V). If, however, the coils are known to be "near" tuning point, the test meter should be connected as before and an output meter to each channel (assuming audio circuits are operating OK).

Set encoder now to VHF, output 1mV with "composite sum" signal modulation.

This signal is to be used to ensure accurate tuning of receiver to test signal. It is therefore injected into the FM aerial socket and the receiver carefully tuned with AFC off.

When tuning is accomplished, AFC can be switched on to ensure that signal remains in the IF pass band during decoder alignment.

Depress "mono" button and peak L43 and L44/L45 for maximum reading (approx. 1·0V).

Release "mono" button and switch encoder to "difference" signal, then peak L46/L47 for maximum audio output.

Switch encoder to left-hand signal and tune L42 for minimum right-hand output i.e. minimum cross-talk.

Check right-hand signal and cross-talk and check that outputs are balanced ±1dB with "difference" signal modulation.

Above left: RF-IF-AF amplifier board.

Left: Pre-amp and power output board.

BE IN THE KNOW

E R T provides the latest news about products, events and technical developments in the radio and electrical industry.

Service managers and engineers can have E R T delivered to their home address each week. Annual subscription is £5·55 which includes weekly service chart supplements, servicing directory, spring and autumn price lists, hi-fi, lighting and electrical contracting sections, etc.

As E R T is supplied to the trade only, orders should be accompanied by your firm's letter head or a trade card. Send to Subscription Dept., Oakfield House, Perrymount Road, Haywards Heath, Sussex.

www.hifiengine.com