SERVICE AND TECHNICAL MANUAL

MODELS

FIVE TWENTY FIVE THIRTY

MULTIPLEX BOARD

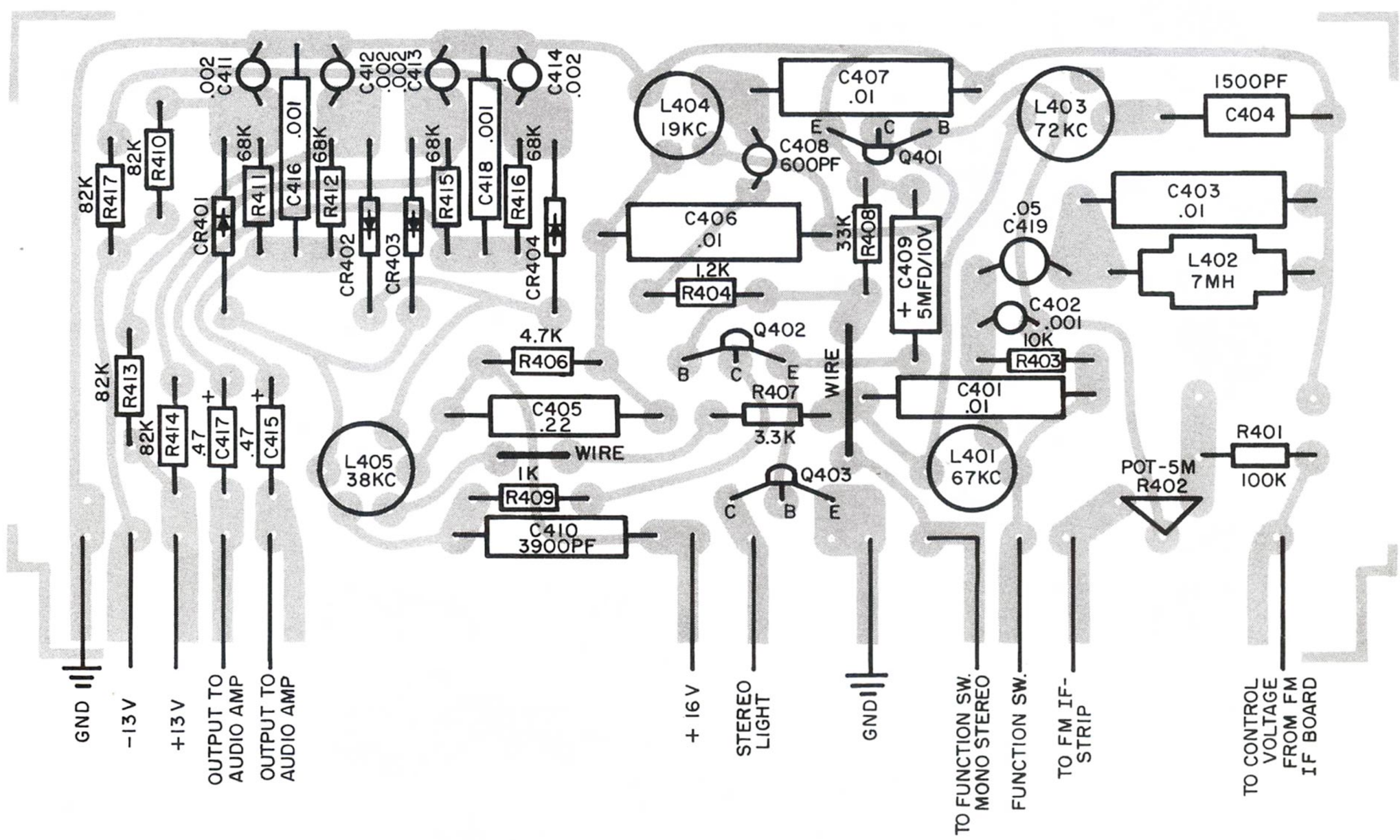

PRE AMP BOARD

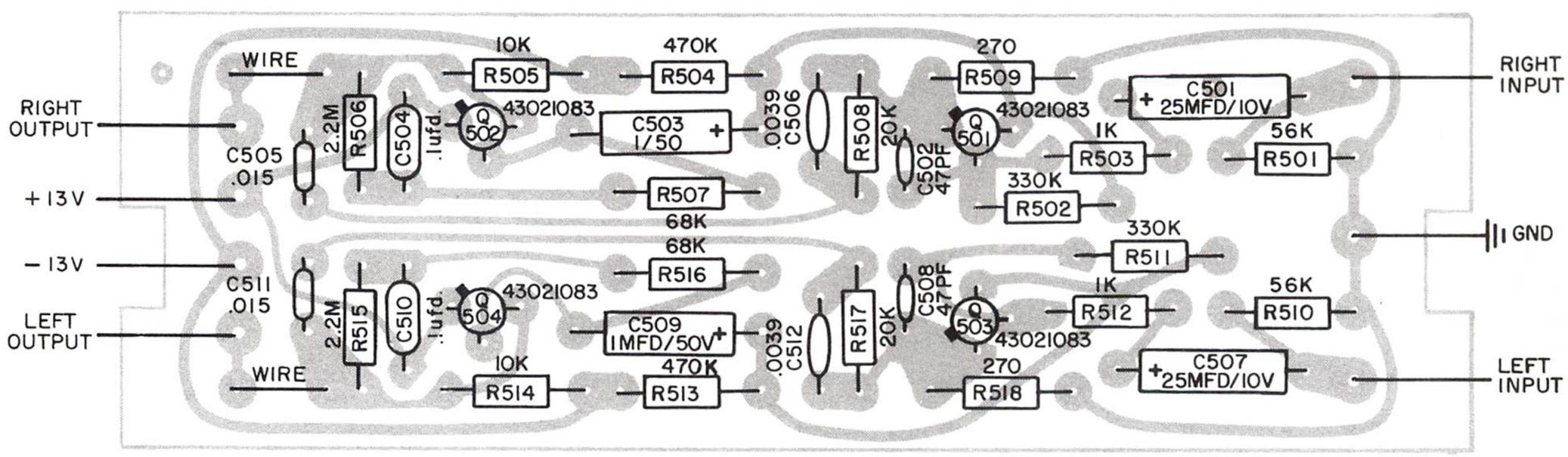

harman kardon
INCORPORATED
55 AMES COURT, PLAINVIEW, N. Y. 11803

ALIGNMENT PROCEDURES

Do not attempt alignment unless the following equipment is available.

EQUIPMENT DESCRIPTION

1. FM Signal Generator
2. Oscilloscope
3. AC VTVM
4. Audio Generator
5. Multiplex Stereo Generator
6. AM Signal Generator

RF AND IF ALIGNMENT

Function Selector In FM STEREO

STEP	CONNECT SIGNAL GENERATOR	GENERATOR FREQUENCY	DIAL SETTING	OUTPUT INDICATOR	ADJUST	ADJUST FOR	NOTES
1	Connect Generator Through a Dummy Antenna 120Ω Resistor On The Hot Side & a 150Ω Res. On The Ground Side) To The Antenna Terminals.	90 MC 400 CPS MOD 75 KC Deviation	90 MC	[1]Scope at Tape Output Jack [2]D.C.V.T.V.M. @ Collector of Q401 to Ground.	T101—Antenna Coil L101—2nd RF Coil T102—1st IF Primary & Sec. L301—2nd IF L302—3rd IF Primary & Sec.	Maximum DC Output at Collector of Q401	Adjust Input Level of Generator for approx. 4VDC at the collector of Q401. Adjust Generator Freq. for a max. DC at this point. Readjust Gen. Output for 4 Volts.
2	Same as Above	106 MC 400 CPS MOD 75 KC Deviation	106 MC	Same as Above	C102—Antenna Trimmer C110—RF Trimmer		Maintain low enough Input at the Gen. so that approx. 4V is at collector of Q401.
3	Same as Above	106 MC 400 CPS MOD 75 KC Deviation	106 MC	Same as Above	C116—OSC. Trimmer Adjust ONLY If Calibration Error is Noted L102—OSC. Coil	Generator Freq. and Dial Setting to be the same. Adjust C116 @ 106 MC and L102 @ 90 MC for correct Dial Calibration	At this point, the Gen. Freq. & the Dial Setting should be the same. If a difference is noted adjust C116 @ 106 MC and L102 @ 90 MC until Dial Calibration & Gen. Freq. agree.
		90 MC 400 CPS MOD 75 KC Deviation	90 MC				
4	Same as Above	No Signal Input	Tune to Noise at Either Extreme of the Band.	Tunning Meter on Front Panel	L303—Ratio Detector	With Secondary (Top Slug) removed, adjust Primary Slug for Maximum Tuning Meter Deflection	After Primary (Bottom Slug) is adjusted for max. Meter Deflection, replace Primary Slug and adjust for Zero Center on Tuning Meter.

MULTIPLEX ALIGNMENT PROCEDURE

Function Selector In FM STEREO

STEP	CONNECT SIGNAL GENERATOR	GENERATOR FREQUENCY	DIAL SETTING	OUTPUT INDICATOR	ADJUST	ADJUST FOR	NOTES
1	Junction of R403, C401, and L401	Audio Generator 67 KC	—	AC VTVM at junction of C405, R406, C406 and L404	67 KC Coil L401	Minimum	FM Stereomatic Mode
2		Audio Generator 72 KC			72 KC Coil L403	Minimum	Same as Above
3	Antenna Terminals through dummy Resistor	100 MC Modulated 100% by Stereo MPX Generator	100 MC	VTVM at collector of Q401	Stereomatic Bias Adjust R402	10V DC	FM Stereomatic Mode
4	Same as Above	Same as Above	Same as Above	Scope at 38 KC Transformer Secondary Junction of L405 and CR401	Top and bottom of 19 KC Coil, L404 and L405	Maximum Amplitude on Scope	Stereo Indicator should be lit after this adjustment.
5	Same as Above	Same as Above	Same as Above	Scope at Tape Output Jack, Minimum Channel	38 KC Transformer L405	Minimum in Unmodulated Channel	Maximum separation should now be achieved between channels.

www.hifiengine.com

AM ALIGNMENT PROCEDURE

STEP	DIAL SETTING	GENERATOR	INDICATOR	ADJUST	ADJUST FOR
1	Quiet point in band	455 KC 400 Hz Modulation	Scope at Tape Out	L202 (1st IF) L203 (2nd IF)	Maximum
2	600 KC	600 KC 400Hz Modulation	Scope at Tape Out	L204 (Osc. Coil)	Maximum
3	600 KC	600 KC 400 Hz Modulation	Scope at Tape Out	L201 (RF Trans.) Loopstick Ring	Maximum
4	1400 KC	1400 KC 400 Hz Modulation	Scope at Tape Out	C219 (Osc. Trimmer)	Maximum
5	1400 KC	1400 KC 400 Hz Modulation	Scope at Tape Out	C217 (Ant. Trimmer) C218 (RF Trimmer)	Maximum
6	Repeat	Steps 3 & 5	Scope at Tape Out		

a) All frequencies 30% modulated.
b) Couple signal loosely by means of one turn loop on generator cable.
c) Use lowest signal for useable indication.

REPLACEMENT PARTS LIST — FIVE-TWENTY FIVE-THIRTY

TRANSFORMERS & COILS

Part #	Description	List Price
10121417	Transformer, Power	$15.20
10521770	Transformer, Driver	5.00
11022869	Transformer, FM IF Input	1.65
11022870	Transformer, FM Interstage	1.75
11022871	Transformer, Ratio Detector	1.90
12021329	Coil, 7 MH, Mx Board	.60
12021765	Coil, 67KC, Mx. Board	1.10
12021766	Coil, 71 KC, Mx. Board	1.15
12021767	Coil, 19 KC, Mx. Board	1.55
12021768	Coil, 38 KC, Mx. Board	1.50
	DIODES	
41522875	Diode, 1N542 (Matched Pair)	.60
41622859	Diode, Silicon (AM Board)	.75
41020618	Diode, 2A 100V	.48
42020737	Diode, Zener 1W 10V 10%	1.25
41021007	Diode, IRC, 10D2	.80
	CAPACITORS	
31522951	Lytic, 500 MFD/500 MFD @ 50V	2.35
31522950	Lytic, 3000 MFD @ 30V	2.95
31521673	Lytic, 500 MFD @ 25V	1.10
31522112	Lytic, 1000 MFD @ 35V	1.70
31521608	Lytic, 500 MFD @ 15V	.75
31521331	Lytic, 200 MFD @ 6 V	.40
31521223	Lytic, 400 MFD @ 15V	.65
	CONTROLS	
23522862	Control, 47K, Amprex	.45
23521828	Control, 5 Meg.	.75
22021928	Control, Loudness	4.60
22021930	Control, Bass & Treble	2.00
22021929	Control, Balance	2.00
23522116	Control, 250K (Tone Control Bd.)	.75
23522872	Control, 1 Meg. (Driver Board)	.75

TRANSISTORS

Part #	Description	List Price
43021083	Transistor, GE 3391A	.80
43021017	Transistor, GE 3391	.75
43020418	Transistor, RCA 2N2147	4.75
43122874	Intergrated Circuit	6.00
43020731	Transistor, RCA 2N3053	2.45
43021198	Transistor, RCA 40232	1.80
	MISCELLANEOUS	
24022810	Speaker Selector Switch	2.45
25522547	Rocker Switch	.85
46512117	Pilot Bulb (Meter) #1847	.20
46522250	Stereo Lamp	.65
45013895	Fuse 2.5 Amp. 3AG	.15
46522834	Lamp 6.3V	.75
00322968	Waller FM Front End	27.85
36718178	.5 Ohm 5W 5% Resistor	.30
	REPLACEMENT PARTS LIST — 520 ONLY	
24021618	Function Switch	2.45
12522981	Tuning Meter	4.95
	REPLACEMENT PARTS LIST — 530 ONLY	
24021751	Function Switch	5.45
12522839	Tuning Meter	4.95
20522960	Loopstick (AM)	2.20
30822780	AM Gang PC Type	5.75
23522862	Pot 47 K (AM Board)	.45
11018565	Transformer, RF (AM Board)	1.45
11018566	Transformer, 1st IF (AM Board)	.80
11018567	Transformer, 2nd IF (AM Board)	1.25
12022767	Coil, Oscillator (AM Board)	.90
43022134	Transistor, (F.E.T.)	8.75
43022860	Transistor, 2N3835	.85
43022861	Transistor, 2N3859	.80

NOTE: To speed handling of your order be sure to include both the model and serial numbers which appear at the back of the chassis, in addition to the quantity, part number and part description of the items ordered. Orders from independent dealers, independent servicemen, and retail customers will be shipped on a C.O.D. basis. Harman-Kardon reserves the right to substitute equivalent parts for those originally installed in this chassis. All parts should be ordered from Harman-Kardon, Plainview, L.I., N.Y., Att: Parts Department. All prices are subject to change without notice.

www.hifiengine.com

TONE CONTROL BOARD

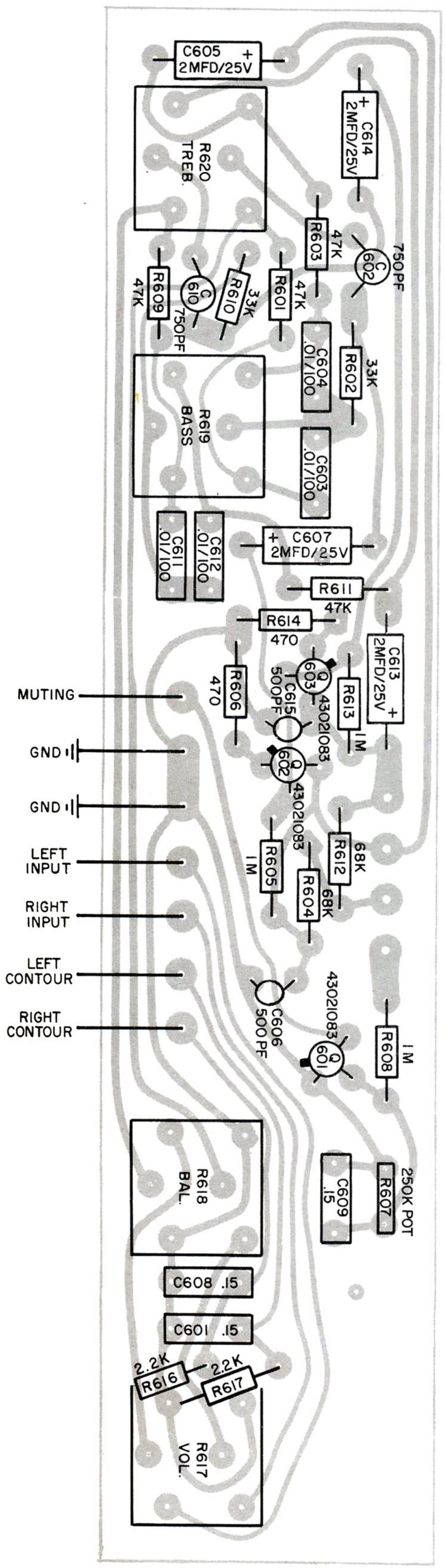

AM BOARD

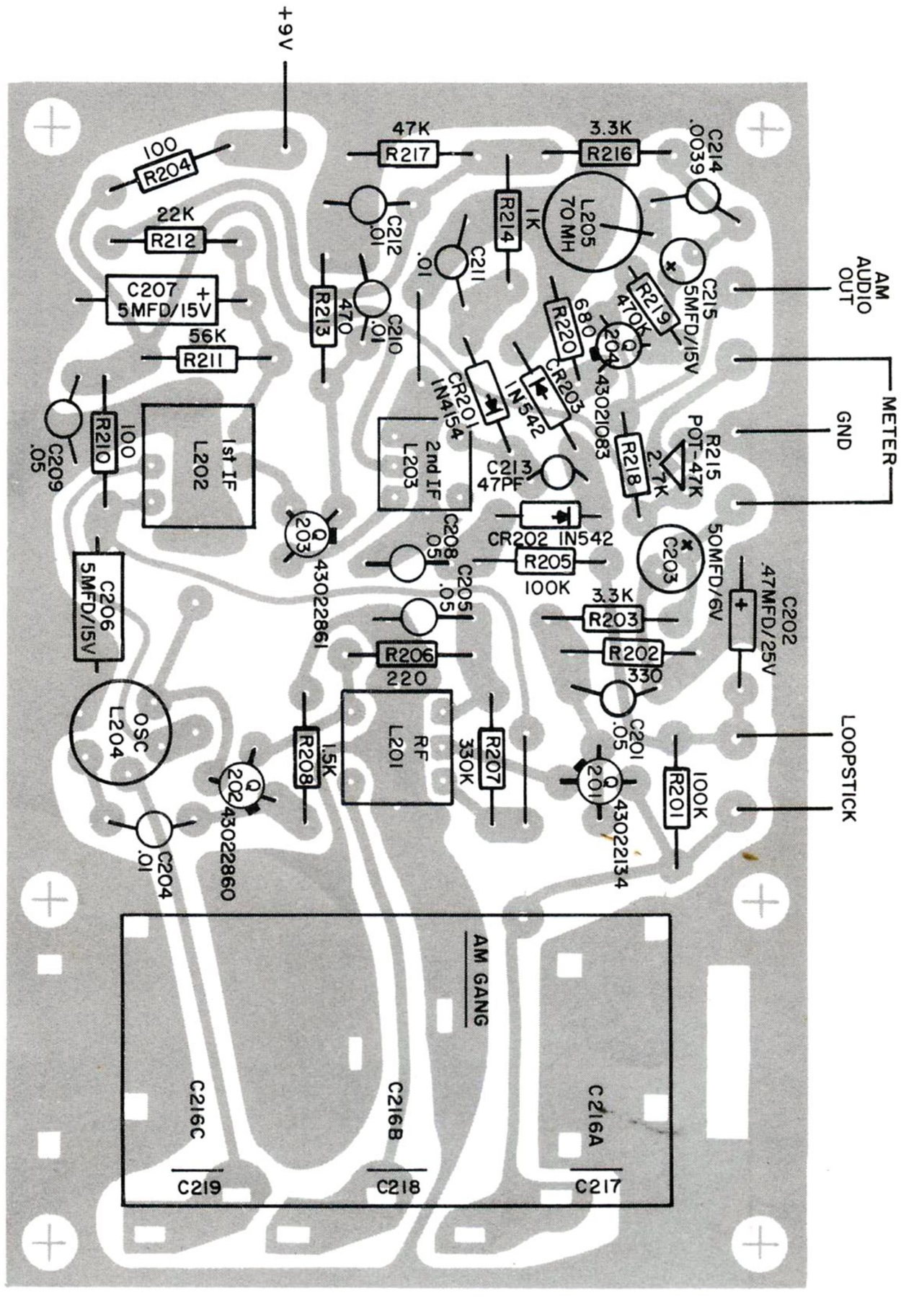

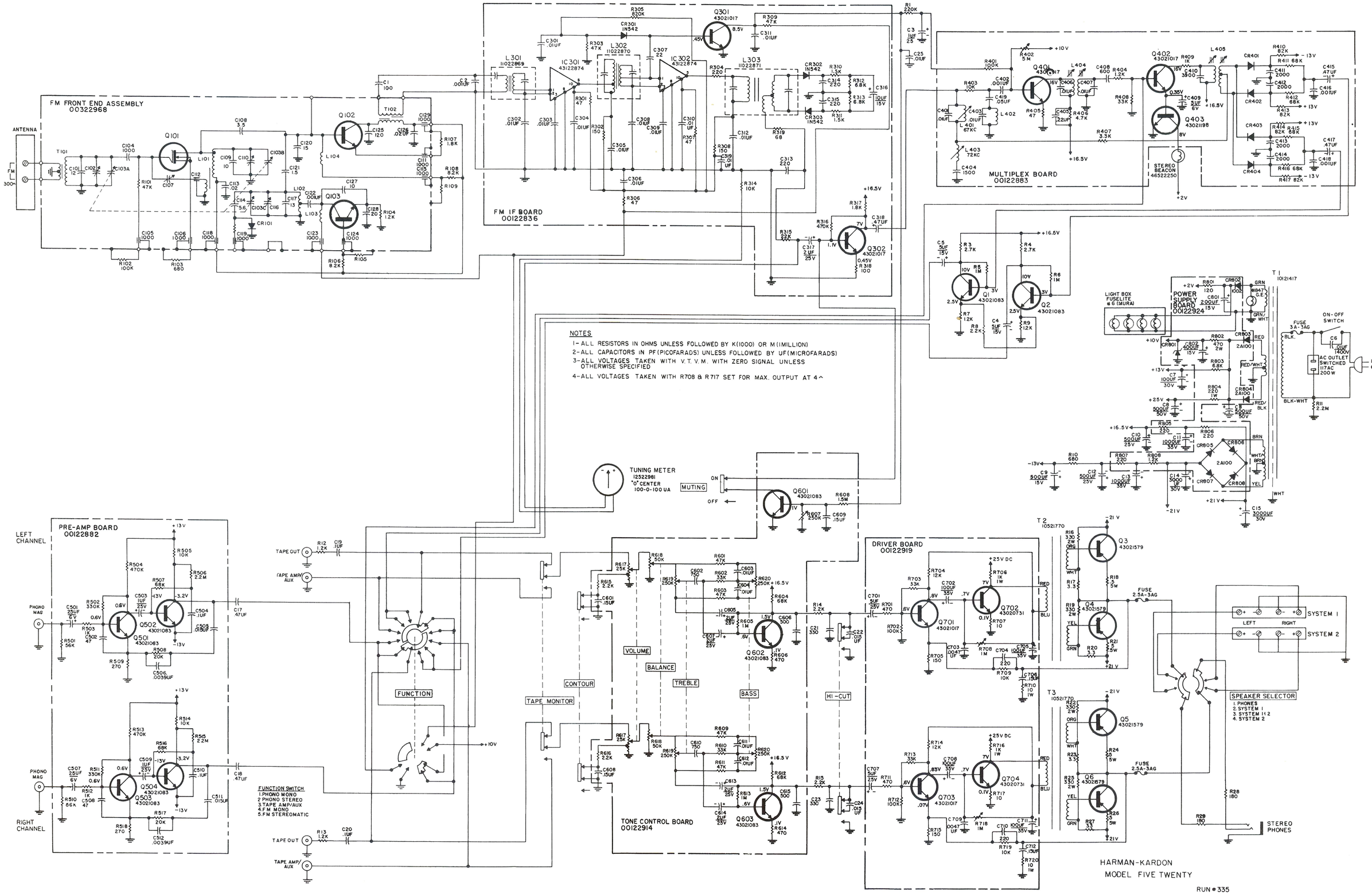

NOTES

1- ALL RESISTORS IN OHMS UNLESS FOLLOWED BY K(1000) OR M(1MILLION)
2- ALL CAPACITORS IN PF(PICOFARADS) UNLESS FOLLOWED BY UF(MICROFARADS)
3- ALL VOLTAGES TAKEN WITH V.T.V.M. WITH ZERO SIGNAL UNLESS OTHERWISE SPECIFIED
4- ALL VOLTAGES TAKEN WITH R708 & R717 SET FOR MAX. OUTPUT AT 4^

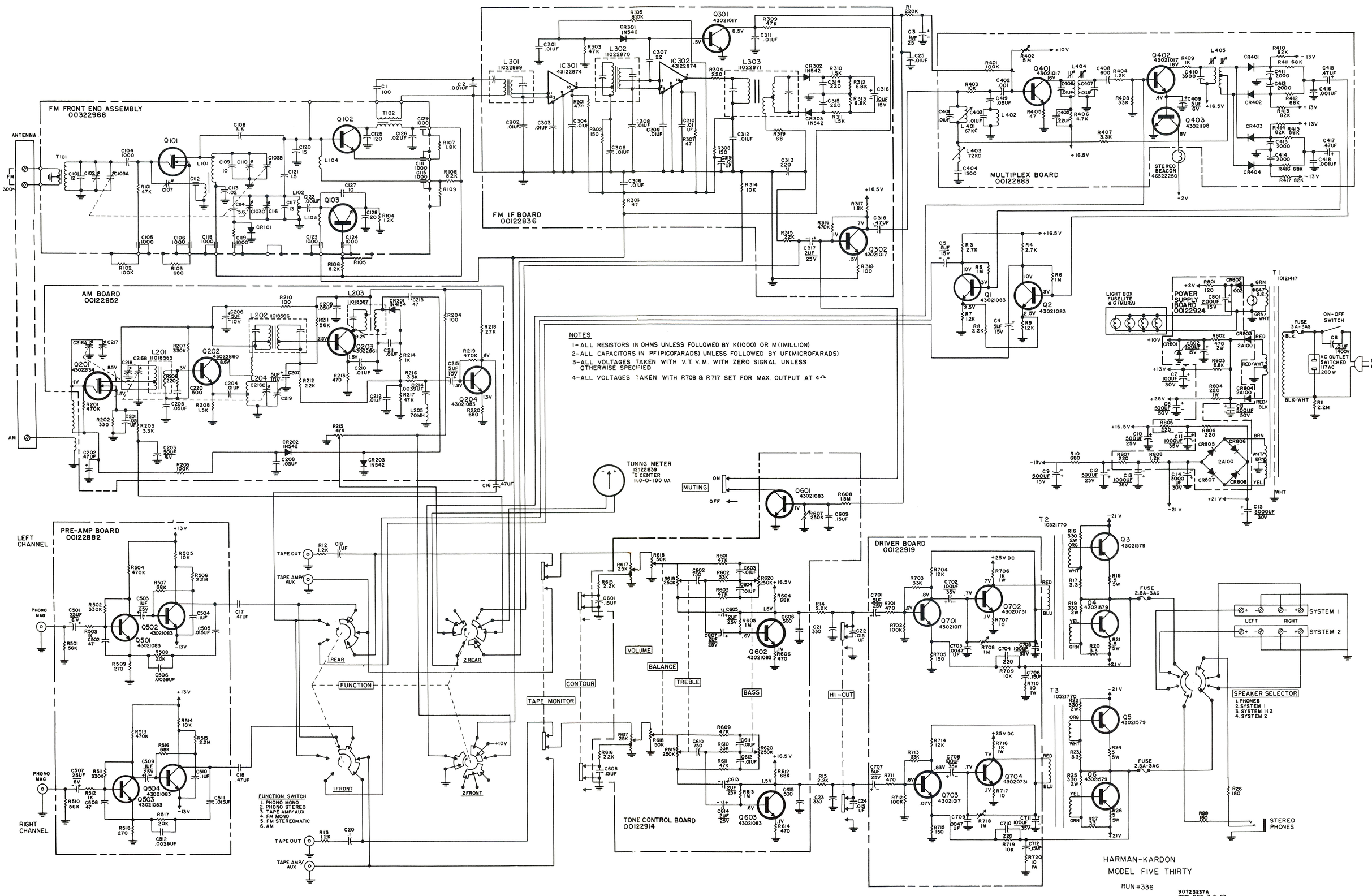

NOTES

1- ALL RESISTORS IN OHMS UNLESS FOLLOWED BY K(1000) OR M(1MILLION)

2- ALL CAPACITORS IN PF(PICOFARADS) UNLESS FOLLOWED BY UF(MICROFARADS)

3- ALL VOLTAGES TAKEN WITH V.T.V.M. WITH ZERO SIGNAL UNLESS OTHERWISE SPECIFIED

4- ALL VOLTAGES TAKEN WITH R708 & R717 SET FOR MAX. OUTPUT AT 4Ω

STRINGING DIAGRAM

FIVE-TWENTY

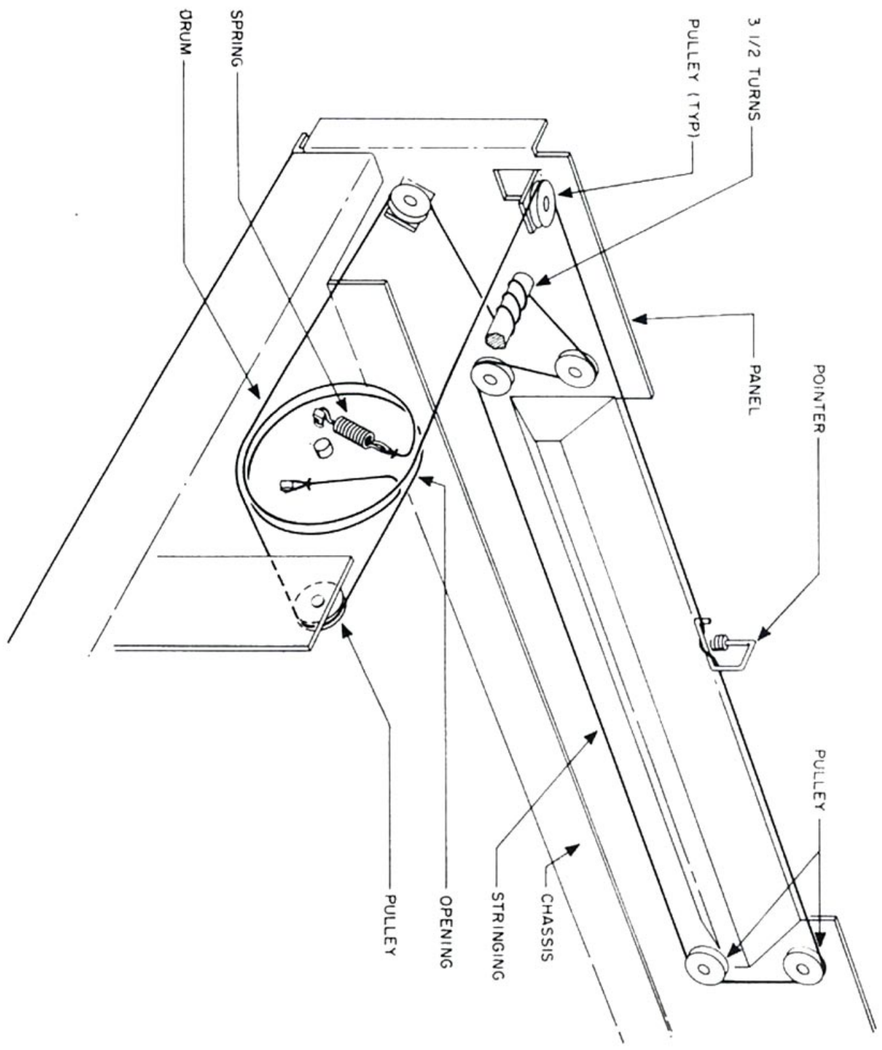

CHASSIS LAYOUT

FIVE-TWENTY

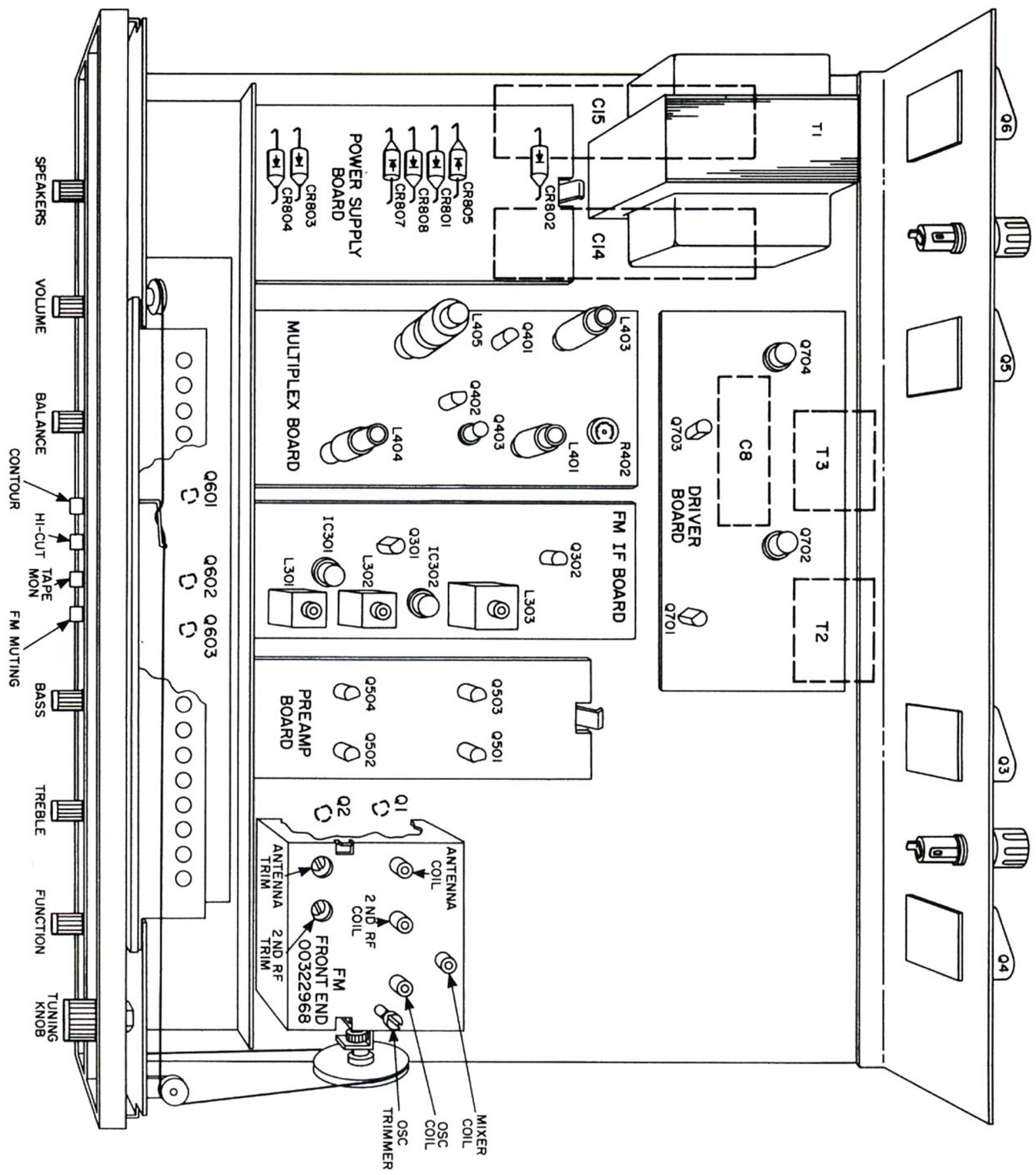

STRINGING DIAGRAM

FIVE-THIRTY

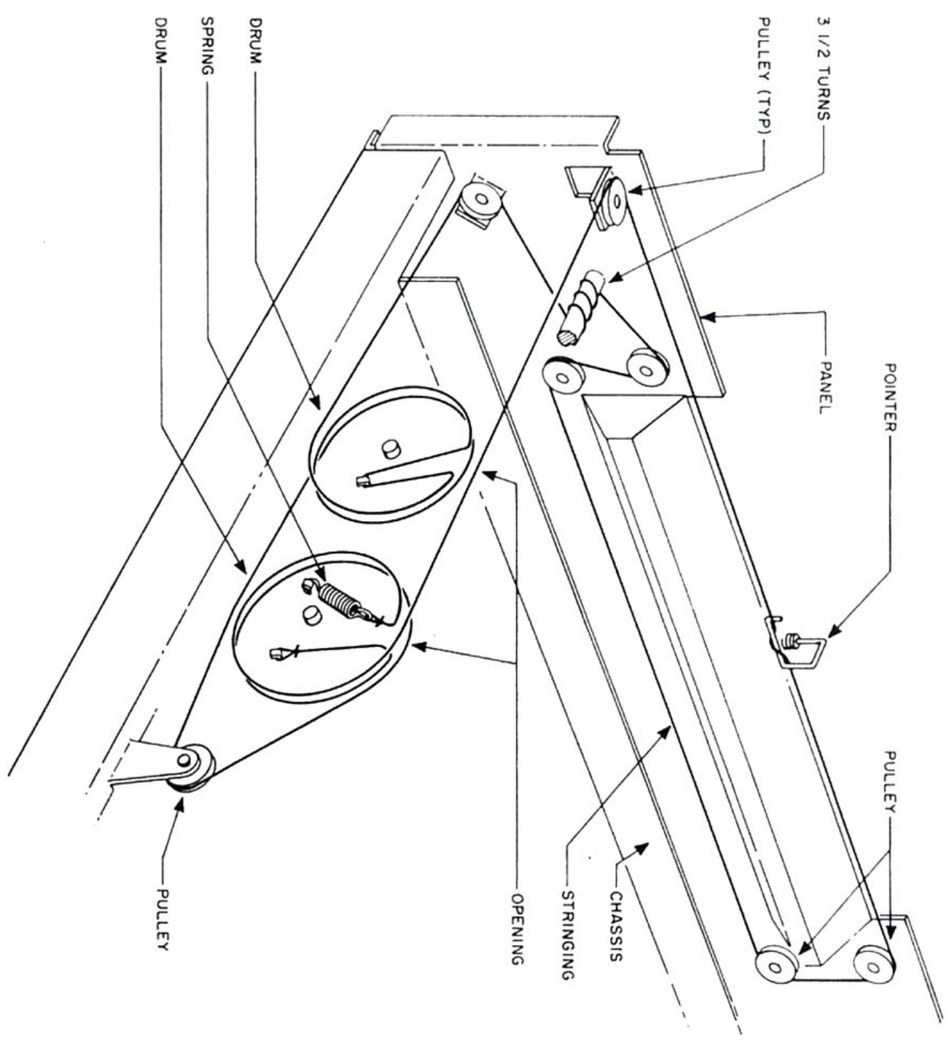

CHASSIS LAYOUT

FIVE-THIRTY

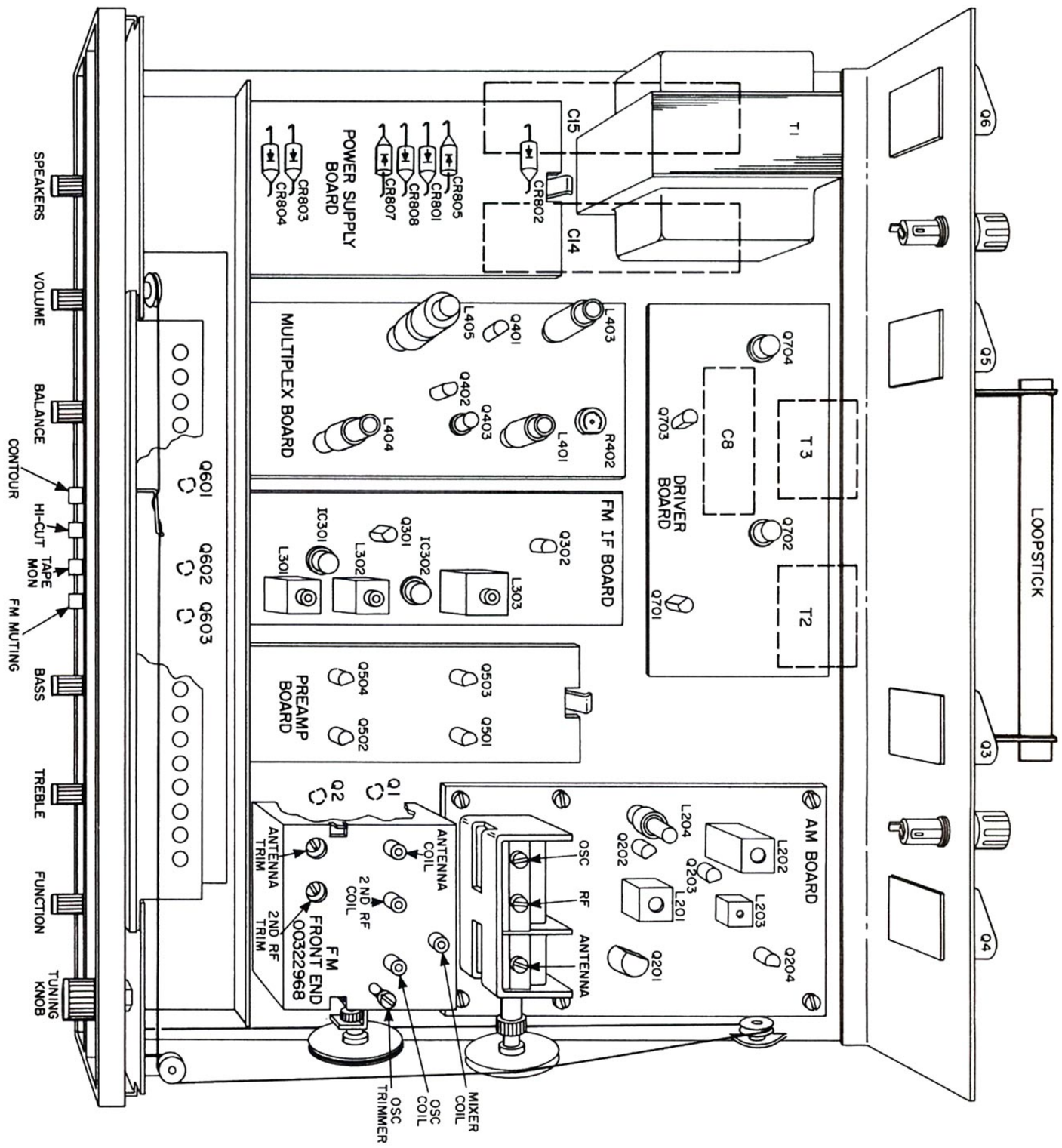

www.hifiengine.com

FM IF BOARD

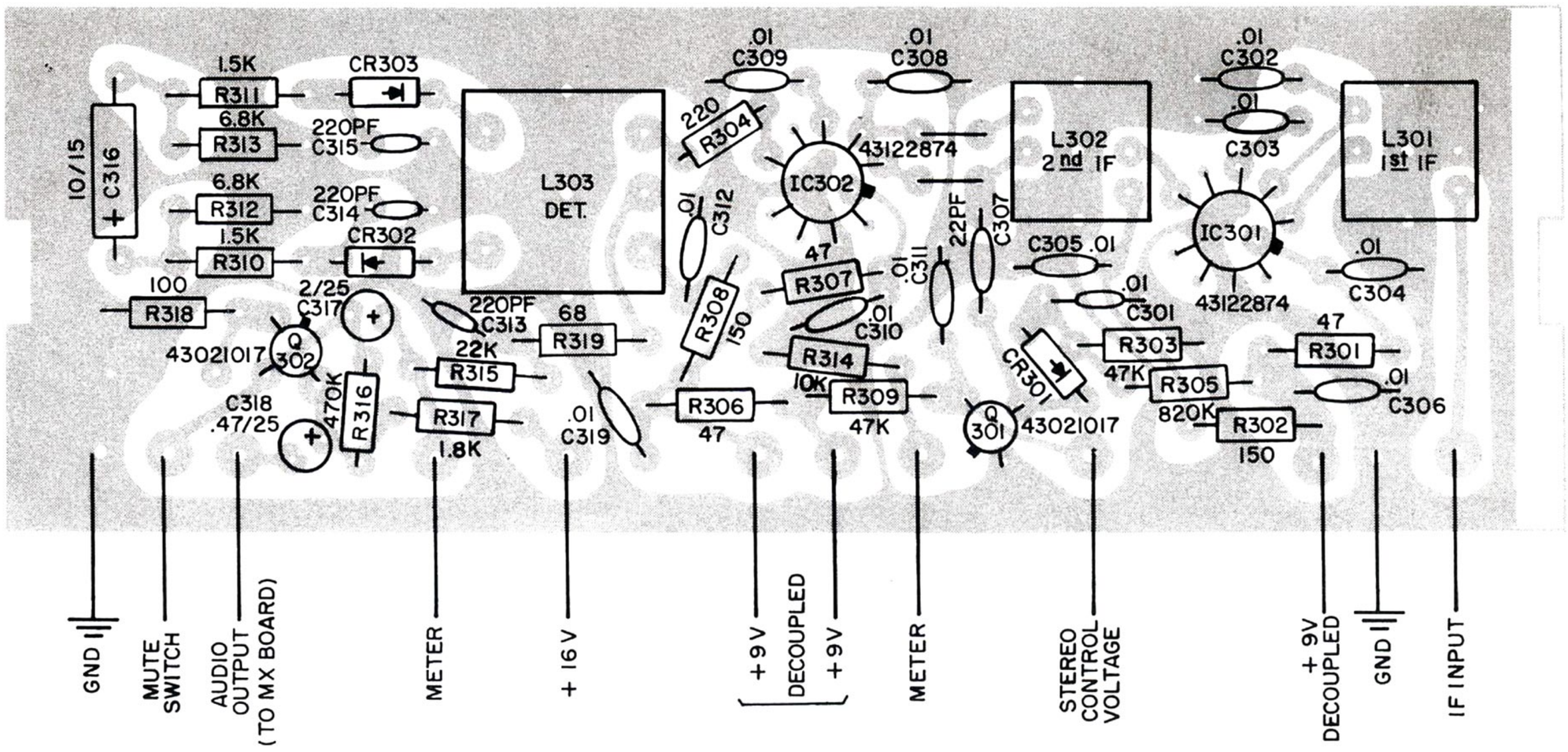

DRIVER BOARD

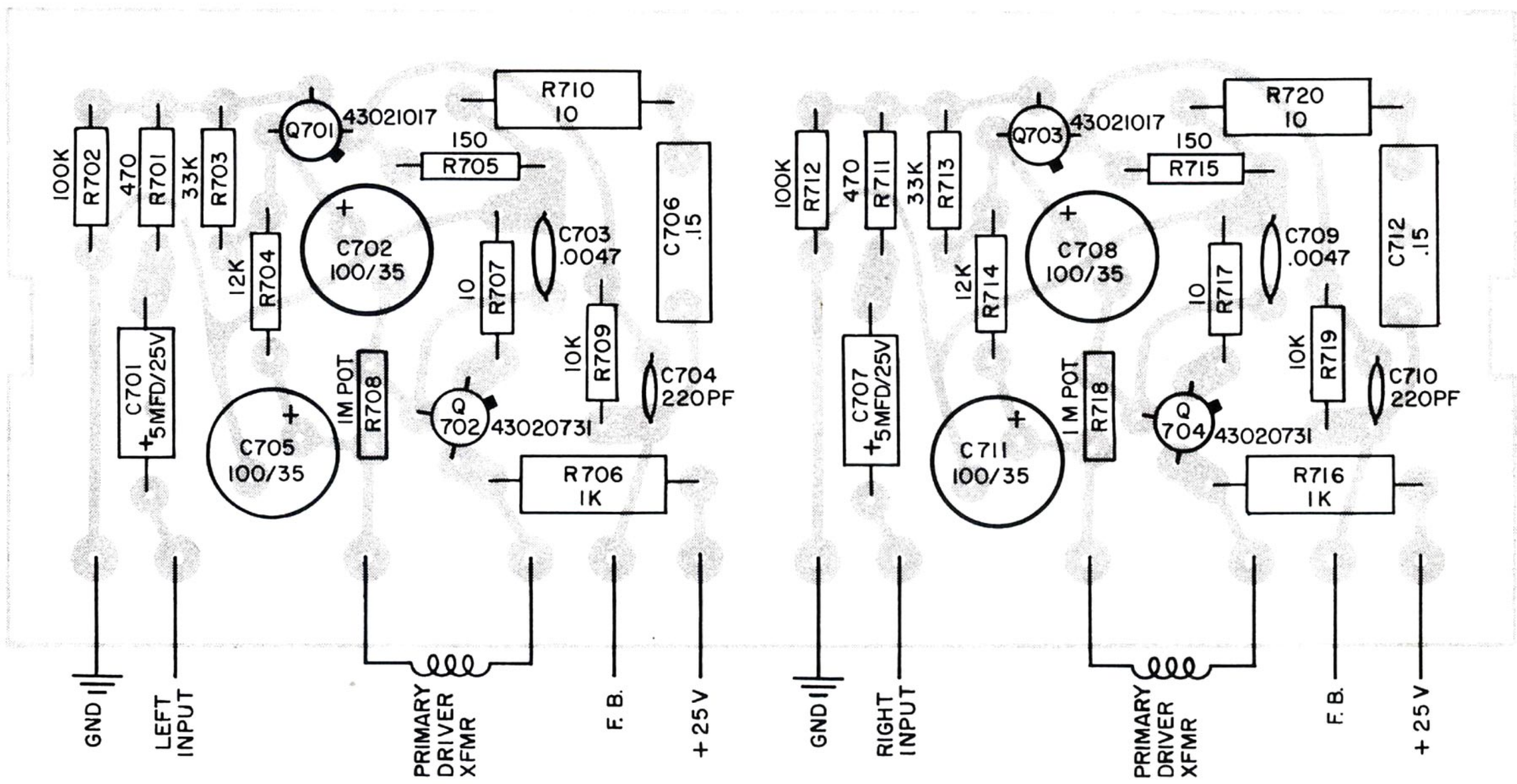

POWER SUPPLY BOARD

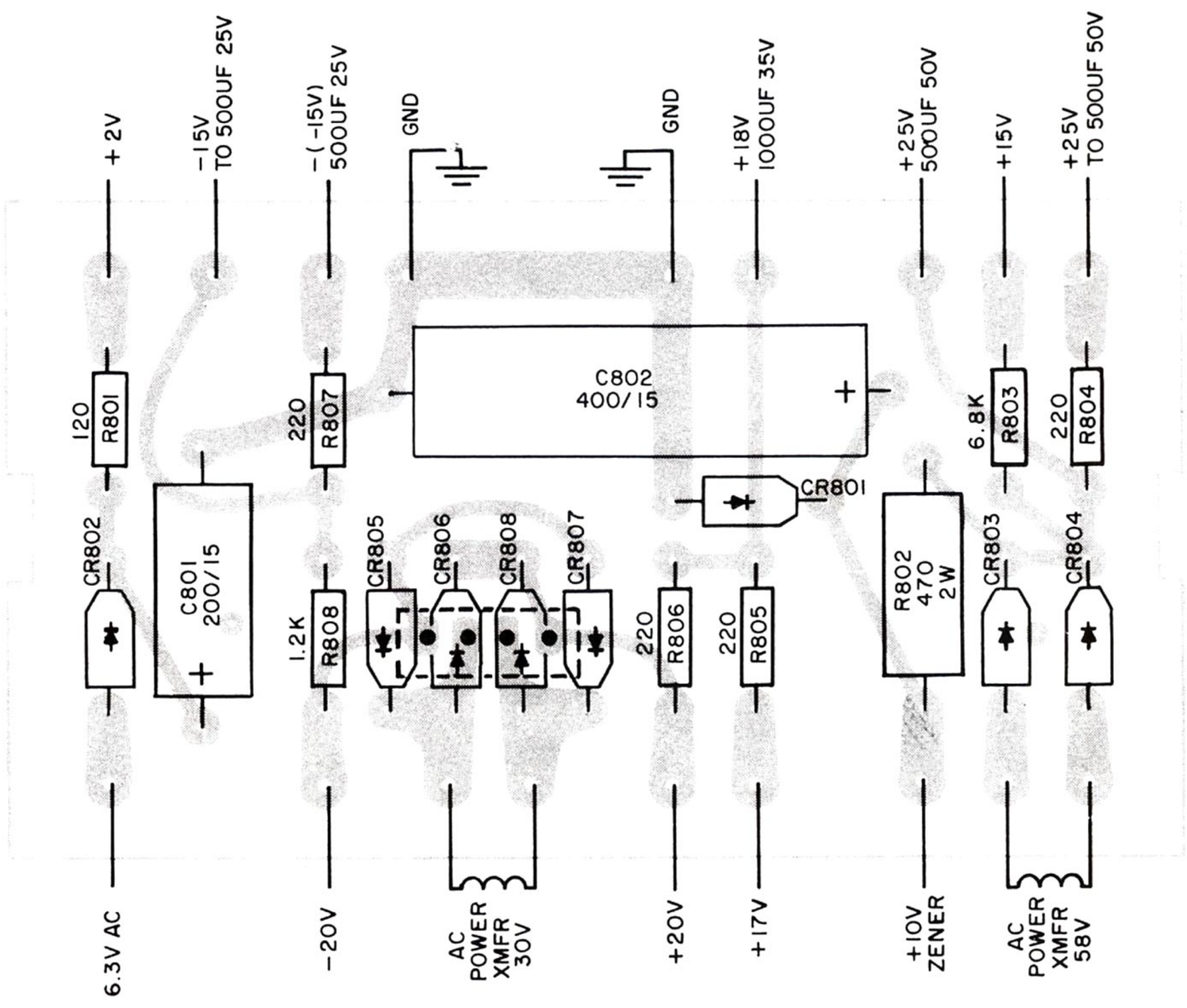

90722930