REVISIONS			
REV	DESCRIPTION OF CHANGE OR PREVIOUS STATE	DRAWN	DATE
A2	ORIGINAL	DC	04/18/95

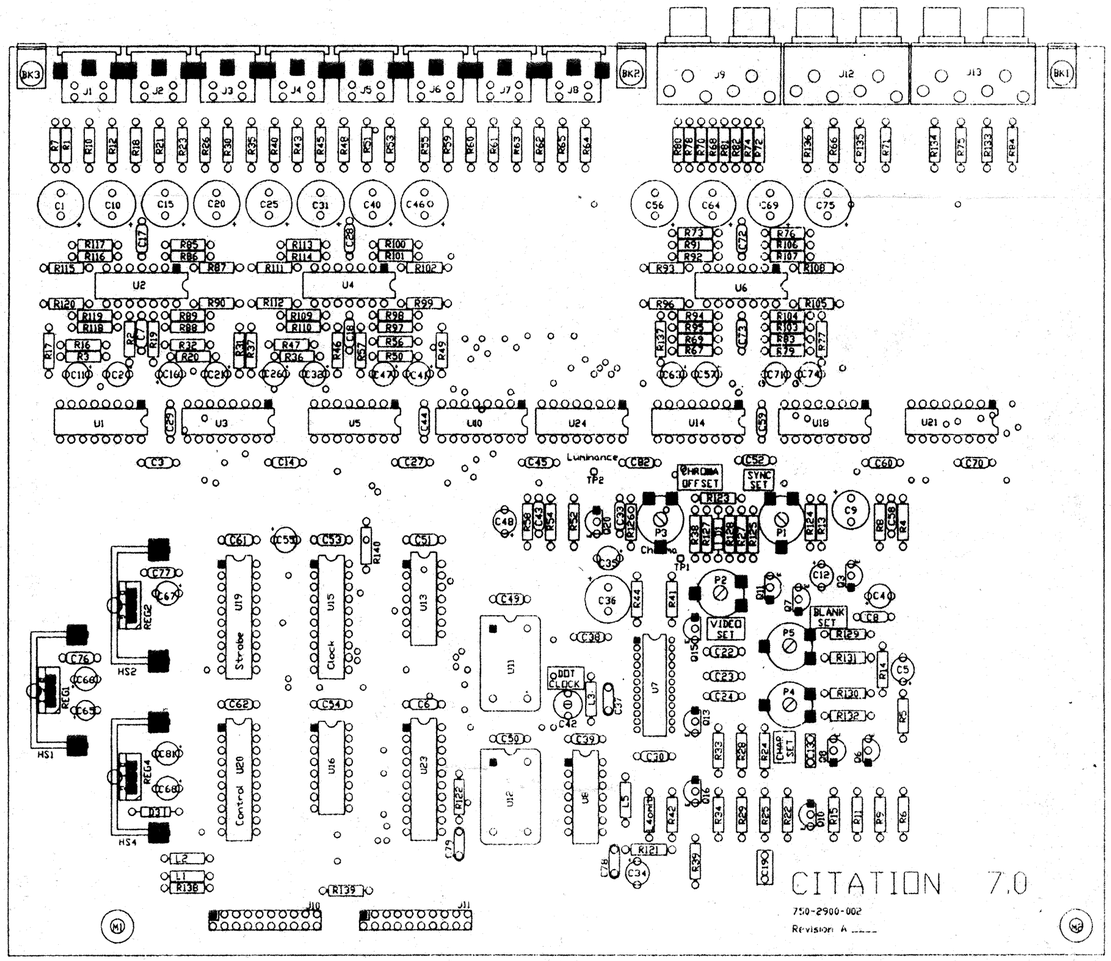

RELEASED FOR MANUFACTURE
9/19/95

SIGNATURE		DATE
DRAWN	D.J.CLARK	04/18/95
DESIGN CHK	K. Miller	9-19-95
PROJ MGR	D. Clark	9-19-95

C70VBPA1.SKD

CITATION
26046 EDEN LANDING ROAD, HAYWARD, CA 94545

CITATION 7.0
VIDEO PCB PART PLACEMENT

DWG NUMBER

REV A2

SHEET 1 OF 1

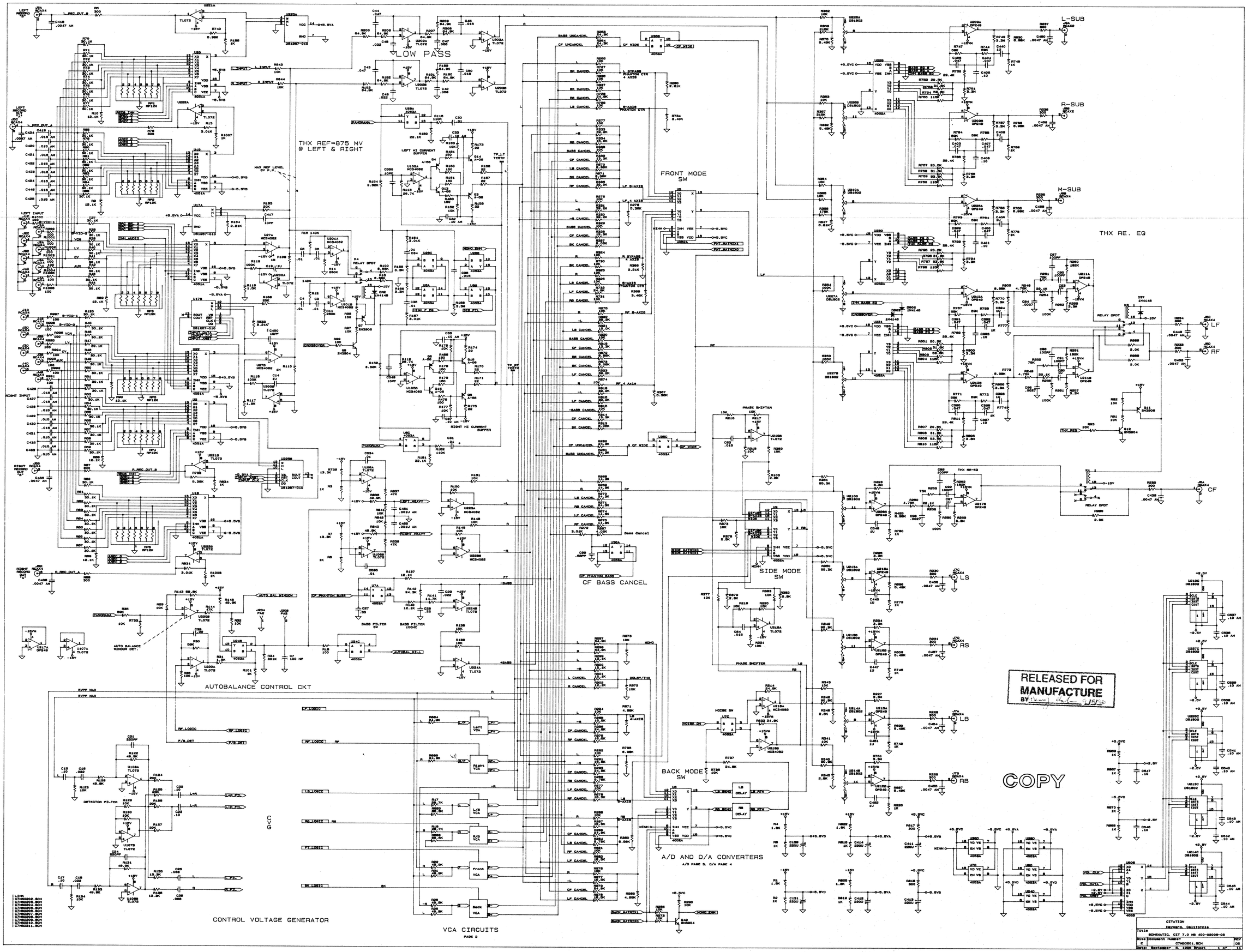
LOW PASS
THX REF=875 MV
@ LEFT & RIGHT
FRONT MODE
SW
L-SUB
R-SUB
M-SUB
THX RE. EQ
LF
RF
CF
LS
RS
LB
RB
SIDE MODE
SW
BACK MODE
SW
A/D AND D/A CONVERTERS
A/D PAGE 3, D/A PAGE 4
CF BASS CANCEL
AUTOBALANCE CONTROL CKT
CONTROL VOLTAGE GENERATOR
VCA CIRCUITS
PAGE 2
RELEASED FOR
MANUFACTURE
COPY
CITATION
Title
SCHEMATIC, CIT 7.0 MB 400-02006-03
Document Number
C7MB0201.SCH
Date: September 8, 1988 Sheet 1 of 11

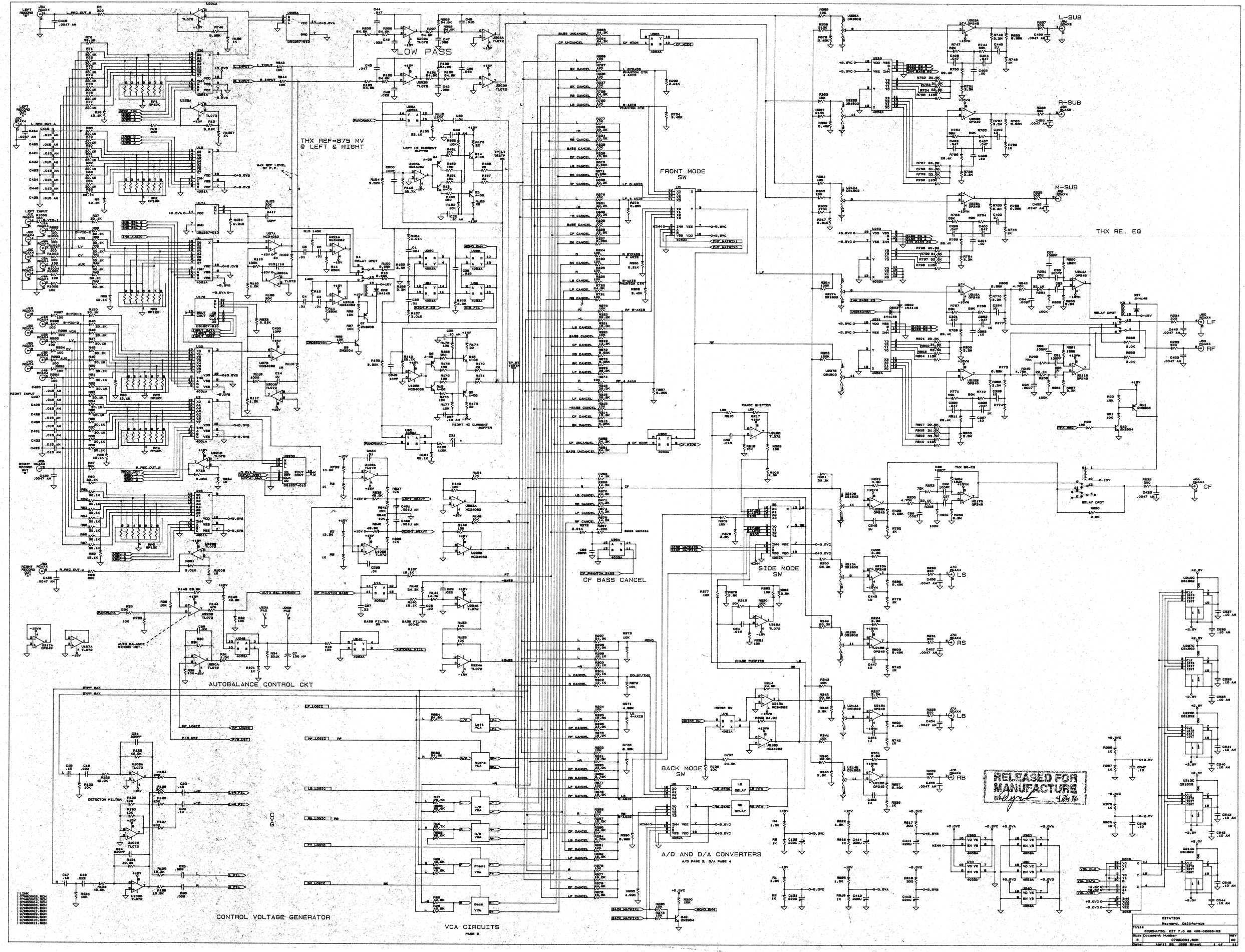
LOW PASS
THX REF=875 MV
@ LEFT & RIGHT
FRONT MODE
SW
SIDE MODE
SW
BACK MODE
SW
THX RE. EQ
CF BASS CANCEL
AUTOBALANCE CONTROL CKT
CONTROL VOLTAGE GENERATOR
VCA CIRCUITS
PAGE 2
A/D AND D/A CONVERTERS
A/D PAGE 3, D/A PAGE 4
RELEASED FOR
MANUFACTURE
4/26/96
CITATION
Hayward, California
SCHEMATIC, CET 7.0 HS 400-02008-03
07HS0001.SCH
April 26, 1996

REVISIONS			
REV	DESCRIPTION OF CHANGE OR PREVIOUS STATE	DRAWN	DATE
C1	DIODE REVERSED	DJC	10/17/95
C2	SOFTWARE CHANGE	DJC	02/28/96
C3	CHANGE RESISTOR VALUE IN R670, AND R672	DJC	02/29/96
03	PCB CIRCUIT REVISION	DJC	04/09/96
04	PCB CIRCUIT REVISION ECO 0191	DJC	09/19/96

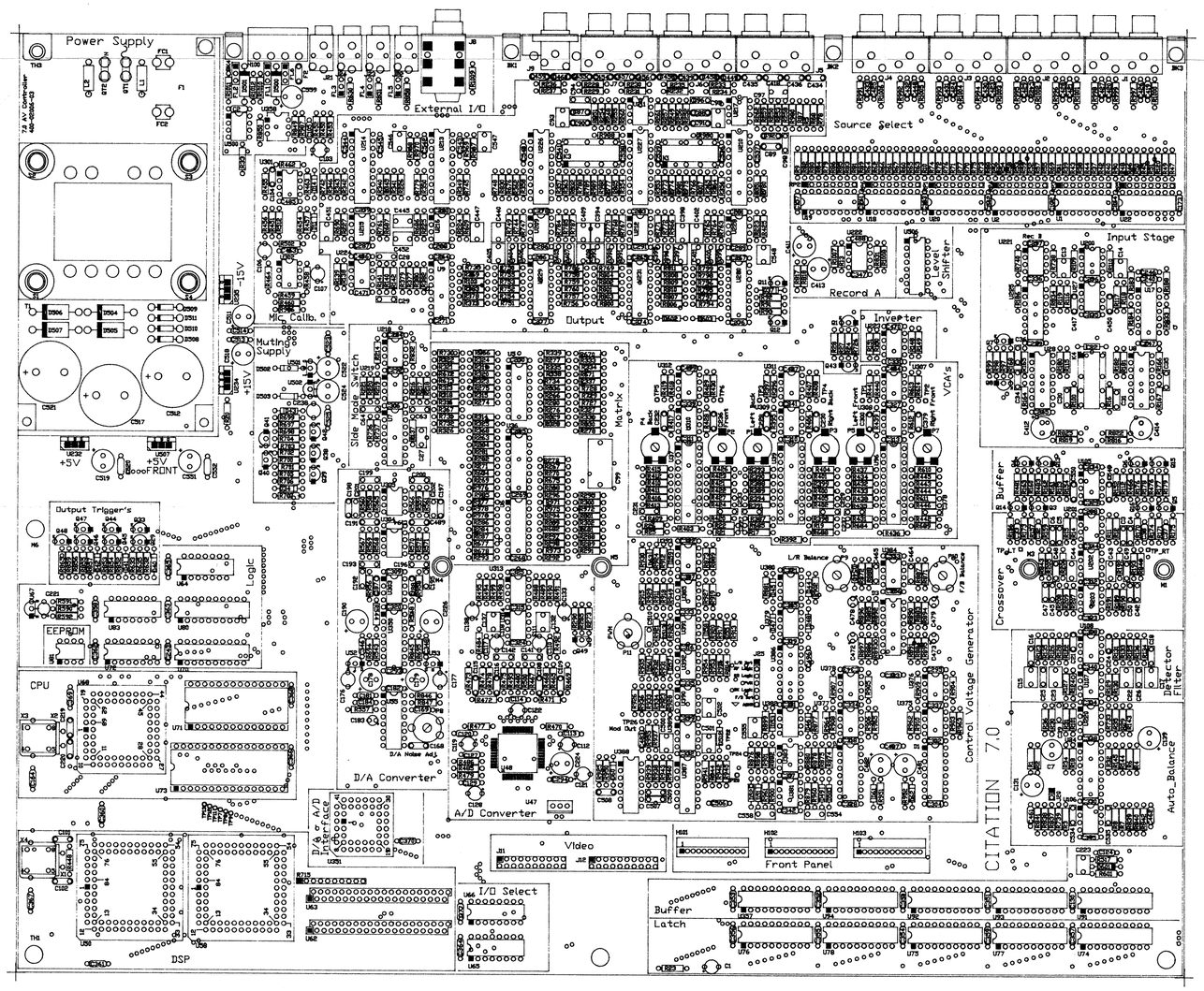

COPY

RELEASED FOR MANUFACTURE BY _____

SIGNATURE		DATE
DRAWN	D.J.CLARK	09/19/96
DESIGN CHK		
PROJ MGR		

C70MBPD2.DWG

CITATION
26046 EDEN LANDING ROAD, HAYWARD, CA 94545

PART PLACEMENT
CIT 7.0 MAIN BD.

DWG NUMBER 400-02006 REV 04

SCALE: NOT TO SCALE SHEET 1 OF 1

REVISIONS			
REV	DESCRIPTION OF CHANGE OR PREVIOUS STATE	DRAWN	DATE
C1	DIODE REVERSED	DJC	10/17/95
C2	SOFTWARE CHANGE	DJC	02/28/96
C3	CHANGE RESISTOR VALUE IN R670, AND R672	DJC	02/29/96
03	PCB CIRCUIT REVISION	DJC	04/09/96

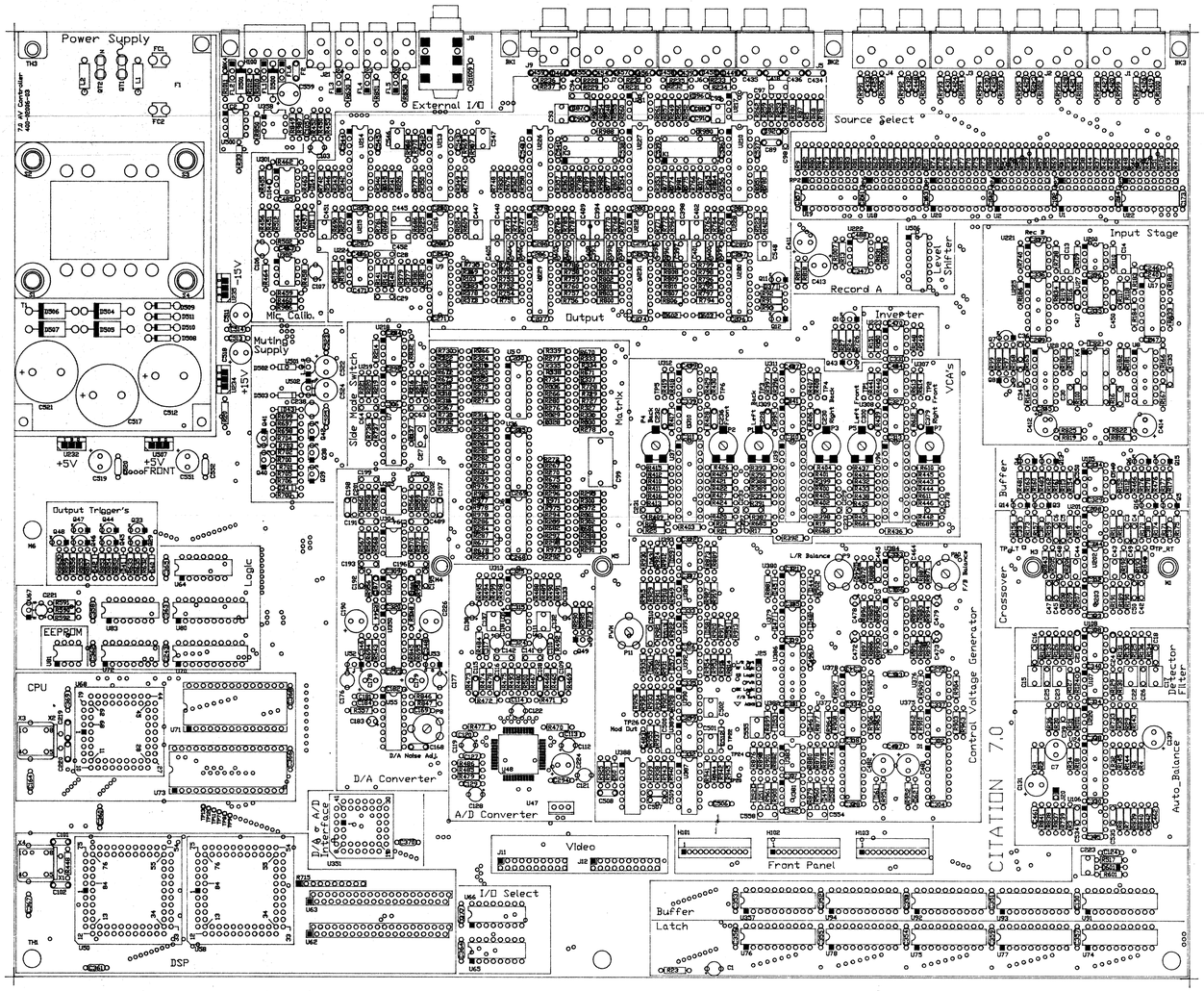

RELEASED FOR MANUFACTURE
BY [illegible] 5/1/96

SIGNATURE		DATE
DRAWN	D.J.CLARK	04/09/96
DESIGN CHK	[illegible]	4/29/96
PROJ MGR	D Clark	5-15-96

C70MBPD0.DWG

CITATION
26046 EDEN LANDING ROAD, HAYWARD, CA 94545

PART PLACEMENT
CIT 7.0 MAIN BD.

DWG NUMBER 400-02006 REV 03

SCALE: NOT TO SCALE SHEET 1 OF 1

REVISIONS			
REV.	DESCRIPTION OF CHANGE OR PREVIOUS STATE	DRAWN	DATE
00	ORIGINAL	DJC	7/21/9
01	ADDED NOTE 7A	DJC	7/24/9
02	COMPONENT VALUE, AND NOTE 15 SHEET 2	DJC	12/17/
03	CITATION 5.0 ONLY: ROTATION OF P104	DJC	06/04/
04	CITATION 5.0 ONLY DISTANCE OF SPACING FOR R206/R207 CHANGED FROM 1/4" TO 1/2".	DJC	2/29/00

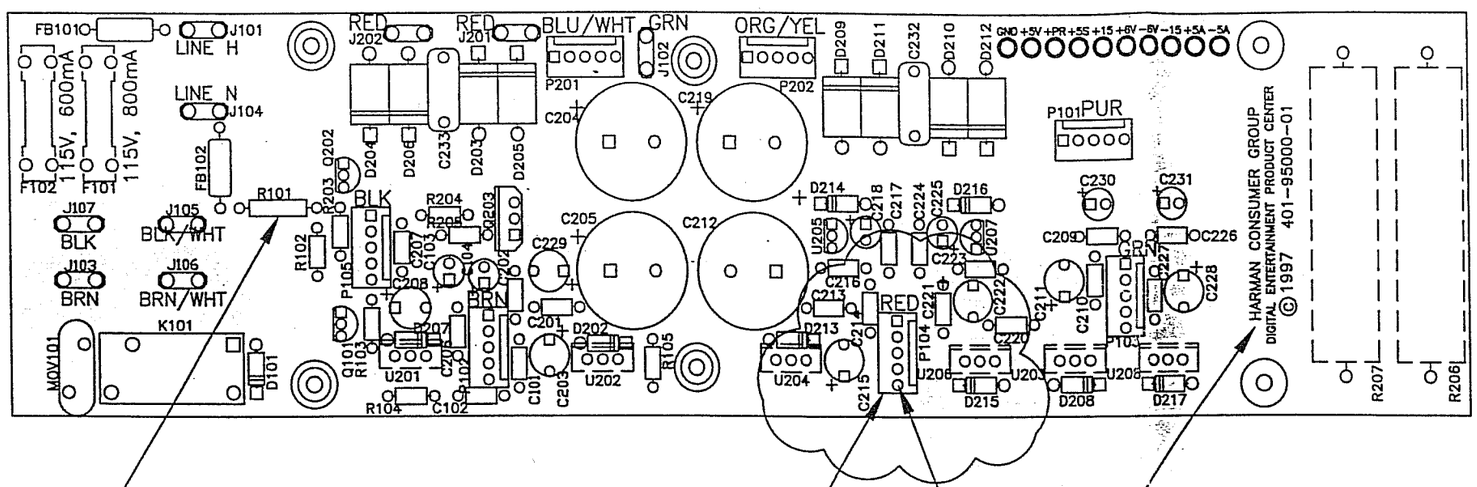

7A

15

NOTE: FOR CITATION 5.0 ONLY

P104 IS TO BE INSTALLED BACK-WARDS FROM SILKSCREEN ON PCB.

EXAMPLE:

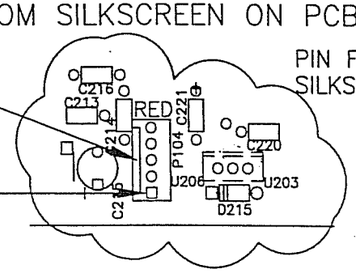

PIN FIVE OF PCB SILKSCREEN P104.

PIN ONE OF COMPONENT P104.

INSTALL PIN 1 OF COMPONENT P104 IN PIN 5 LOCATION OF P104 ON THE PCB. AS SHOWN IN THE EXAMPLE.

NOTES:

UNLESS OTHERWISE SPECIFIED:

1. SQUARE PADS ON THRU HOLE PARTS (ie: CONNECTORS, DIPS, SIPS, LEDS,) DENOTE PIN 1.
2. ALL BOARDS REQUIRE A COMPLETE AND THOROUGH VISUAL INSPECTION.
3. ALL BOARDS MUST BE BARE BOARD TESTED.
4. (XX) CIRCLES REFER TO ITEM NUMBERS ON THE PARTS LIST.
5. [XX] SQUARES REFER TO THE NOTES.
6. ASSEMBLE AND SOLDER PER ANSI/IPC-A-610B.

PRE WAVE:

7. KEEP U201, U202, U204, U206, U203, U208, R207, R206, PLUS ALL MOUNTING HOLES FREE AND CLEAR OF SOLDER.

7A. OMIT 4.3M, 5%, 1/2W, RESISTOR, IN R101; IF BUILDING PCB'S FOR SIGNATURE 2.0 230V UNITS ONLY.
OMIT 4.3M, 5%, 1/2W, RESISTOR, IN R101; IF BUILDING PCB'S FOR CITATION 5.0 120V, AND 230V UNITS.

POST WAVE:

(CONTINUED ON SHEET 2)

COPY

RELEASED FOR MANUFACTURE BY

	SIGNATURE	DATE
DRAWN	DJ CLARK	7/21/97
DESIGN CHK		
PROJ. MGR		

harman consumer group
digital entertainment product center
1308 Borregas Ave., Sunnyvale, CA 94089-1001

ASSY DRAWING, POWER SUPPLY BD.

CSPWRA03.DWG

DWG. NUMBER 041-95000 04 REV. 03

SCALE: NOT TO SCALE SHEET: 1 OF

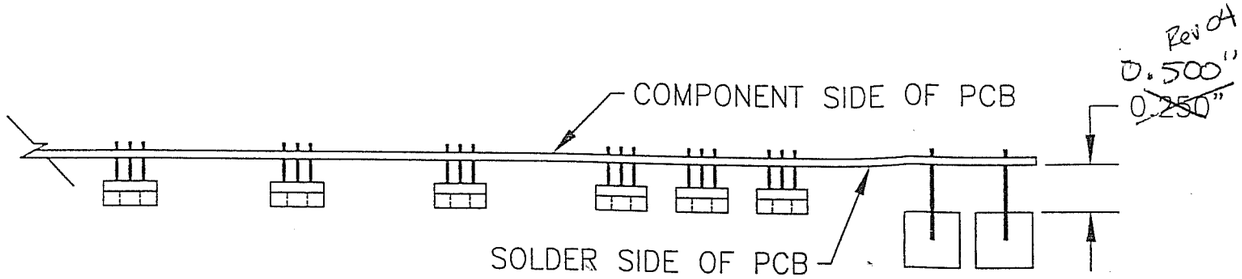

DETAIL B

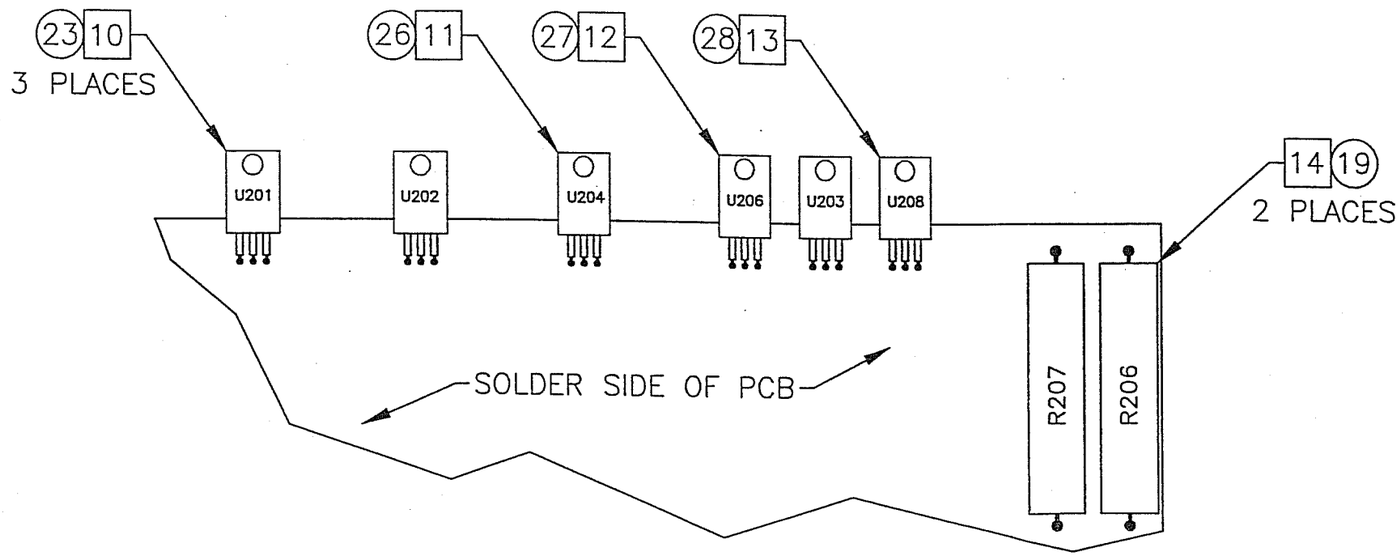

DETAIL C

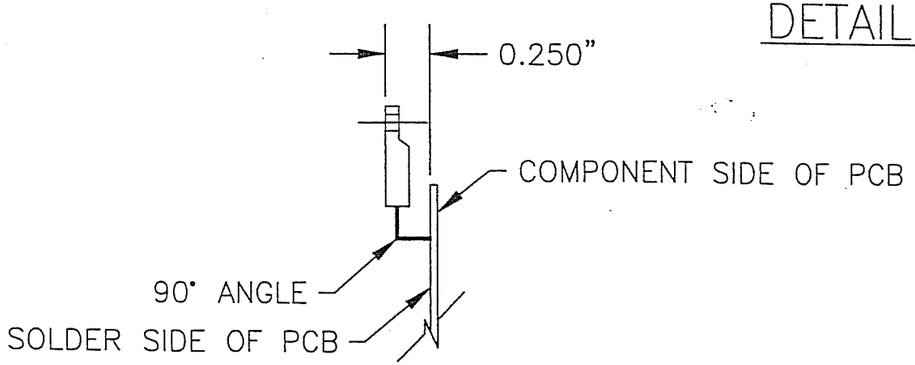

DETAIL A

NOTES: (CONTINUED FROM SHEET 1)

POST WAVE:

9. AFTER WAVE SOLDER; ALL COMPONENTS ARE TO BE FLUSH, AND PERPENDICULAR TO PCB. (ie: RELAY, CONNECTORS, FUSE CLIPS, AND FAST-ON'S)

10. THREE, 7805 VOLTAGE REGULATORS, ARE TO BE BENT AT A 90° ANGLE. (SEE DETAIL A). INSTALL 7805 VOLTAGE REGULATORS IN U201, U202, U203, ON SOLDER SIDE OF PCB (SEE DETAIL C). BE SURE TO KEEP BACK SIDE OF REGULATORS, PARALLEL, AND A HEIGHT OF 0.250" FROM SOLDER SIDE OF PCB, AS SHOWN IN DETAIL A.

11. ONE, 7815 VOLTAGE REGULATOR, IS TO BE BENT AT A 90° ANGLE. (SEE DETAIL A). INSTALL 7815 VOLTAGE REGULATOR IN U204, ON SOLDER SIDE OF PCB (SEE DETAIL C). BE SURE TO KEEP BACK SIDE OF REGULATOR, PARALLEL, AND A HEIGHT OF 0.250" FROM THE SOLDER SIDE OF PCB, AS SHOWN IN DETAIL A.

12. ONE, 7915 VOLTAGE REGULATOR, IS TO BE BENT AT A 90° ANGLE. (SEE DETAIL A). INSTALL 7915 VOLTAGE REGULATOR IN U206, ON SOLDER SIDE OF PCB (SEE DETAIL C). BE SURE TO KEEP BACK SIDE OF REGULATOR, PARALLEL, AND A HEIGHT OF 0.250" FROM THE SOLDER SIDE OF PCB, AS SHOWN IN DETAIL A.

13. ONE, 7905 VOLTAGE REGULATOR, IS TO BE BENT AT A 90° ANGLE. (SEE DETAIL A). INSTALL 7905 VOLTAGE REGULATOR IN U208 ON SOLDER SIDE OF PCB (SEE DETAIL C). BE SURE TO KEEP BACK SIDE OF REGULATOR, PARALLEL, AND A HEIGHT OF 0.250" FROM THE SOLDER SIDE OF PCB, AS SHOWN IN DETAIL A.

14. INSTALL TWO, 33 OHM, 5%, WIREWOUND, 10W, RESISTORS IN R206, AND R207 ON SOLDER SIDE OF PCB. BE SURE TO KEEP BODY OF RESISTORS ~~0.250"~~ 0.500" (Rev 04) OFF PCB. (SEE DETAILS B AND C)

15. THIS ASSEMBLY DRAWING TO BE USED IN COMPLIANCE WITH PART LIST 061-95000-02, AND BARE BOARD 401-95000-01 ONLY.

COPY

	SIGNATURE	DATE	harman consumer group digital entertainment product center 1308 Borregas Ave., Sunnyvale, CA 94089-1001
DRAWN	DJ CLARK	7/21/97	ASSY DRAWING, POWER SUPPLY BD.
DESIGN CHK			
PROJ. MGR			
CSPWA203.DWG			DWG. NUMBER 041-95000 04 REV. ~~05~~
			SCALE: NOT TO SCALE SHEET: 2 OF

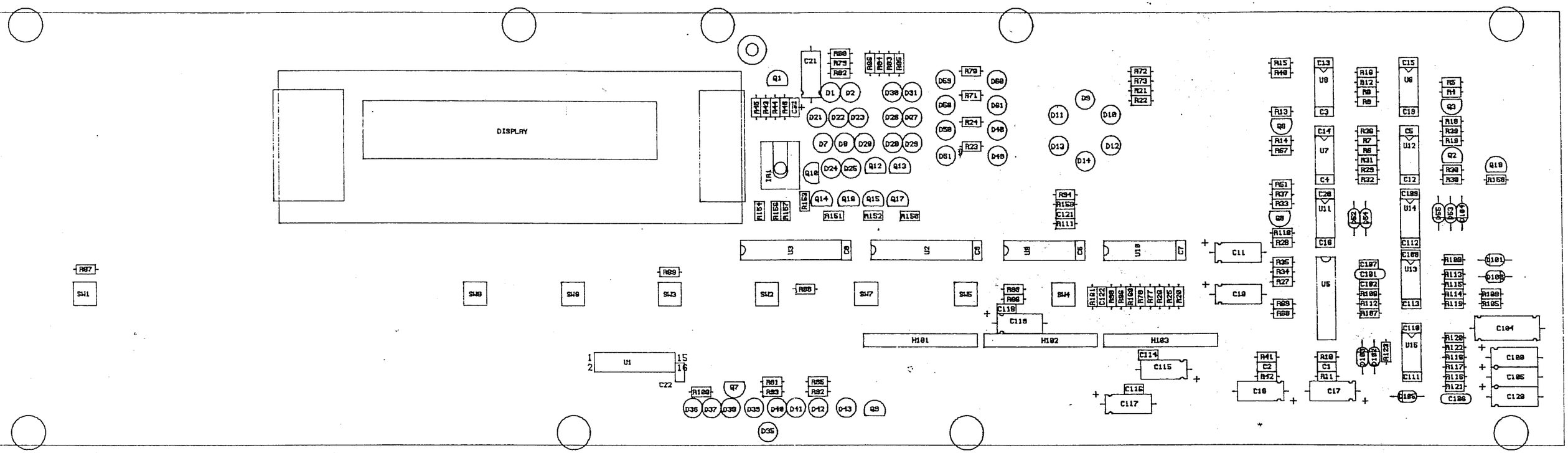

RELEASED FOR MANUFACTURE
11/7/95

CITATION 26046 EDEN LANDING RD. HAYWARD, CA. 94545 (510) 293-0183	LAYER: SILKSCREEN
CITATION 7.0 FRONT PANEL PART PLACEMENT	
750-2900-000 REV D0	
DATE: MAY 31, 1995	
DRAWN BY: LAURIE MILLE	

Pcgerber II V 4.01 : Thu Aug 14 13:10:18 1997 - (Untitled) : 70avd0vb.gto

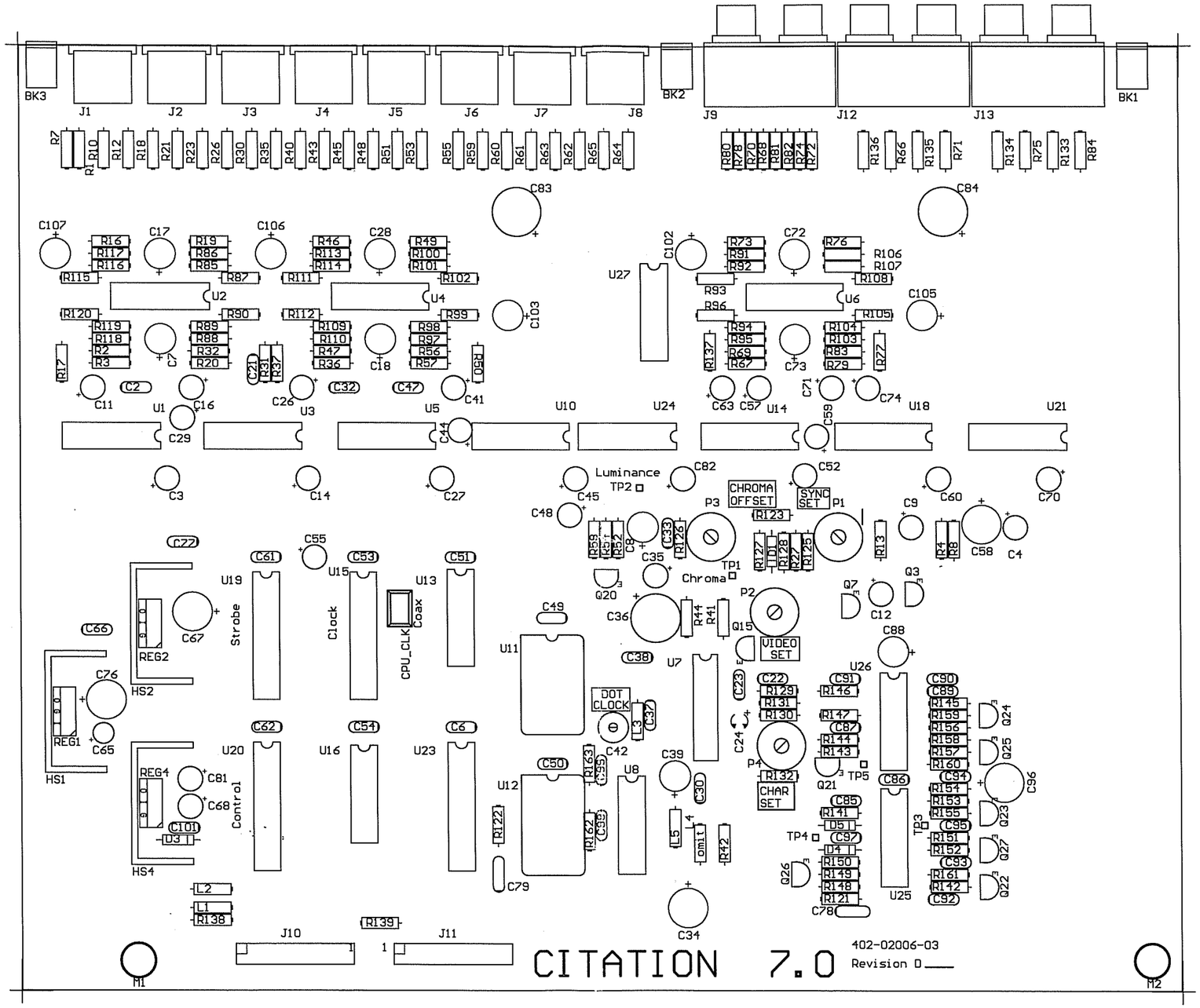

RELEASED FOR MANUFACTURE
BY 8/15/97

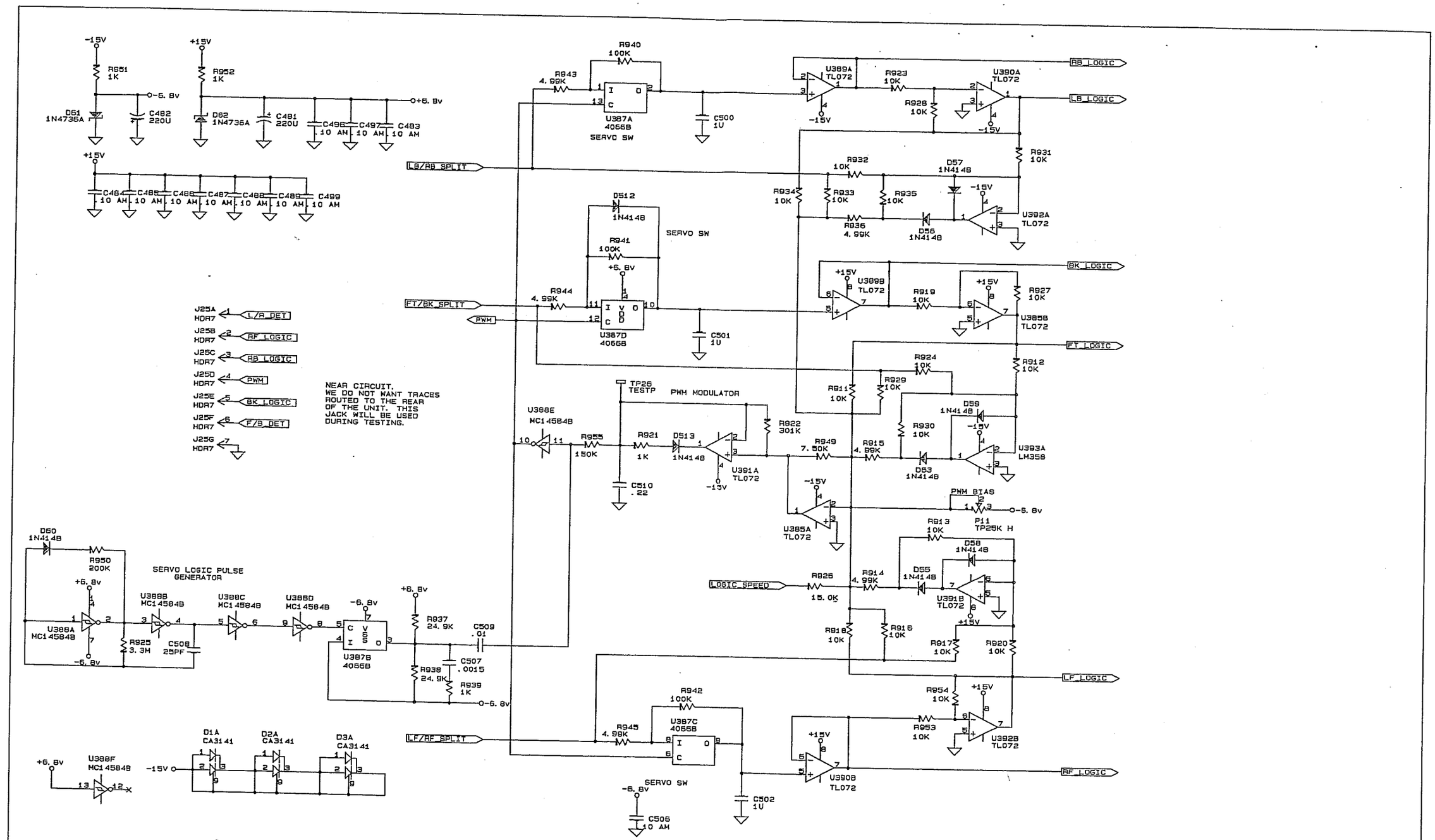

CITATION Hayward, California		
Title CITATION 7.0 CVG SERVO LOGIC		
Size C	Document Number C7MBC311.SCH	REV C3
Date: April 25, 1995	Sheet 11 of 11	

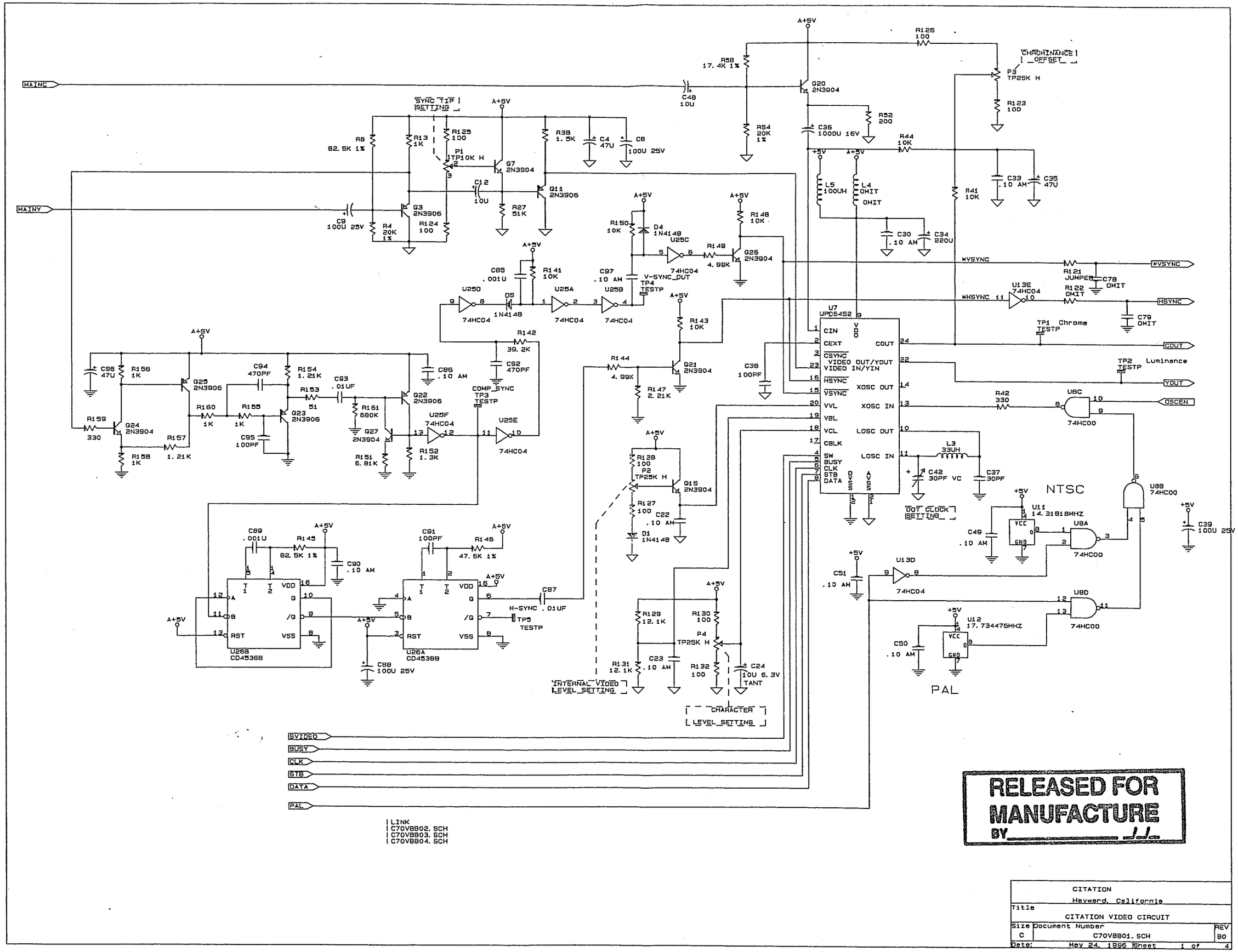
MAINC
MAINY
SYNC TIP SETTING
CHROMINANCE OFFSET
INTERNAL VIDEO LEVEL SETTING
CHARACTER LEVEL SETTING
DOT CLOCK SETTING
NTSC
PAL
U7 UPD6452
U26B CD4538B
U26A CD4538B
U11 14.31818MHZ
U12 17.734475MHZ
MVSYNC
HSYNC
CDUT
YOUT
OSCEN
SVIDEO
BUSY
CLK
STB
DATA
PAL
LINK
C70VBB02.SCH
C70VBB03.SCH
C70VBB04.SCH
RELEASED FOR MANUFACTURE
BY
COPY
CITATION
Hayward, California
Title
CITATION VIDEO CIRCUIT
Size C
Document Number C70VBB01.SCH
REV B0
Date: May 24, 1996
Sheet 1 of 4

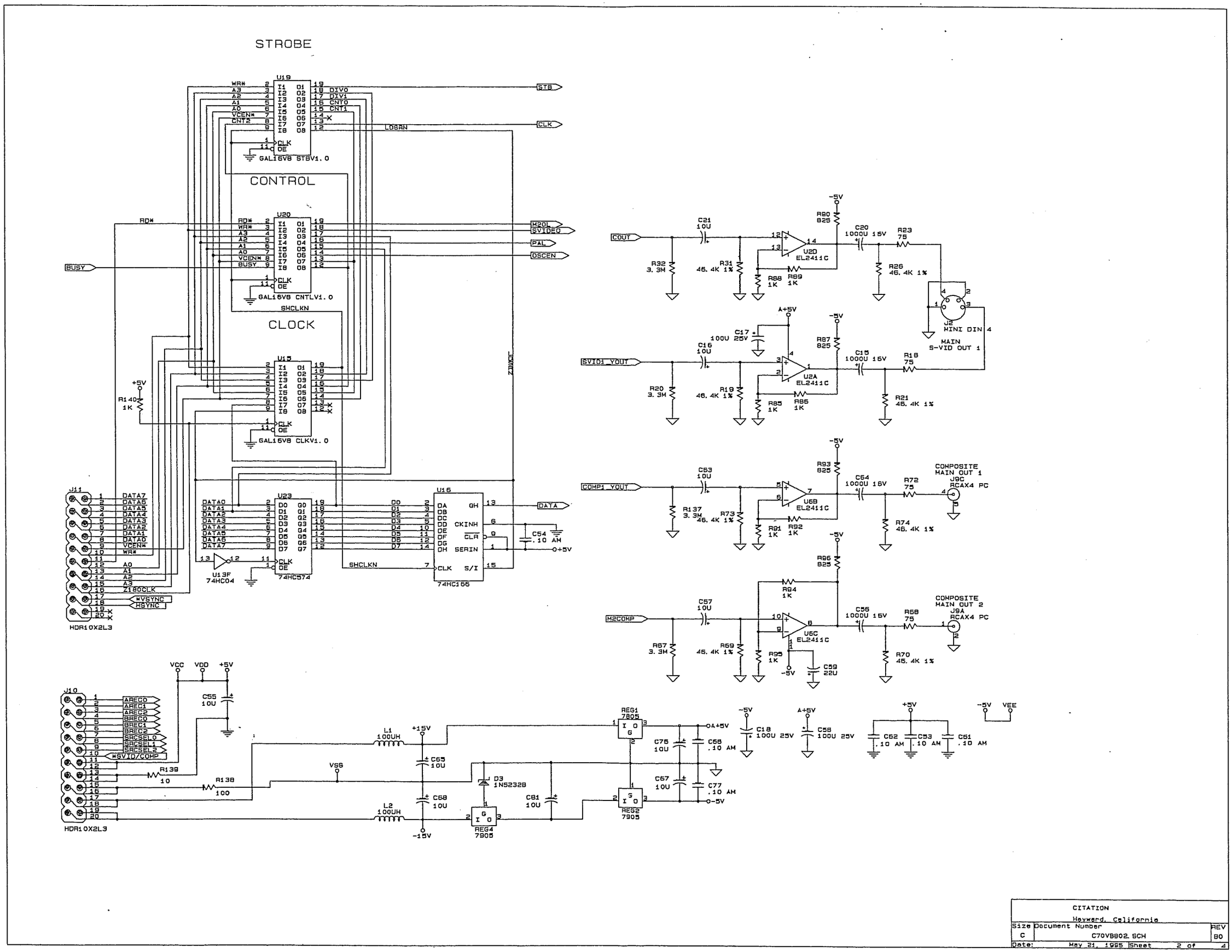

CITATION Hayward, California		
Size C	Document Number C70V8802.SCH	REV B0
Date: May 21, 1995	Sheet 2 of 4	

COPY

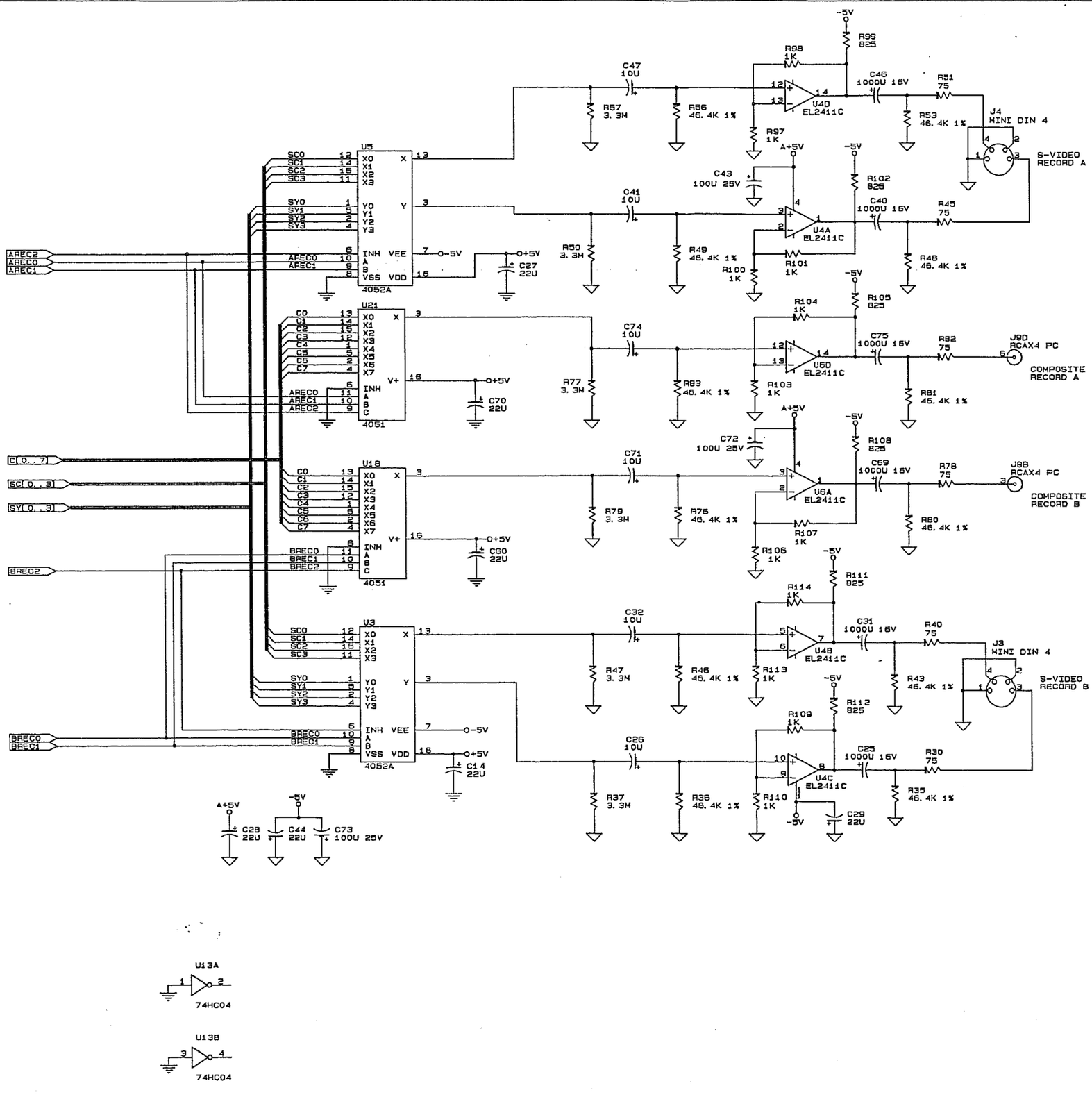

CITATION Hayward, California		
Size C	Document Number C70V8803	REV B0
Date: May 19, 1995	Sheet 3 of 4	

COPY

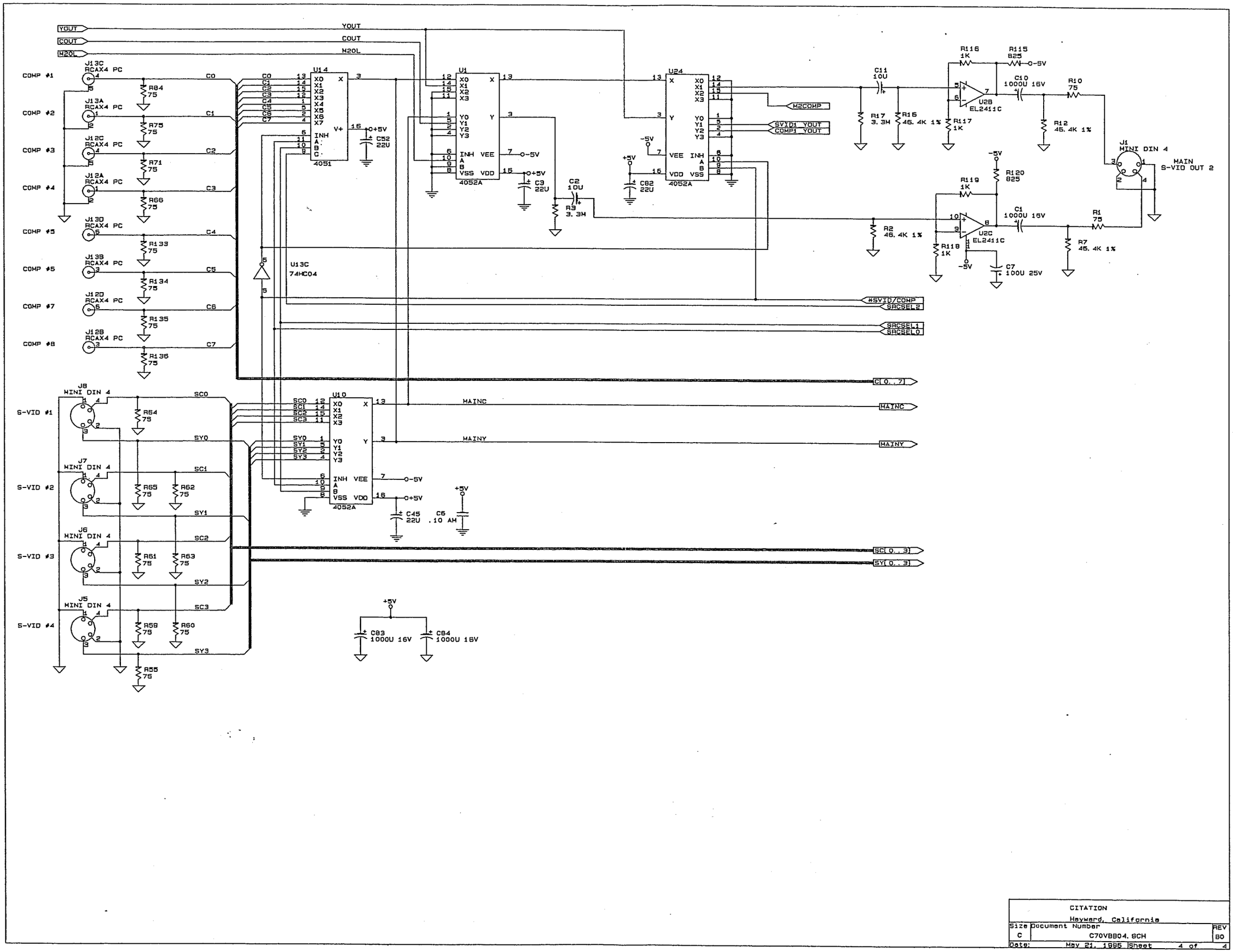

CITATION		
Hayward, California		
Size C	Document Number C70VB804.SCH	REV B0
Date: May 21, 1995	Sheet 4 of 4	

COPY

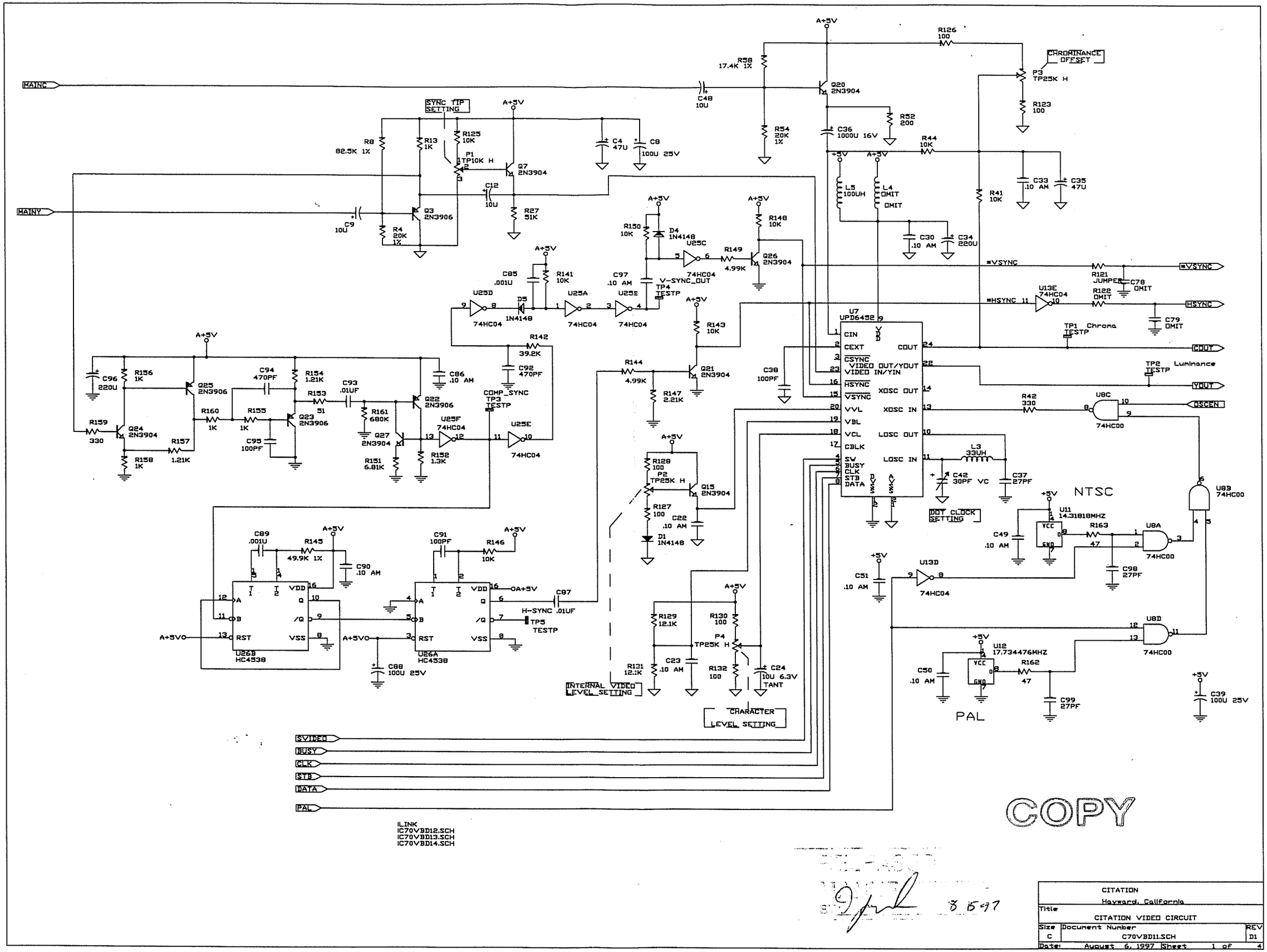

CITATION Hayward, California		
Title: CITATION VIDEO CIRCUIT		
Size: C	Document Number: C70VBD11.SCH	REV: D1
Date: August 6, 1997	Sheet 1 of 4	

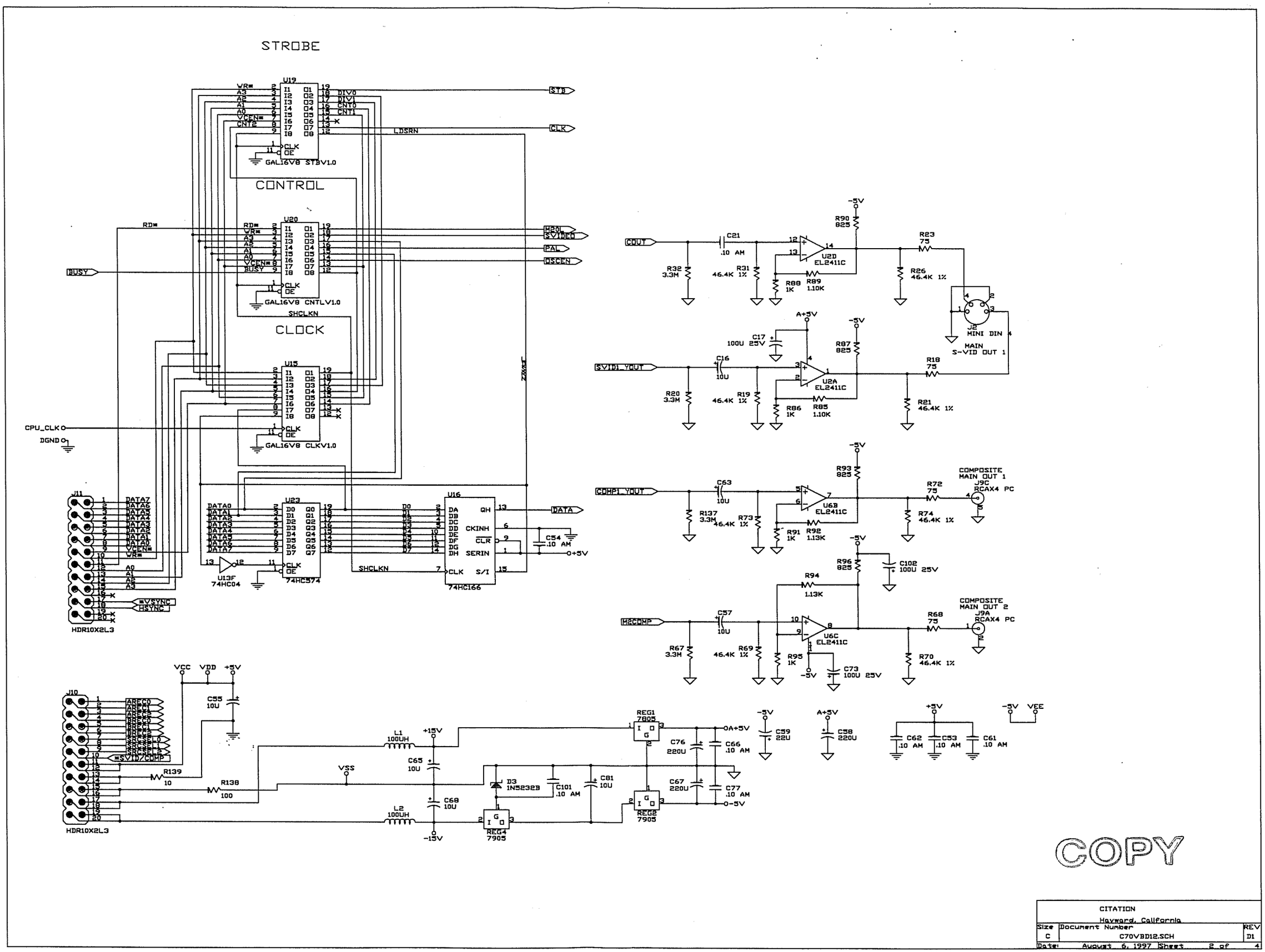

CITATION Hayward, California		
Size C	Document Number C70VBD12.SCH	REV D1
Date: August 6, 1997	Sheet 2 of 4	

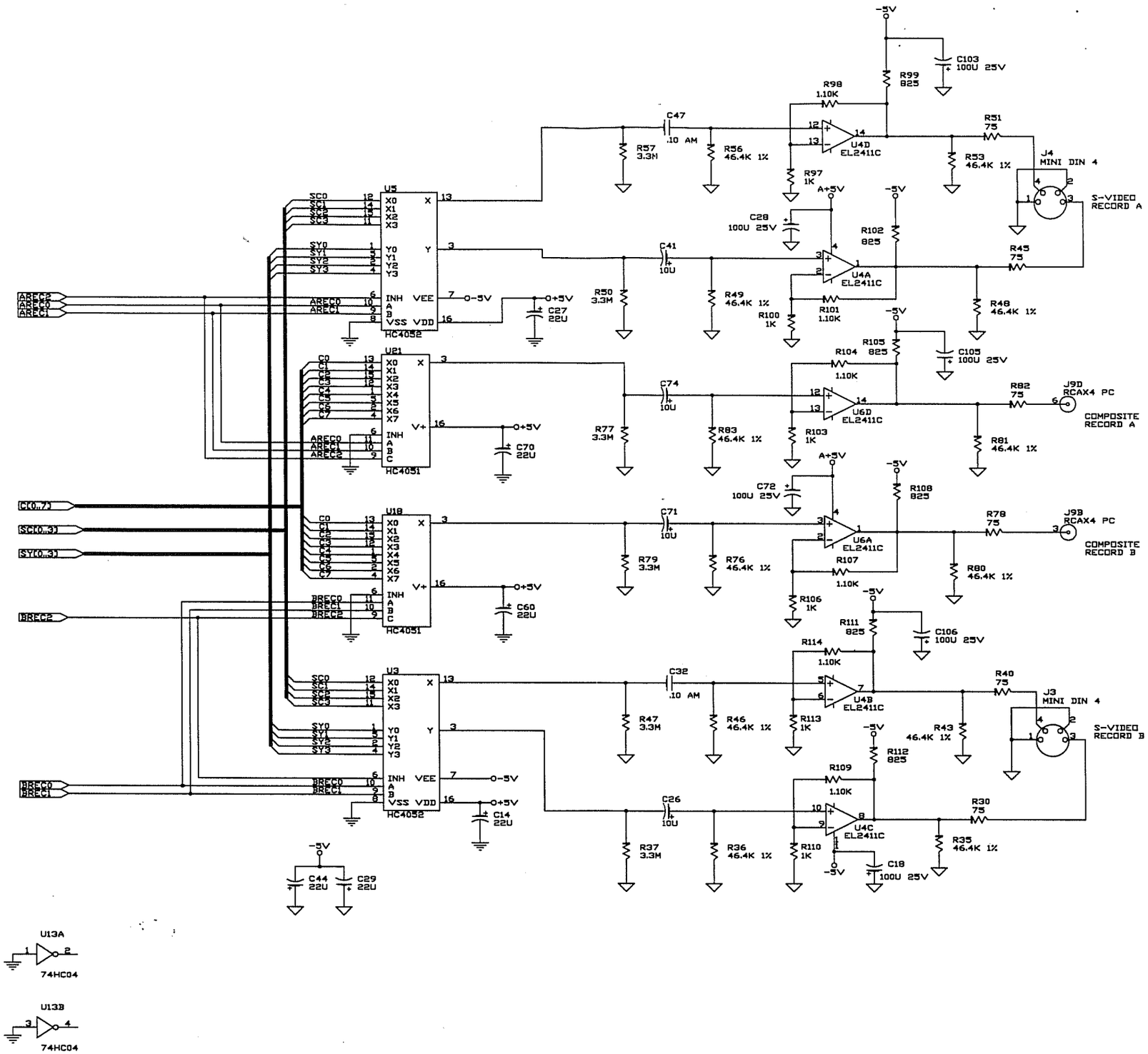

COPY

CITATION Hayward, California		
Size C	Document Number C70VBD13.SCH	REV D1
Date: August 6, 1997	Sheet 3 of 4	

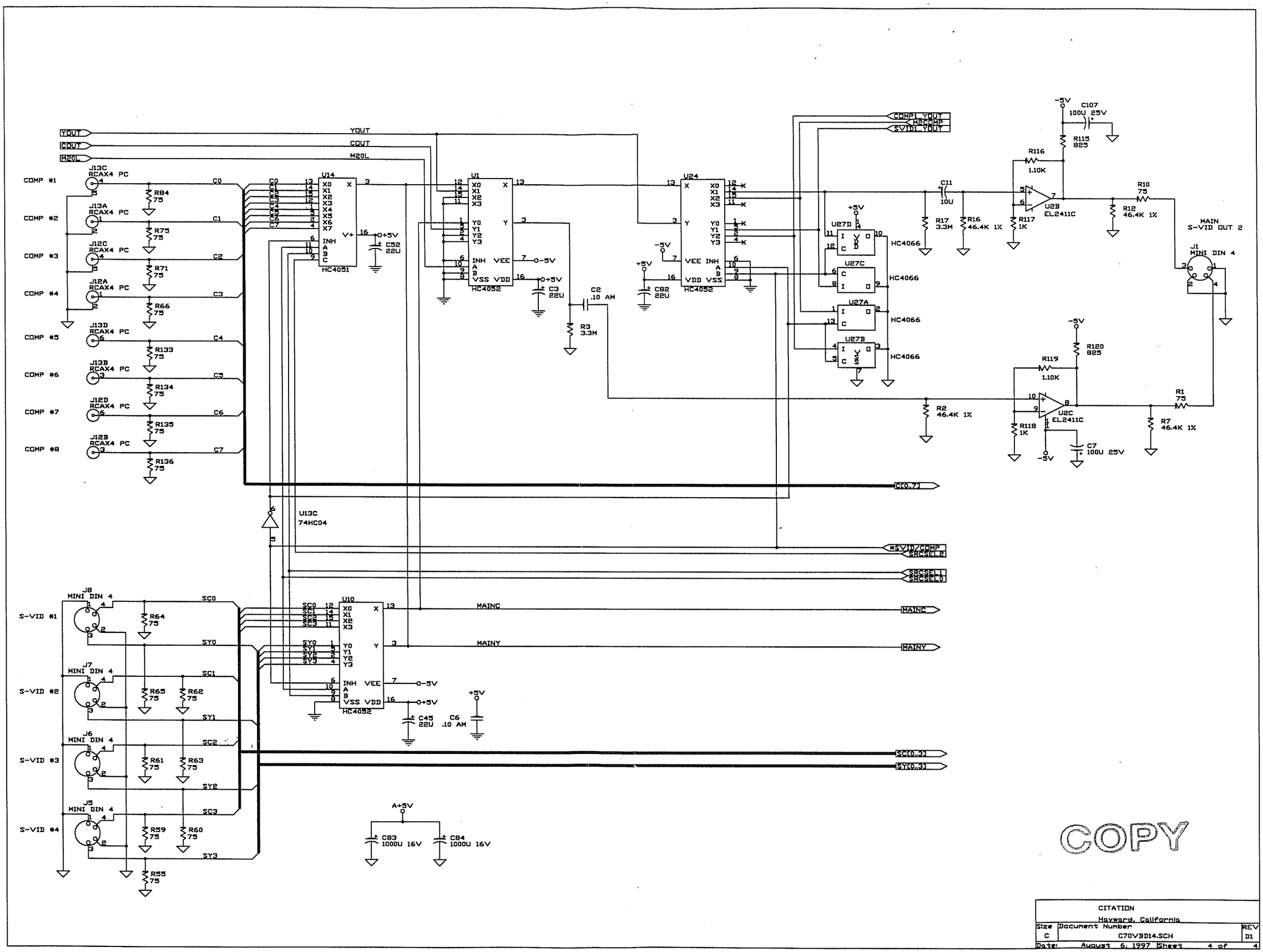

CITATION Hayward, California		
Size C	Document Number C70VBD14.SCH	REV D1
Date: August 6, 1997	Sheet 4 of 4	

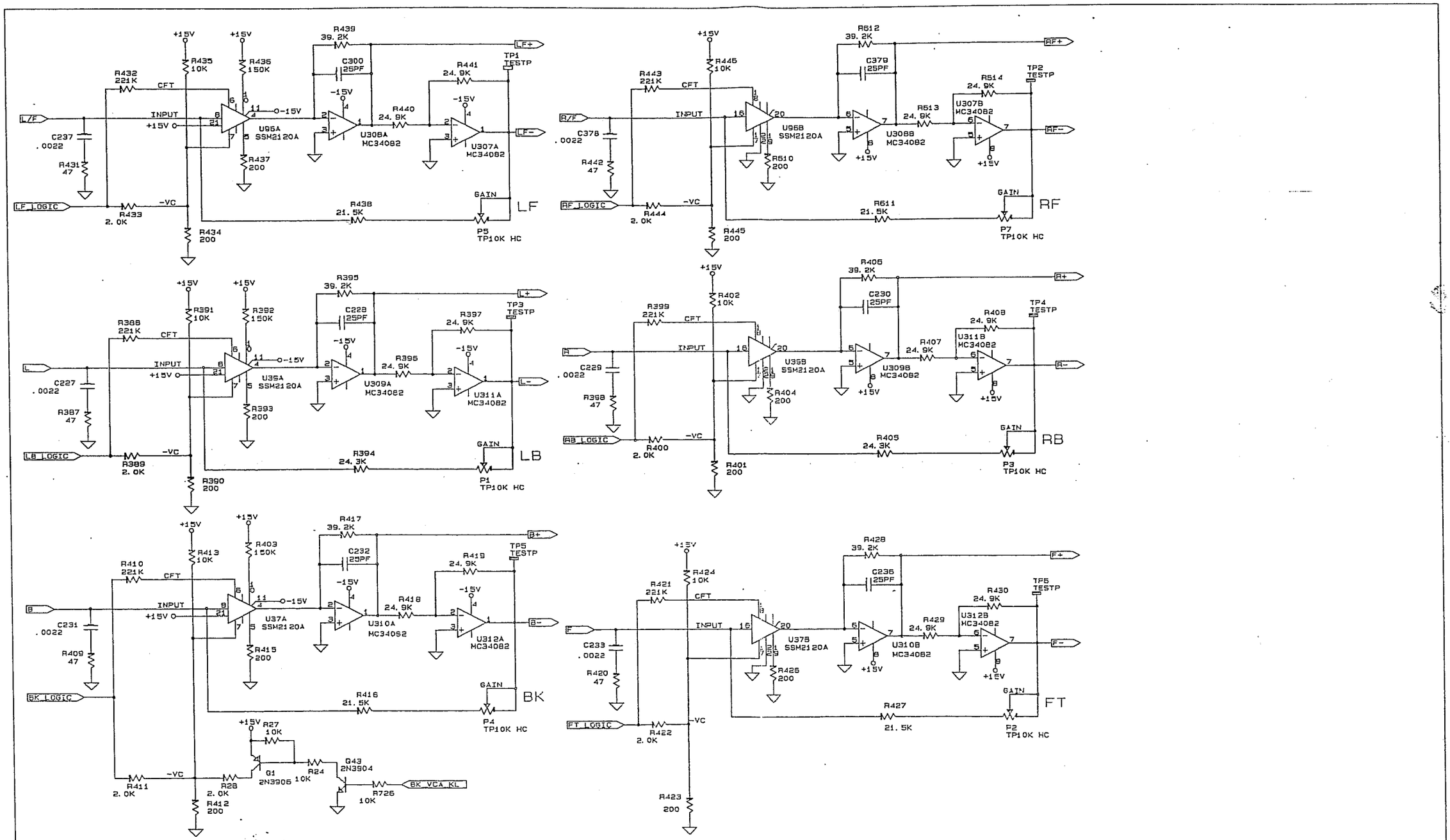

COPY

CITATION Hayward, California	
Title VCA CIRCUITS 400-02006-03	
Size C	Document Number C7MB0002.SCH	REV D0
Date: April 26, 1995	Sheet 2 of 11

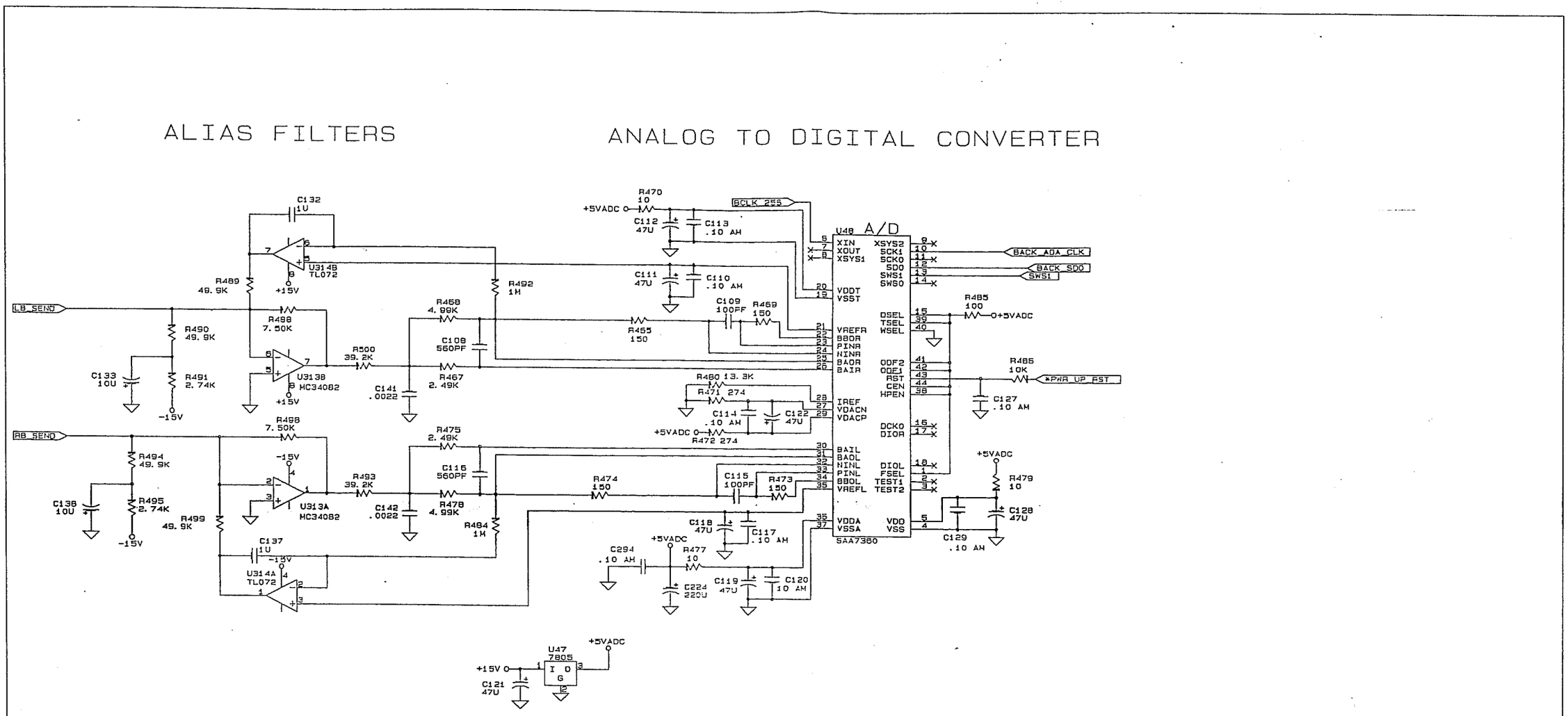

COPY

CITATION Hayward, California		
Title A/D CONVERTER 400-02006-03		
Size C	Document Number C7HBD003.SCH	REV D0
Date: April 26, 1995	Sheet 3 of 11	

DIGITAL TO ANALOG CONVERTER

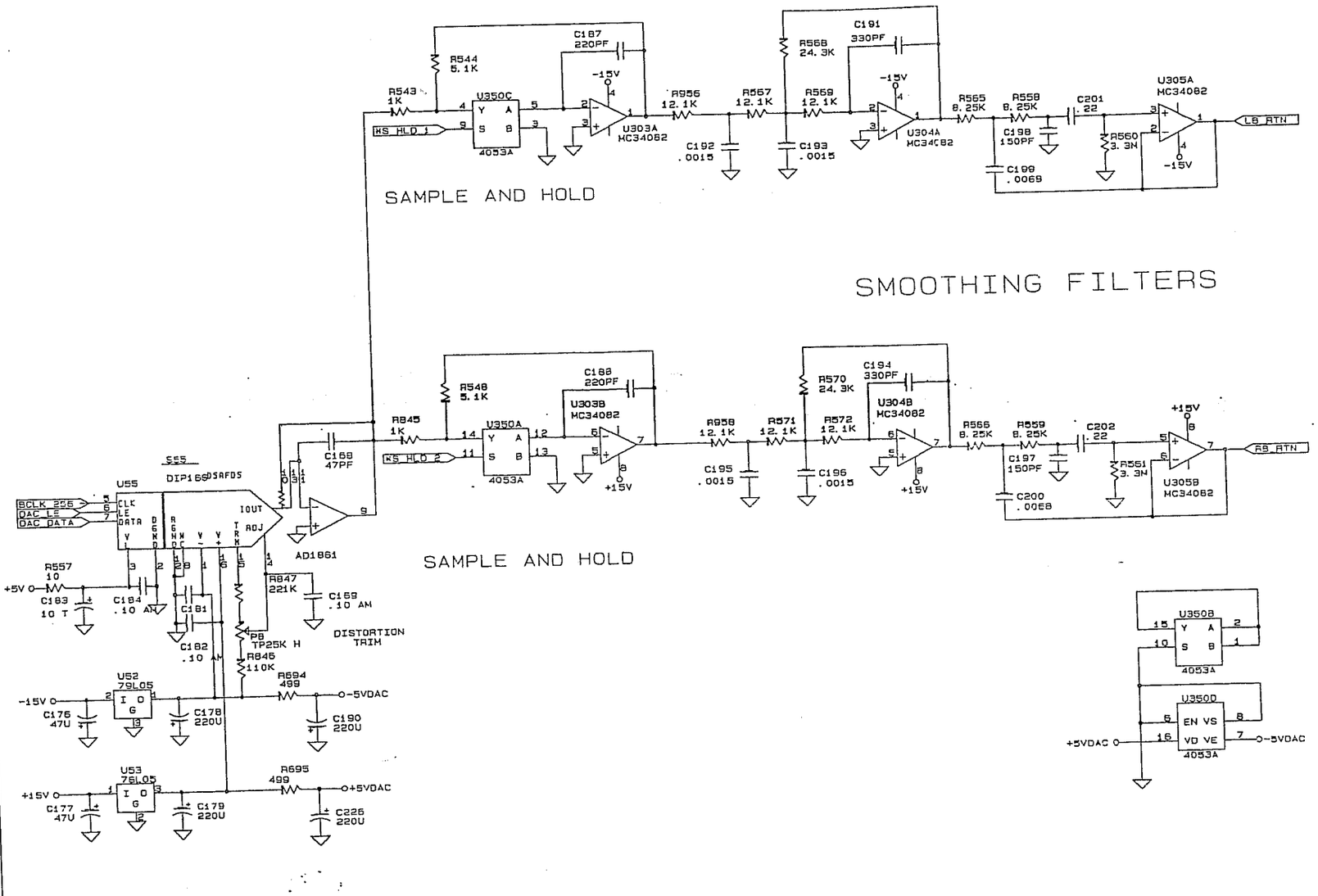

COPY

CITATION	Hayward, California
Title	D/A CONVERTER 400-02006-06
Size C	Document Number C7HB0004.SCH
REV	D0
Date: April 26, 1995	Sheet 4 of 11

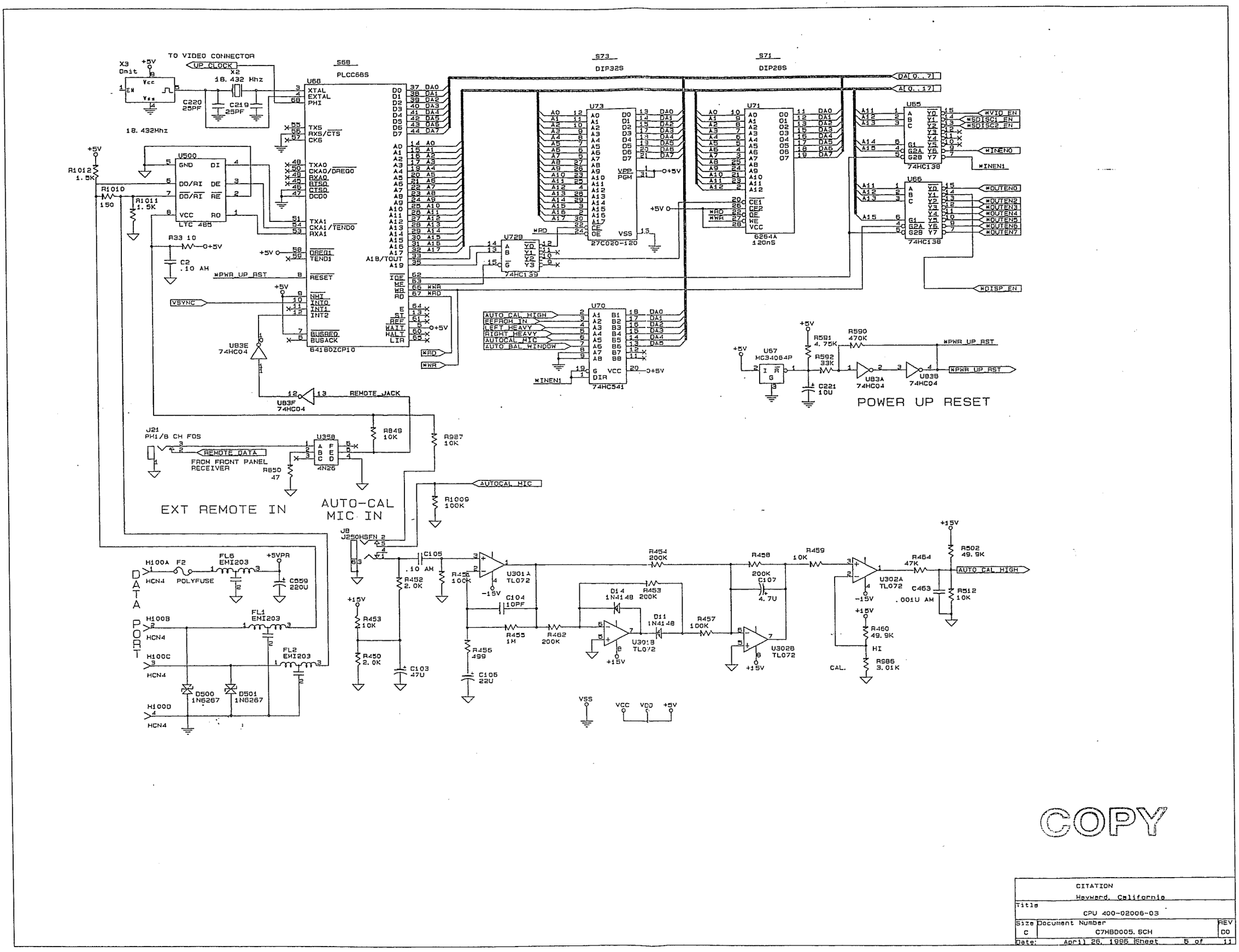

COPY

CITATION Hayward, California		
Title CPU 400-02006-03		
Size C	Document Number C7HB0005.SCH	REV D0
Date: April 26, 1995	Sheet 5 of 11	

HARMAN SYSTEM CONTROL

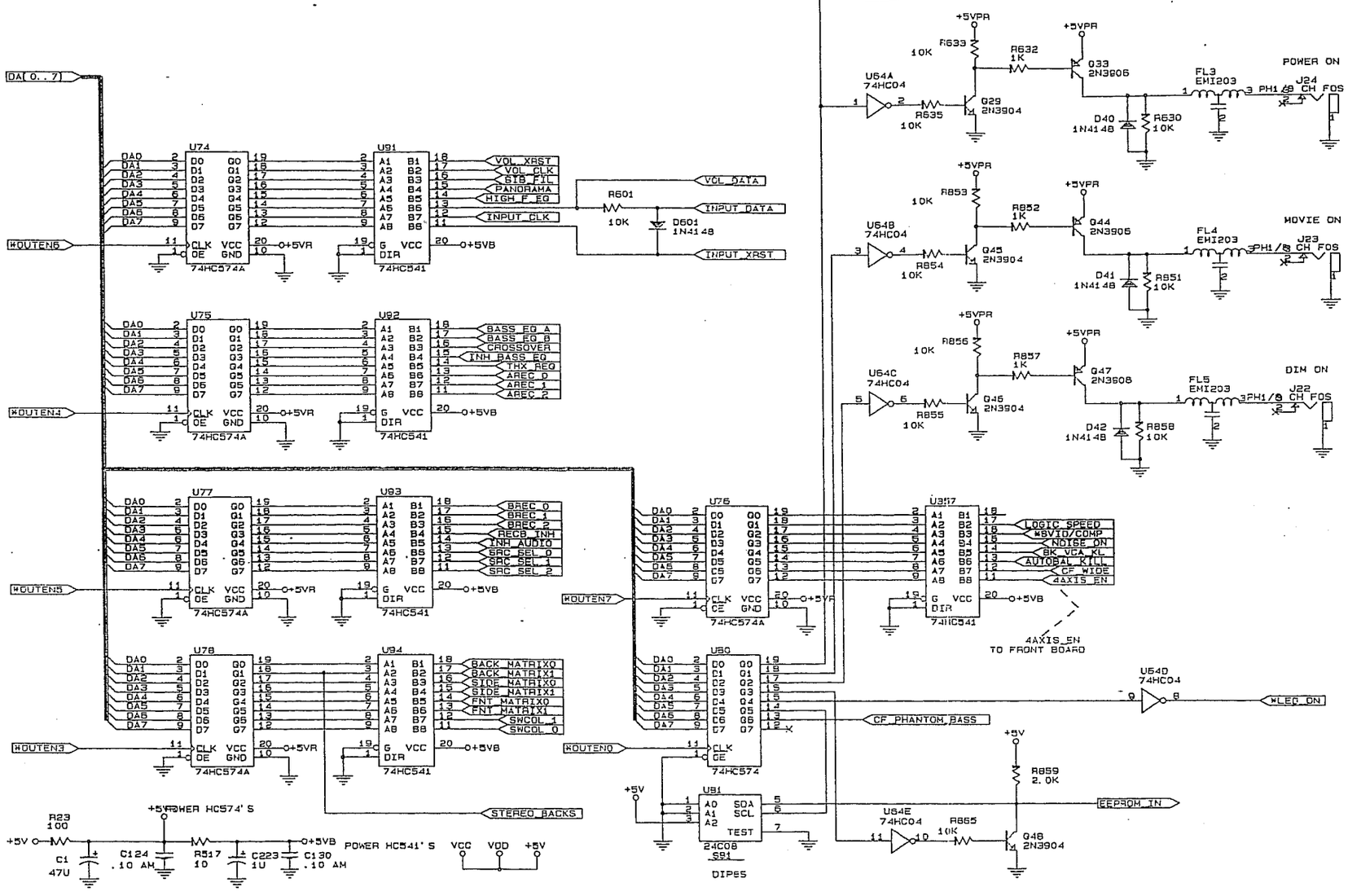

COPY

CITATION Hayward, California		
Title LATCH 400-02006-03		
Size C	Document Number C7HB0006.SCH	REV D0
Date: April 26, 1996	Sheet 6 of 11	

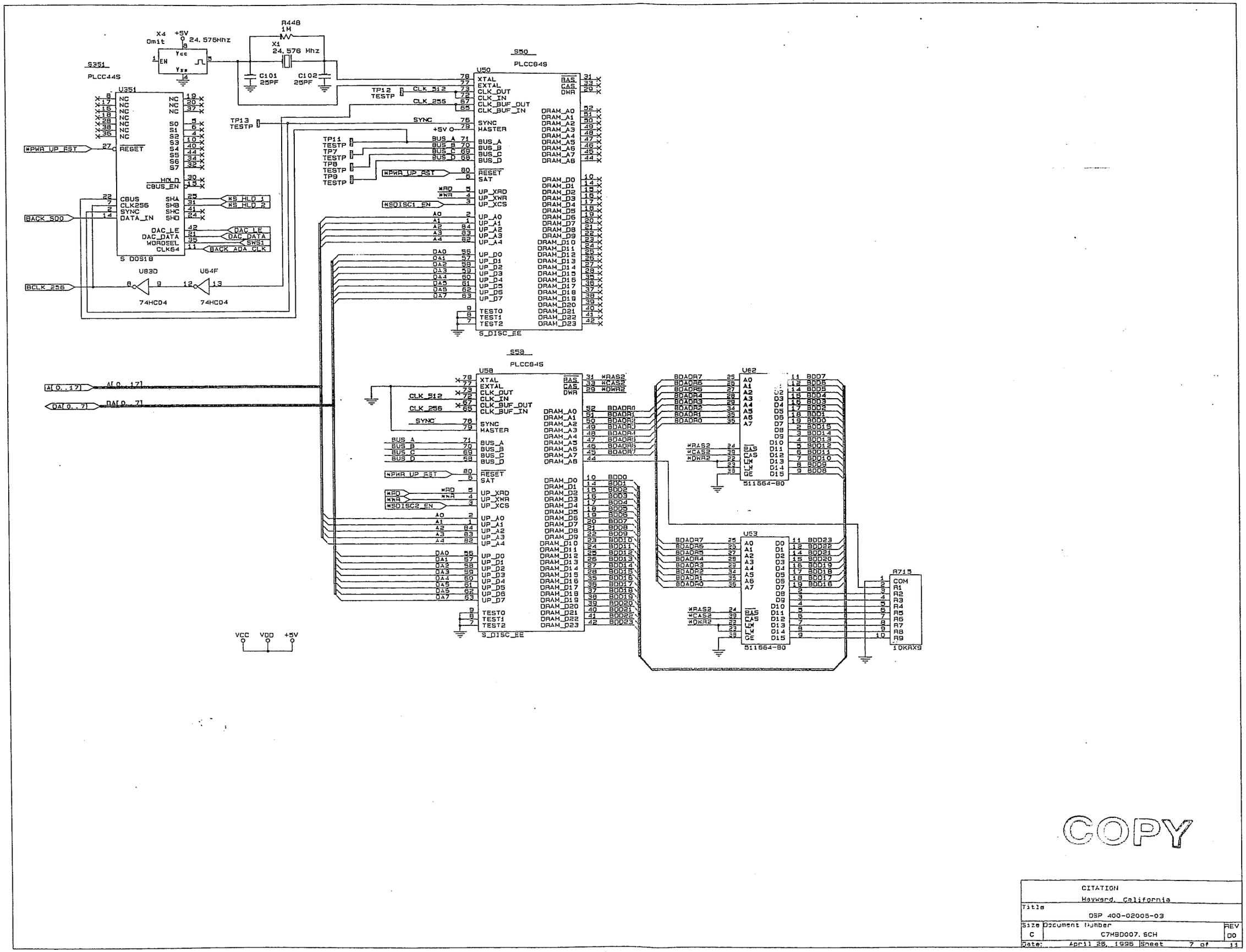

COPY

CITATION Hayward, California		
Title DSP 400-02005-03		
Size C	Document Number C7HBD007.SCH	REV D0
Date: April 25, 1996	Sheet 7 of 11	

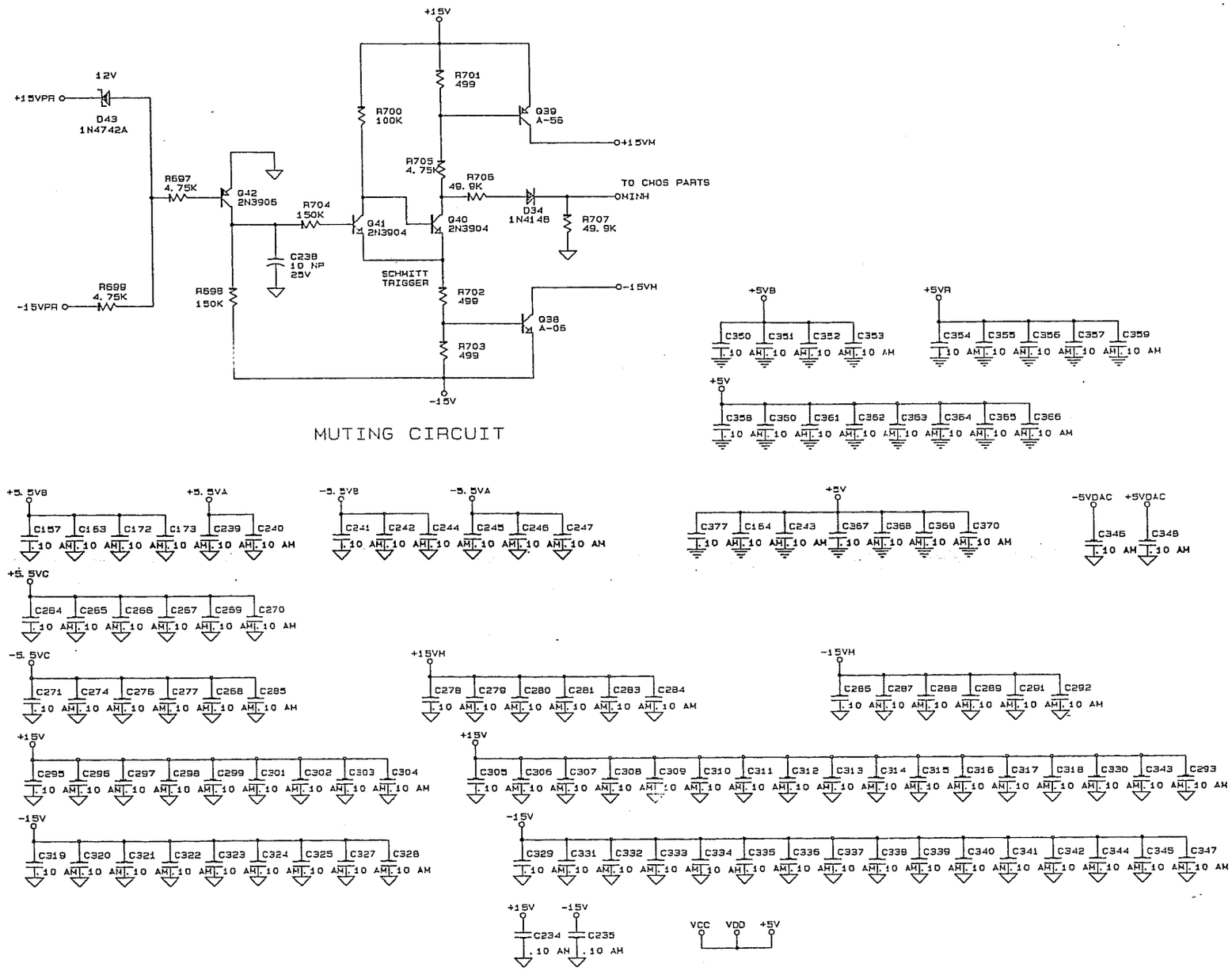

MUTING CIRCUIT

COPY

CITATION Hayward, California		
Title MUTING 400-02006-03		
Size C	Document Number C7M00008.SCH	REV D0
Date: April 26, 1986	Sheet 8 of 11	

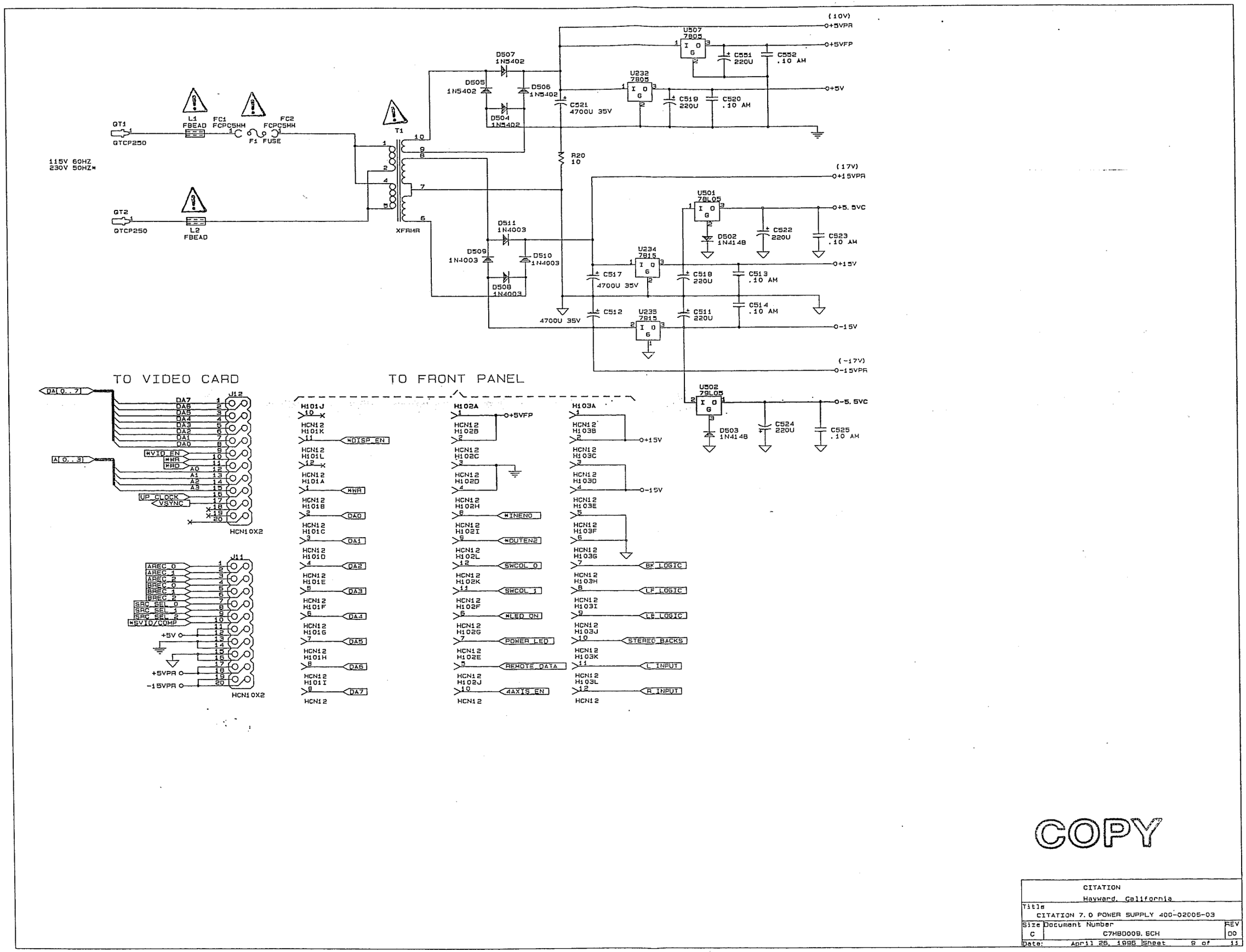

COPY

CITATION Hayward, California		
Title CITATION 7.0 POWER SUPPLY 400-02005-03		
Size C	Document Number C7MB0009.SCH	REV 00
Date: April 26, 1995	Sheet 9 of 11	

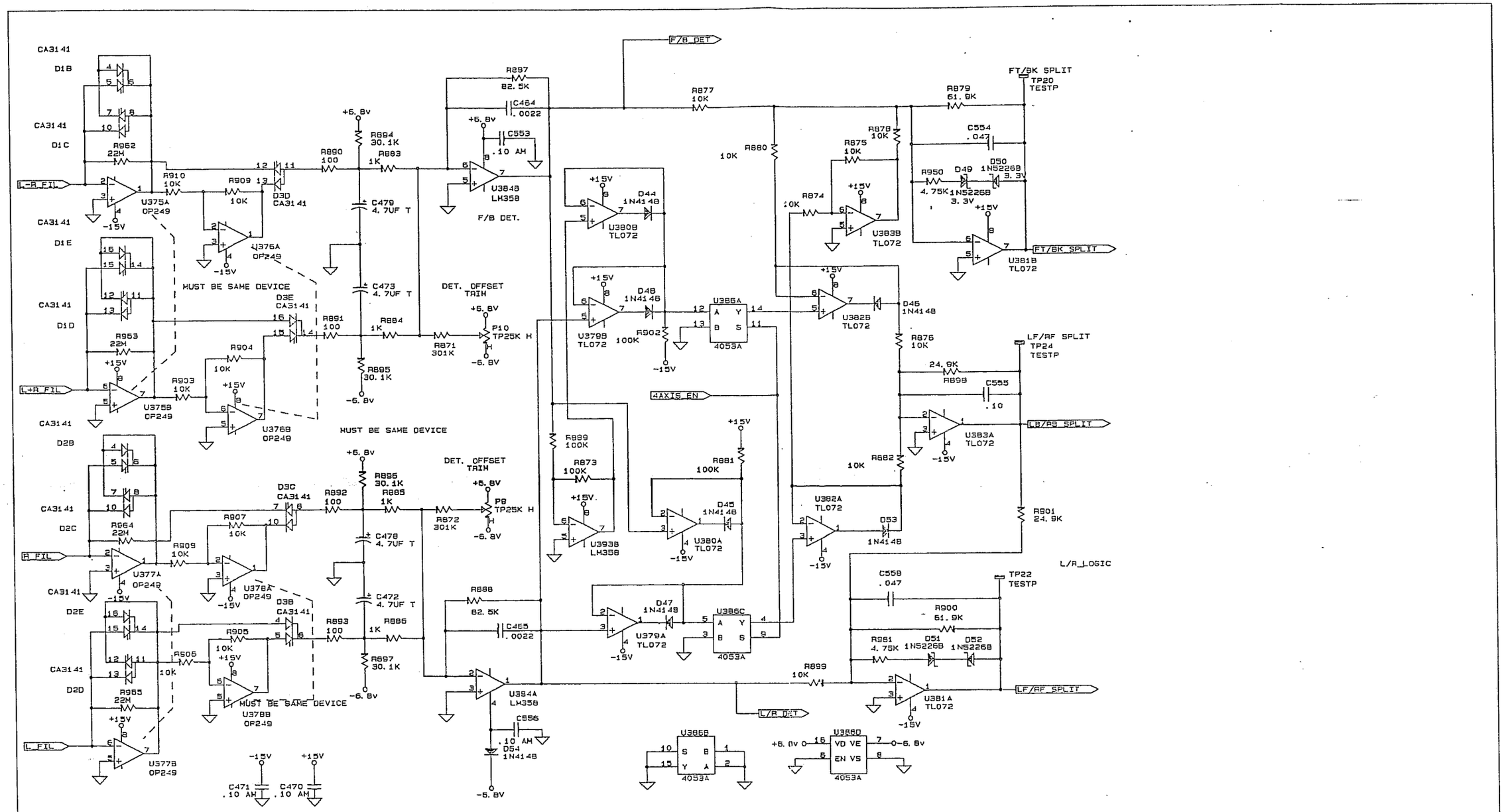

COPY

CITATION Hayward, California		
Title CITATION 7.0 CVG DET/SPLITTER 400-02005-03		
Size C	Document Number C7KB0010.SCH	REV D0
Date: April 26, 1995	Sheet 10 of 11	

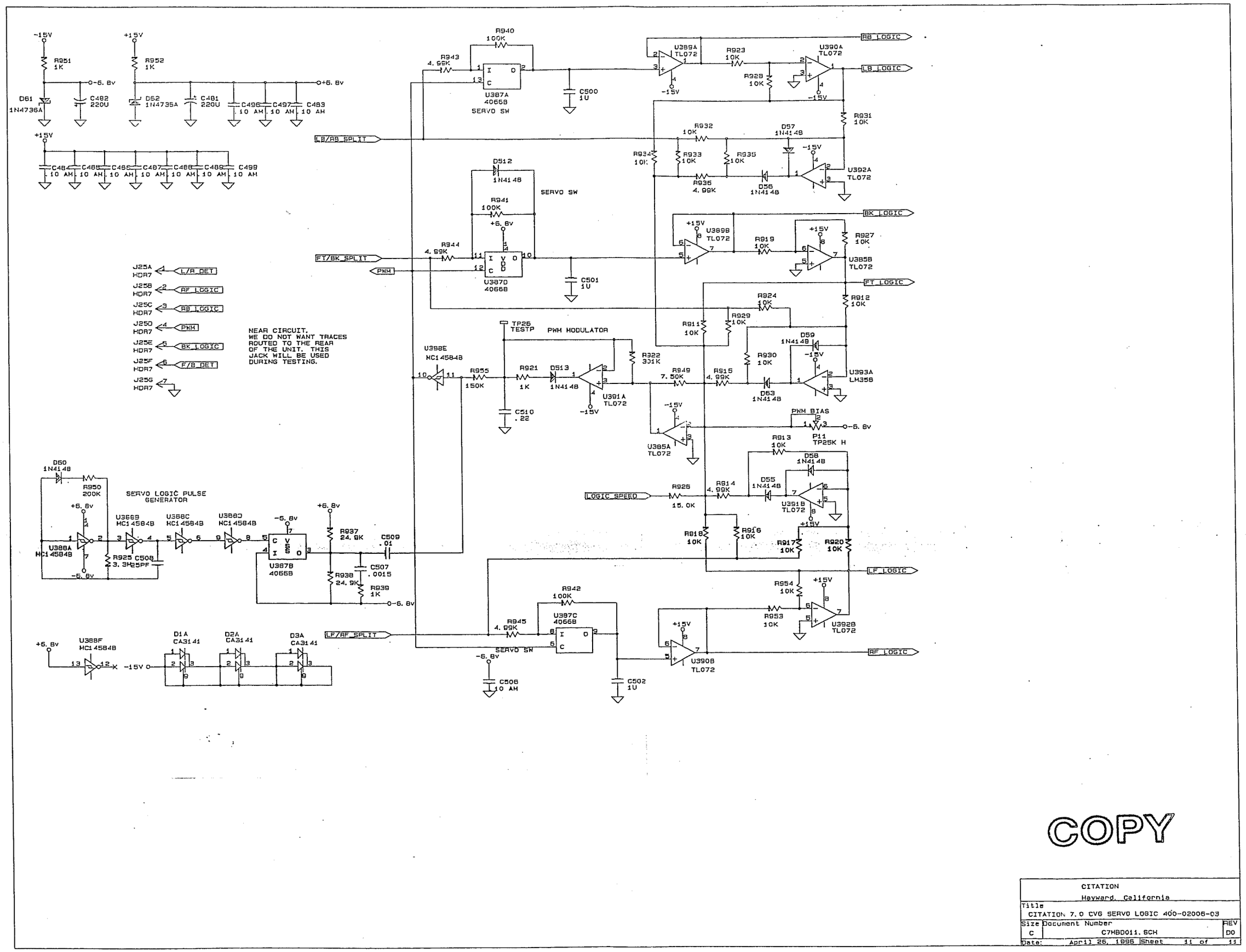

COPY

CITATION Hayward, California		
Title CITATION 7.0 CVG SERVO LOGIC 400-02006-03		
Size C	Document Number C7MBD011.SCH	REV D0
Date: April 26, 1995	Sheet 11 of 11	

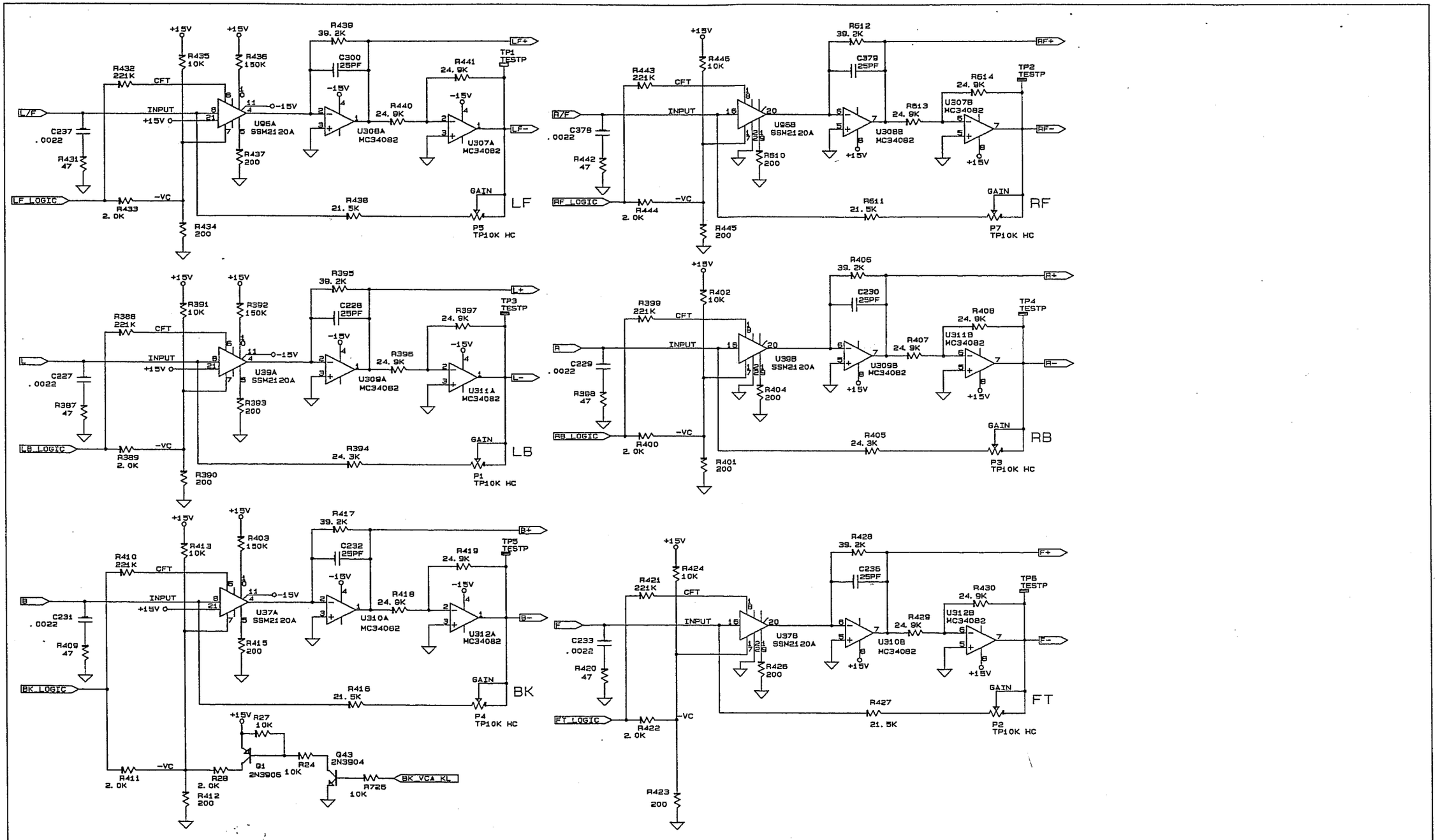

COPY

CITATION Hayward, California		
Title VCA CIRCUITS 400-02006-03		
Size C	Document Number C7H80202.SCH	REV D2
Date: September 5, 1995	Sheet 2 of 11	

ALIAS FILTERS

ANALOG TO DIGITAL CONVERTER

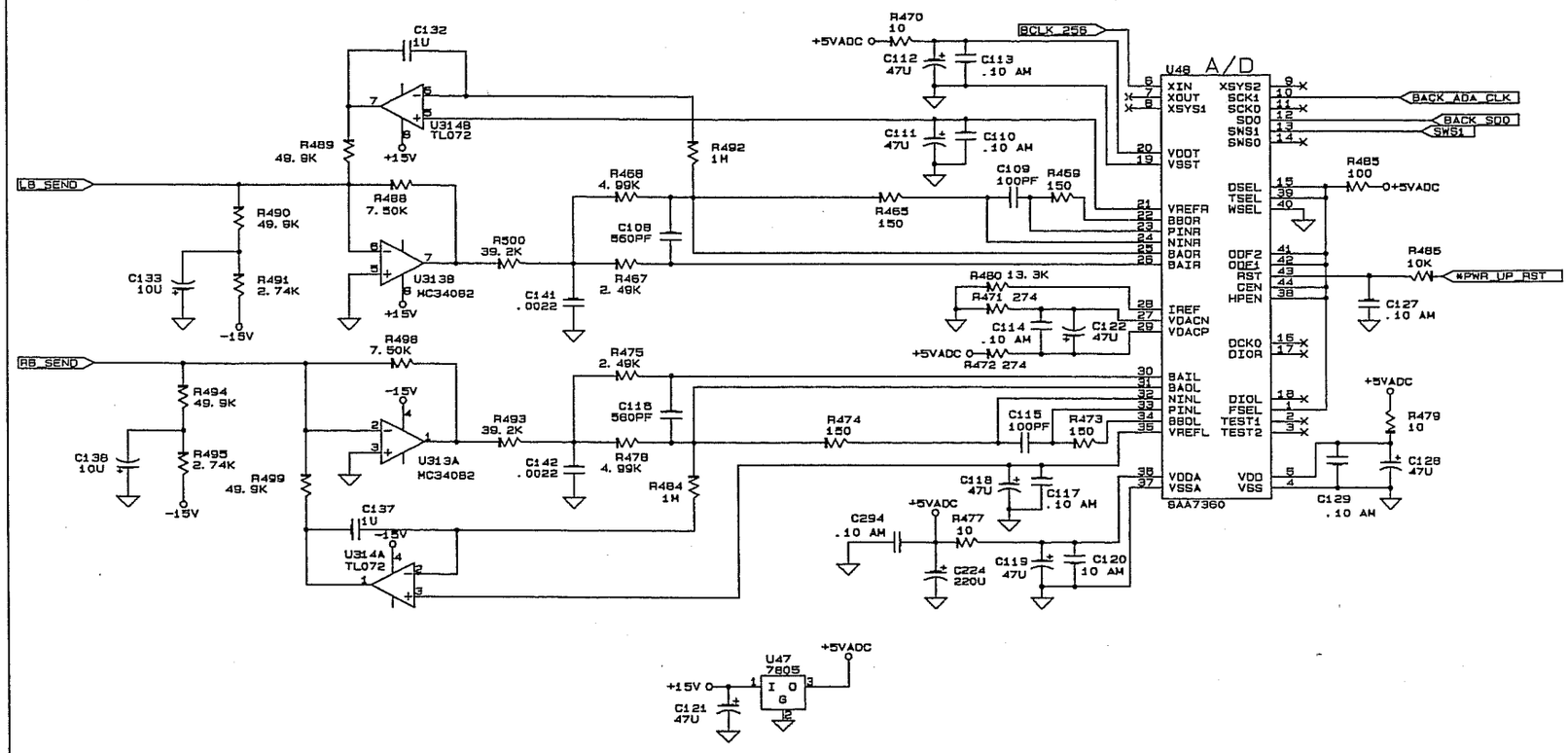

COPY

CITATION Hayward, California		
Title A/D CONVERTER 400-R2006-03		
Size C	Document Number C7MB0203, 8CH	REV D2
Date: September 5, 1995	Sheet 3 of 11	

DIGITAL TO ANALOG CONVERTER

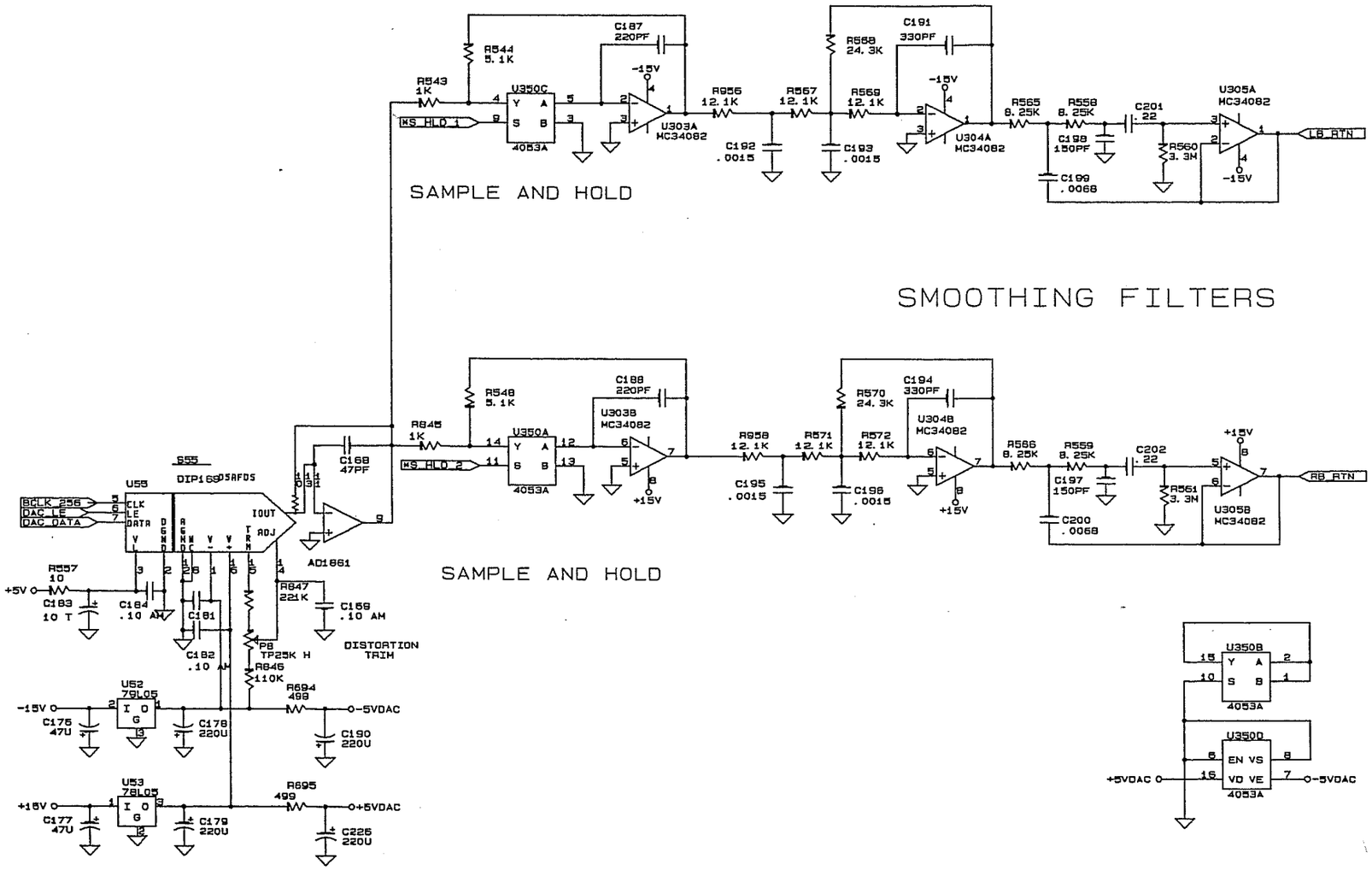

COPY

CITATION Hayward, California		
Title D/A CONVERTER 400-02006-06		
Size C	Document Number C7HBD204.SCH	REV D2
Date: September 5, 1995	Sheet 4 of 11	

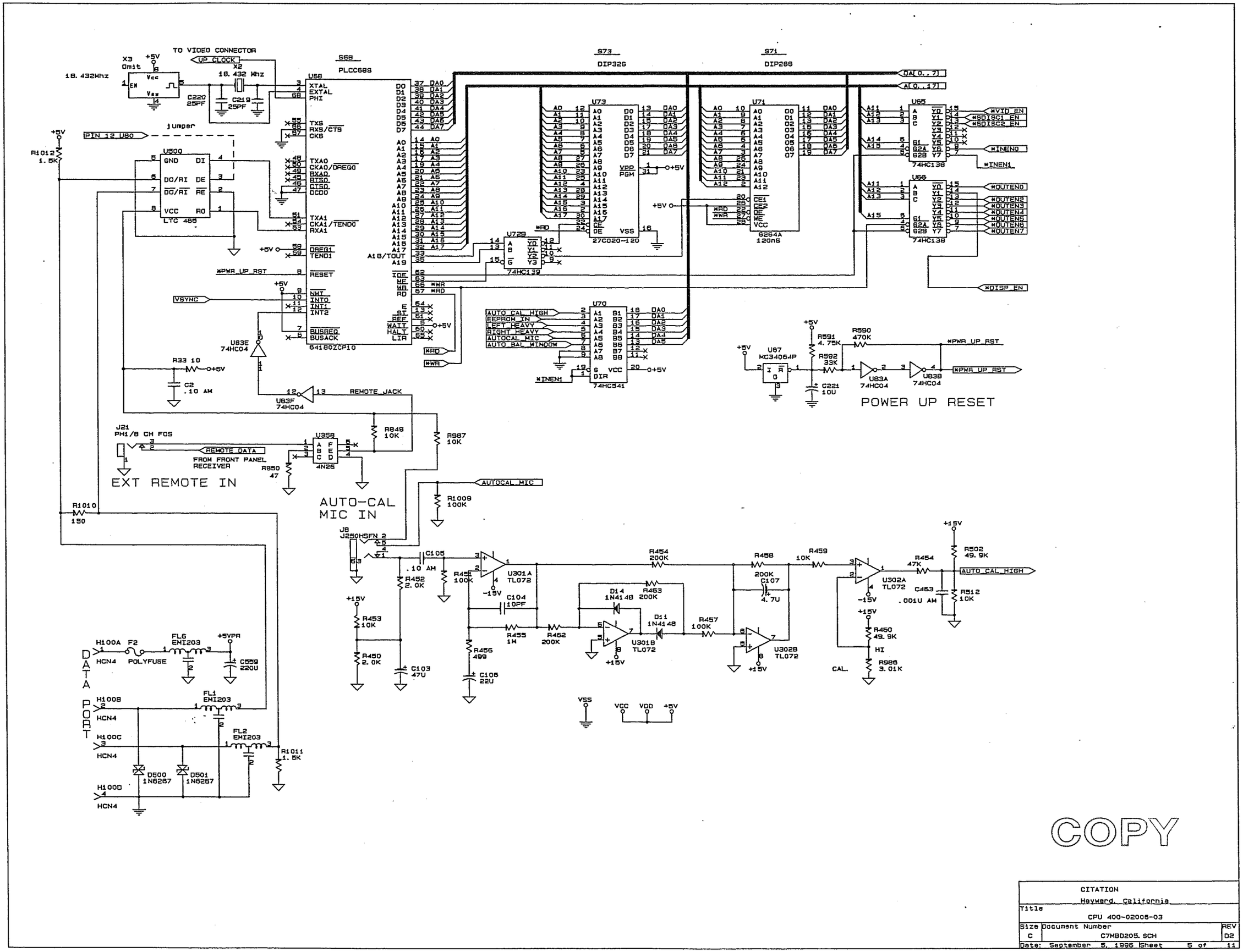

COPY

CITATION Hayward, California		
Title CPU 400-02006-03		
Size C	Document Number C7H80205.SCH	REV D2
Date: September 5, 1996 Sheet 5 of 11		

HARMAN SYSTEM CONTROL

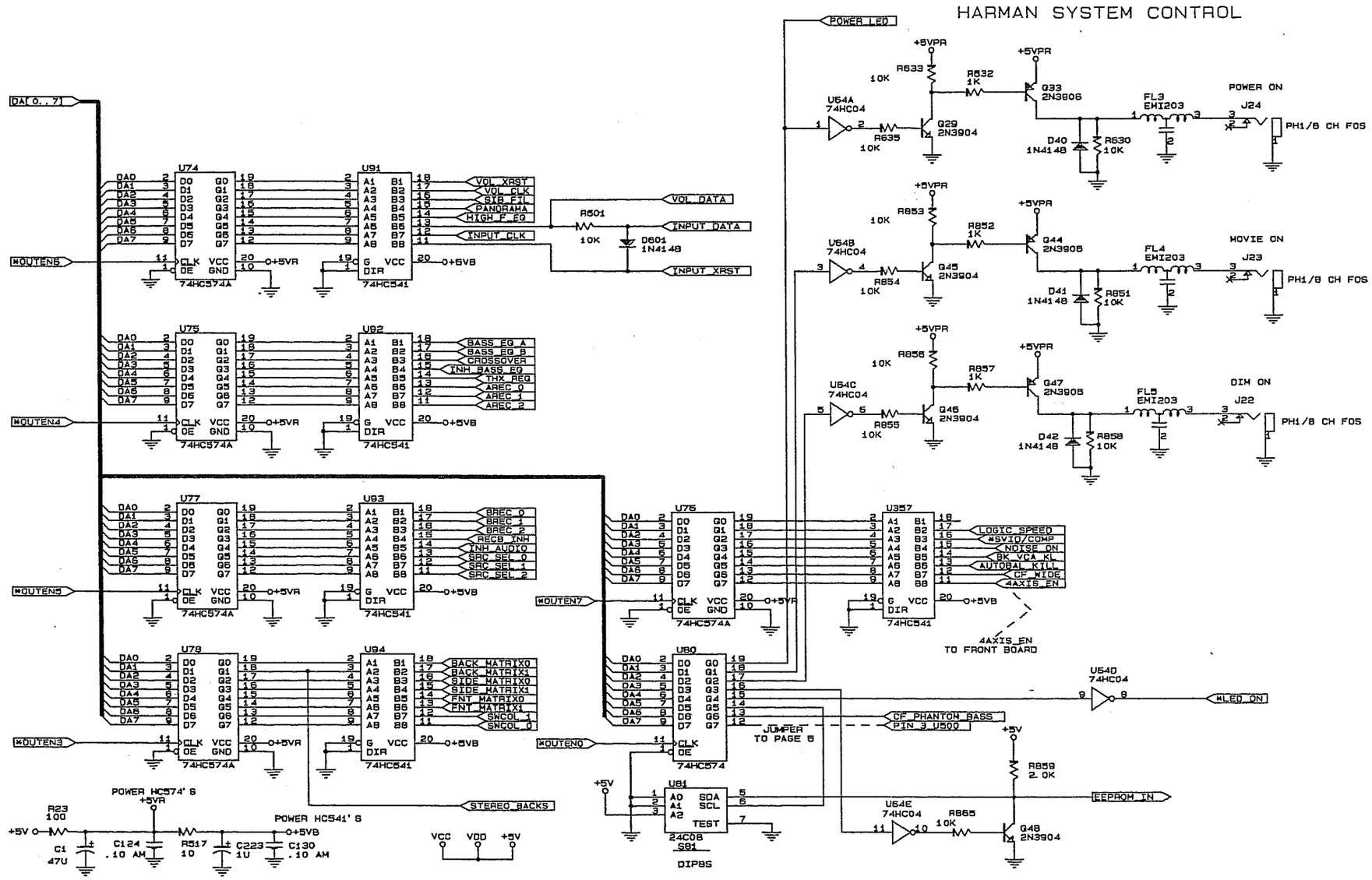

COPY

CITATION Hayward, California		
Title LATCH 400-02006-03		
Size C	Document Number C7MB0206.SCH	REV D2
Date: September 5, 1995	Sheet 5 of 11	

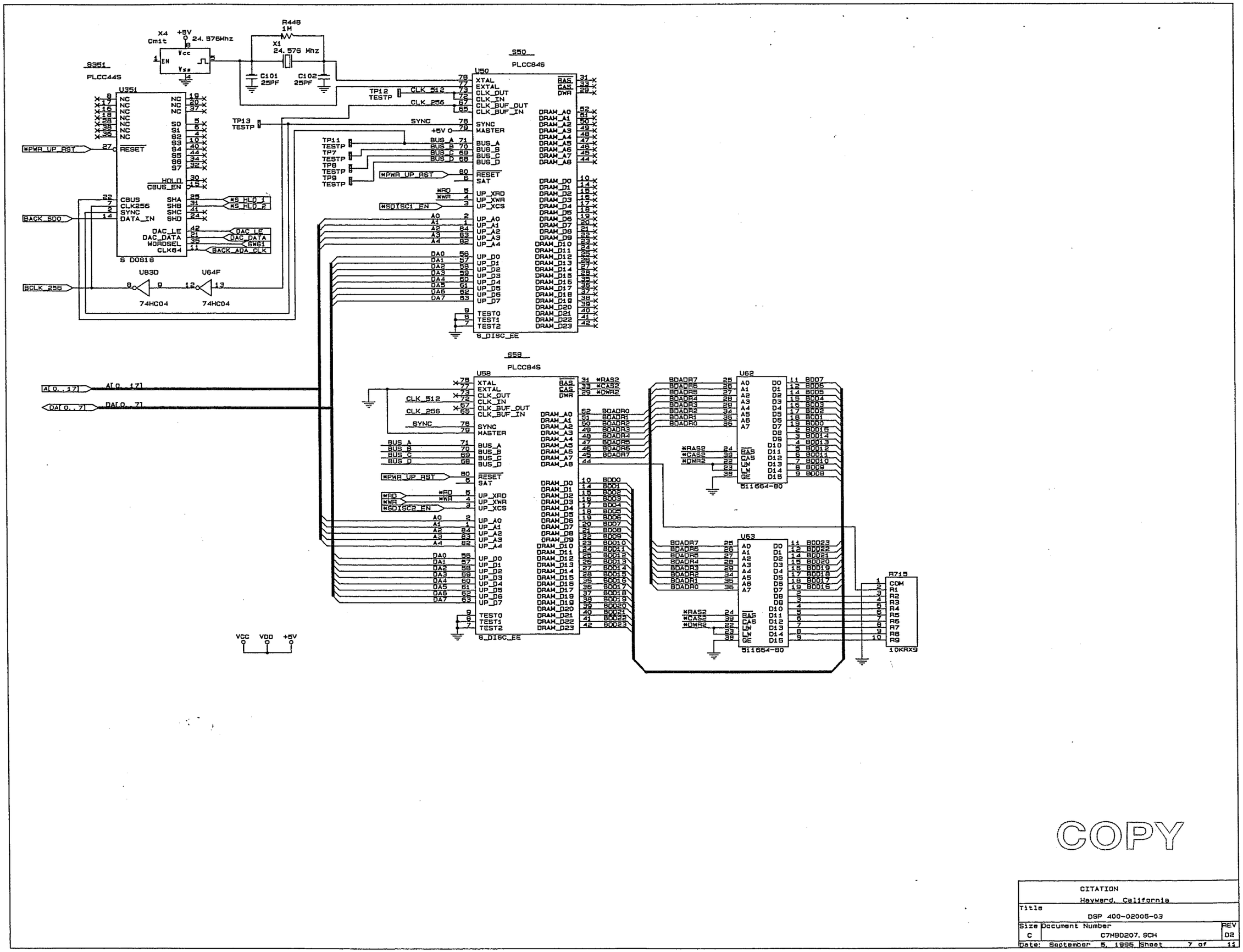

CITATION Hayward, California		
Title DSP 400-02006-03		
Size C	Document Number C7HBD207.SCH	REV D2
Date: September 5, 1995	Sheet 7 of 11	

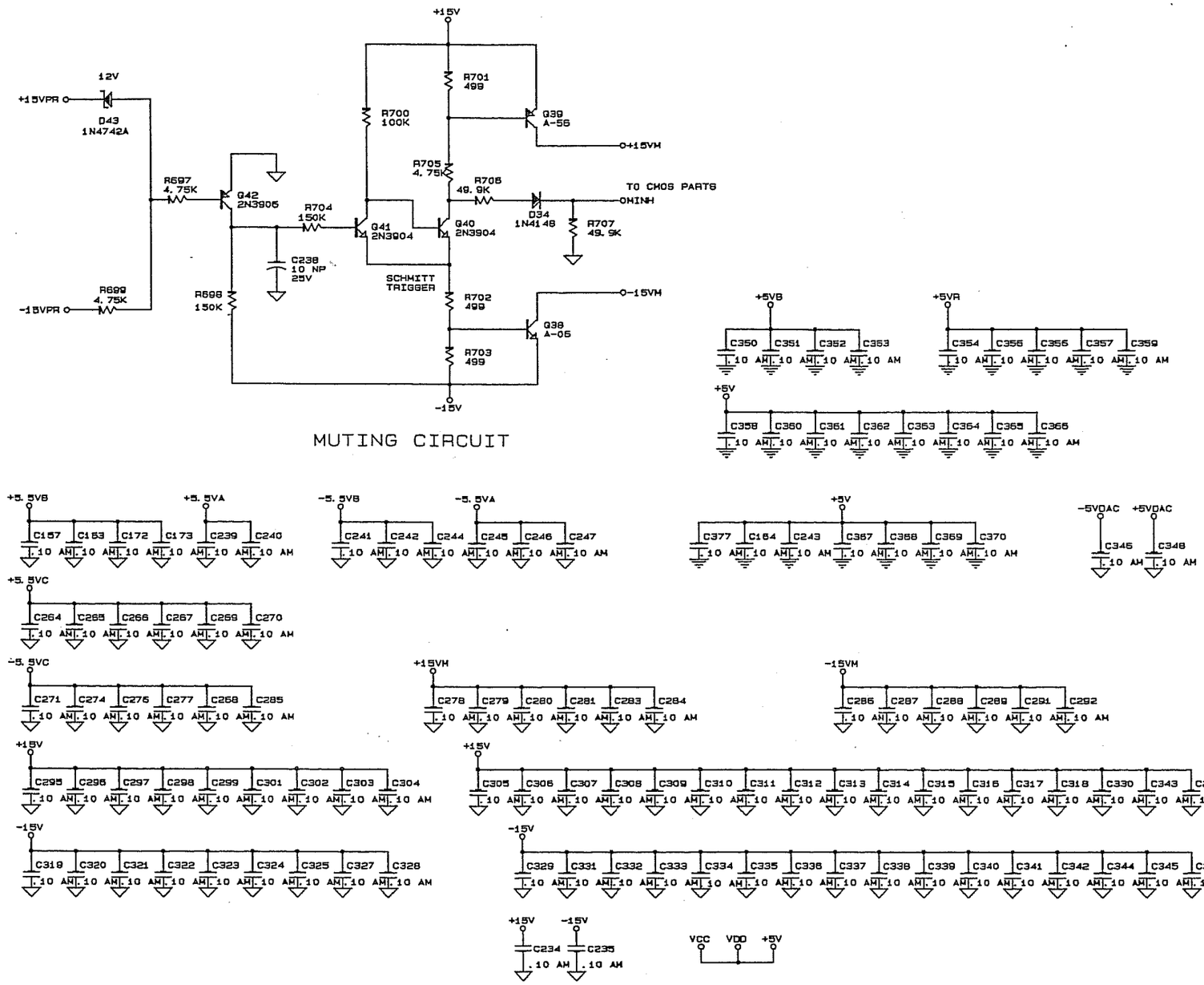

MUTING CIRCUIT

COPY

CITATION Hayward, California		
Title MUTING 400-02006-03		
Size C	Document Number C7MB0208.SCH	REV D2
Date: September 5, 1995 Sheet 8 of 11		

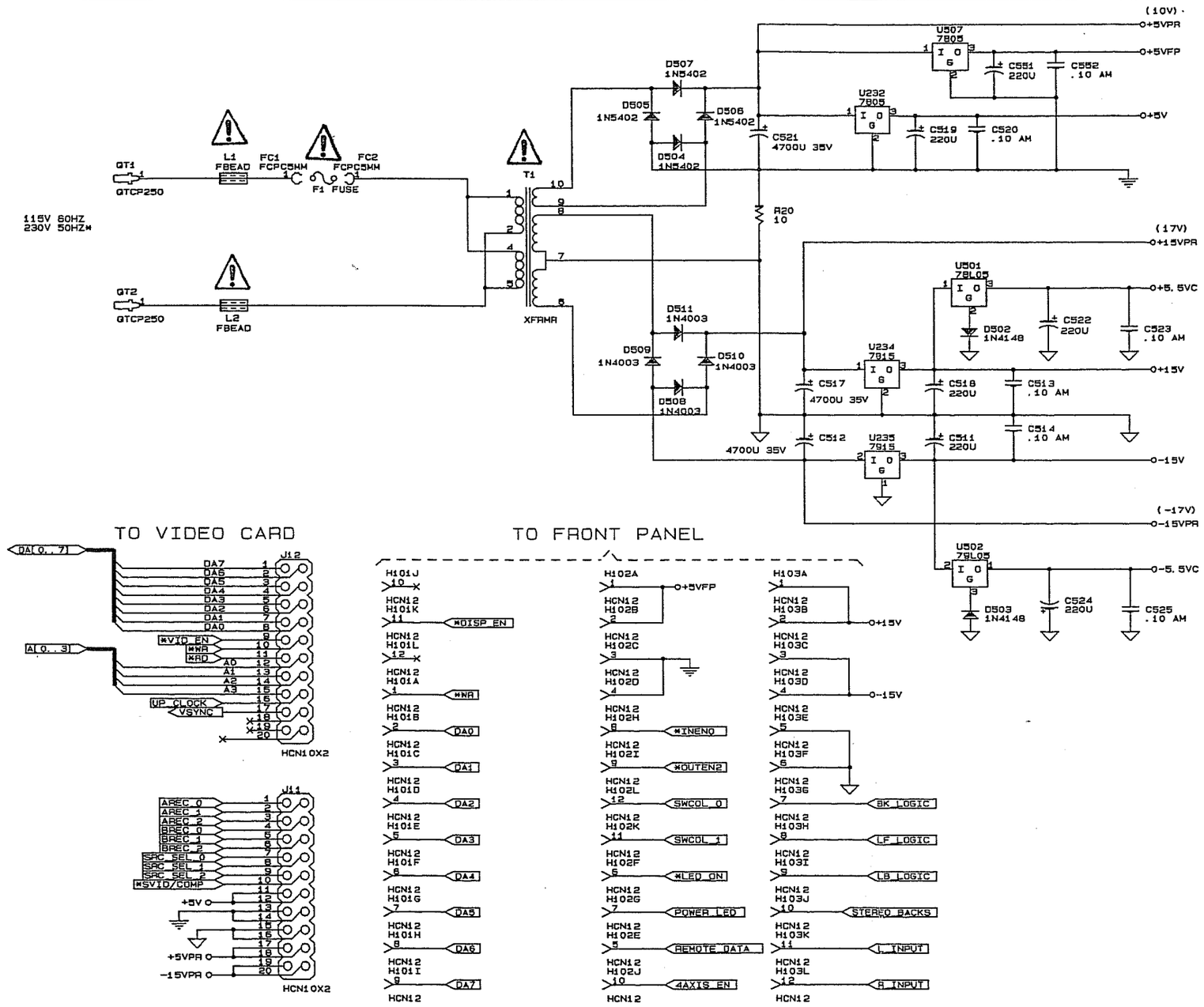

COPY

CITATION Hayward, California		
Title CITATION 7.0 POWER SUPPLY 400-02005-03		
Size C	Document Number C7MBD209.SCH	REV D2
Date: September 5, 1995	Sheet 9 of 11	

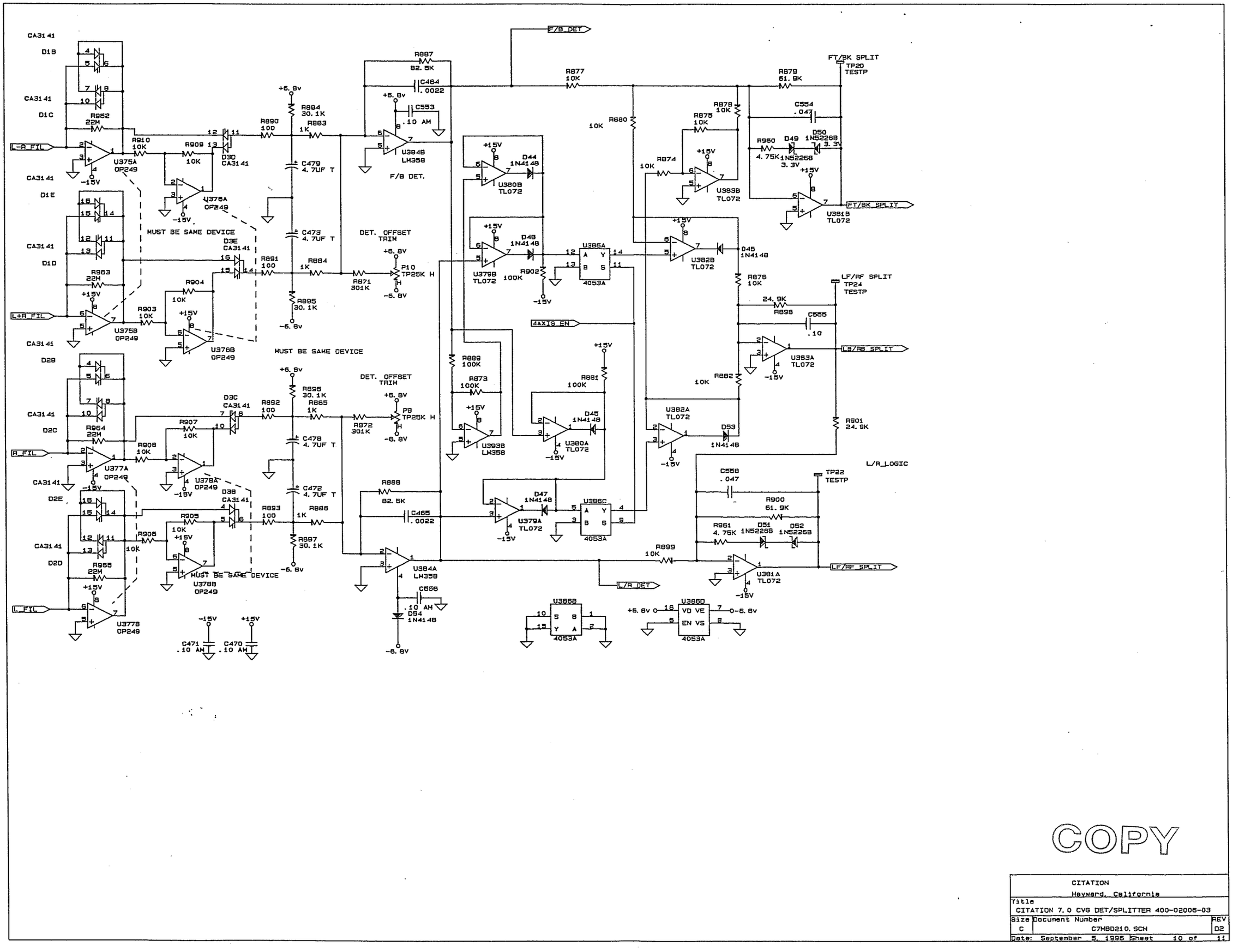

COPY

CITATION Hayward, California	
Title CITATION 7.0 CVG DET/SPLITTER 400-02006-03	
Size C	Document Number C7MBD210.SCH
REV D2	
Date: September 5, 1995	Sheet 10 of 11

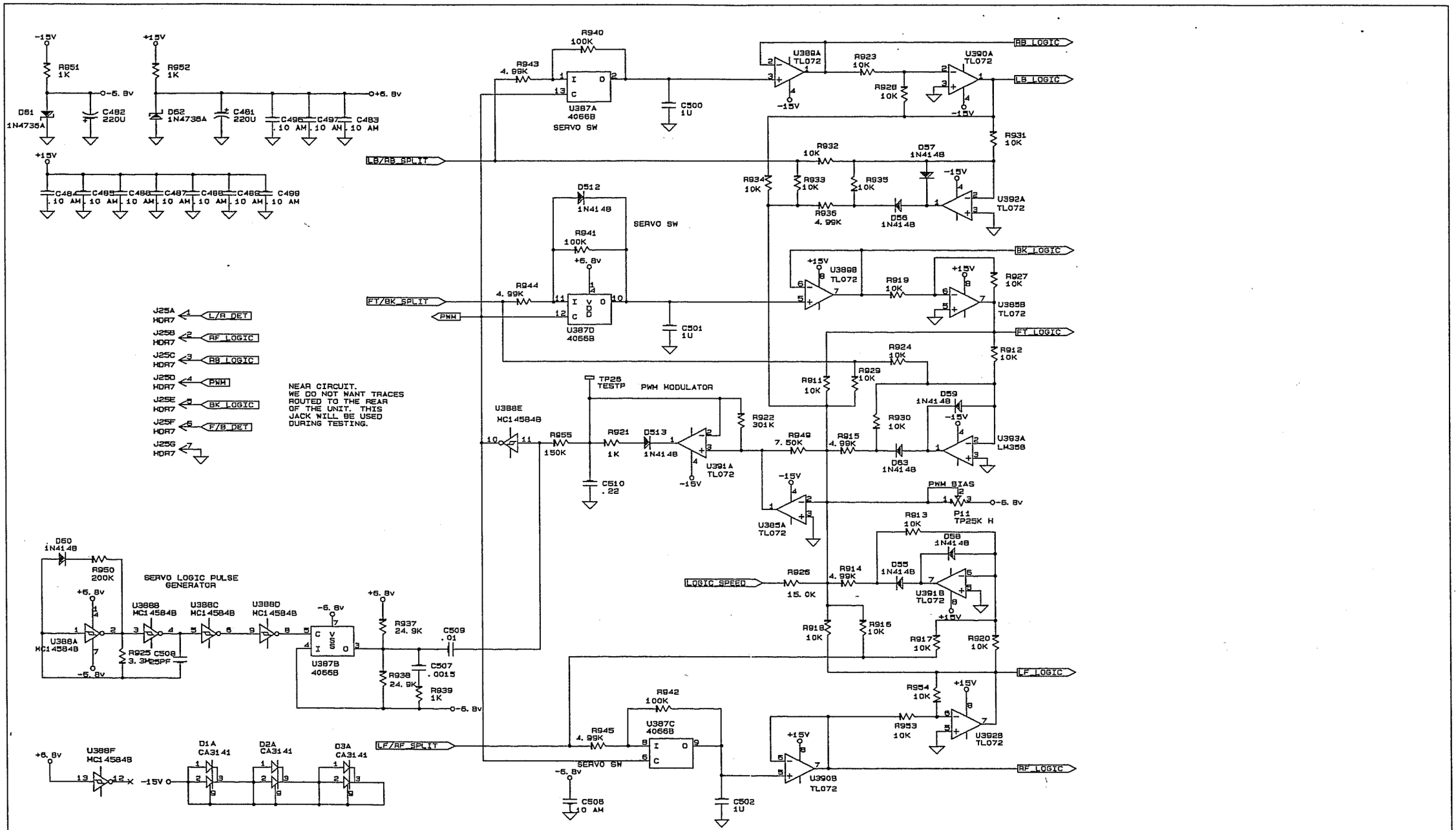

COPY

CITATION Hayward, California	
Title CITATION 7.0 CVG SERVO LOGIC 400-02006-03	
Size C	Document Number C7MB0211.SCH	REV D2
Date: September 5, 1995	Sheet 11 of 11

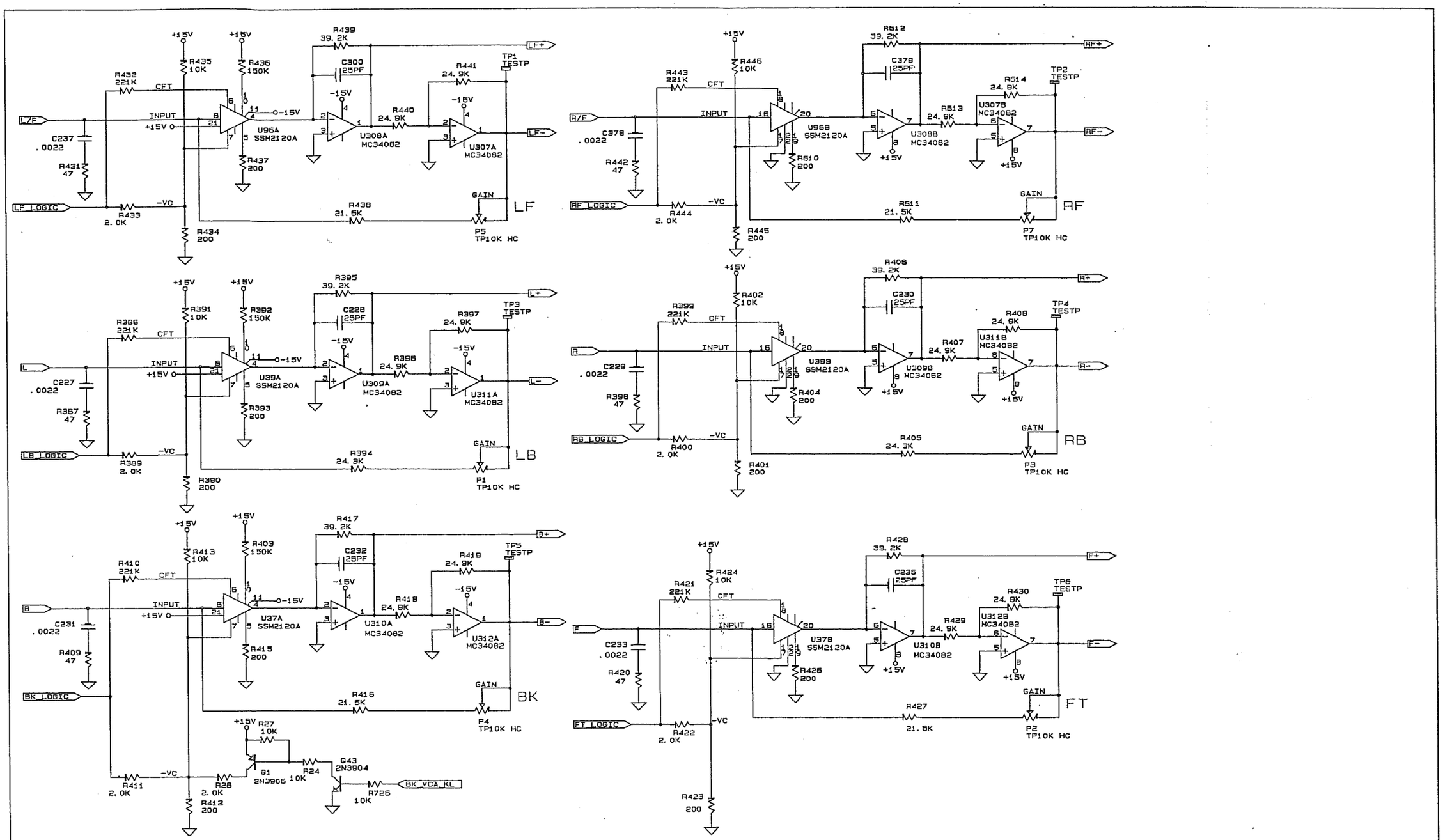

CITATION Hayward, California		
Title VCA CIRCUITS		
Size C	Document Number C7MBC302.SCH	REV C3
Date: April 26, 1995	Sheet 2 of 11	

ALIAS FILTERS

ANALOG TO DIGITAL CONVERTER

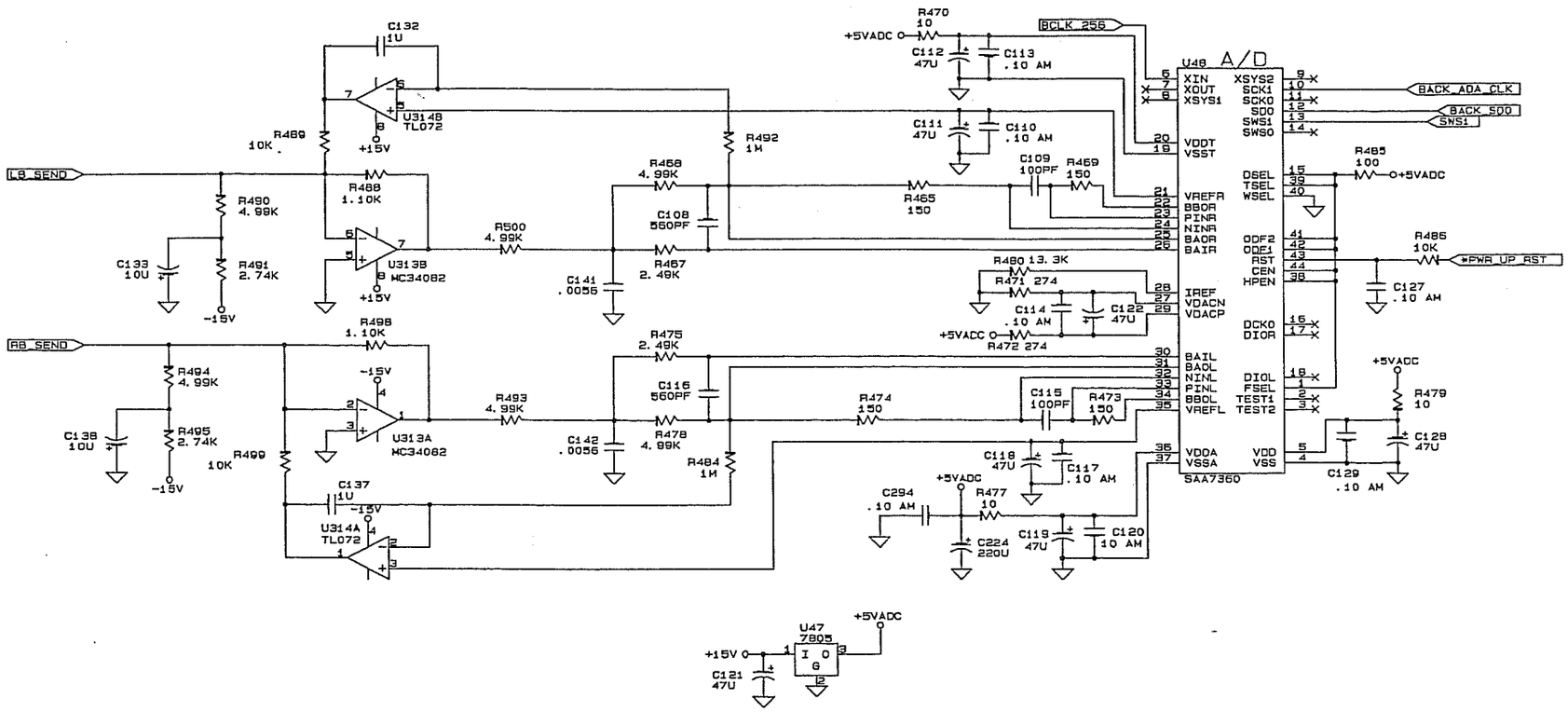

CITATION Hayward, California		
Size C	Document Number C7MBC303.SCH	REV C3
Date: April 26, 1996	Sheet 3 of 11	

DIGITAL TO ANALOG CONVERTER

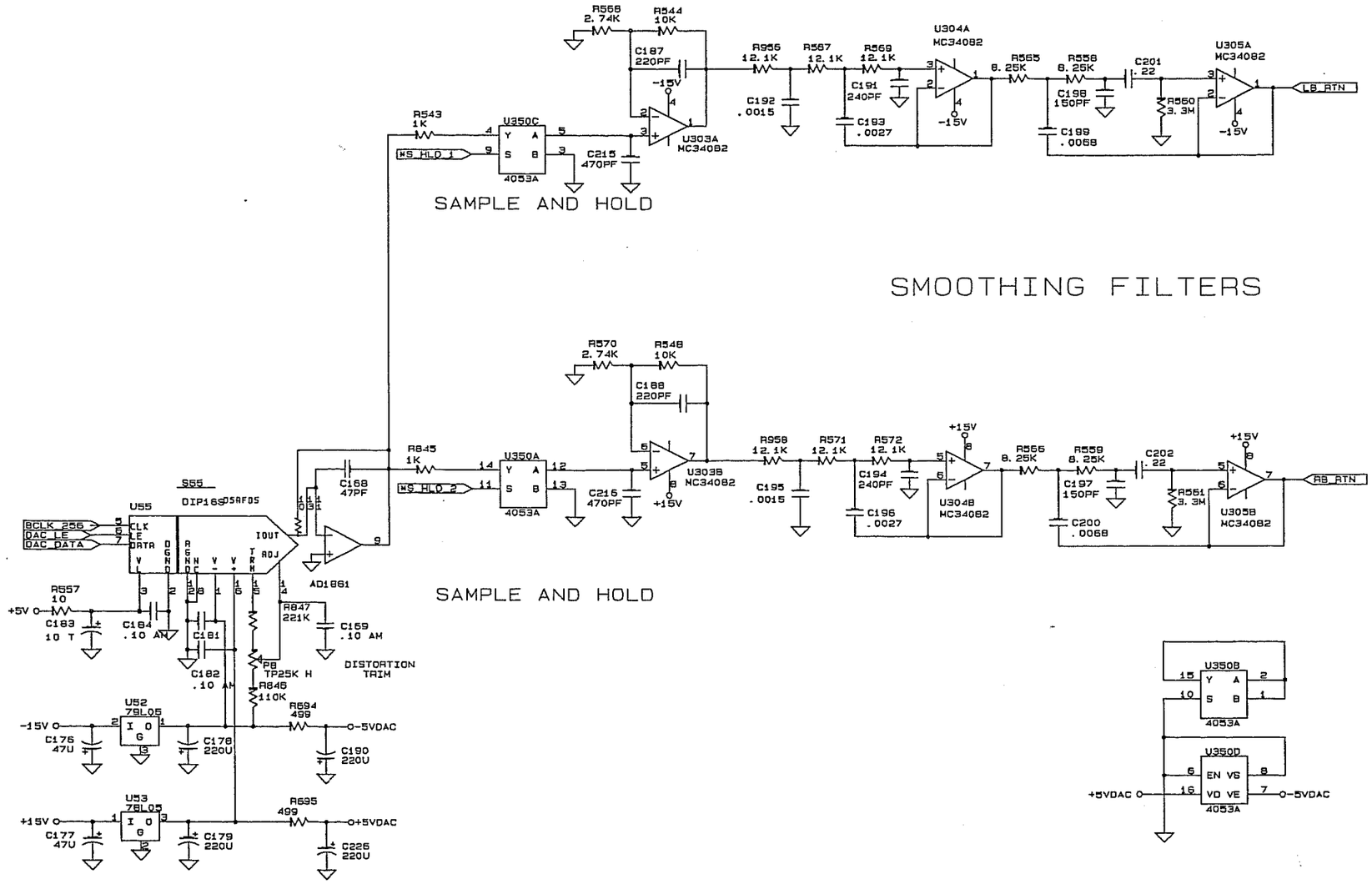

CITATION Hayward, California		
Size C	Document Number C7MBC304, SCH	REV C3
Date: April 26, 1995	Sheet 4 of 11	

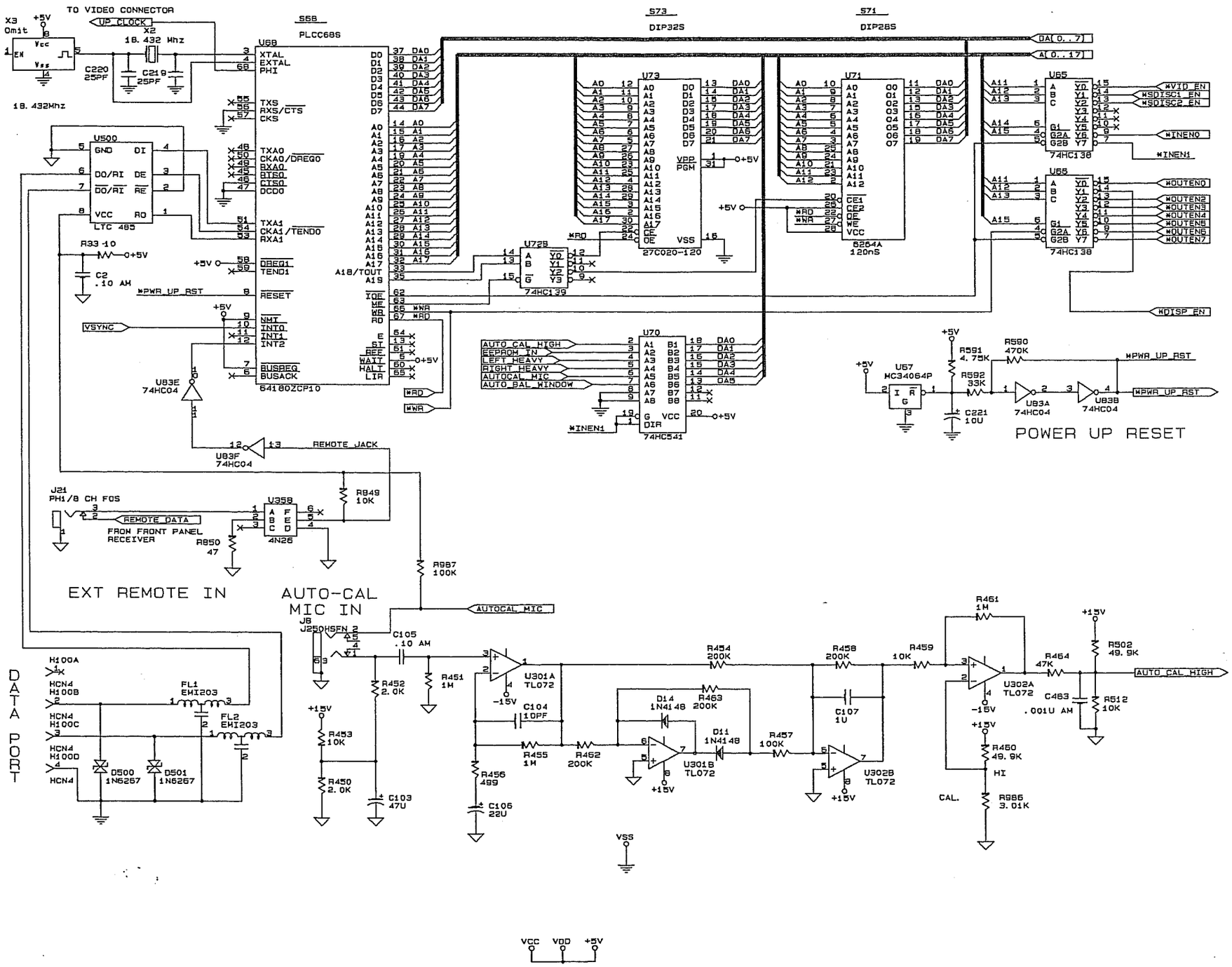

CITATION Hayward, California		
Size C	Document Number C7MBC305.SCH	REV C3
Date: April 26, 1995	Sheet 5 of 11	

HARMAN SYSTEM CONTROL

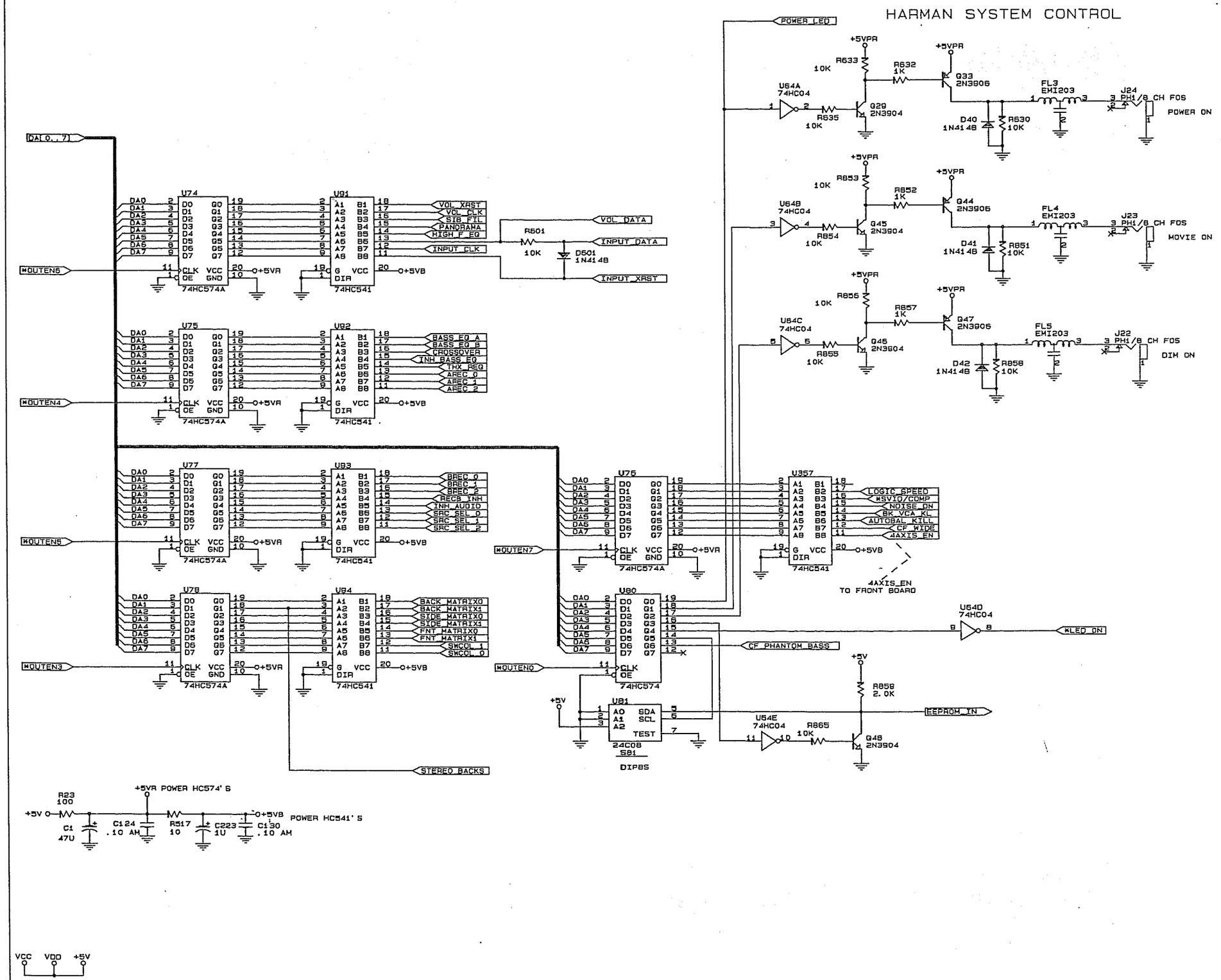

CITATION Hayward, California		
Size C	Document Number C7MBC306.SCH	REV C3
Date: April 25, 1995	Sheet 6 of 11	

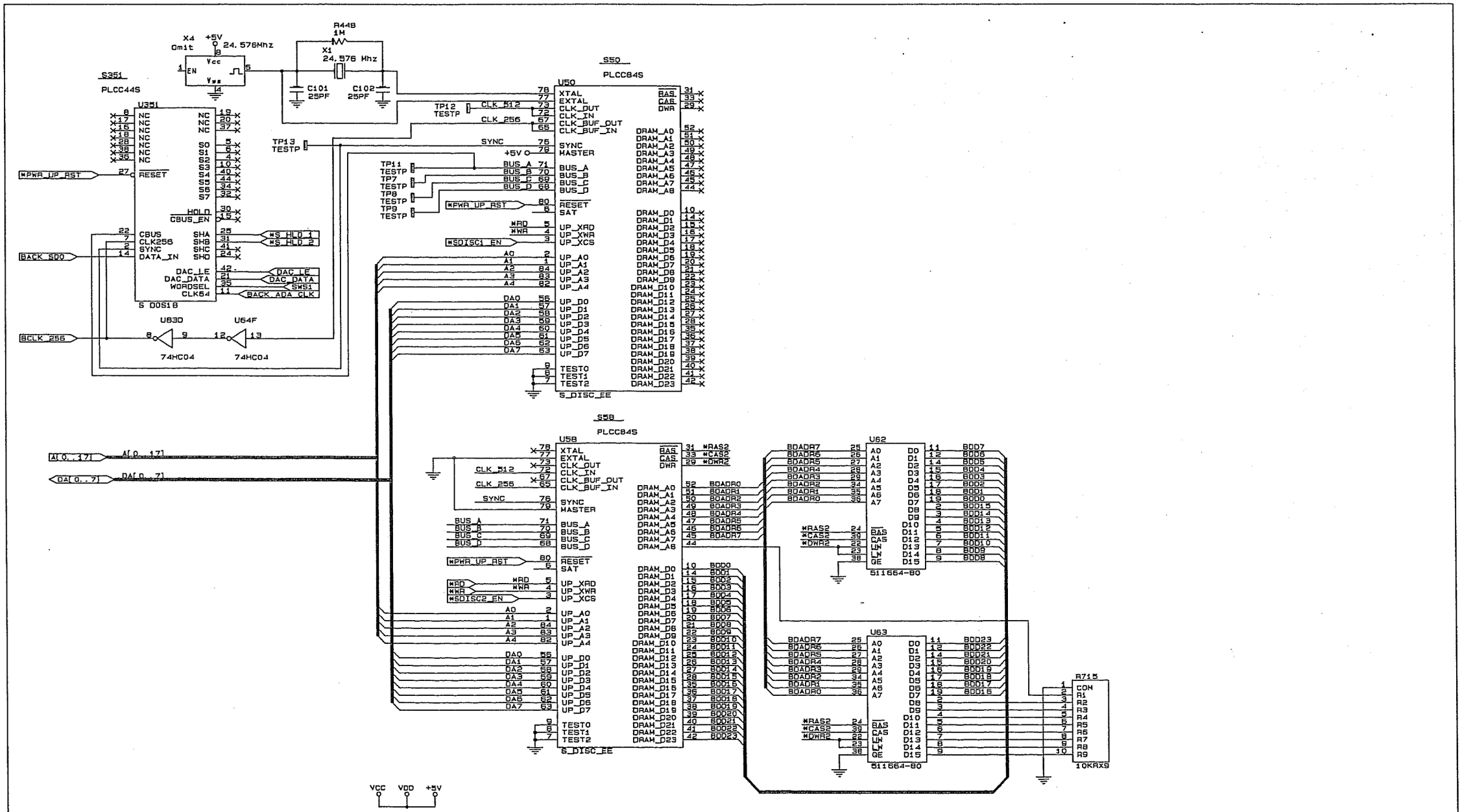

CITATION
Hayward, California

Size	Document Number	REV
C	C7MBC307.SCH	C3

Date: April 26, 1995 Sheet 7 of 11

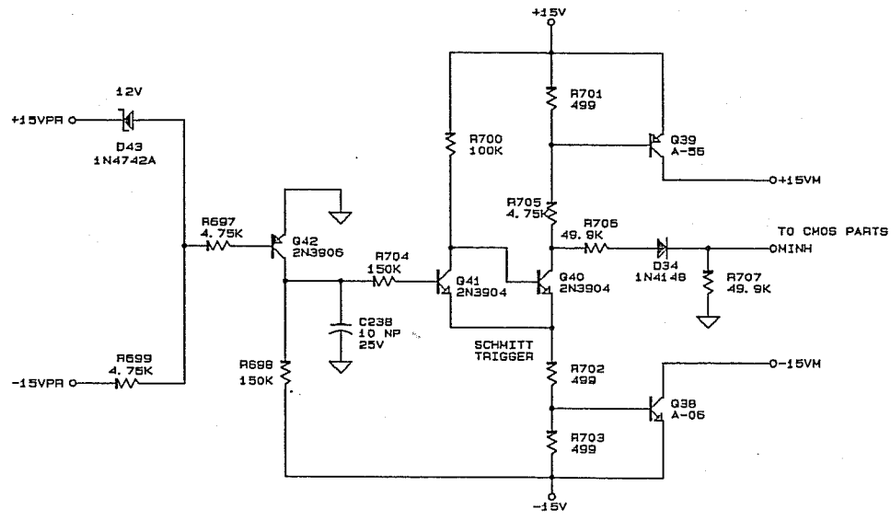

MUTING CIRCUIT

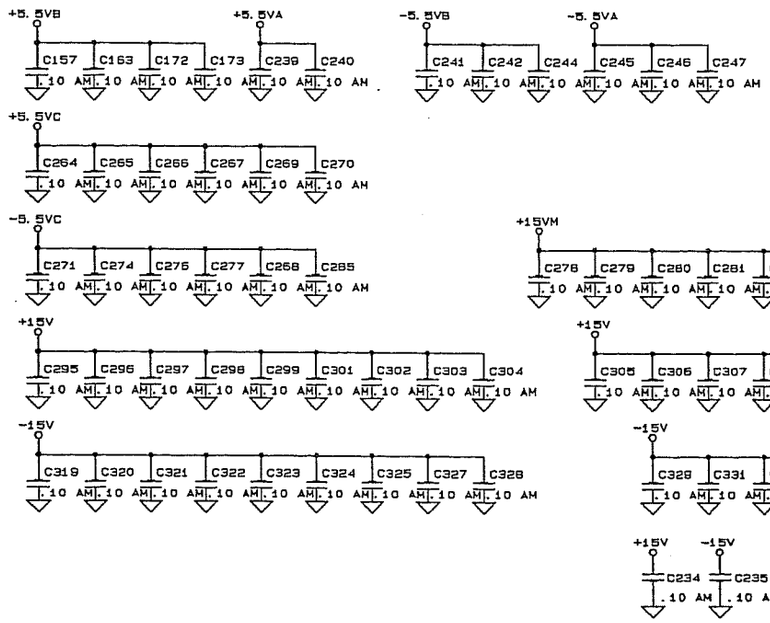

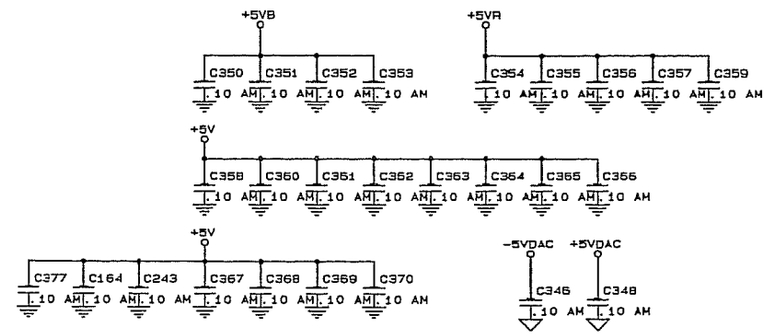

CITATION Hayward, California		
Size C	Document Number C7MBC308.SCH	REV C3
Date: April 26, 1995	Sheet 8 of 11	

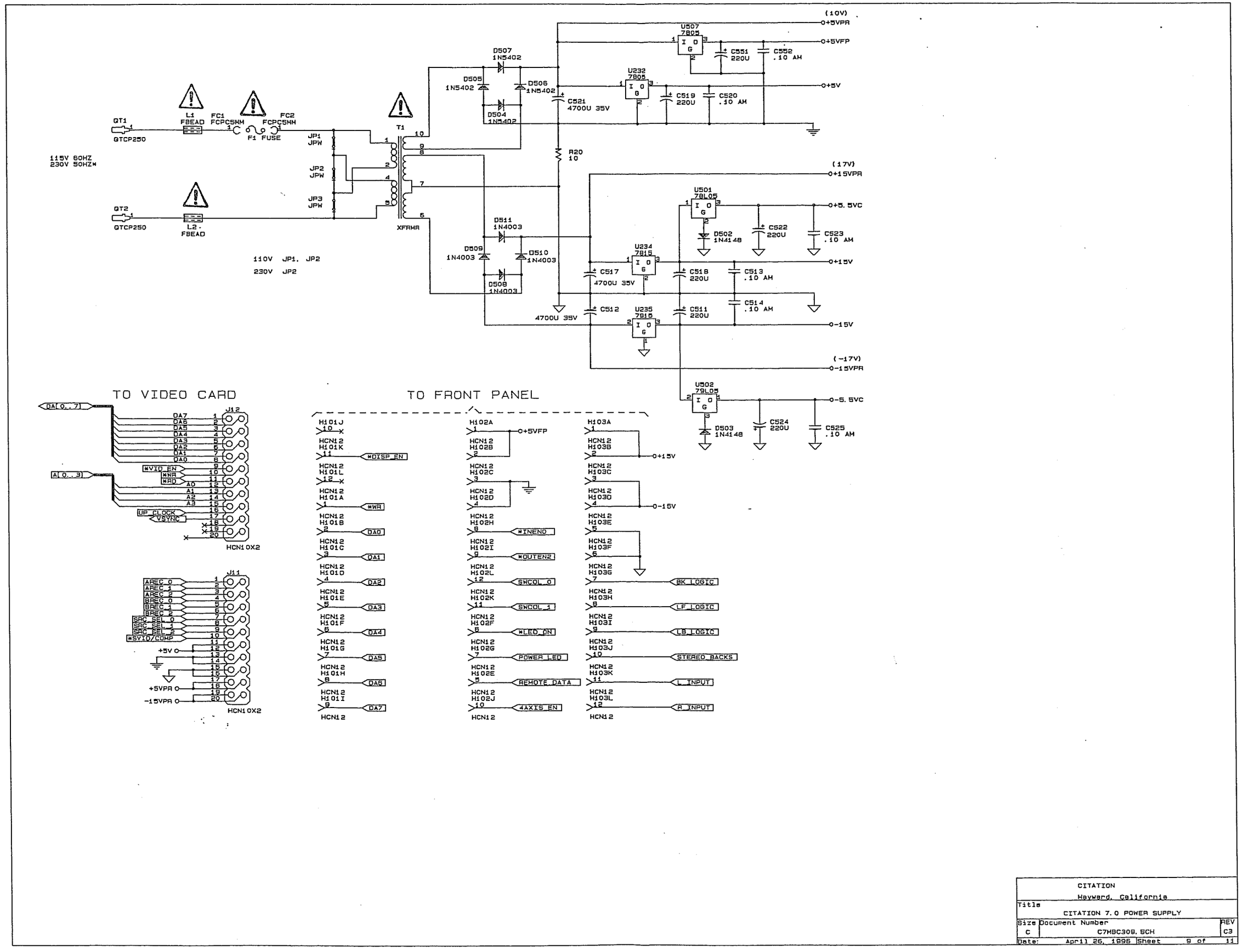

CITATION Hayward, California		
Title CITATION 7.0 POWER SUPPLY		
Size C	Document Number C7MBC309.SCH	REV C3
Date: April 26, 1995	Sheet 9 of 11	

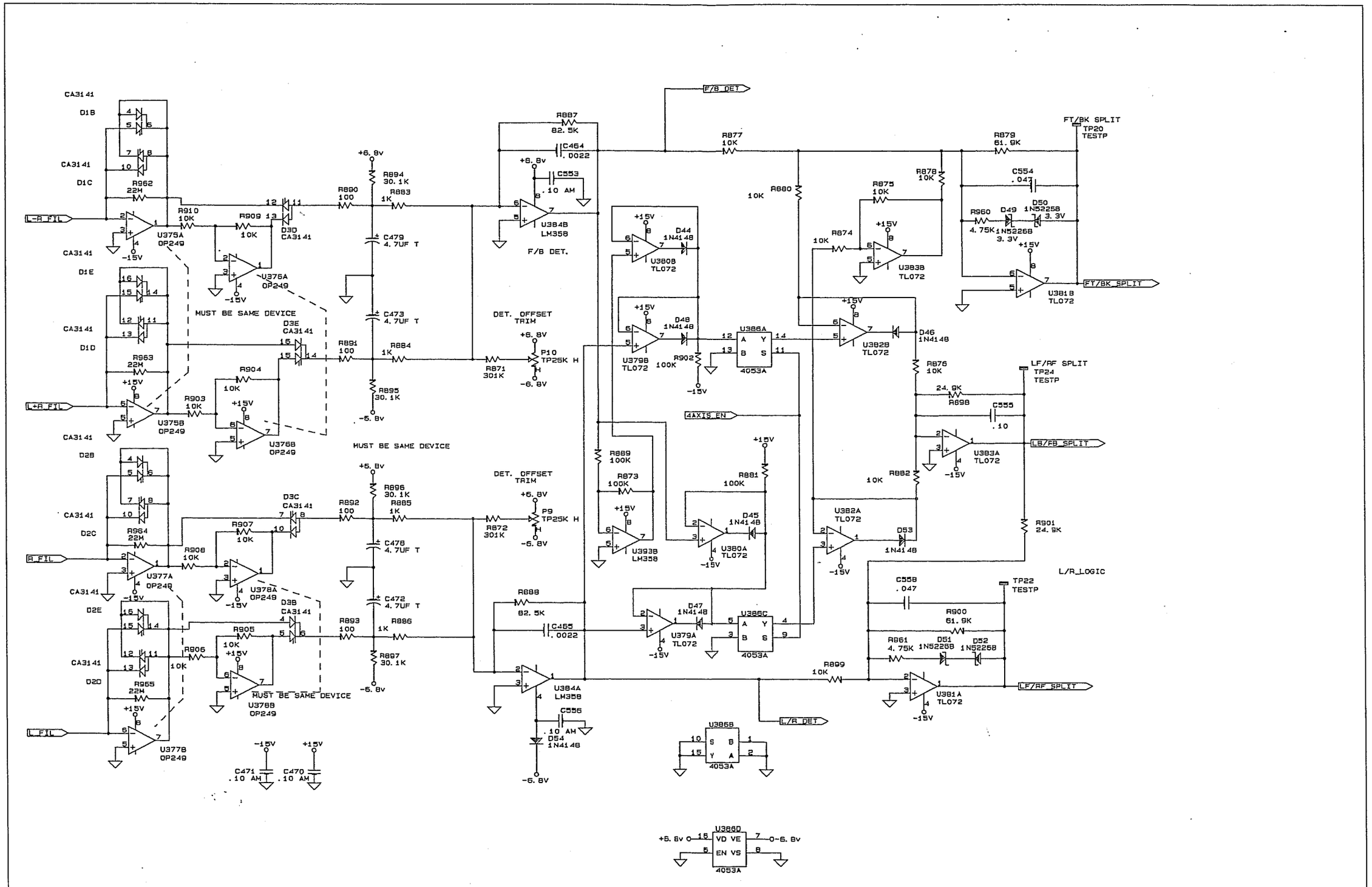

CITATION Hayward, California		
Title CITATION 7.0 CVG DET/SPLITTER		
Size C	Document Number C7MBC310.SCH	REV C3
Date: April 26, 1995	Sheet 10 of 11	

IC CHART								
TYPE	VOLTAGE/PIN NO.							REFERENCE DESIGNATOR
	V-	V+	+5V	AGND	DGND	+5.5V	-5.5V	
4053				8		16	7	U5
LM358	4	8						U6, U7, U8, U11, U12
74HC244			20		10			U2
74HC574			20		10			U3
LF353	4	8						U13, U14, U15
LM339	12	3						U9, U10

NOTES:

1. FOR CAPACITOR TYPE SEE PARTS LIST.
2. ALL RESISTORS ARE 1/8W, 5% CARBON FILM, UNLESS OTHERWISE SPECIFIED.

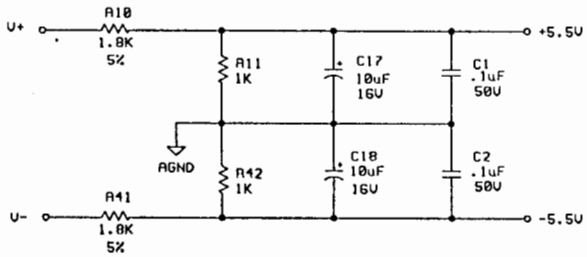

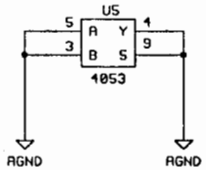

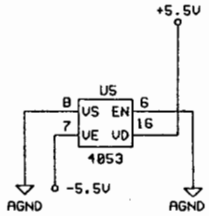

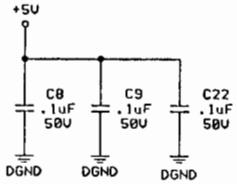

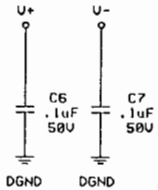

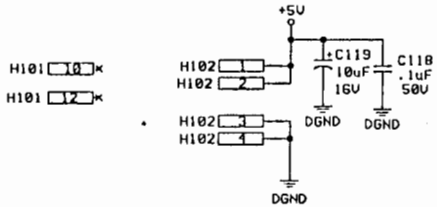

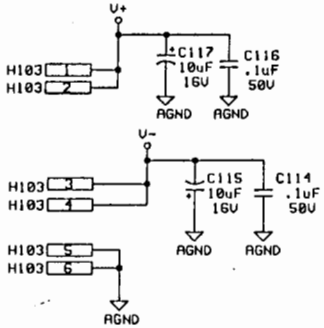

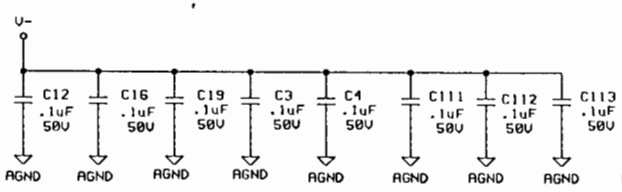

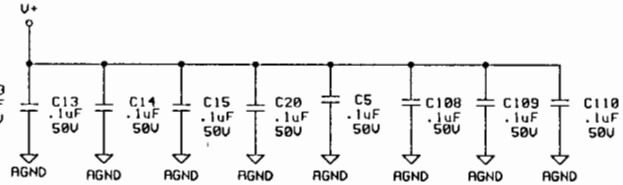

SIGNATURE		DATE
DRAWN	MILLE	11-2-94
DRFTG CHK		
DESIGN CHK		
C70FPA0.SCH		

AUDIOACCESS
26046 EDEN LANDING ROAD
HAYWARD, CA. 94545

CITATION 7.0
FRONT PANEL

DWG. NO.
REV. D0

SHEET 1 OF 4

RELEASED FOR MANUFACTURE

CITATION 7.0 FRONT PANEL 5-31-95 4:30 PM

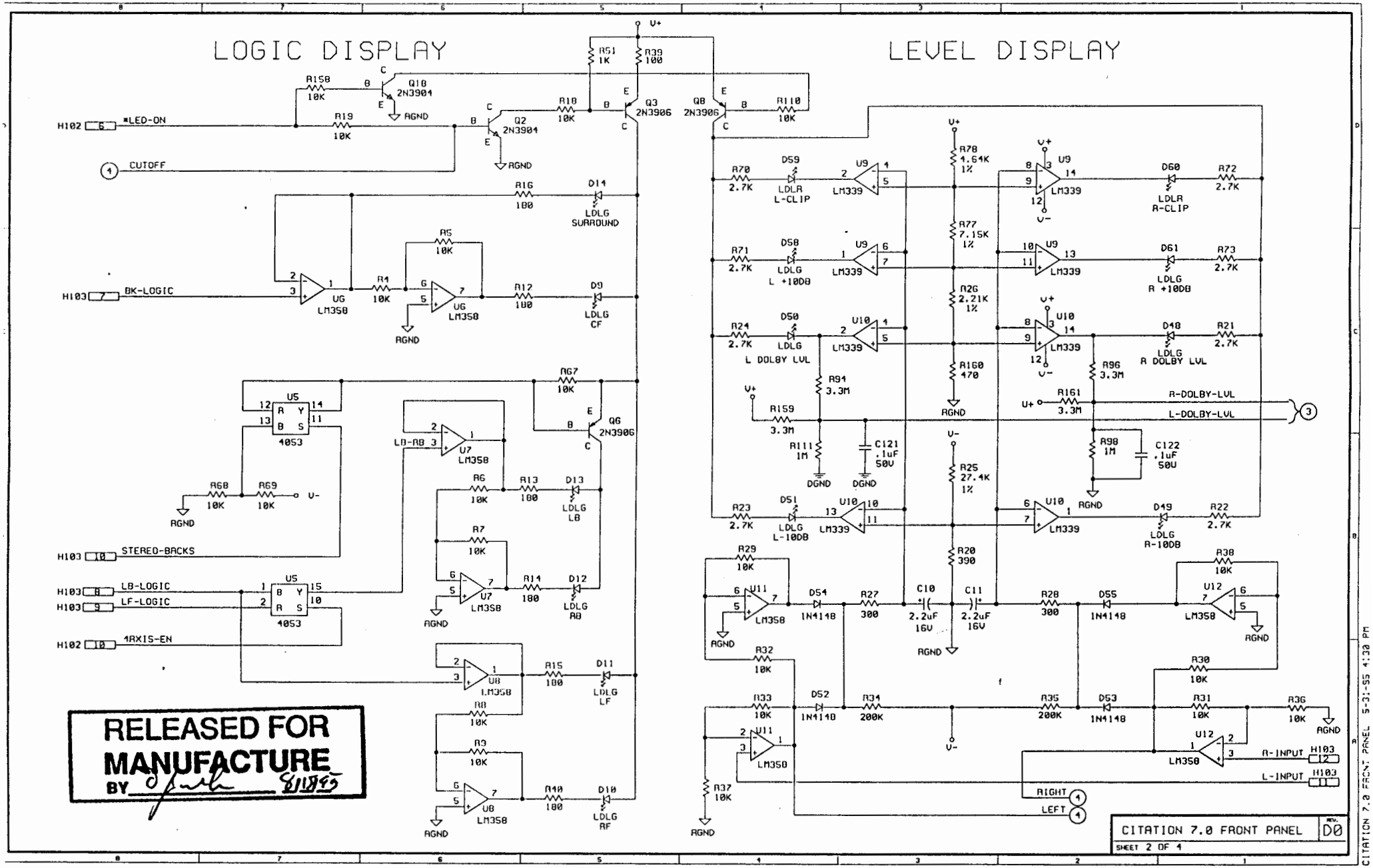
LOGIC DISPLAY
LEVEL DISPLAY
V+
R51 1K
R39 100
R158 10K
Q18 2N3904
AGND
H102 5 *LED-ON
R19 10K
Q2 2N3904
R18 10K
Q3 2N3906
Q8 2N3906
R110 10K
1 CUTOFF
R16 100
D14 LDLG SURROUND
R5 10K
H103 7 BK-LOGIC
R4 10K
UG LM358
R12 100
D9 LDLG CF
R67 10K
U5 4053
Q6 2N3906
LB-RB
U7 LM358
R68 10K
R69 10K
V-
R6 10K
R13 100
D13 LDLG LB
R7 10K
R14 100
D12 LDLG RB
H103 10 STEREO-BACKS
H103 8 LB-LOGIC
H103 9 LF-LOGIC
H102 10 4RXIS-EN
U8 LM358
R15 100
D11 LDLG LF
R8 10K
R9 10K
R40 100
D10 LDLG RF
R70 2.7K
D59 LDLR L-CLIP
U9 LM339
R71 2.7K
D58 LDLG L +10DB
R24 2.7K
D50 LDLG L DOLBY LVL
U10 LM339
R23 2.7K
D51 LDLG L-10DB
R78 4.64K 1%
R77 7.15K 1%
R26 2.21K 1%
R160 470
R94 3.3M
R159 3.3M
R111 1M
C121 .1uF 50V
DGND
R25 27.4K 1%
R20 390
D60 LDLR R-CLIP
R72 2.7K
D61 LDLG R +10DB
R73 2.7K
D48 LDLG R DOLBY LVL
R21 2.7K
R96 3.3M
R161 3.3M
R98 1M
C122 .1uF 50V
D49 LDLG R-10DB
R22 2.7K
R-DOLBY-LVL
L-DOLBY-LVL
R29 10K
U11 LM358
D54 1N4148
R27 300
C10 2.2uF 16V
C11 2.2uF 16V
R28 300
D55 1N4148
R38 10K
U12 LM358
R32 10K
R30 10K
R33 10K
D52 1N4148
R34 200K
R35 200K
D53 1N4148
R31 10K
R36 10K
R37 10K
R-INPUT H103 12
L-INPUT H103 11
RIGHT 4
LEFT 4
RELEASED FOR MANUFACTURE
BY 8/18/95
CITATION 7.0 FRONT PANEL
REV. D0
SHEET 2 OF 4
CITATION 7.0 FRONT PANEL 5-31-95 4:30 PM

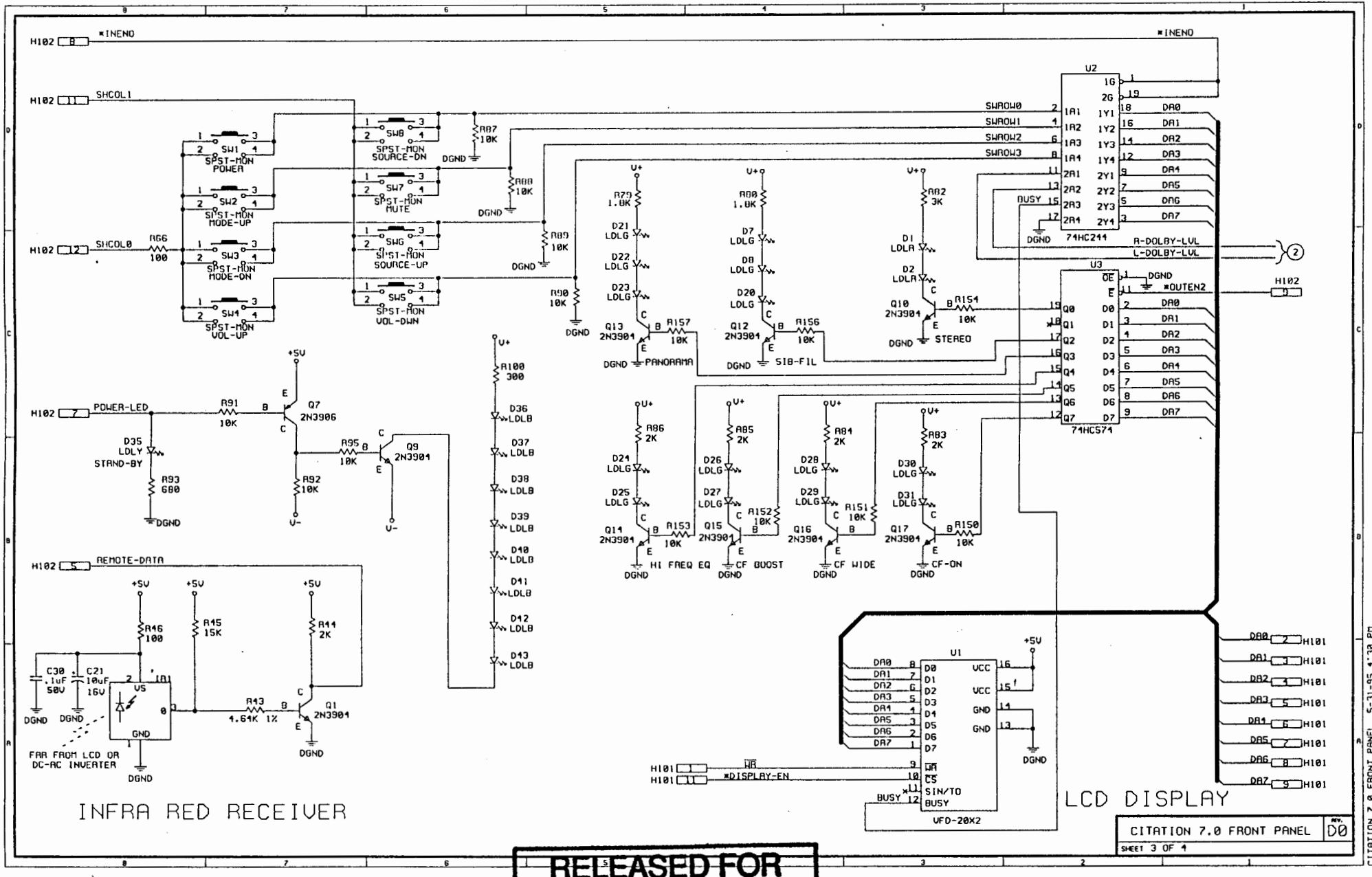

RELEASED FOR

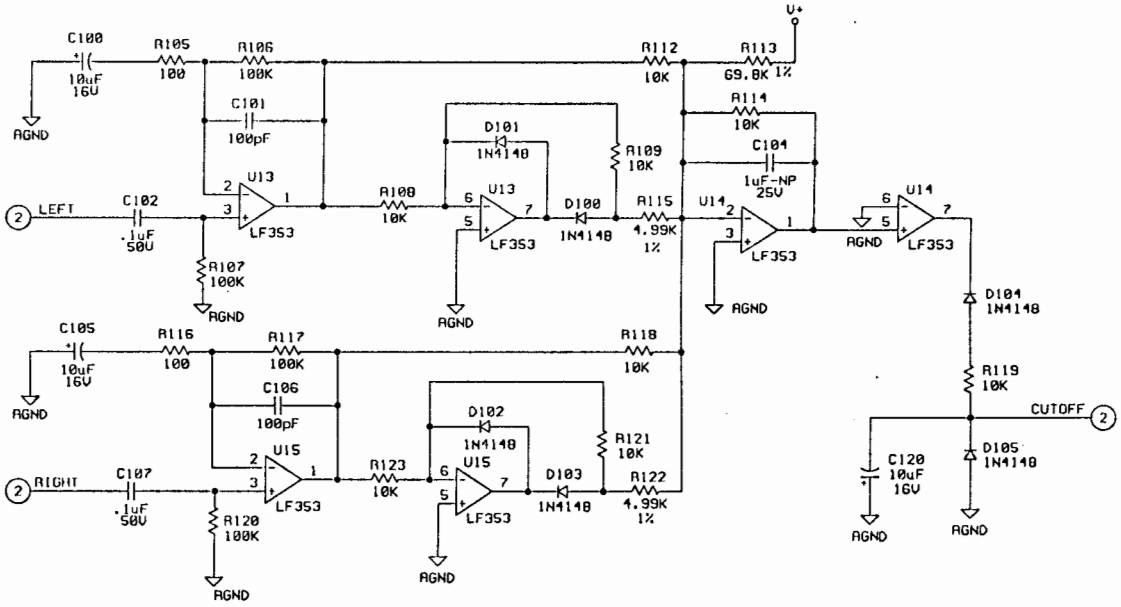

RELEASED FOR MANUFACTURE
BY Dey 1/2 8/15/95

CITATION 7.0 FRONT PANEL | REV. D0
SHEET 1 OF 1

CITATION 7.0 FRONT PANEL 5-31-95 4:30 PM