harman kardon

Model DVD 31

DVD/CD/CD-R/CD-RW/VCD MP3 Player

Preliminary Service Manual

- Contents -

SERVICE PRECAUTIONS……2
SPECIFICATIONS……5
FRONT PANEL CONTROLS……6
INFORMATION DISPLAY……7
REMOTE CONTROL……8
REAR PANEL CONNECTIONS……10
INSTALLATION/CONNECTIONS……11
CONNECTIONS/SETUP……14
BASIC TROUBLESHOOTING GUIDE……20
RESET INSTRUCTIONS……20
EXPLODED VIEW……21
EXPLODED VIEW PARTS LIST……22
BULLETIN # HK2004-003……23
MECHANICAL PARTS LIST……25
ELECTRICAL PARTS LIST……27
PCB DRAWINGS……36
SEMICONDUCTOR PINOUTS……49
BLOCK DIAGRAM……52
SYSTEM CONFIGURATION SPECS……53
SCHEMATICS……54
PACKAGE……67

harman/kardon, Inc.
250 Crossways Park Dr.
Woodbury, New York 11797

SERVICING PRECAUTIONS

NOTES REGARDING HANDLING OF THE PICK-UP

1. Notes for transport and storage

1) The pick-up should always be left in its conductive bag until immediately prior to use.
2) The pick-up should never be subjected to external pressure or impact.

Storage in conductive bag

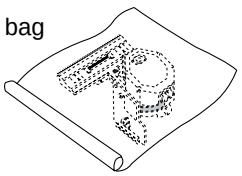

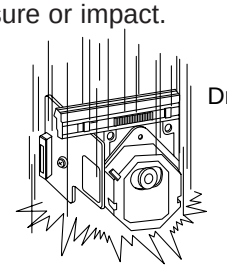

Drop impact

2. Repair notes

1) The pick-up incorporates a strong magnet, and so should never be brought close to magnetic materials.
2) The pick-up should always be handled correctly and carefully, taking care to avoid external pressure and impact. If it is subjected to strong pressure or impact, the result may be an operational malfunction and/or damage to the printed-circuit board.
3) Each and every pick-up is already individually adjusted to a high degree of precision, and for that reason the adjustment point and installation
screws should absolutely never be touched.
4) Laser beams may damage the eyes!
Absolutely never permit laser beams to enter the eyes!
Also NEVER switch ON the power to the laser output part (lens, etc.) of the pick-up if it is damaged.

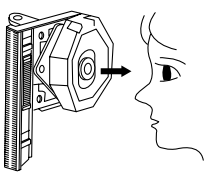

NEVER look directly at the laser beam, and don't let contact fingers or other exposed skin.

5) Cleaning the lens surface
If there is dust on the lens surface, the dust should be cleaned away by using an air bush (such as used for camera lens). The lens is held by a delicate spring. When cleaning the lens surface, therefore, a cotton swab should be used, taking care not to distort this.

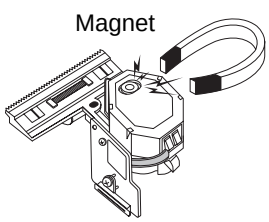

Magnet

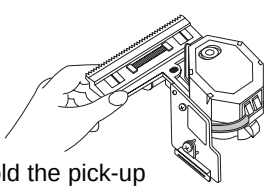

How to hold the pick-up

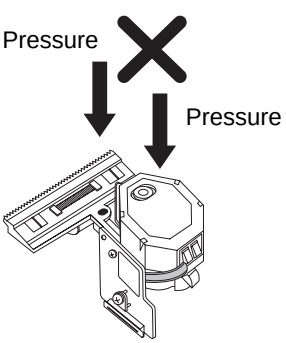

Pressure

Pressure

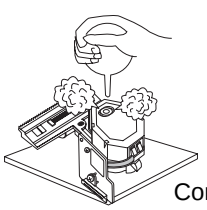

Conductive Sheet

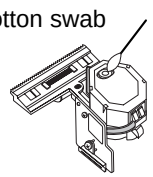

Cotton swab

6) Never attempt to disassemble the pick-up.
Spring by excess pressure. If the lens is extremely dirty, apply isopropyl alcohol to the cotton swab. (Do not use any other liquid cleaners, because they will damage the lens.) Take care not to use too much of this alcohol on the swab, and do not allow the alcohol to get inside the pick-up.

NOTES REGARDING COMPACT DISC PLAYER REPAIRS

1. Preparations

1) Compact disc players incorporate a great many ICs as well as the pick-up (laser diode). These components are sensitive to, and easily affected by, static electricity. If such static electricity is high voltage, components can be damaged, and for that reason components should be handled with care.
2) The pick-up is composed of many optical components and other high-precision components. Care must be taken, therefore, to avoid repair or storage where the temperature of humidity is high, where strong magnetism is present, or where there is excessive dust.

2. Notes for repair

1) Before replacing a component part, first disconnect the power supply lead wire from the unit
2) All equipment, measuring instruments and tools must be grounded.
3) The workbench should be covered with a conductive sheet and grounded.
   When removing the laser pick-up from its conductive bag, do not place the pick-up on the bag. (This is because there is the possibility of damage by static electricity.)
4) To prevent AC leakage, the metal part of the soldering iron should be grounded.
5) Workers should be grounded by an armband (1MΩ)
6) Care should be taken not to permit the laser pick-up to come in contact with clothing, in order to prevent static electricity changes in the clothing to escape from the armband.
7) The laser beam from the pick-up should NEVER be directly facing the eyes or bare skin.

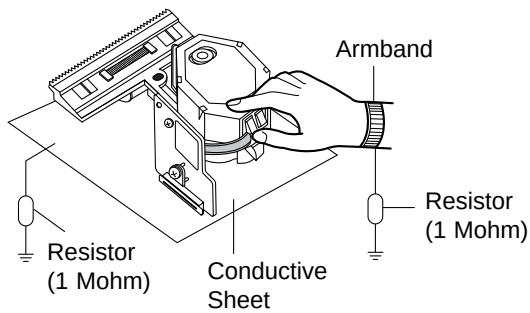

ESD PRECAUTIONS

Electrostatically Sensitive Devices (ESD)

Some semiconductor (solid state) devices can be damaged easily by static electricity. Such components commonly are called Electrostatically Sensitive Devices (ESD). Examples of typical ESD devices are integrated circuits and some field-effect transistors and semiconductor chip components. The following techniques should be used to help reduce the incidence of component damage caused by static electricity.

1. Immediately before handling any semiconductor component or semiconductor-equipped assembly, drain off any electrostatic charge on your body by touching a known earth ground. Alternatively, obtain and wear a commercially available discharging wrist strap device, which should be removed for potential shock reasons prior to applying power to the unit under test.
2. After removing an electrical assembly equipped with ESD devices, place the assembly on a conductive surface such as aluminum foil, to prevent electrostatic charge buildup or exposure of the assembly.
3. Use only a grounded-tip soldering iron to solder or unsolder ESD devices.
4. Use only an anti-static solder removal device. Some solder removal devices not classified as "anti-static" can generate electrical charges sufficient to damage ESD devices.
5. Do not use freon-propelled chemicals. These can generate electrical charges sufficient to damage ESD devices.
6. Do not remove a replacement ESD device from its protective package until immediately before you are ready to install it. (Most replacement ESD devices are packaged with leads electrically shorted together by conductive foam, aluminum foil or comparable conductive materials).
7. Immediately before removing the protective material from the leads of a replacement ESD device, touch the protective material to the chassis or circuit assembly into which the device will by installed.

CAUTION : BE SURE NO POWER IS APPLIED TO THE CHASSIS OR CIRCUIT, AND OBSERVE ALL OTHER SAFETY PRECAUTIONS.

8. Minimize bodily motions when handing unpackaged replacement ESD devices. (Otherwise harmless motion such as the brushing together of your clothes fabric or the lifting of your foot from a carpeted floor can generate static electricity sufficient to damage an ESD device).

DVD 31 TECHNICAL SPECIFICATIONS

Applicable Disc:	Disc formats: 5-inch (12cm) or 3-inch (8cm) DVD-Movie, or DVD-Audio Standard conforming DVD-R, DVD+R, DVD-RW, DVD+RW, VCD, CD, CD-R, MP3 or CD-RW discs Region code: DVD Movie disc with Code 1 or 0 only DVD-Layers: Single Side/Single Layer, Single Side/Dual Layer, Dual Side/Dual Layer Audio formats: Linear PCM, DVD-Audio, MPEG, Windows Media 9, Dolby Digital or DTS Audio Discs Still image format: JPEG	
Video Signal System:	NTSC	
Composite Video Output:	1V p-p/75 ohms, sync negative polarity	
S-Video Output:	Y/Luminance: 1V p-p/75 ohms, sync negative polarity C/Chrominance: 0.286V p-p	
Component Video Output:	Y: 1V p-p/75 ohms, sync negative polarity	
	Pr: 0.7V p-p/75 ohms	
	Pb: 0.7V p-p/75 ohms	
Analog Audio Output:	2V rms max	
Frequency Response:	DVD (Linear PCM):	2Hz – 22kHz +0/–0.5dB (48kHz sampling) 2Hz – 44kHz +0/–0.5dB (96kHz sampling)
	CD:	2Hz – 20kHz +0/–0.5dB
Signal/Noise Ratio (SNR):	105dB (A-weighted)	
Dynamic Range:	DVD: 100dB (18-bit)/105dB (20-bit) CD/DVD: 96dB (16-bit)	
THD/1kHz:	DVD/CD: 0.0025%	
Wow & Flutter:	Below Measurable Limits	
AC Power:	100–240VAC/50–60Hz	
Power Consumption:	2 Watts (On/Standby)/20 Watts (Max)	
Dimensions (W x H x D):	17-3/10" x 1-15/16" x 12" (440mm x 49mm x 330mm)	
Weight:	7.3 lb (3.3kg)	

Depth measurement includes knobs and connectors.

Height measurement includes feet and chassis.

All specifications subject to change without notice.

Harman Kardon and Power for the Digital Revolution are registered trademarks of Harman International Industries, Incorporated.

*Dolby is a registered trademark of Dolby Laboratories Licensing Corporation. Manufactured under license from Dolby Laboratories. “Dolby”, “Pro Logic” and the double-D symbol are registered trademarks of Dolby Laboratories. Confidential Unpublished Works. 1992-1997 Dolby Laboratories, Inc. All rights reserved.

“DTS” is a registered trademark of Digital Theater Systems, Inc.

Microsoft and Windows Media are registered trademarks of Microsoft Corporation in the United States and/or other countries.

This product incorporates copyright protection technology that is protected by method claims of certain U.S. patents and other intellectual property rights owned by Macrovision Corporation and other rights owners. Use of this copyright protection technology must be authorized by Macrovision Corporation and is intended for home and other limited viewing uses only unless otherwise authorized by Macrovision Corporation. Reverse engineering or disassembly is prohibited.

harman/kardon®

H A Harman International Company
250 Crossways Park Drive, Woodbury, New York 11797
www.harmankardon.com
© 2004 Harman International Industries, Incorporated
Part No. 312-AB310000-0010 6/04

FRONT-PANEL CONTROLS

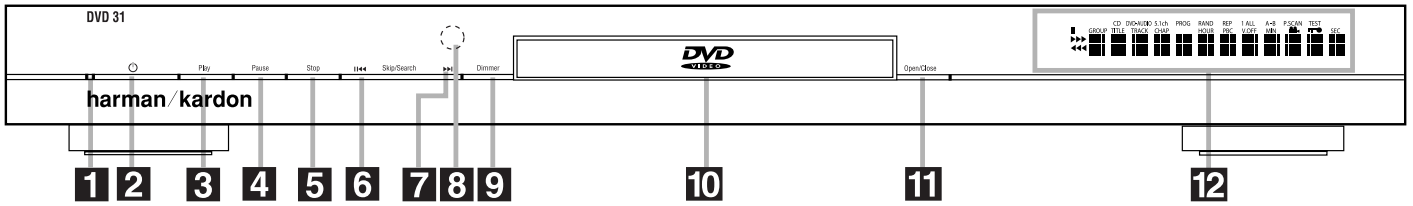

NOTE: To make it easier to follow the instructions that refer to the controls and connectors in this illustration, a larger copy may be downloaded from the Product Support section for this product at www.harmankardon.com.

1 Power Indicator
2 Power On/Off (Standby)
3 Play
4 Pause
5 Stop
6 Skip/Search Reverse
7 Skip/Search Forward
8 Remote Sensor
9 Display Dimmer
10 Disc Drawer
11 Open/Close
12 Information Display

1 Power Indicator: This indicator lights amber when the unit is connected to an AC power source, but is not turned on. When the unit is on, the indicator lights blue.

2 Power On/Off (Standby): Press the button once to turn the DVD 31 on. Press it again to put the unit in the Standby mode.

3 Play: Press to initiate playback or to resume playback after the **Pause Button 5 13** has been pressed.

4 Pause: Press this button to momentarily pause playback. To resume playback, press the button again. If a DVD is playing, action will freeze and a still picture will be displayed when the button is pressed.

5 Stop: Press this button once to place the disc in the Resume mode, which means that playback will stop, but as long as the tray is not opened or the disc changed, DVD playback will continue from the same point on the disc when the **Play Button 3 17** is pressed again. Resume will also work if the unit was turned off. To stop a disc and have play start from the beginning, press the button twice.

6 Skip/Search Reverse: Press this button once to return to the start of the current chapter for a DVD or track for a CD. Subsequent individual presses will skip backwards through the available chapters or tracks. Press and hold the button to play the disc in the fast reverse mode at the speed indicated in the on-screen display and by the **Playback Mode Indicators K**.

7 Skip/Search Forward: Press this button once to move to the start of the next chapter for a DVD or track for a CD. Subsequent presses will skip forward through the available chapters or tracks. Press and hold the button to play the disc in the Fast Play mode at the speed indicated in the on-screen display and by the **Playback Mode Indicators K**.

8 Remote Sensor: The sensor that receives commands from the remote control is behind the front panel in this area. To ensure proper operation of the player with the remote, it is important that this area not be covered. In the event that the player is enclosed in a cabinet or if the remote sensor is covered, you may extend the remote sensor by connecting an optional, external remote sensor to the **Remote Control Input 8** on the rear panel (see page 11). When optional, external IR "blasters" are used for system control, they should be positioned so that they point at this area.

9 Display Dimmer: Press this button to reduce the brightness of the Information Display by 50% or to turn the display off completely in the following order: FULL BRIGHTNESS ➔ HALF BRIGHTNESS ➔ OFF ➔ FULL BRIGHTNESS.

10 Disc Drawer: This drawer is used to hold the discs played in the unit. Be certain to seat all discs carefully within the recess in the drawer. Do not press down on the drawer when it is open, to avoid damage to the player.

11 Open/Close: Press this button to open or close the disc tray.

12 Information Display: The Information Display provides status information on the player and the disc being played through a series of specific indicators and messages that appear in the dot matrix display. See page 8 for more information on the display.

FRONT-PANEL INFORMATION DISPLAY

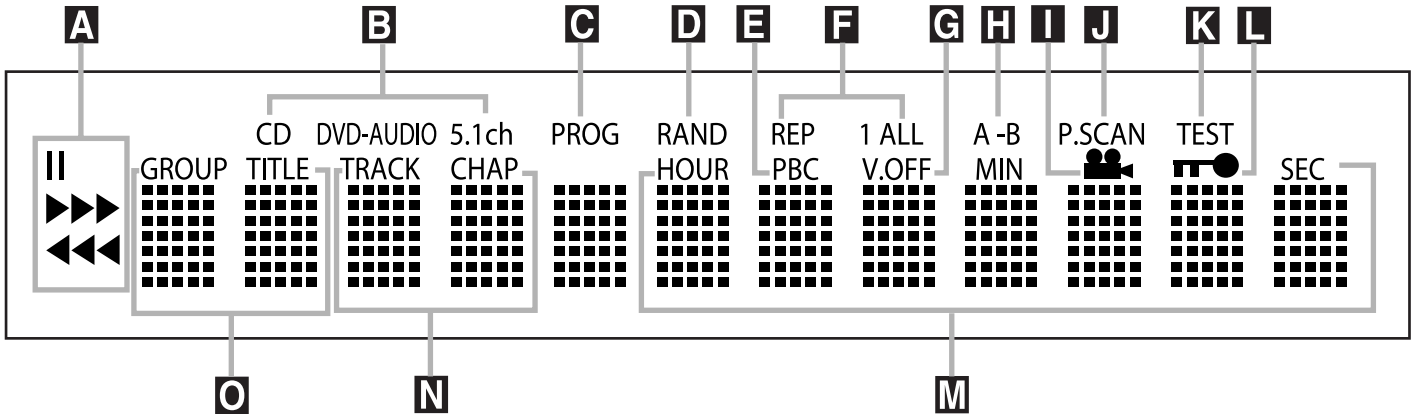

NOTE: To make it easier to follow the instructions that refer to the controls and connectors in this illustration, a larger copy may be downloaded from the Product Support section for this product at www.harmankardon.com.

A Playback Mode Indicators
B Disc Type Indicators
C Program Indicator
D Random Indicator
E VCD Playback Control Indicator
F Repeat Indicators
G V-OFF Indicator
H A-B Repeat Indicator
I Angle Indicator
J Progressive Scan Indicator
K Test Signal Indicator
L Parental Lock Indicator
M Time Indicators
N Chapter/Track Indicators
O Group/Title Indicators

A Playback-Mode Indicators: These indicators light to show the current playback mode:

▶ Lights when a disc is playing in the normal mode.

▶▶▶ When the DVD 31 is in the Fast Search play mode, two or three of these indicators will light to show that the unit is in a Fast Play mode, depending on the speed.

❙❙ Lights when the disc is paused.

◀◀ Lights when the disc is in the Fast Search Reverse mode.

B Disc Type Indicators: These indicators will light to show the type of disc or program material being played.

C Program Indicator: This indicator lights when the programming functions are in use.

D Random Indicator: This indicator lights when the unit is in the Random Play mode.

E VCD Playback Control Indicator: This indicator lights when the Playback Control function is turned on with VCDs.

F Repeat Indicators: These indicators light when any of the Repeat functions are in use.

G V-OFF Indicator: This indicator lights in red when the unit's video output has been turned off by pressing the V-OFF button on the remote control.

H A-B Repeat Indicator: This indicator lights when a specific passage for repeat playback has been selected.

I Angle Indicator: This indicator blinks when alternative viewing angles are available on the DVD currently playing.

J Progressive Scan Indicator: This indicator lights when the unit sends out a progressive scan signal.

K Test Signal Indicator: This indicator lights when the test pattern signal is in use.

L Parental Lock Indicator: This indicator lights when the parental-lock system is engaged in order to prevent anyone from changing the rating level without a code.

M Time Indicators: These positions in the indicator will show the running time of a DVD in play. When a CD is playing, these indicators will show the current track time, time remaining in the current track, or the total remaining time on the disc.

NOTE: The indicators **M N O** will also display text messages about the DVD's status, including `Reading` when a disc is loading, `Standby` when the unit is turned off, and `Disc Error` when a disc not compatible with the DVD is put into play.

N Chapter/Track Number Indicators: When a DVD disc is playing, these two positions in the display will show the current chapter. When a CD disc is playing they will show the current track number.

O Group/Title Indicators: When a DVD-Video disc is playing, these two positions show the current title. When a DVD-Audio disc is playing, they show the current group.

REMOTE CONTROL FUNCTIONS

1. Power On
2. Playlist
3. Audio Select
4. Open/Close
5. ▲/▼/◀/▶ Navigation Buttons
6. Info
7. Pause
8. Play
9. Previous Step/Skip
10. Search/Slow Reverse
11. Stop
12. Video Off
13. Display
14. Title
15. Clear
16. Numeric Keys
17. Light
18. A-B Repeat
19. Angle
20. Zoom
21. Picture –/+
22. Search/Slow Forward
23. Next Step/Skip
24. Status
25. Disc Menu
26. Enter
27. OSD
28. Subtitle
29. Power Off
30. Random
31. Repeat
32. IR Emitter

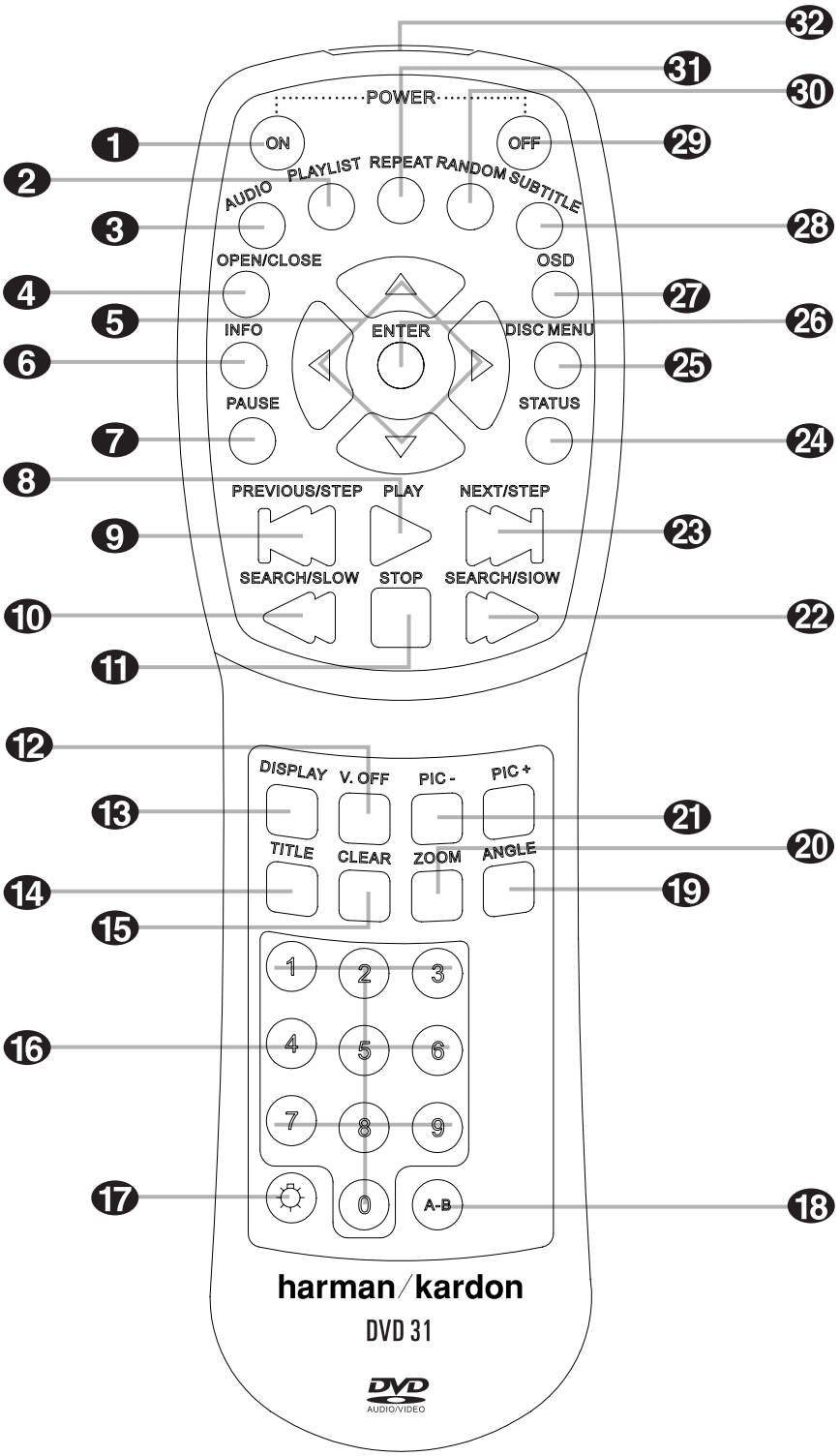

NOTE: To make it easier to follow the instructions that refer to the controls and connectors in this illustration, a larger copy may be downloaded from the Product Support section for this product at www.harmankardon.com.

REMOTE CONTROL FUNCTIONS

❶ **Power On:** Turns on the player when it is in Standby mode (Harman Kardon logo appears on-screen).

❷ **Playlist:** Press this button to change the order in which tracks are played on a CD or DVD-Audio disc or chapters are played on a DVD. (See page 28 for more information on creating and playing playlists.)

❸ **Audio Select:** Press to access various audio languages on a DVD. (If the DVD contains multiple audio streams.)

❹ **Open/Close:** Press to open/close the disc tray.

❺ ◀▶▲▼ **Navigation Buttons:** Use to move the cursor in the OSD.

❻ **Info:** Press once for detailed informations on the disc playing (Video/Audio Bit rate, Movie aspect ratio and others). Press again to remove information from screen.

❼ **Pause:** Press this button to pause the disc and freeze the picture during DVD or VCD playback, or to pause the playback of a CD. To play a DVD in the fast, slow or forward mode, first press this button and then press either the **Search/Slow Forward** ❷❷ or **Reverse** ❿ button.

❽ **Play:** Press this button to begin the playback of a disc, or to resume the playback when a disc has been paused.

❾ **Previous Step/Skip:** Press this button once to skip back to the beginning of the current chapter on a DVD or track on a CD. Press it again to continue to skip back through the remaining chapters or tracks. After first pressing the **Pause Button** ❼, press this button to step backwards through a DVD-Video disc as a series of still image frames. Press it again to continue to skip back through the remaining previous chapters.

❿ **Search/Slow Reverse:** This button initiates fast or slow play in the reverse mode. For fast reverse play, each press of the button when playing DVD discs changes the speed as indicated by the number of left-facing arrows appearing in the upper right corner of the screen and in the **Playback Mode Indicators** K. For slow reverse play of DVD-Video discs only, first press the **Pause Button** ❼ and the each subsequent press of this button will change the slow play speed as indicated by the number of left-facing arrows appearing in the upper right corner of the screen and in the **Playback Mode Indicators** K.

⓫ **Stop:** When a DVD is playing, press this button once to place the disc in the Resume mode, which means that playback will stop. However, as long as the disc drawer is not opened DVD playback will continue from the point where the disc was stopped when the **Play Button** ❽3 is pressed again. Pressing the button twice will stop the disc and play will start from the beginning of the disc when the **Play Button** ❽3 is pressed again. During CD playback press this button to stop playback.

⓬ **Video Off:** Press this button to turn off the video output for improved audio performance when playing CDs. Press it again to view the on-screen menus.

⓭ **Display:** Press to change the brightness of the **Information Display** 12 or to turn it off completely in the following order: FULL BRIGHTNESS ➜ HALF BRIGHTNESS ➜ OFF ➜ FULL BRIGHTNESS

⓮ **Title:** When a DVD is playing, press this button to go back to the main title menu for the disc being played.

⓯ **Clear:** Press this button to remove on-screen menus or banners from the display screen.

⓰ **Numeric Keys:** Press these buttons to enter a number.

⓱ **Light:** Press to illuminate remote controller.

⓲ **A-B Repeat:** Press this button to enter the starting point of a sequence on a disc you wish to repeat. The second press enters the end of the selection to be repeated. Once the "A" (start) and "B" (end) points have been entered the player will repeat the selection until the **Play Button** ❽3 is pressed or the disc is stopped.

⓳ **Angle:** Press this button to change the angle on discs programmed for multiple angle views.

⓴ **Zoom:** Press this button to zoom in on the image from a DVD, VCD or JPEG image. The image may be expanded by a factor of x2, x3, x4 or x5. Once the on-screen indication of the zoom ratio leaves the screen you may use the **Navigation Buttons** ❺ to move the picture across the screen.

㉑ **Picture –/+:** Press these buttons to move to the next (+) or previous (–) image when playing a disc with JPEG images.

㉒ **Search/Slow Forward:** This button initiates fast or slow play in the forward mode. For fast forward play, each press of the button when playing DVD discs changes the speed as indicated by the number of right-facing arrows appearing in the upper right corner of the screen and in the **Playback Mode Indicators** K. For slow forward play of DVD-Video discs only, first press the **Pause Button** ❼ and the each subsequent press of this button will change the slow play speed as indicated by the number of right-facing arrows appearing in the upper right corner of the screen and in the **Playback Mode Indicators** K.

㉓ **Next Step/Skip:** Press this button once to advance to the beginning of the next chapter on a DVD or track on a CD. Press it again to continue to advance through the available chapters or tracks. After first pressing the **Pause Button** ❼, press this button to step through a DVD as a series of still image frames.

㉔ **Status:** Press while a DVD-Video or DVD-Audio disc is playing to view banner display. Use the ◀/▶/▲/▼ **Navigation Buttons** ❺ to move through the different features in the Banner Display. When a symbol is highlighted, press **ENTER** ㉖ on the remote to select it.

㉕ **Disc Menu:** While a DVD-Video or DVD-Audio disc is playing, press this button to view the disc's main navigation menu.

㉖ **Enter:** Press this button to enter a setting to the player's menu or to confirm a menu selection choice on a disc's on-screen menu.

㉗ **OSD:** Press this button to use the on-screen menu system to adjust the player's configuration settings or to build a playlist.

㉘ **Subtitle:** When a DVD is playing, press to select a subtitle language or to turn subtitles off.

㉙ **Off:** Turns off the player to standby mode.

㉚ **Random:** Press this button to initiate the process of playing the tracks on a CD in random order.

㉛ **Repeat:** Press this button to view the Repeat Menu that allows you to change the playback mode to repeat a chapter or track or the entire disc.

㉜ **IR Emitter:** This small, clear button-like device sends the IR commands from the remote control to the DVD 31. To ensure proper performance of the remote control, be sure to point it toward the unit and do not cover it with your fingers when sending remote commands.

REAR-PANEL CONNECTIONS

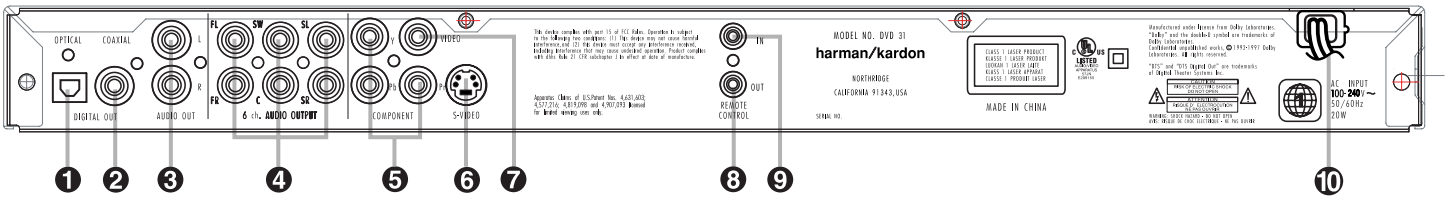

NOTE: To make it easier to follow the instructions that refer to the controls and connectors in this illustration, a larger copy may be downloaded from the Product Support section for this product at www.harmankardon.com.

❶ Optical Digital Output
❷ Coaxial Digital Output
❸ Analog Audio Outputs
❹ 5.1-Channel Audio Outputs
❺ Component Video Outputs
❻ S-Video Output
❼ Composite Video Output
❽ Remote Control Output
❾ Remote Control Input
❿ AC Power Cord

❶ **Optical Digital Output:** Connect this jack to the optical digital input of an A/V receiver or surround processor for Dolby Digital, DTS or PCM audio playback.

❷ **Coaxial Digital Output:** Connect this jack to the coaxial digital input of an A/V receiver or surround processor for Dolby Digital, DTS or PCM audio playback.

NOTE: The coaxial digital output should only be connected to a digital input. Even though it is the same RCA-type connector as standard analog audio connections, DO NOT connect it to a conventional analog input jack.

❸ **Analog Audio Outputs:** Connect these jacks to an audio input on an A/V receiver or surround processor for analog audio playback.

❹ **5.1-Channel Audio Outputs:** Connect these outputs to the matching 5.1-channel analog audio inputs on your receiver or surround sound processor. This connection is needed to listen to DVD-Audio discs.

❺ **Component Video Outputs:** These outputs carry the component video signals for connection to display monitors with component video inputs. For standard analog TVs or projectors with inputs marked Y/Pr/Pb or Y/Cr/Cb, connect these outputs to the corresponding inputs. If you have a high-definition television or projector that is compatible with high-scan-rate progressive video, connect these jacks to the HD component inputs. If you are using a progressive scan display device, PROGRESSIVE must be selected in the Video menu in order to take advantage of the progressive scan circuitry. See "Scan Type" section on page 20 for more information on progressive scan video.

IMPORTANT: These jacks should NOT be connected to standard composite video inputs.

❻ **S-Video Output:** Connect this jack to the S-video input on a television or video projector, or to an S-video input on an A/V receiver or processor if you are using that type of device for S-video input switching.

❼ **Composite Video Output:** Connect this jack to the video input on a television or video projector, or to a video input on an A/V receiver or processor if you are using that type of device for video input switching.

❽ **Remote Control Output:** Connect this jack to the infrared (IR) input jack of another compatible Harman Kardon remote-controlled product to have the built-in Remote Sensor on the DVD 31 provide IR signals to other compatible products.

❾ **Remote Control Input:** Connect the output of a remote infrared sensor, or the remote control output of another compatible Harman Kardon product, to this jack. This will enable the remote control to operate even when the front-panel Remote Sensor on the DVD 31 is blocked. This jack may also be used with compatible IR remote control-based automation systems.

❿ **AC Power Cord:** Connect this plug to an AC outlet. If the outlet is controlled by a switch, make certain that it is in the ON position.

NOTE: You'll find more details about all audio/video connections under Setup and Connections on the following pages.

SETUP AND CONNECTIONS

- Ensure that the power switch of this unit (and of other equipment to be connected) is set to "Off" before commencing connection.
- Do not block the ventilation holes of any of the equipment and arrange them so that air can circulate freely.
- Read through the instructions before connecting other equipment.
- Ensure that you observe the color-coding when connecting audio and video cables.

Connecting to a TV and Analog Receiver

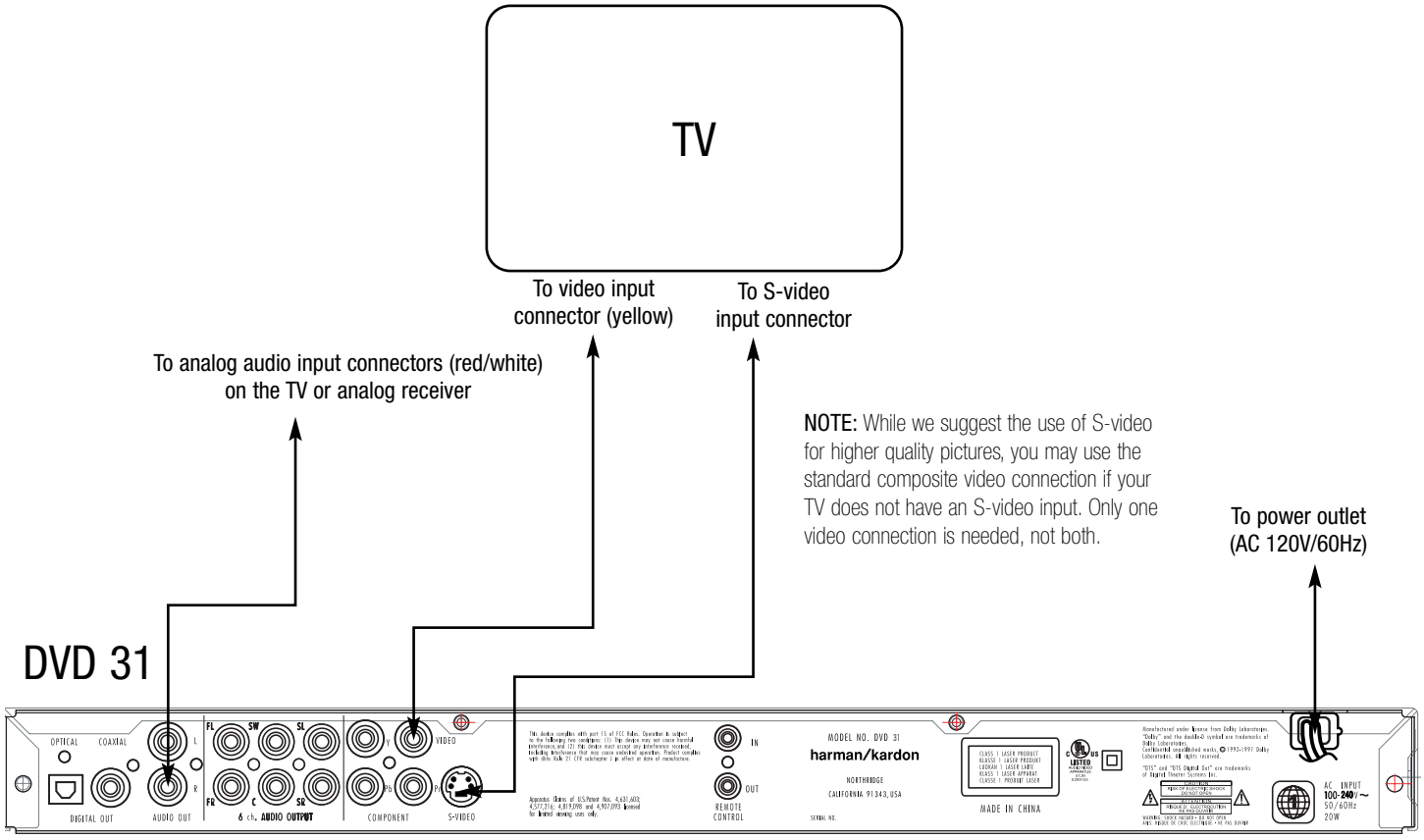

NOTES:

- The video output (yellow) combines the complete video signal (composite) and sends it to the TV (or to the A/V receiver) by one cable only. Use the video output when your TV set is equipped with a video input jack only.
- The S-video output connector separates the color (C) and luminance (Y) signals before transmitting them to the TV set in order to achieve a sharper picture. Use the S-video cable when connecting the player to a TV equipped with an S-video input for improved picture clarity. Never connect both outputs, video and S-video, to your TV or A/V receiver; use only one of them.
- When the audio signal is to be fed to an analog receiver rather than to the TV, connect the audio out jacks to any analog audio input on your amplifier/decoder/receiver. The DVD 31 will "downmix" Dolby Digital recordings to Pro Logic.* For more information see the IMPORTANT NOTE on next page.

Audio Connections

- One of the major advantages of the DVD format is its ability to use a variety of digital audio formats for the ultimate in sonic performance. However, in order to enjoy the benefits of digital audio, you must use a receiver or processor that has digital audio decoding capabilities and make an optical or coaxial digital audio connection between the DVD 31 and your home theater system. This simple connection is made as shown below with an optional coax or optical cable. Note that only one of these connections is required, and the choice is determined by personal preferences, as well as the number of inputs available on your receiver or processor as compared to the number of digital audio sources it must accommodate.
- In order to take advantage of the high-resolution DVD-Audio output of the DVD 31, you must connect the 5.1-channel direct outputs on the DVD 31 ❹ to the matching inputs on your receiver or processor. This includes both the left/center/right/surround left/surround right outputs and the subwoofer output. This is important, as the output of DVD-Audio discs is not available through the standard optical and coaxial digital audio output jacks.
- When your receiver or processor does not have digital audio capability, connect the left/right audio outputs (red/white colored jacks) to an available left/right audio input on your receiver or processor. You may also connect these outputs directly to the left/right audio inputs on a television or video display when an analog stereo or multichannel receiver is not used.
- Even when making a digital audio connection, we recommend that you also connect the left/right analog audio outputs of the DVD 31 to your receiver or processor. While your primary listening will be done using multichannel audio that is decoded from the digital audio input, some receivers and processors also require an analog connection for use with multizone systems or recording outputs. This optional connection is shown below.

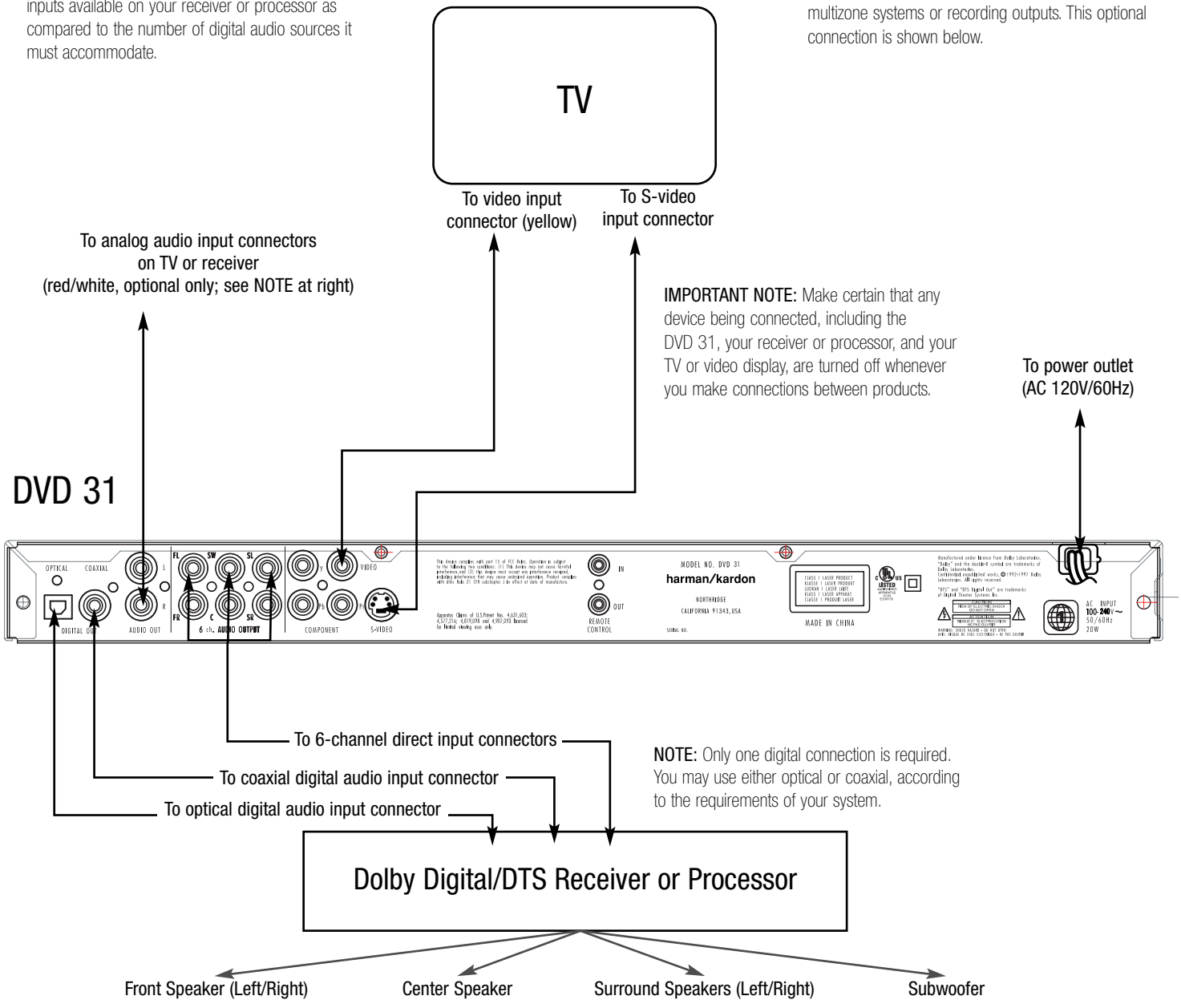

SETUP AND CONNECTIONS

Video Display Connections

- If your television, monitor, projector or video display has standard composite and S-video connections only, connect one or the other (but not both) either to the matching video inputs on your receiver or processor, or directly to the inputs on your television or other video display.
  - When both composite (yellow) and S-video jacks (but not component inputs) are available on the video display, we recommend using the S-video connection for higher video quality.
  - If your receiver or processor has video switching capability, we recommend that the composite or S-video outputs of the DVD 31 be connected to the receiver or processor, along with the output of other video sources in your system, such as a VCR and cable or satellite receiver. This simplifies the operation of your system since the receiver or processor will switch multiple sources and feed the selected output to the display.
- If your television, monitor, projector or video display has component video inputs, we strongly recommend that you connect the Y/Pr/Pb (green/red/blue) video output jacks on the DVD 31 to the matching video inputs on your receiver or processor, or directly to the inputs on your television or other video display.
  - If your receiver or processor has component video switching capability, we recommend that the video outputs of the DVD 31 be connected to the receiver or processor, along with the output of other component video sources in your system, such as an HDTV tuner or cable or satellite receiver. This simplifies the operation of your system since the receiver or processor will switch multiple sources and feed the selected output to the display.
  - If your video display is compatible with high-resolution video signals, be certain that the connections are made to the input jacks on the display marked "HD Component," if available.
  - If your video display is compatible with high-resolution video signals, you may need to configure the input settings on the display for use with "480P" input signals.
  - If you use the component video outputs with a video display that is compatible with high-resolution video signals, the DVD 31's video output should be changed from Interlaced to Progressive, as shown on page 20.
- When the component video outputs are used, we recommend that you also connect the standard composite or S-video outputs to your receiver or processor so that standard-rate video signals are available for use with the multizone or record outputs, where applicable.

IMPORTANT NOTE: Make certain that any device being connected, including the DVD 31, your receiver or processor, and your TV or video display, are turned off whenever you make connections between products.

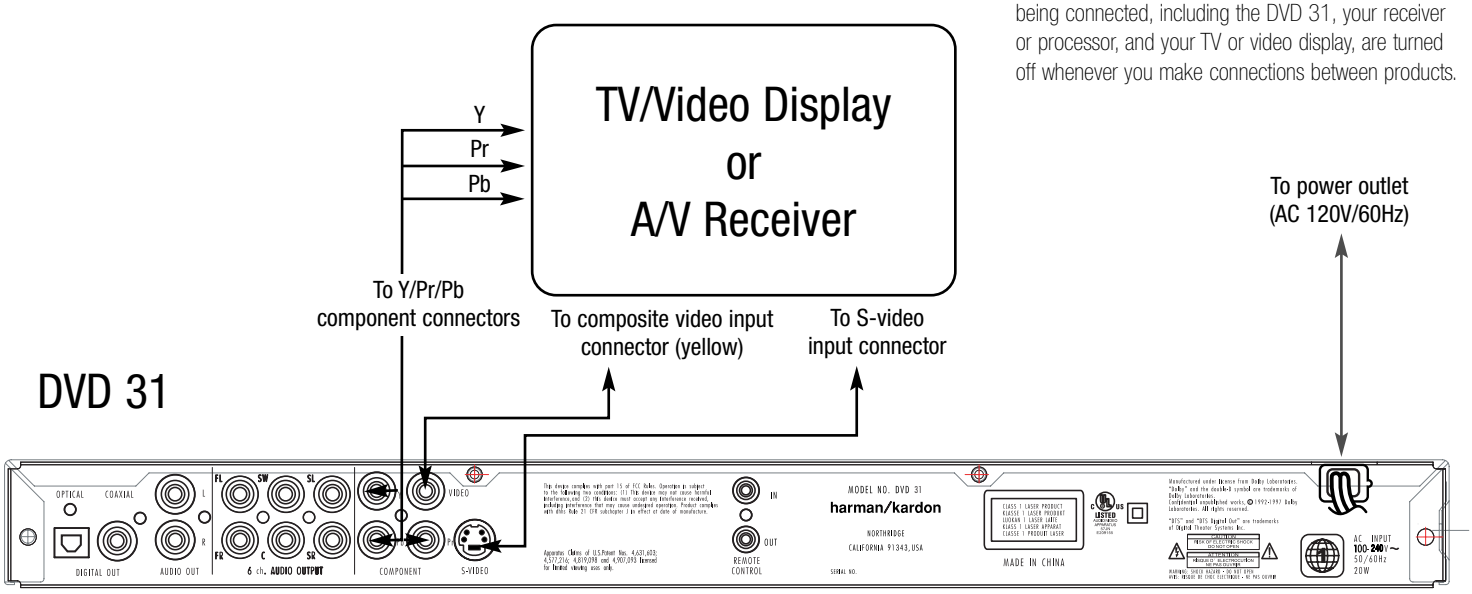

NOTES:

- If an S-video or composite video connection is made either as your primary video connection or in addition to a component video connection for use in feeding a multizone system or recorder, note that you may make either type of connection, but not both. Only one type is needed.
- When video connections are made to an A/V receiver, surround processor or other device that switches the video signals, make the connections between that device and your video display in accordance with the instructions for that product. Depending on the capabilities of the receiver, processor or other switcher, you may need to make both composite or S-video and component video connections.

DIGITAL AUDIO CONNECTIONS

Optical Digital Audio Connection Notes

- Remove the dust protection cap from the optical digital audio output and connect the cable firmly so that the configurations of both the cable and the connector match.
- Keep the dust protection cap and always reuse the cap when not using the connector.

Audio Output From the Unit's Optical/ Coaxial Digital Audio Output Connector

Disc:	Sound recording format:	Optical/coaxial digital audio output:
DVD	Dolby Digital	Dolby Digital bitstream (2-5.1ch) or PCM (2ch, 48kHz, 16-bit)‡‡
	Linear PCM (48/96kHz, 16/20/24-bit)	Linear PCM (2ch) (48/96kHz, 16/20/24-bit)
	DTS	Bitstream or no output‡‡
CD	Linear PCM	Linear PCM (44.1kHz sampling)

‡‡ Digital format must be selected as "Original" or "PCM" in Digital Output menu (see "Digital Output" section on page 19).

For Your Reference:

- Dolby Digital is a digital sound compression technique developed by the Dolby Laboratories Licensing Corporation. Supporting 5.1- or 7.1-channel surround sound depending on the specific disc, as well as stereo (2-channel) sound, this technique enables a large quantity of sound data to be efficiently recorded on a disc.
- DTS is another digital audio technology developed by Digital Theater Systems, Inc. It supports 5.1 and 6.1 surround sound, depending on the specific disc, thanks to a sophisticated encoding system.
- Linear PCM is a signal recording format used in CDs. While CDs are recorded in 44.1kHz/16-bit, DVDs are recorded in 48kHz/16-bit up to 96kHz/24-bit.
- If you have a Dolby Pro Logic Surround decoder connected to the DVD 31's analog audio out connectors, thanks to the "Downmix" function of the DVD 31 you will obtain the full benefit of Pro Logic from the same DVD movies that provide full 5.1-channel Dolby Digital soundtracks, as well as from titles encoded with Dolby Surround.
- The DVD 31 is designed to digitally output 96kHz PCM audio with a 96kHz sampling rate. However, some 96kHz DVDs may include copy protection codes that do not permit digital output. For full 96kHz fidelity from these discs, use the analog outputs of the DVD 31. If your surround processor converter does not support 96kHz PCM audio, you must use the DVD 31 analog outputs for full 96kHz fidelity with these discs.
- When connecting a receiver or surround processor with a digital input but which does not contain a Dolby Digital or DTS decoder, be sure to select PCM as the initial setting in the Digital Output menu (see page 19). Otherwise, any attempt to play DVDs may cause such a high level of noise that it may be harmful to your ears and damage your speakers.
- CDs can be played as they would in a conventional CD player.

Dolby Digital and DTS

Both Dolby Digital and DTS are audio formats used to record 5.1-channel audio signals onto the digital track of film. Both of these formats provide six separate channels: left, right, center, left rear, right rear, and common subwoofer.

Remember that Dolby Digital or DTS will only play 5.1-channel sound if the optical or coaxial output of the DVD 31 is connected to a DTS or Dolby Digital receiver or decoder (see page 13) and if the disc was recorded in the Dolby Digital or DTS format.

NOTE: Some first-generation DTS decoders that do not support DVD-DTS interface may not work properly with the DVD/CD player.

DVD-Audio

The high-resolution output of DVD-Audio discs is only available as an analog signal, due to a combination of technical limitations on current digital output devices and various copy protection requirements. For that reason, it is necessary to make direct analog connections between the **5.1-Channel Direct Outputs ❹** on the DVD 31 and the matching 5.1 direct inputs on your A/V receiver or surround processor.

System Setup

The final step in the installation of the DVD 31 is to establish the system's configuration. Before proceeding further to make any adjustments, make certain that the DVD 31 is properly connected to a video display and an AC power source. Turn on the DVD 31 by pressing the **Power On/Off Switch 2** and note that the **Power Indicator 1** will change from amber to blue. You do not need to play a CD or DVD in the unit to make any system setup adjustments.

In many cases, you will be able to accept the default settings, which will greatly simplify the initial process. Of course, these settings may be changed at any time to reflect changes to the other equipment in your home theater system or to adjust the DVD 31's output or operation to your needs and preferences.

Menus and Navigation

Changes to the player's configuration or the creation and use of programmed playlists is made using the OSD menu system. While there are different menus and sub-menus for specific functions, they share a common layout and navigation scheme. Each menu screen is divided into six areas, as shown below:

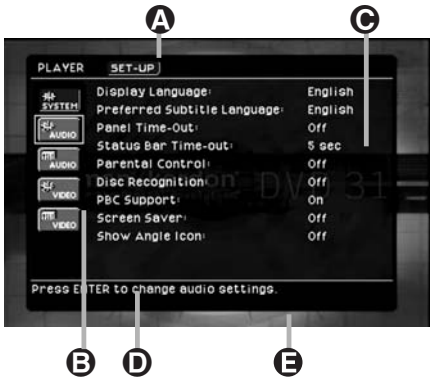

A: The Main Menu line is at the top left corner of the screen and it allows you to select either the Player or Setup menus. Use the ◀/▶ **Navigation Buttons 5** to highlight either PLAYER or SETUP in light blue, and then press the **Enter Button 26** to activate the selected menus.

- The PLAYER menus contain items that create and control programmed playback and playlist creation, as well as providing information about the disc being played.
- The SETUP menus are used to establish the specific configuration settings for all aspects of the player's operation, including video, audio, system and parental control, which are made through a series of four setup menus, all of which share a common navigation method. To use any of the setup menus, press the **OSD Button 27** and note that the Player Info screen will appear. Press the ▶ **Navigation Button 5** so that the on-screen menu changes to the SYSTEM SETTINGS menu.

B: The submenus listed in a vertical column at the left side of the screen access the specific groups of settings or controls. After selecting either of the two main menu screens as shown above, press the ◀ **Navigation Button 5** once. A white box outline will surround the submenu that is at the top of the list. Press the ▲/▼ **Navigation Buttons 5** to select one of the available choices.

On the Player Main Menu the Available Submenus Are:

- The INFO menu, which is identified by an "i" icon, which provides information about the disc's contents and the controls used to initiate programmed play.
- The PROGRAM menu, as identified by an icon showing three stacked books, which shows the available tracks for a CD, or titles and chapters for a DVD, and the order in which they have been programmed for play.
- The DISC INFO menu (for DVD discs only), as identified by a disc icon, provides detailed information about the video and audio content on the disc being played.
- The AUDIO menu (for discs with MP3 or WMA files only), as identified by a musical note icon, contains the settings used to program playback of MP3 and Windows Media Audio files.
- The PICTURE menu (for discs with JPEG files only), as identified by a camera icon, contains the settings used to program playback of JPEG still image files.
- When the number of tracks or titles on a disc is greater than the space available on the screen to display them, ▲/▼ indicators will appear at the bottom left side of the menu. To use these on-screen buttons to scroll through a program list, press the ▲/▼ **Navigation Buttons 5** to highlight either icon with a white outline box and press the **Enter Button 26**.

On the Setup Main Menu the Available Submenus Are:

- The SYSTEM setup menu, which is identified by a gear icon and the word SYSTEM, which establishes the general settings for the player.
- The AUDIO setup menu, as identified by a gear icon and the word AUDIO, which establishes the settings for the player's audio output.
- The AUDIO adjustments menu, as identified by an icon with a set of slider controls and the word AUDIO, which changes the settings for the audio output at the **5.1-Channel Direct Outputs 4** that are used when a DVD-Audio disc is playing. These settings include bass management/speaker size, delay time and output level adjustment.
- The VIDEO setup menu, as identified by a gear icon and the word VIDEO, which establishes the video formatting and configuration settings.
- The VIDEO adjustments menu, as identified by an icon with a set of slider controls and the word VIDEO, which changes the settings for the video output either with or without a color bars test signal.

C Control Settings: The main area of the menu screens shows a list of the control settings available for the current menu. On the left side of the main blue tinted area is a listing of the settings available on that menu. To the right of each line is the current setting. To select a specific setting, press the ▲/▼ **Navigation Buttons 5** until the setting for the desired item is highlighted in a light blue box. Next, press the **Enter Button 26** and use the ▲/▼ **Navigation Buttons 5** to select one of the options shown on the **Adjustment Options Line E**, or enter the appropriate information with the **Numeric Keys 16**, depending on the option being adjusted.

D Command Description: The top message line in the dark blue bar at the bottom of the screen describes the function or setting that is being adjusted.

E Adjustment Options: The bottom line in the dark blue bar at the bottom of the screen displays the settings available for the **Control Setting C** under adjustment. To make a selection, use the ▲/▼ **Navigation Buttons 5** to select one of the options shown on the **Adjustment Options Line E**, or enter the appropriate information with the **Numeric Keys 16**, depending on the option being adjusted.

Within a given menu, adjustments are made using the following steps and commands on the remote control:

- Press the ▲/▼ **Navigation Buttons 5** to select an item to be adjusted.
- When the current setting for the item to be adjusted is highlighted, press the **Enter Button 26**.
- Press the ▲/▼ **Navigation Buttons 5** to select one of the options shown on the **Adjustment Options E** line. In cases where a series of underscore lines (_ _ _ _) is shown, enter the desired setting using the **Numeric Keys 16**.
- When the desired setting is highlighted or the numeric entry made, press the **Enter Button 26**.
- Press the ▲/▼ **Navigation Buttons 5** to select another item for adjustment, if required.
- When all required adjustments on this menu have been made, press the ▲/▼ **Navigation Buttons 5** to move to the **Submenu Selection Area B** and then press the ▲/▼ **Navigation Buttons 5** to select another Submenu.

SYSTEM SETUP

• If all adjustments are complete, press the **OSD Button** 27 to exit the menu system.

Most DVDs are created to allow setup menus to be displayed while the disc is playing, superimposed over the video playback. However, some discs are authored in a way that does not allow this. If you see the ⃠ icon displayed on the screen after pressing the **OSD Button** 27, press the **Stop Button** 11 and then press the **OSD Button** 27 again.

The method of navigation, option selection and adjustment described below applies to all menus except for the Video Adjustments, which use a different control method due to the need for viewing the on-screen video or the DVD 31's internal test signal while the settings are being made. See page 21 for more information on changing the Video Adjustments.

Setup Menu

The five submenus within the SETUP menu are where you establish the basic system settings for the DVD 31. Most of these settings need to be adjusted only once, and in many cases you will find that the system defaults are the correct option for your combination of DVD player, A/V receiver or surround processor and video display. However, it is worth a few minutes to briefly scan through each of the Submenus to confirm that the settings are correct and to familiarize yourself with the available options so that you are aware of the flexibility of the DVD 31.

To access the SETUP menus, press the **OSD Button** 27 to activate the main menu screen, and then press the ▲/▼ **Navigation Buttons** 5 so that SETUP is highlighted and then use the ▲/▼/◀/▶ **Navigation Buttons** 5 until the desired **Sub-Menu** B is highlighted within a white outline box and press **Enter** 26.

System Setup Menu

The SYSTEM SETUP submenu is where you establish the control options for the DVD 31 that do not relate to audio or video playback. In most cases, the system default options are sufficient for normal operation, but you may wish to change them to tailor the unit's operation to your preferences.

The following adjustments may be made on the SYSTEM SETUP menu.

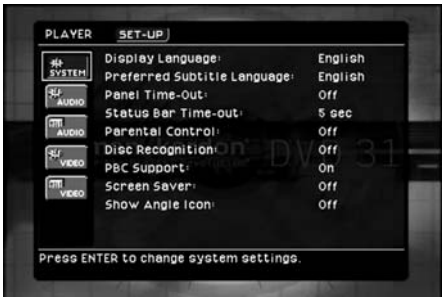

Display Language: This setting selects the language that will be used for the DVD 31's OSD menus and other system messages. The default is English, but you may also select French, Spanish, German or Italian.

Preferred Subtitle Language: This setting selects the language used for the display of subtitles. The default setting is OFF, which plays discs without subtitles. To set the player so that subtitles will always play in a specific language when they are available, select from any of the choices shown on the **Adjustment Options Line** E when adjusting this item, as shown above. If you do not find your preferred language in the list of options, you may select a preferred language by first pressing the ◀/▶ **Navigation Buttons** 5 during the setting adjustment so that OTHER is highlighted. Press the **Enter Button** 26 and then use the **Numeric Keys** 16 to enter the four-digit code listed on page 30 for the desired language. This selects a preferred subtitle language, but it will only be available when the disc being played contains that language. The list of subtitles available on any given disc is always shown on the disc jacket, usually at the bottom of the back cover. Note that the subtitles may also be switched on or off, or a new language selected during playback using the **Subtitle Button** 28, as described on page 25.

Panel Time-Out: This settings selects the time-out interval for the front-panel **Information Display** 12. The default setting is OFF, which disables this feature so that the front-panel indicators are always illuminated. You may also choose five to 20 seconds as the length of time after you press any button on the front panel or remote for the display to go out. To view the displays when they are off, press any button on the remote.

Status Bar Time-Out: This setting selects the time-out interval for the on-screen Status Bar that appears at the top of your video screen when the **Status Button** 24 is pressed while a disc is playing. During DVD playback, the status bar shows the current title and chapter, as well as the elapsed or remaining time in the current title. You may program the status bar to remain on-screen for either five or 20 seconds after the **Status Button** 24 is pressed. When OFF is selected, the time-out is disabled, and the status bar will remain on the screen until the **Status Button** 24 or **Clear Button** 15 is pressed.

Parental Control: This setting enables you to restrict viewing to films or other discs encoded with parental control information to a specific level or below, and it also enables you to change the password that must be entered to change the settings for this option. The default setting allows all discs to be played, but you may change the setting so that viewing is controlled within the eight steps, with lower numbers being more restrictive and high numbers allowing more material to be viewed. The steps correspond to the standard MPAA ratings symbols as follows. Additional information about movie ratings is available online at www.mpaa.org/movieratings.

- Step 1 is equivalent to a "G" rating for general audiences with material appropriate for all viewers.
- Step 2 is an intermediate level between "G" and "PG" rated material.
- Step 3 is equivalent to a "PG" rating.
- Step 4 is equivalent to a "PG-13" rating.
- Step 5 is an intermediate level between "PG-13" and "R" rated material.
- Step 6 is equivalent to an "R" rating.
- Step 7 is equivalent to an "NC17" rating.
- Step 8 allows all discs to be played, regardless of their content rating.

To access the Parental Control settings, press the ▲/▼ **Navigation Buttons** 5 until the current setting on the **Parental Control Settings** C line is highlighted and press the **Enter Button** 26. Next, enter the default password by pressing "8888" using the **Numeric Buttons** 16. Finally, use the ◀/▶ **Navigation Buttons** 5 to highlight the desired parental control level as shown on the **Adjustment Options** E line as described above. You may also change the password by highlighting NEW PASSWORD, pressing **Enter Button** 26 and by following the instructions that appear in the **Command Descriptions** D line.

Disc Recognition: This setting controls the Disc Recognition feature. When turned on, it allows you to pause a DVD-Video disc, remove it from the player, play another disc, and then resume the playback of the original disc at a later time from the point at which you paused. When a previously played disc is re-inserted in the DVD 31, you will be presented with an on-screen status message asking whether you wish to start playback from the beginning of the disc or resume at the point where you left off. Note that even when the setting is activated, you must *pause* the playback, rather than bring it to a full stop, and the unit must not be turned off between discs.

PBC Support: This setting controls the activation of PBC (Play Back Control) Support for VCD discs. If you plan to play VCD discs, which are a CD-ROM-based format that predates DVD, we recommend that the setting be turned ON.

Screen Saver: This setting controls the activation of a screen saver that prevents the image of the "splash screen" from being "burned" into the face of your video display when a disc is stopped for more than five minutes. If you use the DVD 31 with a plasma display, direct-view CRT set or a CRT-based projector, we strongly recommend that the setting be turned ON.

Show Angle Icon: This setting controls the activation of the Angle Icon. When this setting is turned ON, the Angle Icon, which is a small image of a movie camera, will appear in the upper right corner of the screen when multiple-angle material is available on the disc being played. When the icon appears, press the **Angle Button** ⑲ on the remote to switch between the available views or program material.

Audio Setup Menu

This menu establishes the DVD's configuration for general audio settings, such as preferred language and digital audio settings.

As with all setup menus, press the **OSD Button** ㉗ to activate the main menu screen, and then press the ◀/▶ **Navigation Buttons** ❺ so that SETUP is highlighted. Press **Enter Button** ㉖, and then use the ▲/▼/◀/▶ **Navigation Buttons** ❺ until the AUDIO SETUP menu is highlighted within a white outline and press the **Enter Button** ㉖ again. Finally, press the ▲/▼/◀/▶ **Navigation Buttons** ❺ once more to move the highlight to the **Control Settings** Ⓒ side of the menu screen.

The following adjustments are available on the AUDIO SETUP menu:

Preferred Audio Language: This setting is used to select the default language that will be used for program playback. The factory default setting is English, but you may choose French, Spanish, German or Italian by making a selection on the **Adjustment Options** Ⓔ line. To select a language other than those shown, select OTHER from the choices on the **Adjustment Options** Ⓔ line and press the **Enter Button** ㉖. Then, use the **Numeric Keys** ⑯ to enter the four-digit code listed on page 30 for the desired language. This selects a preferred audio program language, but it will only be available when the disc being played contains that language. The list of languages available on any given disc is always shown on the disc jacket, usually at the bottom of the back cover. Note that the audio playback language may also be changed at any time during playback using the **Audio Button** ❸, as described on page 24, but any changes made will only be effective during playback of that disc.

Digital Output: This setting selects the digital audio data stream that is routed to the **Optical Digital Output** ❶ or the **Coaxial Digital Output** ❷. Two choices are available:

- ORIGINAL, which is the default setting, sends the Dolby Digital or DTS soundtrack, as selected from the disc's menu or by using the **Audio Button** ❸, as explained on page 25. This setting should be used when your receiver or processor is capable of decoding signals in the Dolby Digital or DTS format.
- PCM, which outputs a standard PCM signal for decoding by standard digital-to-audio converters that are not compatible with Dolby Digital or DTS data streams.

PCM Limit: This setting selects the maximum sample rate for the digital audio output of the DVD 31. Before making a selection for this option, consult the owner's manual for your receiver or processor to determine the maximum sampling rate your receiver or processor is capable of handling. Three choices are available:

- If your receiver is not capable of resolving digital signals greater than 48kHz, or if you are uncertain of your equipment's capabilities, select the 48kHz option. The DVD 31 will down-sample any program material with higher sample rates so that it is compatible with your equipment.
- If your receiver or processor is capable of handling digital signals up to 96kHz, select that option. The DVD 31 will down-sample any program material with higher sample rates so that it is compatible with your equipment.
- If your receiver or processor is capable of handling digital signals up to 192kHz, select the No Limit option. In this case all signals will be passed through at their native rates without down-sampling.

If you are unsure of the capabilities of your receiver or processor, we suggest that you start with the 96kHz option. If you select this setting and do not hear any audio when a high-resolution disc is played, change the setting to 48kHz so that the audio will be properly downsampled.

Dynamic Range: This setting allows you to take advantage of the programming present on some Dolby Digital recordings to reduce the volume of louder, peak passages while maintaining intelligibility of quieter passages. This means that you may listen to programs at a level that allows the full impact of a soundtrack to be heard at a volume that is lower than you might otherwise use to avoid complaints about loud volume levels. The DVD 31 accomplishes this by compressing the audio to a greater or lesser degree, depending on which setting you choose. Three options are available:

- MINIMUM does not make any changes to the original playback, and should be used when the volume setting in the listening room may be as loud as you desire.
- MEDIUM applies a moderate amount of compression so that louder passages are a little bit quieter.
- MAXIMUM applies more compression so that louder passages are much softer.

Feel free to experiment with the settings at any time. Note that if your receiver or processor also allows you to program the dynamic range setting, also known as the "Night Mode," you do not need to make any adjustments on the DVD 31 and should leave the setting at MINIMUM.

Audio Adjustments: This setting activates the AUDIO ADJUSTMENTS menu's options. If your DVD 31 is connected to a receiver or processor that does NOT have the capability to adjust bass management/speaker size, output levels and delay times on its "direct" inputs, the proper setting here is On. However, if your receiver or processor does allow adjustment for these settings, we recommend that you make them there and select Bypass on this submenu.

Delay Unit: This setting selects the measurement system used in entering delay times when the AUDIO ADJUSTMENTS menu is activated. Distance entry in feet is the default, but you may alternatively choose to enter the distances in meters.

Audio Adjustments Menu

This menu allows you to adjust the settings that control the audio output on the **5.1-Channel Audio Outputs** ❹ for bass management (speaker size), output level and delay times. The proper adjustment of these settings is key to optimal reproduction of DVD-Audio discs, particularly when the DVD 31 is used with a receiver or processor that does not have audio adjustment capabilities for the direct inputs.

Important Note: In order to avoid audio problems, when the DVD 31 is connected to a receiver or processor that DOES have the capability to adjust audio and bass management parameters internally for direct inputs, you may use that capability or adjust the settings in the DVD 31. As noted above, the preferred method of operation is to use the receiver for these adjustments. In that case, remember to set the AUDIO ADJUSTMENTS setting in the AUDIO SETUP menu to BYPASS. If you make the adjustments using the DVD 31's settings, it is important that the receiver's settings for the "direct" inputs be disabled or set to "Large" for the speakers and "0" for the level adjustments and delay times, provided that these settings are separate for the "Direct" inputs from the rest of the receiver's operation. If you have any questions about the capabilities of your receiver or processor, we recommend that you consult its owner's manual or the manufacturer's Web site for further information.

SYSTEM SETUP

Before proceeding with the audio setup adjustments using the DVD 31's controls, we recommend that you first use the menu system in your receiver and processor to access the settings already established for "Speaker Size," "Output Level" and "Delay Time." Write these settings down, as you will use them during the configuration process.

As with all setup menus, press the **OSD Button** ㉗ to activate the main menu screen, and then press ▲/▼ **Navigation** ❺ so that `SETUP` is highlighted. Then use the ▲/▼/◀/▶ **Navigation Buttons** ❺ until the `AUDIO ADJUSTMENTS` **Submenu** Ⓑ is highlighted within a white outline box and press **Enter** ㉖.

The following adjustments are available on the `AUDIO ADJUSTMENTS` menu for each speaker position. Although some of the adjustments work in speaker pairs, it is recommended that you cycle through the adjustments for each speaker position using the ▲/▼/◀/▶ **Navigation Buttons** ❺ to enter the settings that are appropriate for your system.

Speaker Size: Speaker size is part of the bass management system which determines which frequencies are sent to the specific speaker position, and which are sent to the subwoofer. The designation of "size" does not refer to the speaker's physical size, but rather to the lowest frequency a speaker can handle. For this purpose, "full-range" speakers are considered "large," while those not capable of reproduction below 100Hz are considered "small." In general, if you are using a packaged speaker system with smaller satellite-type speakers and a subwoofer, you should select `Small`. `Large` should only be selected if you are certain that your speakers are capable of handling extreme low-frequency sounds.

Note that the speaker size for the Front Left and Front Right, and Surround Left and Surround Right positions are adjusted as pairs. When you change the setting for the left speaker in either the front or surround positions, the right speaker changes to that setting, and vice versa.

For the subwoofer, the settings are slightly different. Select `On` when a subwoofer is connected, or `Off` if one is not used. The second setting for the subwoofer is the crossover. This determines which sounds will be sent to the subwoofer, and which to the main speakers when `Small` is selected as the speaker size for any of the speakers. Select the frequency from those shown on the **Adjustments Options Line** Ⓔ that is closest to the lowest frequency your main (left/center/right/surround left/surround right) speakers are able to reproduce. If you are not familiar with that information, it may be found in the owner's manual for your speakers.

Delay Time: This setting is used to compensate for the time it takes for sound to reach you from each speaker position. Select the distance from the speaker to your listening position by choosing one of the distance settings shown on the **Adjustments Options Line** Ⓔ. This setting is not available for the subwoofer.

Output Level: This setting is used to maintain balanced reproduction and sound field presentation. The goal is to make certain that a sound of identical level is heard from each speaker position. The best way to do this is to enter the same speaker level output settings already established by your receiver and processor. Alternatively, you may use a test disc that outputs a fixed tone to all speakers at the same time and adjust the settings here so that the tone is heard at the same level from all speakers.

Video Setup Menu

This menu establishes the DVD's configuration for video format settings such as aspect ratio and output scan.

As with all setup menus, press the **OSD Button** ㉗ to activate the main menu screen, and then press the ◀/▶ **Navigation Buttons** ❺ so that `SETUP` is highlighted. Press the **Enter Button** ㉖, and then use the ▲/▼/◀/▶ **Navigation Buttons** ❺ until the `VIDEO SETUP` menu is highlighted within a white outline and press the **Enter Button** ㉖ again. Finally, press the ◀/▶ **Navigation Buttons** ❺ once more to move the highlight to the **Control Settings** Ⓒ side of the menu screen.

The following adjustments are available on the Video Setup menu:

Aspect Ratio: This setting selects the aspect ratio of video programming. Your choice should be made according to the shape of your video display and your personal preferences. Three choices are available:

- **16:9:** If you have a widescreen (16:9) display, or a display that has a widescreen mode, choose this setting. With this setting, the DVD 31 will adjust the output for widescreen movies so that they fill the entire screen in the proper aspect ratio. Note, however, that in this setting a disc recorded in the 4:3 aspect ratio will appear in the widescreen as a boxed image in the center, with black columns on the left and right side of the screen. Note that if the widescreen option is chosen and a widescreen movie is played on a conventional 4:3 aspect ratio set, the image will be distorted due to vertical compression.
- **Letterbox:** If you have a standard, 4:3 aspect ratio video display, choose this setting if you wish to see the entire frame of the movie as it is recorded on the disc without any image cutoff at the left and right sides. While this allows widescreen movies to be shown in their entirety, they will occupy a smaller portion of the screen and black "letterbox" bars may appear at the top and bottom of the screen.
- **PanScan:** If you have a standard, 4:3 aspect ratio video display and prefer to have widescreen movies displayed without the black bars at the top and bottom of the screen, choose this option. Note, however, that since most DVDs do not contain special "pan/scan" coding that allows the on-screen image to follow the action, you may find that while the image will fill the screen, the vertical spread will cause it to be cropped at the left and right side.

Scan Type: This setting allows you to select between progressive and interlaced scanning for the **Component Video Outputs** ❺ to maximize the image resolution for the type of video display in use. When all desired setup and configuration entries have been made, press the **OSD Button** ㉗ to return the player to normal operation and you are ready to enjoy the finest in DVD or CD playback! Note that the output at the **S-Video** ❺ and **Composite Video** ❻ outputs will always be standard-rate video that is compatible with any television set or video display. Two choices are available:

- **Progressive:** Select this option if you have a video display that is compatible with input sources of 480P or greater. Displays labeled as "HDTV Ready," including virtually all large-screen LCD and plasma displays, are compatible with progressive scan.
- **Interlaced:** Select this option when you are using an older video display that has Y/Pr/Pb component inputs, but which is not capable of displaying high scan rate, or "HD" signals.

Video Mode: This setting affects only the **Component Video Outputs** ❺, and it controls how the video signals are optimized for progressive scan display. In most cases, the "automatic" mode is your best choice, as it senses whether the disc being played was

originally recorded on video or shot on film. However, in some cases you may wish to compensate for errors in the disc authoring that occur when the frame rate is not properly maintained when films are converted to video. Three choices are available:

- **Auto:** This is the recommended setting, as it lets the DVD 31 analyze the signals from the DVD and adjust the output accordingly.
- **Movie:** Choose this option for optimal playback of material that was shot on film, even though you are viewing it on video via a DVD.
- **Video:** Choose this option for optimal playback of material that was shot directly to video, such as concerts and sports programming.

Video Adjustments Menu

This menu allows you to adjust five key parameters of the video signal to compensate for differences between your DVD player and other video sources. You may use either the DVD 31's built-in color bar test signal or a test disc as the standard for the adjustments. To ensure that your system is properly optimized, we strongly recommend that you adjust your video display using the display's own controls before making any changes to the DVD 31's output. Once the display is properly calibrated with all settings on the DVD 31 set to their midpoint, use the controls on this menu to fine-tune the DVD 31's output.

Due to the nature of these settings, the navigation is somewhat different from the DVD 31's other menus and controls. The menu itself is called up in the same way as the other menus. Press the **OSD Button** ㉗ to activate the main menu screen, and then press the **▲/▼ Navigation Buttons** ❺ so that SETUP is highlighted. Press the **Enter Button** ㉖, and then use the **▲/▼/◀/▶ Navigation Buttons** ❺ until the VIDEO ADJUSTMENTS menu box (which contains an icon with slider controls and the word VIDEO, and is located at the bottom of the column in the **Submenus Area** Ⓑ) is highlighted within a white outline. Then press **Enter** ㉖ again.

When you press **Enter** ㉖ the video adjustments will appear inside a black bar at the top of the screen, with either the video from a disc being played or the splash screen shown on the rest of the screen.

To change any of the video adjustments shown at the top of the screen, first press the **▲/▼/◀/▶ Navigation Buttons** ❺ so that the "+" to the right of a parameter name is highlighted to increase the setting or "–" to the right of a parameter name is highlighted to decrease the setting. Then press the **Enter Button** ㉖ to change the value as shown by the number of blue lines to the left or right of the center line. When only the dark center line is shown with no blue lines, the setting is at the midpoint default value.

When adjusting the Black Level setting, note that the adjustment available is to either have the setting at the midpoint, which provides a full "0 to 100" black level setting, or "full", which complies with standards for video with what is called "setup", or a "7.5 to 100" black level setting.

Changes to any of the settings may be made with a test disc playing, or you may use the internal test signal by pressing the **▲/▼/◀/▶ Navigation Buttons** ❺ until the word OFF is highlighted next to the TEST SCREEN line. To activate the test signal, press the **Enter Button** ㉖ and note that a special combination test signal, including both color bars and gray scale along with 100% black and white fields, will be displayed. To recall the video controls, press the **OSD Button** ㉗ and then navigate among the settings and make any necessary changes following the steps in the previous paragraph.

Test Screen

With the test screen showing on your video display, the following adjustments may be made:

- The proper color intensity setting on your TV.
- Proper color adjustments using the color bars, which should be (left to right) black, white, yellow, cyan (turquoise), green, magenta, red, blue, black.

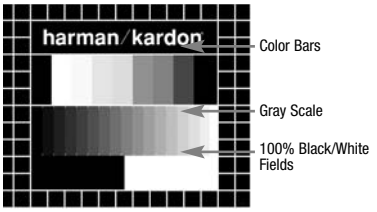

- The proper color transition, seen as sharp separation of the bars.
- The performance of the color circuits in your TV (with "Video" signals); bar edges should show no vertical crawling dots.

With the gray scale and the black/white fields below the color bars, the brightness and contrast of your screen can be adjusted.

TV Picture Adjustment With Test Screen

Brightness Adjustment:

1. Turn down the color control on your TV until the color bars are visible in black and white.
2. Adjust the contrast to the lowest level where you still can see all bars within the gray scale in the test picture separately and clearly.
3. Adjust the brightness so that the bars in the gray scale are all visible. The bar furthest to the left has to be as black as possible rather than gray but the next gradation must clearly be distinct from it. All the bars in the gray scale should be gradually and evenly changing from black to white, left to right.

Contrast Adjustment:

1. Adjust the contrast on your TV until you see a bright white bar in the lower right corner of the screen and a deep-dark-black bar to the left. The optimal contrast setting will depend on your preference and the surrounding light in the TV room.
2. If the brightness of the white bar no longer increases when the contrast is turned up or the borders of the white "harman/kardon" letters on top bloom (overlight) into the black areas (drastically decreasing the sharpness of the type), the contrast has been turned up too much. Reduce the contrast until these effects disappear and the video still looks realistic.
3. If you are watching TV with customary surrounding daylight, adjust the contrast so that a normal video picture has about the same look as the surroundings in your room. That way the eye is relaxed when watching the TV picture. This contrast setting may be reduced when the surrounding light is dimmed, thereby usually improving the sharpness of a video significantly.
4. The gray scale in the middle line needs to have the same clear difference between each bar as before the contrast adjustment. If not, go back to "Brightness Adjustment" and repeat Step 3 and then "Contrast Adjustment," making only minor adjustments each time for optimization.

Color Adjustment

1. When the brightness and contrast are set optimally, turn up the color control to the level of your preference. Adjust to the level where the colors look strong but still natural, not overdone. If the color level is too high, depending on the TV, some of the bars will seem wider or the color intensity will not increase while the control is turned up. Then the color control must be reduced again. Ultimately, you also should test the color intensity with a video – e.g., pictures of natural faces, flowers, fruit and vegetables, and other common natural articles for an optimal setting of the color intensity.
2. Use the large white bar below the gray scale to tweak the warmth of the picture. Every viewer has a preference as to how the glow of the picture should be. Some prefer a little colder picture, some a warmer glow. The Tint function on your TV and the white bar can be used to control this. Adjust the Tint to the level where you feel the white color has the tone you prefer.

TROUBLESHOOTING GUIDE

SYMPTOM	POSSIBLE CAUSE	SOLUTION
Unit does not turn on	• No AC power	• Check AC power plug and make certain any switched outlet is turned on.
Disc does not play	• Disc loaded improperly	• Load disc label-side up; align the disc with the guides and place it in its proper position.
	• Incorrect disc type	• Check to see that disc is CD, CD-R, CD-RW, VCD, MP3-CD, DVD-R and DVD-RW (standard conforming) or DVD-Movie; other types will not play.
	• Invalid Region Code	• Use Region 1 disc only.
	• Rating is above parental preset	• Enter password to override or change rating settings (see page 18).
No picture	• Intermittent connections	• Check all video connections.
	• Wrong input	• Check input selection of TV or receiver.
	• Progressive scan output selected	• Use Progressive Scan mode only with compatible TV.
	• Video Off feature active	• Press **Video Off Button ⓬** to reactivate video circuitry (see page 10).
No sound	• Intermittent connections	• Check all audio connections.
	• Incorrect digital audio selection	• Check digital audio settings.
	• DVD disc is in fast or slow mode	• There is no audio playback on DVD discs during fast or slow modes.
	• Surround receiver not compatible with 96kHz PCM audio	• Use analog audio outputs.
No sound from DVD-Audio discs	• No 5.1-channel direct connections	• Make certain that all six cables required for the **5.1 Direct Audio Output ❹** connection are made between the DVD 31 and your receiver or processor.
	• Receiver input incorrect	• Make certain that the correct input source is selected on your A/V receiver or surround sound processor. On some models, this may be different from the normal DVD input setting.
Picture is distorted or jumps during fast forward or reverse play	• MPEG-2 decoding	• It is a normal artifact of DVD playback for pictures to jump or show some distortion during rapid play.
Some remote buttons do not operate during DVD play; prohibited symbol ⃠ appears (see below)	• Function not permitted at this time	• With most DVDs, some functions are not permitted at certain times (e.g., Track Skip) or at all (e.g., direct audio track selection).
The OSD menu is in a foreign language	• Incorrect OSD language	• Change the display language selection (see page 18).
The ⃠ symbol appears	• Requested function not available at this time	• Certain functions may be disabled by the DVD itself during passages of a disc.
Picture is displayed in the wrong aspect ratio	• Incorrect match of aspect ratio settings to disc	• Change aspect ratio settings (see page 20).
Remote control inoperative	• Weak batteries	• Change both batteries.
	• Sensor is blocked	• Clear path to sensor or use optional outboard remote sensor.
Disc will not copy to VCR	• Copy protection	• Many DVDs are encoded with copy protection to prevent copying to VCR.

In addition to the items shown above, additional information on troubleshooting possible problems with your DVD 31, or installation-related issues, may be found in the list of "Frequently Asked Questions" which is located in the Product Support section of our Web site at www.harmankardon.com.

1) To Cancel a Parental Control Password or Cancel Progressive Scan:

- Press and hold CLEAR button for 5 seconds while the player is on.

2) To Cancel <u>all</u> user settings back to factory default settings:
- Step One: Press "OSD", press "Right Arrow", and then press "Down Arrow".
- Step Two: Enter "1-2-1-1" using the numeric buttons on the remote.
- Step Three: Press "Down Arrow" as many times as required to reach the "Restore Default Setting" line.
- Step Four: Press "Enter" <u>twice</u> to activate the reset process.

All the user settings have been now reset back to the factory default.

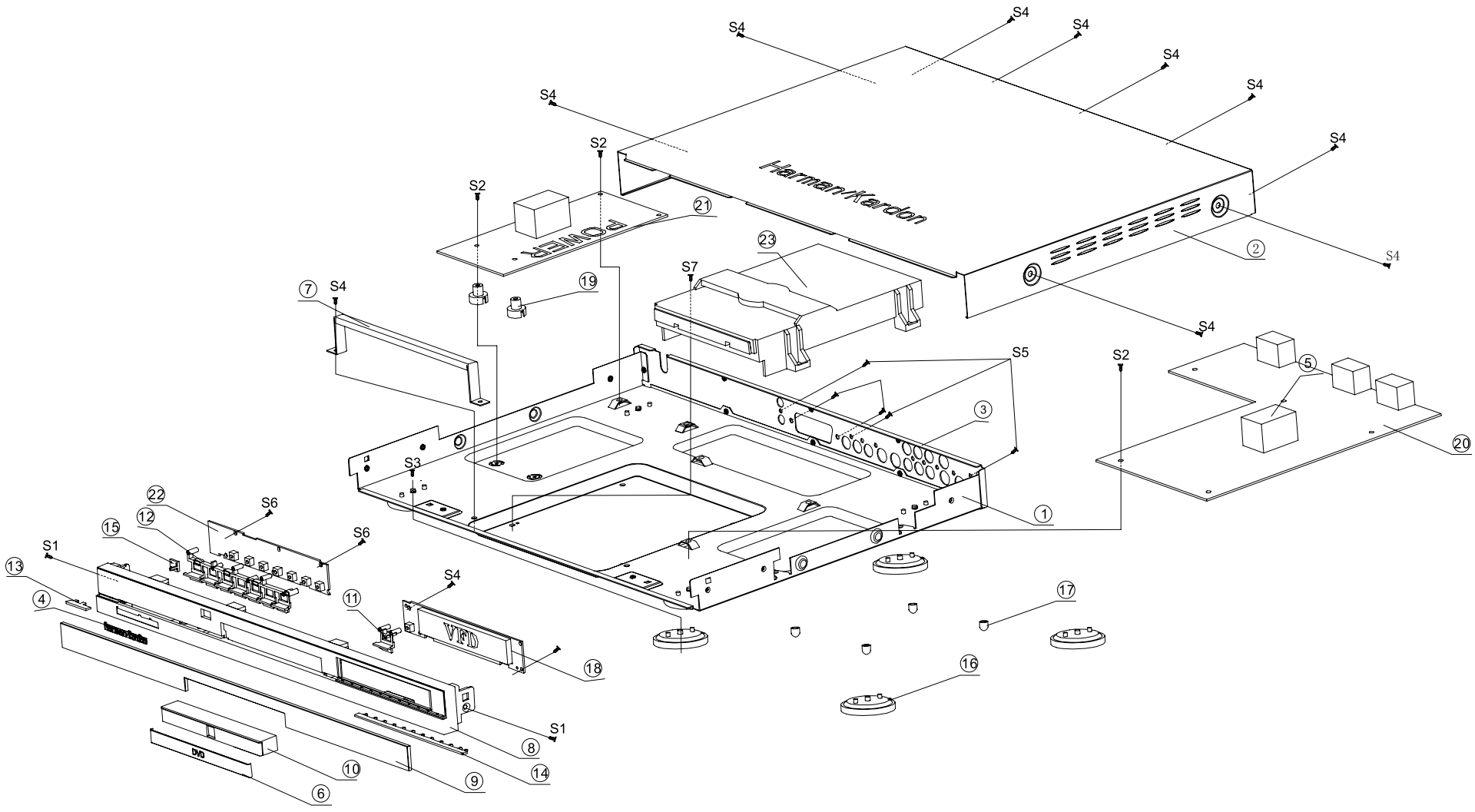

			Name	EXPLODED VIEW	
MODEL NO.	DVD31				
REMARK		APPROVAL		DRAWING	
		CHECK		DESIGN	

DVD 31 EXPLODED VIEW PARTS LIST

LOCATION	PART NUMBER	DESCRIPTION	QTY	SPECIFICATION	
1	380-B22PT001-8000	CHASSIS	1	DVD31-PT001	
2	380-A000022B-0500	TOP COVER		DVD31-PT002	
3	380-C2PT003B-0500	BACK PANEL	1	DVD31-PT003A	
4	600-00000005-0920	HARMAN/KARDON LOGO	1		
5	385-00282810-5200	RADIATOR	1	FOR MAIN BOARD U401	28×28×10
6	385-VD31ZPA2-5000	DISC TRAY WITH ALUMINUM WRAP	1	DVD31ZP-A2	
7	332-300DVD22-0000	TOP COVER SUPPORT	1	DVD31ZP-A2	
8	330-12ZPRE02-8000	PLASTIC FRONT PANEL	1	DVD31ZP-RE02	
9	331-81ZPRE01-8000	PANEL LENS	1	DVD31ZP-RE01	
10	330-21ZPRE07-8000	DISC TRAY FACE COVER	1	DVD31ZP-RE07	
11	331-11ZPRE04-8000	SINGLE KEY BUTTON	1	DVD31ZP-RE04	
12	331-11ZPRE03-8000	MULTI KEY BUTTON	1	DVD31ZP-RE03	
13	330-71ZPRE05-8000	SHORT DECORATIVE STRIP	1	DVD31ZP-RE05	
14	330-71ZPRE06-8000	LONG DECORATIVE STRIP	1	DVD31ZP-RE06	
15	332-41ZPRE08-8000	POWER INDICATOR COVER	1	DVD31ZP-RE08	
16	331-400DVD22-4000	FOOT	4		
17	350-000DVD22-0000	SCREW CAP	4		
18	331-91185165-9000	VFD PCB	1		118.5×16.5mm
19	332-2D2SZ036-0000	PCB PLASTIC FRAME	2	SZ036	Φ8×10
20	300-C001297C-0002	MAIN PCB	1	DVD22"MX0312-009	
21	300-A001254C-0001	POWER PCB	1		
22	300-D01298CA-0002	PANEL PCB	1		
23	206-0000DV34-2202	SANYO LOADER	1	DV34	
		SCREWS			
S1	381-00300634-1202	KBTTO SCREW	4	M3×6	
S2	381-00300614-1311	PWMTTC SCREW	5	M3×6	
S3	381-0040851-1200	RTHO SCREW	4	M4×8	
S4	381-00300614-1912	PWBTTNI SCREW	2	M 3×6	
S5	381-00300811-2200	PAHO SCREW	3	M3×8	
S6	381-00300811-2300	PAHC SCREW	1 11	M3×8	
S7	381-00300814-1312	PWBTTC SCREW	4	M3×8	
S8	381-00300814-1302	PBTTC SCREW	1	M3×8	

harman/kardon Service Bulletin

DVD31 **Nov 04**

Service bulletin # HK2004-003

To: Harman Kardon Service Centers

Models: DVD31/230

Subject: Circuit modification / can't read disc.

In the event you receive any DVD31/230 for service, please check if the below modification is done; if not, please do the following modification.

All units with the below mentioned serial number must have the modification applied, even in case the DVD player came in for a different repair.

1. Remove the eight plated screws holding the top cover to the unit; remove the top cover
2. Locate Q109 and Q110 on the main board (see picture below)
3. Power on the unit, load a disc and press play
4. Measure Q110: if you do **NOT** measure 5V (4.9V) on Q110 collector (HFM), exchange Q109.
5. In any case, exchange Q110 to DTA114EKA
6. Remove R149
7. Power the unit on and test if there is 5V (4.9V) on Q110 collector (HFM) in play mode.
8. Test the unit for general functionality.

Q109, 8050 (Y1)…….. ……. Part number: 121-00008050-T000
Q110, New DTA114EKA…… Part number: 121-DTA114EK-A400

Org circuit

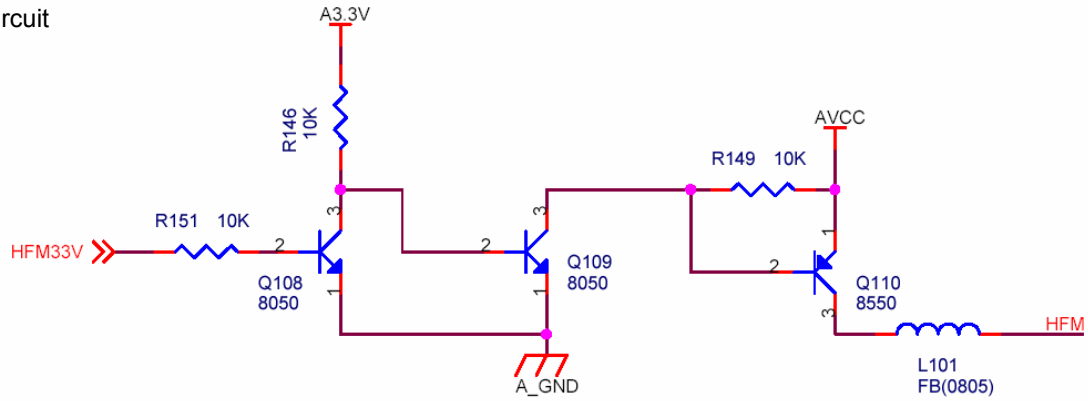

New circuit after modification

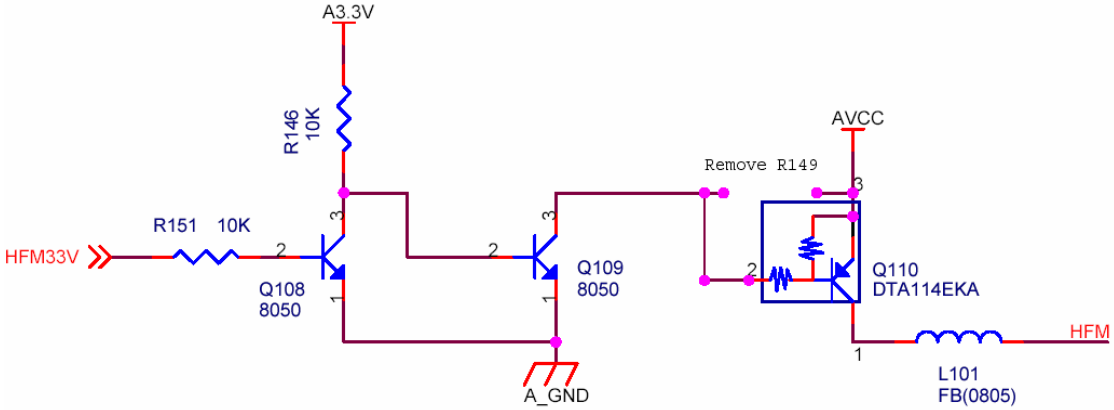

harman consumer group international

harman/kardon Service Bulletin

DVD31 **Nov 04**

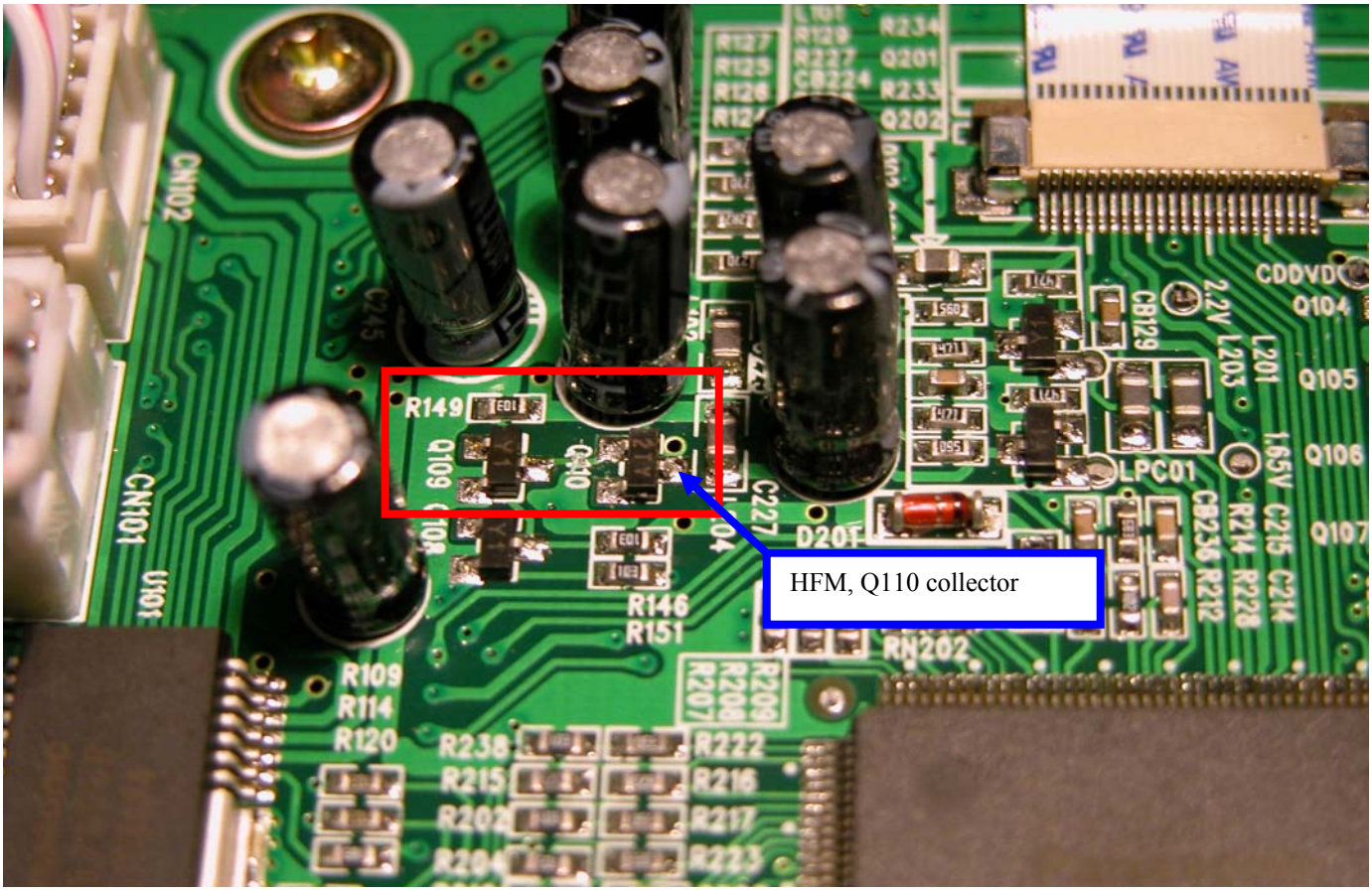

Model #	Serial Number of Change	Status	Action
DVD31/230	WA0010-01001~06015	Q109 may fail	see above service bulletin please note some units are already modified by Harman
	From WA0010-06016	modified in production	None required
DVD31/120 (including DVD31CP)	WA0009-01001~02500 (implemented in Harman US)	Q109 may fail	None required
	From WA0009-02501	modified in production	None required

DVD31 Mechanical Parts List			
Part Numbers	**Qty**	**Description**	**Remarks**
380-B31PT001-8000	1	Chassis	DVD31-PT001
380-A31PT002-8100	1	Top cover	DVD31-PT002
380-C1PT003A-0500	1	back panel	DVD31-PT003A Europe revision
380-C1PT003B-0500			DVD31-PT003B America revision
600-00000005-6920	1	harman/kardon brand	
332-431ZPTA1-0000	1	Aluminum alloy wrap for front panel □□□□□□□	DVD31ZP-A1
332-431ZPTA2-0000	1	Aluminum alloy wrap for disc tray □□□□□□□	DVD31ZP-A2
385-00282810-5200	1	Heat sink	for IC U401, 28mm×28mm×10mm
385-00121623-5200	1	Heat sink	for IC3 on SMPS, 28mm×28mm×10mm
380-D00DVD31-00A3	1	Top cover support □□□□	
433-0000M248-0100	1	Magnetism annulus □□M248	
330-12ZPRE02-8000	1	Plastic Panel	DVD31ZP-RE02
331-81ZPRE01-8000	1	Panel lens □□□□	DVD31ZP-RE01
330-21ZPRE07-8000	1	Disc tray □□	DVD31ZP-RE07
331-11ZPRE04-8000	1	Single key button □□□	DVD31ZP-RE04
331-11ZPRE03-8000	1	More key button □□□	DVD31ZP-RE03
330-71ZPRE05-8000	1	Short decorate strip □□□□	DVD31ZP-RE05
330-71ZPRE06-8000	1	Long decorate strip □□□□	DVD31ZP-RE06
332-41ZPRE08-8000	1	Power Indicator Cover □□□□□□	DVD31ZP-RE08
331-400DVD31-4000	4	Pedestal □□	bronzing□size same as DVD 25□specify color
350-000DVD22-0200	4	Pedestal underlay □□□□□	same as DVD25
332-200SZ003-0200	1	IR receiver head frame □□□□□□□	SZ003□ 5.5mm
350-C0201035-0200	2	VFD soft pad	20mm×10mm×3.5mm
500-10201025-0200	2	Top socket □□□□□□□	
331-7C035040-0010	2	Alumium fastener 01 □□□□	
500-02000000-0020	1	Plastic fastener 02 □□□	3.5mm×40mm
500-02000000-0010	1	Plastic fastener 02 □□□□□□□□	fasten the power cord
332-40000000-0000	4	Screw map □□□□	
500-01025015-0001	1	3M double glue 3M □□□	
313-AH080010-0000	1	Top cover label □□□□	
332-01160015-0001	1	3M double glue 3M□□□160×15mm	
500-08015007-0020	1	Short astigmatism paper □□□□	
500-08105007-0010	1	Long astigmatism paper □□□□	
500-10100515-0000	1	Sponge pad □□□(□□□□,□□□□)	
331-91185165-9000	1	VFD filter VFD□□□	for VFD
500-10201025-0000	1	Sponge pad □□□	
500-010060MM-0000	1	Fibre adgesuve tape □□ □□□long 60mm	
500-010060MM-0000	1	Fibre adgesuve tape □□□□□long 60mm	
331-13000000-0400	1	Protect film □□□(3M□15×50mm)	
500-05025040-0000	1	Pyrocondensation cannula □□□(φ25×40mm)	
500-02000000-0030	1	Lead nip 03 □□□	
500-09150085-0000	1	Insulated piece for power board	stick on chassis□150×85mm
500-09170100-0000	1	Insulated piece for power board	stick on top cover□170×100mm
313-AGDVD220-0001	1	Laser precausion mark □□□□□□	stick on loader

Part Numbers	Qty	Description	Remarks
313-AGDVD220-0002	1	Laser precausion guide □□□□□□	stick on loader
500-0923040-0000	1	Insulated piece for mainboard	stick on chassis□230×40mm
332-200SZ036-0000	2	PCB plastic frame PCB□□□□	SZ036 Φ8×10mm
		CONNECT CABLE	
160-E0140130-EA00	1	14 pin, long 130mm, one soldering and other 2.0mm space socket	connect front panel board and mainboard
160-E0130170-DA00	1	13pin,long 170mm, double 2.54mm space socket.	connect power supplier board and mainboard
160-A0VH0040-0300	1	1 pin, long 40mm, power line, orange color	for power supplier AC connect
162-A0VH0350-3A00	1	Power cord with 350mm fixture	Europe version
162-A0VH0350-3B00			America version
160-E0030260-3A00	1	3 pin, long 260mm, one soldering and other 2.54mm space socket.	connect power supplier board and front panel board
160-E0050260-5A00	1	5 pin, long 260mm, 2.0mm space double socket.	connect loader and mainboard
160-E0060150-6A00	1	6 pin, long 150mm, 2.0mm space double socket.	connect loader and mainboard
160-E0240160-JA00	1	24 pin, long 160mm, 0.5mm space, flat cable	connect loader and mainboard
160-E0100280-JA00	1	10 pin, long 280mm, 1.0mm space ,flat cable.	connect two pieces front panel board
160-E0000004-JA00	1	1pin with 42 line, long 40mm connect ground.	connect front panel and chassis
300-C0311197-U002	1	1197C	DVD31 US version mainboard
300-C0311197-E002			DVD31 EU version mainboard
300-A001254C-0401	1	1254C	SMPS board
300-D01295C1-0C02	1	1295C-1	front panel board, for buttons
300-D01295C2-0C02	1	1295C-2	front panel board, for VFD
300-D001382C-0001	1	1382C	remote control board
206-0000DV34-2202	1	LOADER	SANYO DV34
		PACKAGING	
310-000DVD31-0010	1	Beauty box	EU
310-000DVD31-0110			US
309-000-PM065-0000	2	Polyfoam PM065	
311-08424011-2200	1	Plastic bag for remote control	84×240mm
309-00PM0651-0010	1	Polyfoam PM065-1	310×168×28mm
311-15523011-2200	1	Plastic bag for AV cables	155×230mm
312-AB310000-0000	1	User's manual	EU
312-AB310000-0010			US
312-KBDVD310-0010	1	Guarantee card	only for US
162-B0001012-0000	1	Audio cable	
162-B0001012-0000	1	Video cable	
202-00000511-1200	1	5# battery	
162-H0001012-0000	1	Remote control transmission cable	
162-C0001012-0000	1	S-video cable	
313-AD0DVD31-0000	1	Safety instruction manual	only for EU
313-AD0DVD31-0000	1	Warning card	only for US
555-0DVD31RC-0000	1	Remote control	

Replacement of entire PCB assemblies or entire DVD31 loader is recommended. Electrical parts list is for reference only.

DVD 31 Electrical Parts List

Main Board (1197C)

Part Number	Qty	Reference Designator	Description		Remarks
Resistors					
131-A00000JT-0000	8	R201, R328, R420, R426, R577, R584, R513, R526	Resistor, chip	0Ω 1/10W 0603 5□	
131-A00000JT-0000	2	R578, R579	Resistor, chip	0Ω 1/10W 0603 5□	only for EU 230V
131-A0B068JT-0000	2	3R6, 3R9	Resistor, chip	0.68Ω 1/8W 0805 5□	
131-A0C022JT-0000	2	R126, R127	Resistor, chip	2.2Ω 1/10W 0603 5□	
131-A00022JT-0000	7	R154, R310□R315□R316□R317□R318□R559,	Resistor, chip	22Ω 1/10W 0603 5□	
131-A00027JT-0000	2	R124, R125	Resistor, chip	27Ω 1/10W 0603 5□	
131-A00033JT-0000	5	R217, R218, R219, R222, R223	Resistor, chip	33Ω 1/10W 0603 5□	
131-A00056JT-0000	2	R128, R129	Resistor, chip	56Ω 1/10W 0603 5□	
131-A00075FT-4000	13	R703, R704, R707, R711, R712, R714, R715, R716, R718, R722, R723, R724, R725	Resistor, chip	75Ω 1/10W 0603 1□	
131-A00075FT-4000	3	R708□R710□R713	Resistor, chip	75Ω 1/10W 0603 5□	
131-A00082JT-0000	3	R215, R216, R220	Resistor, chip	82Ω 1/10W 0603 5□	
131-A01010JT-0000	7	R235, 3R14, 3R15 ,R518□R570, R571, R585	Resistor, chip	100Ω 1/10W 0603 5□	
131-A01010JT-0000	2	R505□R572	Resistor, chip	100Ω 1/10W 0603 5□	only for EU 230V
131-A01011JT-0000	1	R558	Resistor, chip	110Ω 1/10W 0603 5□	
131-A01022JT-0000	1	R556□	Resistor, chip	220Ω 1/10W 0603 5□	
131-A01015JT-0000	9	R507, R520, R535, R544, R607, R622□ R635, R649, R557	Resistor, chip	150Ω 1/10W 0603 5□	
131-A00187FT-4000	2	R406□R407	Resistor, chip	187Ω 1/10W 0603 1□	
131-A01027JT-0000	1	2R15	Resistor, chip	270Ω 1/10W 0603 5□	
131-A01033JT-0000	1	R702	Resistor, chip	330Ω 1/10W 0603 5□	only for EU 230V
131-A01039JT-0000	1	2R10	Resistor, chip	390Ω 1/10W 0603 5□	
131-A01047JT-0000	4	R226, R227, R233, R234	Resistor, chip	470Ω 1/10W 0603 5□	
131-A00499FT-4000	12	R504, R509, R517, R522, R604, R609 R619, R624, R632, R637, R646, R651	Resistor, chip	499Ω 1/10W 0603 1□	
131-A01056JT-0000	1	R705	Resistor, chip	560Ω 1/10W 0603 5□	only for EU 230V
131-A00075FT-4000	4	R717, R719, R720, R721	Resistor, chip	75Ω 1/10W 0603 1□	only for EU 230V
131-A00091FT-4000	1	R709	Resistor, chip	91Ω 1/10W 0603 1□	
131-A01015JT-0000	2	R530, R531	Resistor, chip	150Ω 1/10W 0603 1□	
131-A01068JT-0000	8	R506, R519, R574, R575, R606, R621, R634, R648	Resistor, chip	680Ω 1/10W 0603 5□	
131-A02010JT-0000	4	R224, R225, R228, R552□	Resistor, chip	1KΩ 1/10W 0603 5□	
131-A02012JT-0000	2	R156, R555	Resistor, chip	1.2KΩ 1/10W 0603 5□	
131-A02022JT-0000	2	3R17, R553	Resistor, chip	2.2KΩ 1/10W 0603 1□	
131-A02027JT-0000	8	R324, R325, R326, R405, R412, R413, R414, R415	Resistor, chip	10KΩ 1/10W 0603 5□	
131-A02033JT-0000	6	2R3, 2R4, 2R5, 2R6, 2R8, 2R9, R728	Resistor, chip	3.3KΩ 1/10W 0603 5□	only for EU 230V
131-A02039JT-0000	1	R229	Resistor, chip	3.9KΩ 1/10W 0603 5□	
131-A02047JT-0000	3	2R11, 2R12, R237	Resistor, chip	4.7KΩ 1/10W 0603 5□	
131-A02047FT-0000	15	R502,R503,R508,R510,R515,R516,R521,R502	Resistor, chip	4.7KΩ 1/10W 0603 5□	
		R503,R508,R510,R515,R516,R521,R650			

Part Number	Qty	Reference Designator	Description		Remarks
Main Board (1197C)					
131-A02056JT-0000	2	R112, R231	Resistor, chip	5.6KΩ 1/10W 0603 5□	
131-A02062JT-0000	1	R107	Resistor, chip	6.2KΩ 1/10W 0603 5□	
131-A02068JT-0000	2	R647, R653	Resistor, chip	6.8KΩ 1/10W 0603 5□	
131-A02075JT-0000	4	R105, R110, R113, R230	Resistor, chip	7.5KΩ 1/10W 0603 5□	
131-A02082JT-0000	1	R601,	Resistor, chip	7.5KΩ 1/10W 0603 1□	
131-A03010JT-0000	48	3R10, 3R11, 3R12, R109, R114, R130, R131 R132, R133, R134, R137, R138, R146, R151 R200, R202, R203, R204, R205, R206, R207, R208, R209, R210, R212, R221, R238, R410, R411, R417, R418, R419, R511, R524, R525, R528, R554, R581, R583, R611, R625, R638, R640, R652, R656, R665, R666, 2R13	Resistor, chip	10KΩ 1/10W 0603 5□	
131-A03015JT-0000	3	R102, R213, R243	Resistor, chip	15KΩ 1/10W 0603 5□	
131-A03018JT-0000	3	R103, R120, R153	Resistor, chip	18KΩ 1/10W 0603 5□	
131-A03027JT-0000	1	R155	Resistor, chip	27KΩ 1/10W 0603 5□	
131-A03033JT-0000	2	R106, R550	Resistor, chip	33KΩ 1/10W 0603 5□	
131-A03027JT-0000	1	R727	Resistor, chip	27KΩ 1/10W 0603 6□	only for EU 230V
131-A03010JT-0000	2	R580, R582,	Resistor, chip	33KΩ 1/10W 0603 5□	only for EU 230V
131-A01068JT-0000	2	R573, R576,	Resistor, chip	680Ω 1/10W 0603 5□	only for EU 230V
131-A03033JT-0000	1	R701	Resistor, chip	33KΩ 1/10W 0603 5□	only for EU 230V
131-A03068JT-0000	1	R214	Resistor, chip	68KΩ 1/10W 0603 5□	
131-A04010JT-0000	4	R108, R422, 3R13, R549	Resistor, chip	100KΩ 1/10W 0603 5□	
131-A05010JT-0000	1	R232	Resistor, chip	1MΩ 1/10W 06035□	
132-0008033J-T100	5	RN201, RN203, RN204, RN205, RN206	Resistor, thick film chip network	33Ωx4 1/16W 0603 5□	
132-0008227J-T100	1	RN402	Resistor, thick film chip network	2.7KΩx4 1/16W 0603 5□	
132-0008310J-T100	1	RN401	Resistor, thick film chip network	10KΩx4 1/16W 0603 5□	
132-0008347J-T100	1	RN202	Resistor, thick film chip network	47KΩx4 1/16W 0603 5□	
130-T42010JA-0000	2	2R1, 2R2	Fixed carbon film	1KΩ 1/4W 5□	only for EU 230V
130-T41015JA-0000	1	2R7	Fixed carbon film	150Ω 1/4W 5□	only for EU 230V
130-T70039JA-0000	1	R802	Fixed carbon film	39Ω 2W 5□	
Capacitors					
141-C0AC68PH-JT10	1	C302	Capacitor, multilayer ceramic, chip	6.8PF 50V J NPO 0603	
141-C0A010PH-JT10	4	C223, C238, C240, C408,	Capacitor, multilayer ceramic, chip	10PF 50V J NPO 0603	
141-C0A020PH-JT10	6	2C3, 2C4, 2C5, 2C7, 2C8, 2C10,	Capacitor, multilayer ceramic, chip	20PF 50V J NPO 0603	only for EU 230V
141-C0A020PH-JT10	13	C703, C707, C708, C709, C711, C721, C414, C415, C416, C417, C419, C421, C422,	Capacitor, multilayer ceramic, chip	20PF 50V J NPO 0603	
141-C0A022PH-JT10	3	C412, C413, C718,	Capacitor, multilayer ceramic, chip	22PF 50V J NPO 0603	
141-C0A033PH-JT10	1	C229	Capacitor, multilayer ceramic, chip	33PF 50V J NPO 0603	
141-C0A047PH-JT10	1	C221	Capacitor, multilayer ceramic, chip	47PF 50V J NPO 0603	
141-C0A051PH-JT10	2	C712□C714	Capacitor, multilayer ceramic, chip	51PF 50V J NPO 0603	
141-C0A110PH-JT10	12	C508, C513, C533, C544, C610, C622□ C647, C659, C519, C566, C106, C111,	Capacitor, multilayer ceramic, chip	100PF 50V J NPO 0603	
141-C0A122PH-JT10	1	C214	Capacitor, multilayer ceramic, chip	220PF 50V J NPO 0603	

Part Number	Qty	Reference Designator	Description		Remarks
Main Board (1197C)					
141-C0A133PH-JT10	10	C502, C507, C509, C515,C602, C609, C612, C621,C639, C646,	Capacitor, multilayer ceramic, chip	330PF 50V J NPO 0805	
141-C0A147PH-JT10	6	C504, C511, C605, C617, C642, C652	Capacitor, multilayer ceramic, chip	470PF 50V J NPO 0805	
141-C0A110PH-JT10	2	C520, C528□	Capacitor, multilayer ceramic, chip	100PF 50V J NPO 0603	only for EU 230V
141-C0A222PH-JT10	2	C648, C658	Capacitor, multilayer ceramic, chip	2200PF 50V J NPO 0805	
141-C0A410PH-KT00	140	CB101,CB105,CB112,CB113,CB114CB116,CB122, CB126,CB127,CB129,CB131,CB202,CB203,CB205, CB206,CB207,CB208,CB209,CB210,CB213,CB217, CB219,CB224,CB226,CB228,CB230,CB231,CB233, CB236,CB239,CB242,CB301,CB302,CB303,CB304, CB305,CB306,CB307,CB308,CB309,CB310,CB401, CB402,CB403,CB404,CB405,CB406,CB407,CB408, CB409,CB410,CB411,CB411, CB412,CB413,CB415, CB416,CB417,CB418,CB419,CB420,CB421,CB422, CB423,CB424,CB425,CB426,CB427,CB428,CB429, CB430,CB431,CB432,CB433,CB434,CB435,CB436, CB437,CB501,CB503,CB504,CB505,CB506,CB507, CB508,CB509,CB510,CB511,CB512,CB513,CB514, CB515,CB516,CB517,CB601,CB615,CB624,CB625, CB627,CB629,CB630,CB632,CB633,CB649,CB655, CB661,CB662,CB664,CB666,CB667,CB669,CB702, CB705,CB706,CB707,CB710,CB711,CB713,CB714, CB715,CB802,CB803,CB804,CB807,CB808,CB809, CB810,CB811,CB812,CB813,CB816,CB817,CB818, CB819,CB820,3CB4, CB701,CB703, CB704,CB712	Capacitor, multilayer ceramic, chip	0.1uF 50V Z Y5V 0603	
141-C0A410PH-ZT00	5	2CB1, 2CB2, 2CB3, 2CB4, 2CB5	Capacitor, multilayer ceramic, chip	0.1uF 50V Z Y5V 0603	only for EU 230V
141-C0A156PH-JT10	2	C102, C107	Capacitor, multilayer ceramic, chip	560PF 50V J NPO 0805	
141-C0A168PH-JT10	2	2C1, 2C2	Capacitor, multilayer ceramic, chip	680PF 50V J NPO 0805	only for EU 230V
141-C0A210PH-JT10	1	C201	Capacitor, multilayer ceramic, chip	1000PF 50V J NPO 0805	
141-C0A212PH-JT10	12	C503, C506, C510, C514, C603, C608 C613, C620, C640, C645, C650, C657	Capacitor, multilayer ceramic, chip	1200PF 50V J NPO 0805	
141-C0A215PH-JT10	1	C215	Capacitor, multilayer ceramic, chip	1500PF 50V J NPO 0603	
141-C0A256PH-JT10	1	C222	Capacitor, multilayer ceramic, chip	5600PF 50V J NPO 0603	
141-C0A310PH-KT10	4	C220, C237, C243, 3C20	Capacitor, multilayer ceramic, chip	0.01uF 50V K X7R 0603	
141-C0A183PH-KT10	1	C232	Capacitor, multilayer ceramic, chip	0.018uF 50V K X7R 0603	
141-C0A333PH-KT10	1	C218	Capacitor, multilayer ceramic, chip	0.033uF 50V K X7R 0603	
141-C0A510PH-ZT10	4	C216, C234, C235, 3C19	Capacitor, multilayer ceramic, chip	luF 50 Z Y5V 0603	
0A00	2	C713, C715	Capacitor, AL.electrolytic	1uF 6.3V 20□	
0A00	2	C227, C225	Capacitor, AL.electrolytic	4.7uF 10V 20□	
140-DCA010UD - 0A00	9	C121, C204, C410, C529, C626, C628, C663, C665, C524	Capacitor, AL.electrolytic	10uF 10V 20□	
0A00	3	C717, C720, C726	Capacitor, AL.electrolytic	22uF 6.3V 20□	
0A00	3	C301, C719, C725	Capacitor, AL.electrolytic	47uF 6.3V 20□	
140-DCA047UD-0A00	4	C117, C118, 2C12, C244	Capacitor, AL.electrolytic	47uF 10V 20□	

Part Number	Qty	Reference Designator	Description		Remarks
Main Board (1197C)					
140-DCA047UE -0A00	22	C303,C512,C538, C541,C542, C553,C554,	Capacitor, AL.electrolytic	47uF 16V 20□	
		C555,C562,C563,C564,C606,C618,C631,			
		C634,C643,C653,C668,C670, C616, C624,			
		C112			
140-DCA047UE -0A00	4	C505□C539□C526□C552□	Capacitor, AL.electrolytic	47uF 16V 20□	only for EU 230V
140-DCA022UG -0A00	11	3C1, 3C2, 3C3, 3C4, 3C5, 3C6,	Capacitor, AL.electrolytic	22uF 35V 20□	
		3C7, 3C8, 3C11, 3C12, 3C17			
140-DCA110UD -0A00	21	C128, C418, C517, C522, C614, C623, C819, C133,	Capacitor, AL.electrolytic	100uF 10V 20□	
		C150, C654, C660,C115, C101, C103, C130, C401,			
		C402, C409, C420, C724, C716,			
140-DCA110UF -0A00	5	C810,C817, C801, C802, C805	Capacitor, AL.electrolytic	100uF 25V 20□	
140-DCA122UD -0A00	14	C727,C806, C808, C816, C825, C811,C245,	Capacitor, AL.electrolytic	220uF 10V 20□	
		C403, C405,C803,C807, C809, C404,3C10,			
140-DCA122UE -0A00	4	C406, C814, C815, C824	Capacitor, AL.electrolytic	220uF 16V 20□	
140-DCA133UD-0A00	2	C722□C723	Capacitor, AL.electrolytic	330uF 10V 20□	
140-DCA147UD-0A00	1	C710	Capacitor, AL.electrolytic	470uF 10V 20□	
140-DCA110UG -0A00	2	C547, C548	Capacitor, AL.electrolytic	100uF 35V 20□	
140-DCA215UC -0A00	1	C701	Capacitor, AL.electrolytic	1500uF 6.3V 20□	
Semiconductors					
110-B0IN4148-0A00	19	2D1, 3D1, 3D2, 3D3, 3D4, 3D5, 3D6, 3D7,	Diode	1N4148, SMD	
		3D8, 3D11, D201, D501, D502, D503, D504,			
		D505, D401, D506, D508			
110-D000C061-0T00	1	3ZD1	Zener Diode	Zener Diode, 6.1V, In-line Package	
110-B0IN5953-0A00	3	D801□D802□D803	Diode	1N5393, In-line Package	
121-00008050-T000	11	Q111, Q201, Q202, Q103, Q104, Q105,	Transistor	8050(NPN) SOT23	SMD
		Q106, Q107, Q108, Q109, Q1			
121-00008550-T000	6	Q101, Q102, Q112, 2Q4, Q507, Q508,	Transistor	8550(PNP) SOT23	SMD
121-00008550-T000	1	Q701	Transistor	8550(PNP) SOT23	SMD, only for EU 230V
121-DTC343TK-T400	8	Q502, Q503, Q505, Q506, Q602, Q604, Q606, Q607	Transistor, ROHM	DTC343TK(NPN) SOT23	SMD
121-DTC343TK-T400	6	2Q1, 2Q2, 2Q3, Q501, Q504, Q704	Transistor, ROHM	DTC343TK(NPN) SOT23	SMD, only for EU 230V
121-DTA114EK-A400	1	Q110	Transistor, ROHM	DTA114EKA(PNP) SOT23	SMD
102-AN8785SB-6000	1	U101	IC, Panasonic, Motor Driver	AN8785SB, HSOP042	SMD
101-PT28C020-C000	1	U201	IC, PT Servo FLASH.	PT28C020-70JC, PLCC	SMD, firmware burn-in
100-MN103S47-1000	1	U202	IC, Panasonic, Servo chip	MN103S47JRB, 176P, QFP	SMD
101-HY57V641-6800	1	U301	IC, Hyundai, SDRAM	HY57V641620HGT-7, 54P, TSOP54	SMD
102-0AML3370-1000	1	U401	IC, Amlogic, decoder	AML3370, 208P, PQFP	SMD
101-0NJM4558-6000	1	U503	IC, JRC, Pre-amp	NJM4558, 8P, SOP	SMD, only for EU 230V
102-00LM833M-6000	2	U602, U604	IC, NS, Pre-amp	LM833, 8P, SOP	SMD
101-AM29LV16-8400	1	U302	IC, AMD, Flash	AM29LV160DB-90EC, 48P,	SMD, firmware burn-in
8400			IC, Fujitsu, Flash	MBM29LV160BE-70P, 48P,	
102-074HCT14-6000	1	U404	IC, Philips, Hex inverting Schmitt trigger	74HCT14, 14P, SO14	SMD

Part Number	Qty	Reference Designator	Description		Remarks
Main Board (1197C)					
102-0OPA2134-6000	3	U502, U504, U505	IC, BB, Pre-amp	OPA2134, 8P, SOP	SMD
102-00WM8740-6000	3	U501, U601, U606	IC, Wolfson, Audio DAC	WM8740, 28P, SSOP	SMD
102-BH7862FS-6000	1	U703	IC, Rohm, Video Buffer	BH7862FS, 32P, SSOP-A32	SMD
102-S018EZ01-0000	1	U801	IC, Sharp, Voltage Regulator	O18EZ01, PQ025	SMD
102-00LM9022-6000	1	3U3	IC, NS, Vacuum Fluorescent Display Filament Driver	LM9022, 8P, SO8	SMD
102-0AT24C64-6000	1	U403	IC, Atmel, EEPROM	AT24C64, 8P, SOP	SMD, firmware burn-in, for EU version
102-0AT24C64-6010					SMD, firmware burn-in, for US version
105-SHAPC817-1000	1	2U1	IC, Sharp, Photoelectric Coupler	PC817, 4P, DIP	DIP
105-000BA05T-8000	1	U802	IC, Rohm, Voltage Regulator	BA05T, 3P, TO-220	In-line Package
105-000l7812-8000	1	U803	IC, NS, Voltage Regulator	L7812, 3P, TO-220	In-line Package
105-000l7912-8000	1	U804	IC, NS, Voltage Regulator	L7912, 3P, TO-220	In-line Package
105-00078L12-8000	1	2U2	IC, NS, Voltage Regulator	78L12, 3P, TO-92	In-line Package, only for EU 230V
105-00BA033T-8000	1	U402	IC, Rohm, Voltage Regulator	BA033T, 3P, TO-220	In-line Package
Miscellaneous					
217-03386003-2200	1	Y201	Fundamental. Oscillator	Package	
217-02700003-2200	1	Y401	Fundamental. Oscillator	Package	
152-1A205001-A000	8	2FB1, 2FB2, 2FB3, 2FB4,2FB5, 2FB6, 2FB7, 2FB8	Bead, chip	Impedance is 50Ω, 0603	only for EU 230V
152-1A205001-A000	14	FB401□FB402□FB403□FB404,FB405, FB406, FB407, FB501,FB701, FB702, FB703, FB704, FB705, FB706	Bead, chip	Impedance is 50Ω, 0603	SMD
152-1B205001-A000	30	L101, L102, L103, L104, L105, L106, L107, L201, L202, L203, L204, L205L401, L402, L403, L404, L405, L406, L407 FB801, FB802, FB803, FB804, FB805, FB806, FB807, FB808, FB809, FB810, FB811	Bead, chip	Impedance is 50Ω, 0805	SMD
151-3B0B39K1-A000	1	L704,	Inductor, multilayer ceramic, chip	0.39μH HDW0805UC3R9JGT, 0805	SMD
151-3B0B68K1-A000	2	L702, L703,	Inductor, multilayer ceramic, chip	0.68μH HDW0805UC6R8JGT, 0805	SMD
181-00050241-0100	1	CN103	Connector	24pin 0.5mm connector, SMD	
187-1FA513TZ-0540	1	J503	Jack, Sharp, Fiber optic output jack with shutter	GP1FA513TZ, In-line Package	
186-0AV1846G-1300	1	J501	Jack, YuanChang (□□), Coaxial output jack	AV1-8.4-6G, In-line Package	Orange
186-0AV2841G-1300	1	J502	Jack, YuanChang (□□), two channels audio output jack	AV2-8.4-1G, In-line Package	Down red & up white
186-AV68410G-1300	1	J601	Jack, YuanChang (□□), six channels audio output jack	AV6-8.4-10, In-line Package	Down red green gray & up white purple blue

Part Number	Qty	Reference Designator	Description		Remarks
Main Board (1197C)					
186-0AV4845G-1300	1	J703	Jack, YuanChang (□□), Video output jack	AV4-8.4-5, In-line Package	Down blue red & up green yellow
187-0000DSW6-0360	1	J701	Jack, YuanChang (□□), S-video output jack	DSW-6, In-line Package	
187-00000000-0740	1	2J1	Jack, QiangSheng (□□), SCART output jack	SCART, In-line Package	DIP, only for EU 230V
187-00000000-0940	1	2J2	Jack, BeiBaiXiang (□□□), IR in/out jack	SCJ351P00XS0B00 (BLACK), In-line Package	Black
180-200PH05A-5100	1	CN101	Connector	PH-5A, 5P, In-line Package	
180-200PH06A-5100	1	CN102	Connector	PH-6A, 6P, In-line Package	
180-200PH07A-5100	2	J402, J403	Connector	PH-7A, 7P, In-line Package	
180-254PH13A-5100	1	J801	Connector	TJC3-13A, 13P, In-line Package	
Front Panel (1295C)					
Resistors					
131-B01030JT-0000	9	3R48, 3R8, 3R54, 3R38, 3R23, 3R53, 3R36, 3R55, 3R21	Resistor, chip	300Ω 1/8W 0805 5□	
131-B01012JT-0000	1	3R7	Resistor, chip	120Ω 1/8W 0805 5□	
131-A01047JT-0000	1	3R19	Resistor, chip	470Ω 1/10W 0603 5□	
131-B02033JT-0000	1	3R4	Resistor, chip	3.3KΩ 1/8W 0805 5□	
131-A02047JT-0000	7	3R5, 3R18, 3R22, 3R26, 3R28, 3R33, 3R35	Resistor, chip	4.7KΩ 1/10W 0603 5□	
131-A03010JT-0000	5	3R1, 3R2, 3R3, 3R20, 3R41	Resistor, chip	10KΩ 1/10W 0603 5□	
Capacitors					
141-C0A410PH-JT00	6	3CB1, 3CB2, 3CB3, 3CB5, 3CB7, 3CB8	Capacitor, multilayer ceramic, chip	0.1uF 50V Z Y5V 0603	
141-C0A022PH-JT00	2	3C15, 3C16	Capacitor, multilayer ceramic, chip	22PF 50V J NPO 0603	
141-C0A030PH-JT00	1	3C9	Capacitor, multilayer ceramic, chip	30PF 50V J NPO 0603	
141-C0B510PH-JT00	1	3C18	Capacitor, multilayer ceramic, chip	1uF 50V Z Y5V 0805	
140-CCA047UD-JT00	1	3C21	Capacitor, AL.electrolytic	47UF 10V 20□	
Semiconductors					
111-B01N4148-0A00	2	3D9, 3D10	Diode	IN4148, SMD	
110-F65018CP-9A10	8	3LD2, 3LD3, 3LD4, 3LD5, 3LD6, 3LD7, 3LD8, 3LD9	Diode, color is highlight blue	HFBA65018CPΦ5, 2P, In-line Package	
110-FHFT503C-AA10	1	3LD1	Diode, color is blue&amber	HFT503CPBOΦ3, 3P, In-line Package	
121-00008550-T300	4	3Q2□ 3Q3□ 3Q4, 3Q8	Transistor	8550 SMD	

Part Number	Qty	Reference Designator	Description		Remarks
Front Panel (1295C)					
121-00008050-T400	1	3Q1	Transistor	8050 SMD	
103-CF74504P-1240	1	3U1	IC, Microchip, MCU	CF745-04/P, 18P, DIP	
102-LC75710N-1000	1	3U4	IC, Sanyo, VFD driver	LC75710NE, SMD	
Miscellaneous					
105-0HL38B17-1000	1	3U2	IR receiver	HL38B17, 3P, In-line Package	
190-0001301F-0120	1	3U5	VFD	VFD22-1301F	
170-C0000004-0000	8	3K2 3K3 3K4 3K5 3K6 3K7 3K8 3K1	Touch switch	6×6	
384-00030170-0500	1	3JMP1	press pring	Φ3×17mm	
187-00001010-0000	2	3CN1,3CN4	10PIN, 1.0MM, DIP	Connector	
152-0B005001-T000	1	3FB1	Bead, chip	Impedance is 50Ω, 8050	
217-00400003-2200	1	3Y1	Fundamental. Oscillator	4.000MHz, In-line Package	
Power Supply Board (1254C)					
Resistors					
130-0RNTC5D9-0000	1	NTC	NTC thermistor	NTC-5D-9	
130-M10D471K-0000	1	RV1	Zinc oxide varistor	MYG10K471	
130-T45010JT-0000	1	R1	Fixed carbon film	1MΩ 1/4W 5□	
130-T63068JT-0000	1	R2	Fixed carbon film	68KΩ 1W 5□	
130-T64036JT-0000	1	R3	Fixed carbon film	360KΩ 1W 5□	
130-T42022JT-0000	3	R17 R18 R22	Fixed carbon film	2.2KΩ 1/4W 5□	
130-T42051JT-0000	3	R23 R24 R25	Fixed carbon film	5.1KΩ 1/4W 5□	
130-T43010JT-0000	1	R15	Fixed carbon film	10KΩ 1/4W 5□	
130-T40010JT-0000	2	R4 R6	Fixed carbon film	10Ω 1/4W 5□	
130-T43047JT-0000	1	R5	Fixed carbon film	47KΩ 1/4W 5□	
130-T40047JT-0000	1	R21	Fixed carbon film	47Ω 1/4W 5□	
130-T41010JT-0000	1	R16	Fixed carbon film	100Ω 1/4W 5□	
130-T41022JT-0000	3	R13 19 R20	Fixed carbon film	220Ω 1/4W 5□	
130-T41068JT-0000	1	R14	Fixed carbon film	680Ω 1/4W 5□	
130-T42010JT-0000	1	R26	Fixed carbon film	1KΩ 1/4W 5□	
Capacitors					
140-CGA310PO-0A00	1	CX1	High-voltage metallized polyester film	0.1uF 275V 20□ X-type	

Part Number	Qty	Reference Designator	Description		Remarks
Power Supply Board (1254C)					
140-CGA147PQ-0A00	2	CY1 CY2	High-voltage metallized polyester film	470PF 400V 20□ Y1-type	
140-CGA210PQ-0A00	1	CY3	High-voltage metallized polyester film	1000PF 400V 20□ Y1-type	
140-CGA310PW-0A00	1	C1	High-voltage metallized polyester film	0.01uF 1KV 20□	
140-CHB347PF-JA00	2	C2 C13	Radial leads mlcc	0.047uF 50V 20□	
140-CHB368PF-JA00	1	C3	Radial leads mlcc	0.068uF 50V 20□	
140-CHB410PF-JA00	6	C10 C11 C12 C14 C15 C16	Radial leads mlcc	0.1uF 25V 20□	
0A00	1	EC3	Capacitor, AL.electrolytic	4.7uF 160V 20□	
140-DCAC22UF-0A00	1	EC22	Capacitor, AL.electrolytic	2.2uF 25V 20□	
140-DCA047UH-0A00	1	EC2	Capacitor, AL.electrolytic	47uF 50V 20□	
140-DCF047UQ-0A00	1	EC1	Capacitor, AL.electrolytic	47uF 400V 105ºC 20□ 18x21mm,105ºC	
140-DCA047UF-0A00	2	EC17 EC18	Capacitor, AL.electrolytic	47uF 25V 20□	
140-DCA110UF-0A00	2	EC11 EC12	Capacitor, AL.electrolytic	100uF 25V 105ºC 20□	
140-DCA122UE-0A00	4	EC5 EC6 EC16 EC21	Capacitor, AL.electrolytic	220uF 16V 105ºC 20□	
140-DCA122UF-0A00	4	EC9 EC10 EC14 EC15	Capacitor, AL.electrolytic	220uF 25V 105ºC 20□	
140-DCA147UE-0A00	1	EC4	Capacitor, AL.electrolytic	470uF 16V 105ºC 20□	
140-DCF210UE-0A00	2	EC19 EC20	Capacitor, AL.electrolytic	1000uF 16V 105ºC 20□	
Semiconductors					
110-B0IN4001-0A00	1	D17	Diode	IN4001, In-line Package	
110-B0IN4007-0A00	4	D1 D2 D3 D4	Diode	IN4007, In-line Package	
110-B00FR104-0A00	5	D6 D8 D10 D11 D13	Fast recovery rectifiers diode	FR104, In-line Package	
110-B00FR107-0A00	1	D7	Fast recovery rectifiers diode	FR107, In-line Package	
110-B0IN4148-0A00	3	D14 D16 D18	Switching Diode	1N4148, In-line Package	
110-B021DQ10-0A00	1	D12	Diode	21DQ10, In-line Package	
110-B031DQ06-0A00	1	D15	Diode	31DQ06, In-line Package	
110-B0001U08-0A00	1	D5	Diode	1U08, In-line Package	
110-D000C160-0A00	1	ZD1	Zener Diode	16V 1/2W, In-line Package	
110-D000C180-0A00	1	ZD2	Zener Diode	18V 1/2W, In-line Package	
110-0MCR1006-0A00	1	SC1	Silicon controlled rectifiers	MCR100-6, In-line Package	
120-002N5551-A000	1	Q1	Transistor	2N5551, 3P, TO-92	
120-000C8550-A400	1	Q3	Transistor	C8550, 3P, TO-92	
120-00009014-A000	1	Q2	Transistor	9014, 3P, TO-92	
105-KA5l0365-1000	1	IC1	IC,Fairchild, Power Switch	KA5L0365RN, 8P, DIP	
105-KA5M0265-1000	1	IC1	IC,Fairchild, Power Switch	KA5M02659RN, 8P, DIP	

Part Number	Qty	Reference Designator	Description		Remarks
Power Supply Board (1254C)					
105-000KA431-8000	1	IC2	IC,Fairchild, Precision Adjustable Voltage Regulator	KA431, 3P, In-line Package	
105-00BA033T-8000	1	IC6	IC, Rohm, Voltage Regulator	BA033T, 3P, In-line Package	
105-000LM317-8000	1	IC5	IC, NS, Voltage Regulator	LM317, 3P, In-line Package	
105-00LM7805-8000	1	IC3	IC, NS, Voltage Regulator	LM7805,3P, In-line Package	
105-000PC817-1000	1	PH1	IC, Sharp, Photoelectric Coupler	PC817, 4P, DIP	
Miscellaneous					
154-0L630010-0000	1	L7	Filter inductor	L630-10uH	
154-B0810020-0000	1	L6	Filter inductor	0810-20UH	
154-B0608020-0000	4	L3 L4 L5 L8	Filter inductor	0608-20uH	
154-BLCLE650-0000	1	LF1	Common Mode Choke	LCL ET20-50mH	
	1	FU1	Fuse Holder	Fuse Holder	
210-01000250-2000	1	FU1	Fuse	T1AL/250V	
150-BBCKEC28-0020	1	TR1	Transformer	BCK-EC2802	
180-000VH03A-3100	1	JP1	Connector	Vertical VH three holes two pins(white)	
180-000VH03A-3110	1	JP2	Connector	Vertical VH three holes two pins(orange)	
180-0TJC303A-5100	1	CN1	Connector	TJC3-3A, 3P, In-line Package	
180-0TJC303A-5100	1	CN2	Connector	TJC3-13A, 13P, In-line Package	

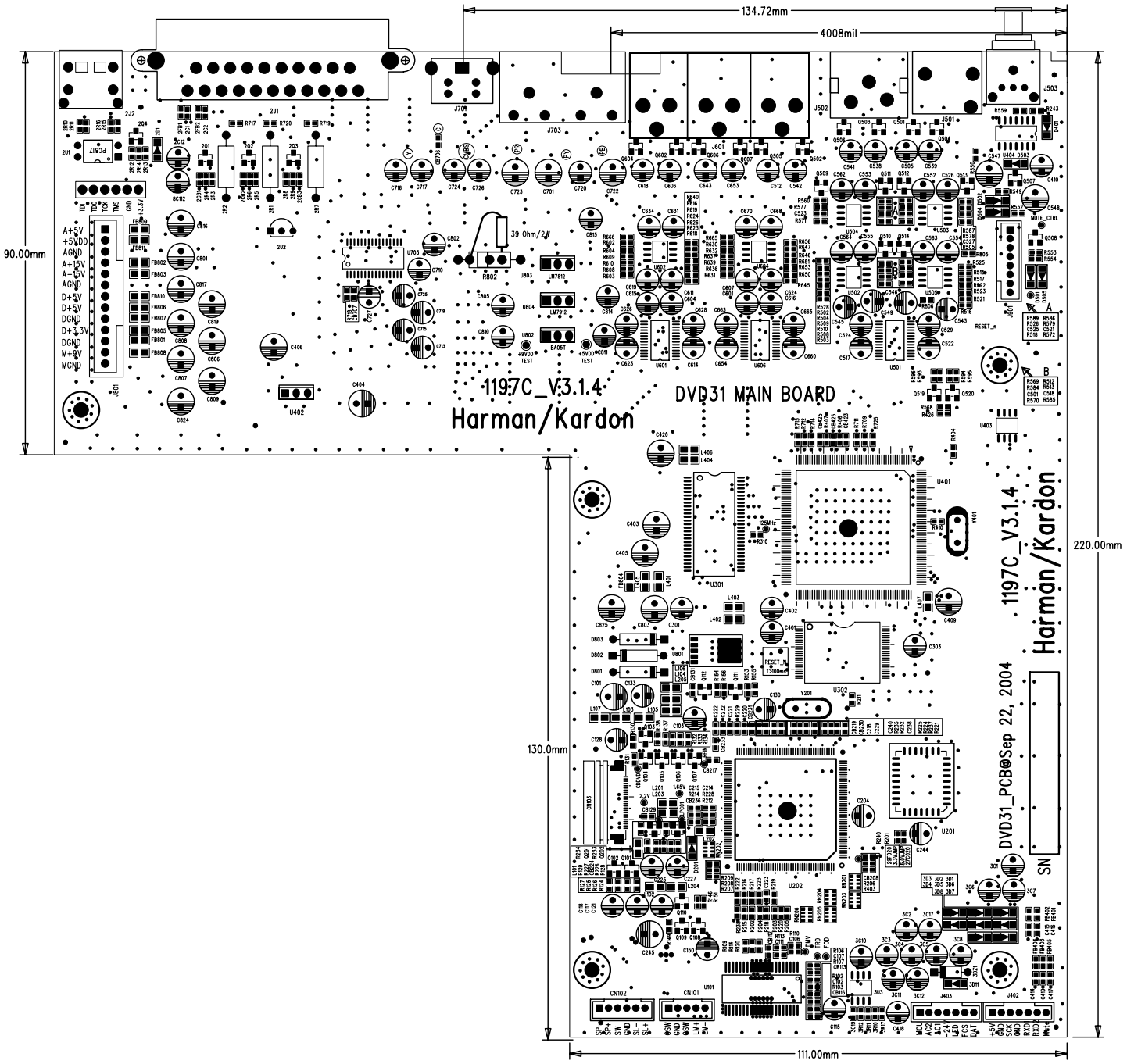
134.72mm
4008mil
90.00mm
220.00mm
130.0mm
111.00mm
1197C_V3.1.4
DVD31 MAIN BOARD
Harman/Kardon
1197C_V3.1.4
Harman/Kardon
DVD31_PCB@Sep 22, 2004
SN
39 Ohm/2W

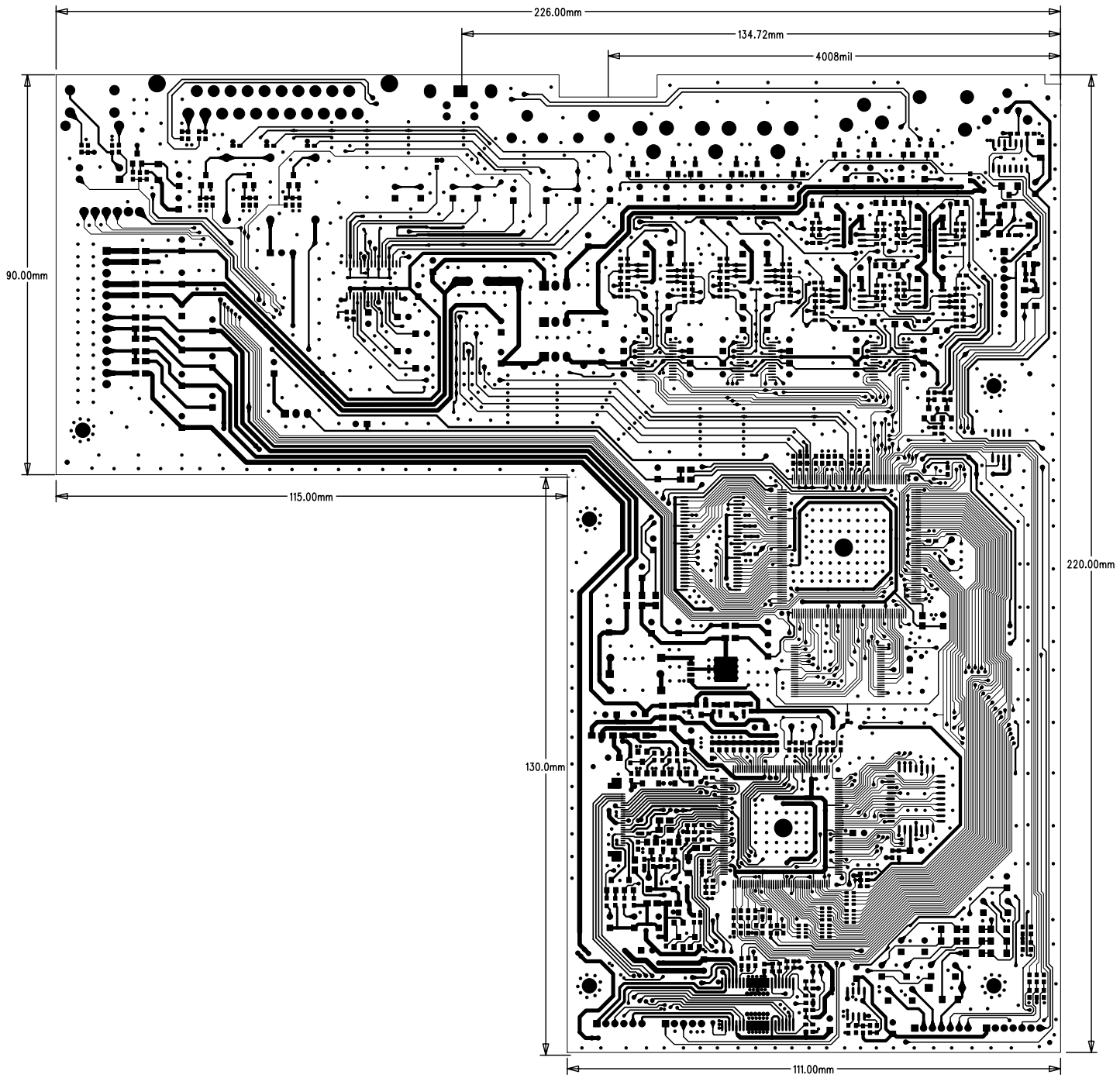
226.00mm
134.72mm
4008mil
90.00mm
115.00mm
220.00mm
130.0mm
111.00mm

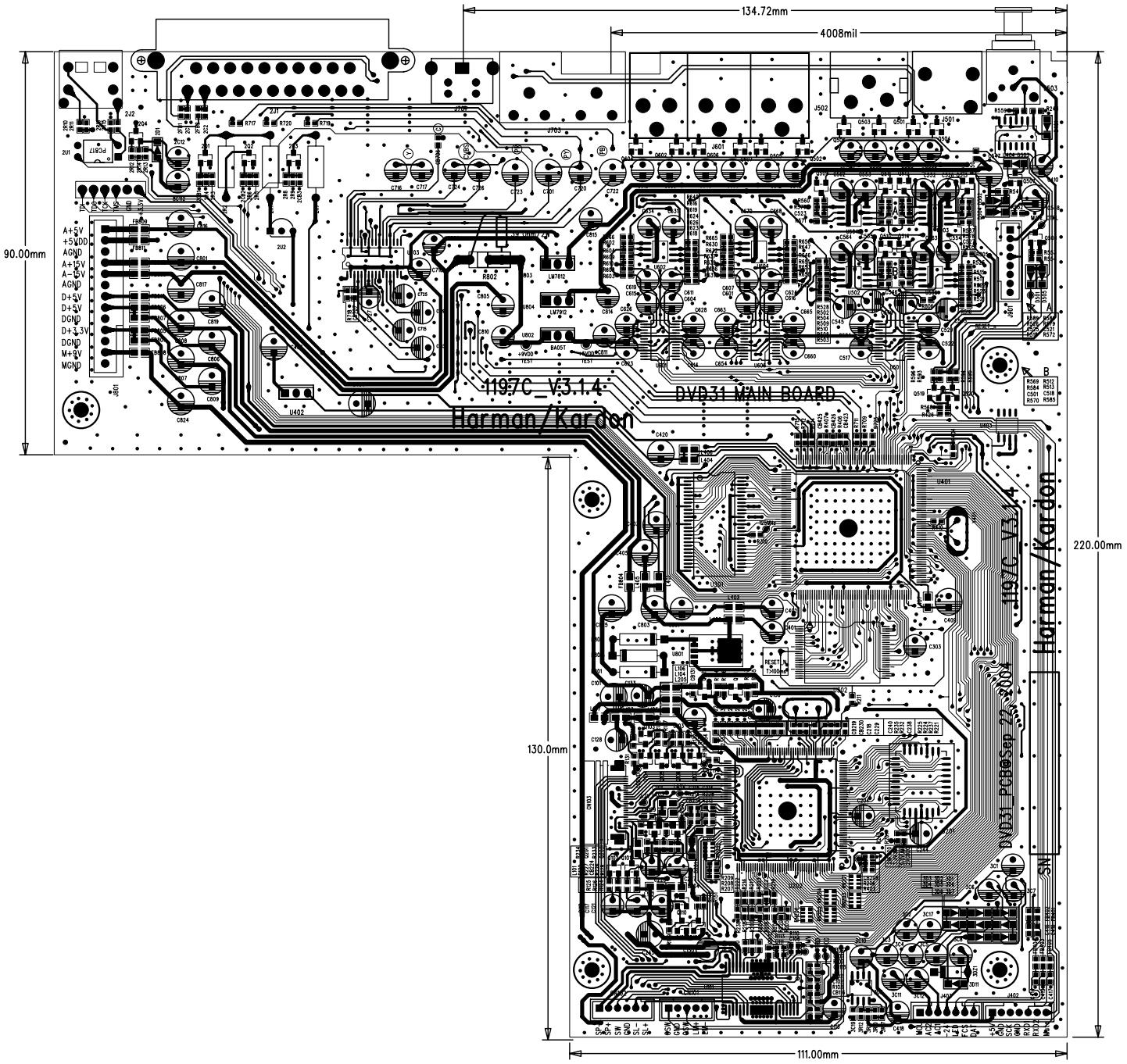
134.72mm
4008mil
90.00mm
220.00mm
130.0mm
111.00mm
1197C_V3.1.4
DVD31 MAIN BOARD
Harman/Kardon
DVD31 PCB@Sep 22 2004
SN

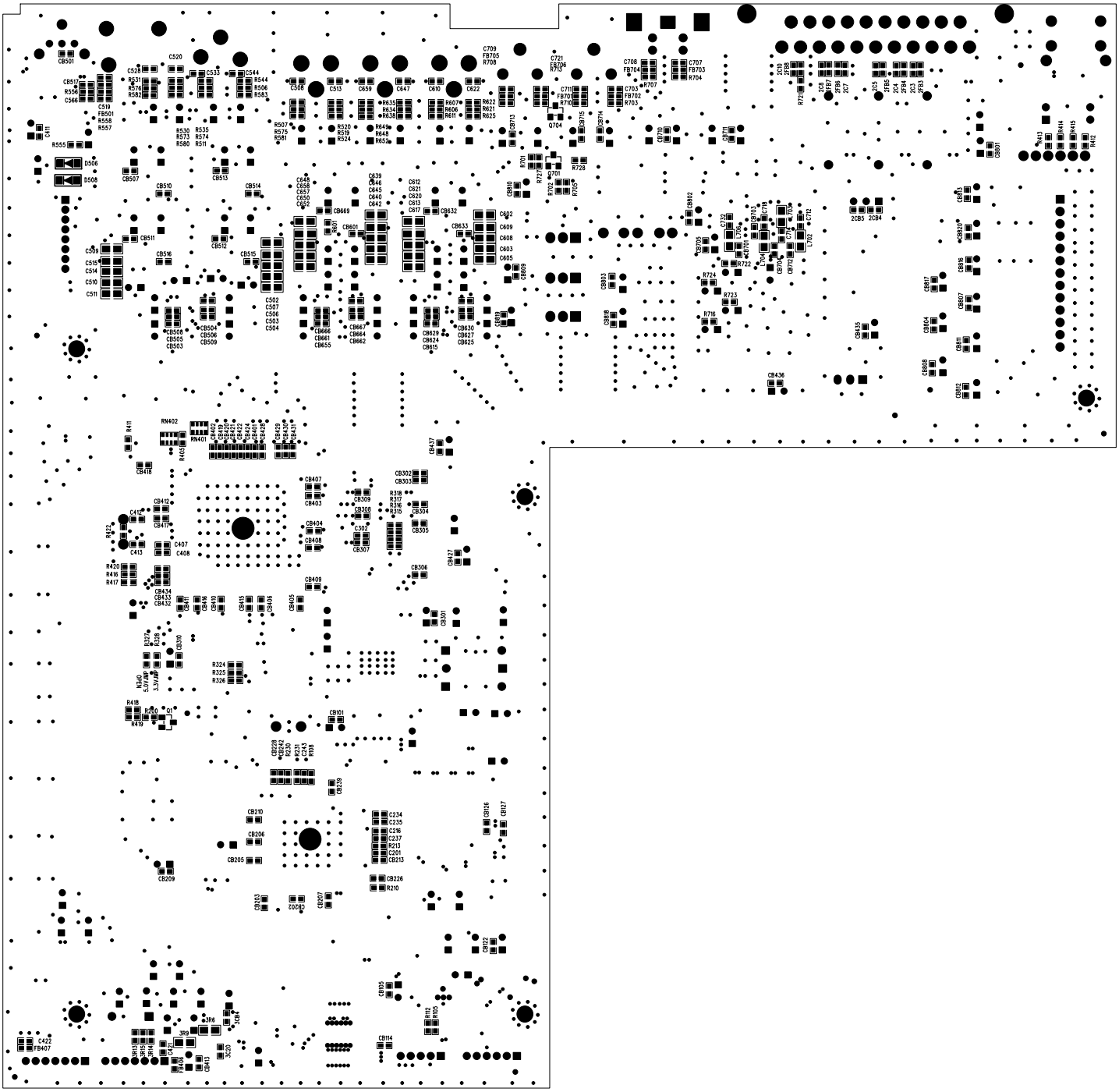

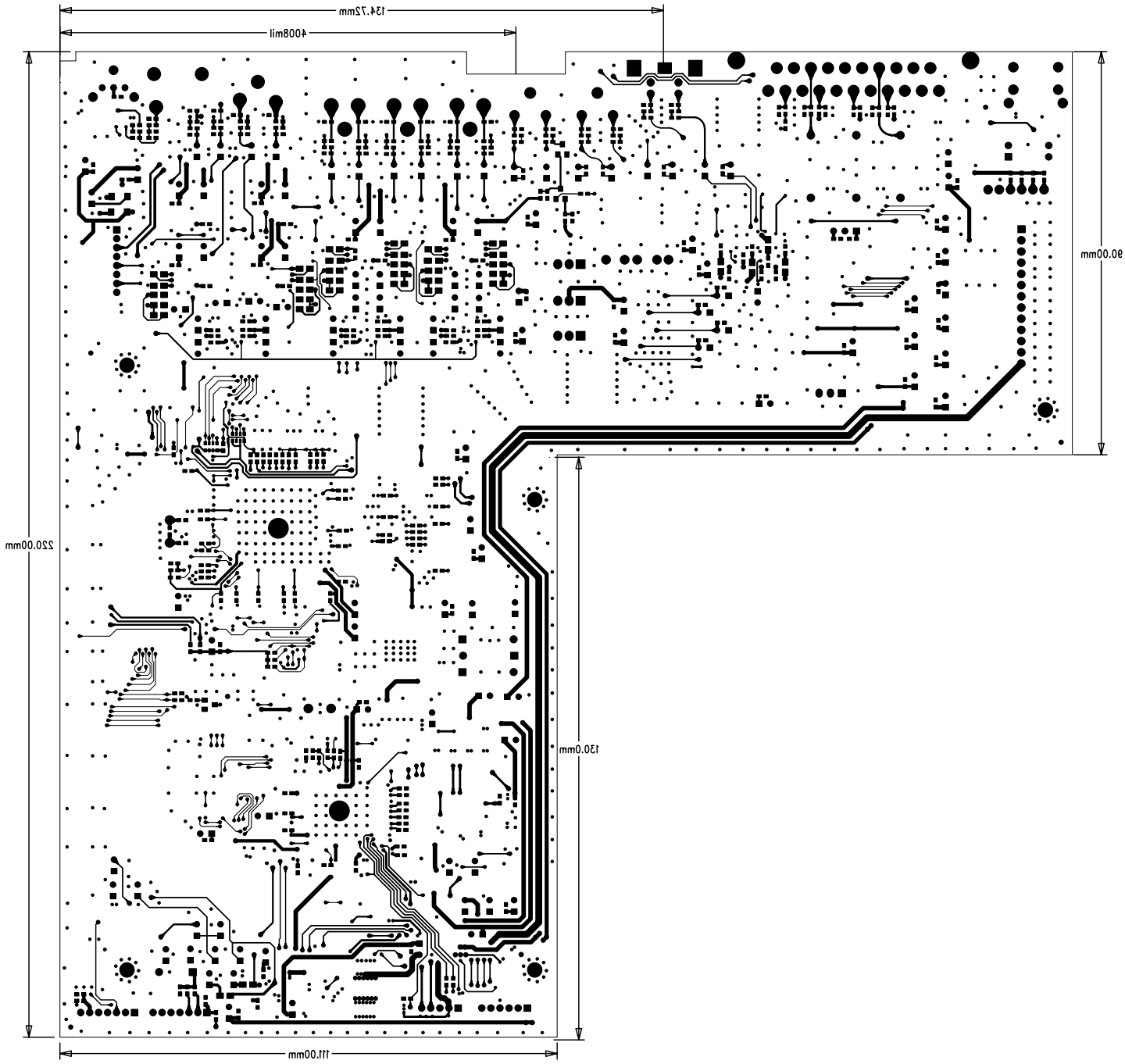
134.72mm
4008mil
90.00mm
220.00mm
130.0mm
111.00mm

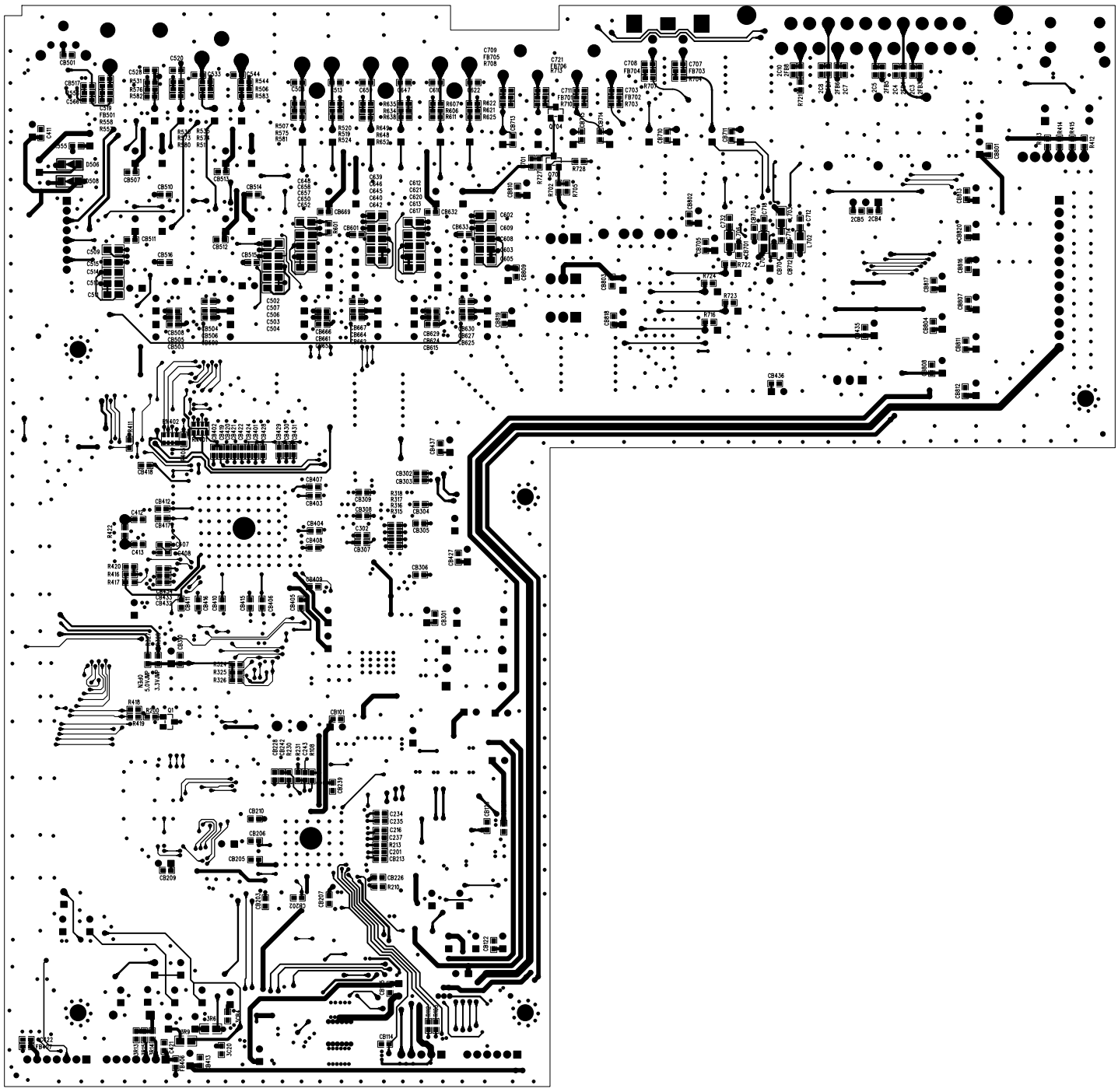

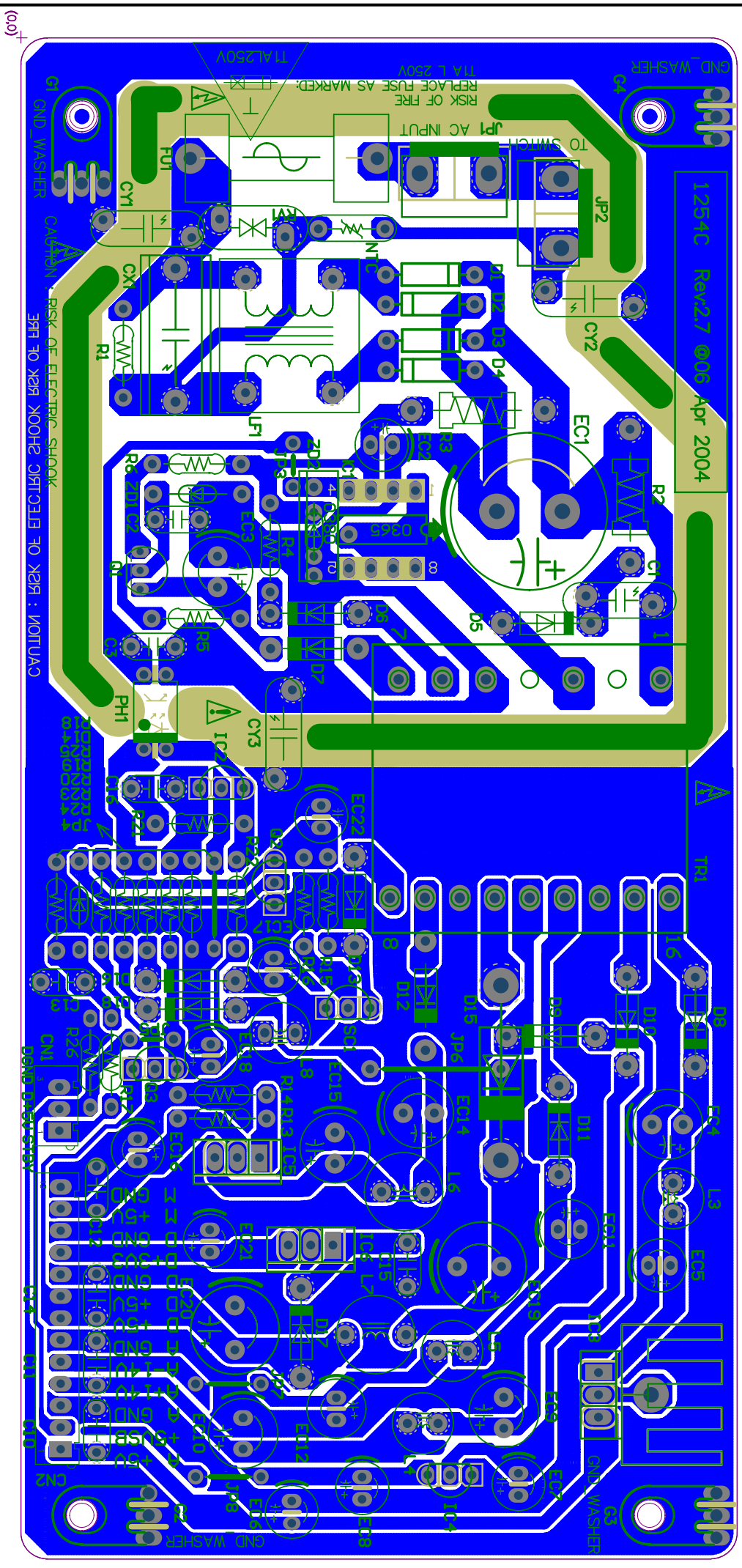
1254C Rev2.7 @06 Apr 2004
CAUTION : RISK OF ELECTRIC SHOCK
RISK OF FIRE
REPLACE FUSE AS MARKED:
T1A L 250V
JP1 AC INPUT
TO SWITCH
GND_WASHER
FU1
CY1
CY2
CY3
JP2
EC1
PH1
TR1

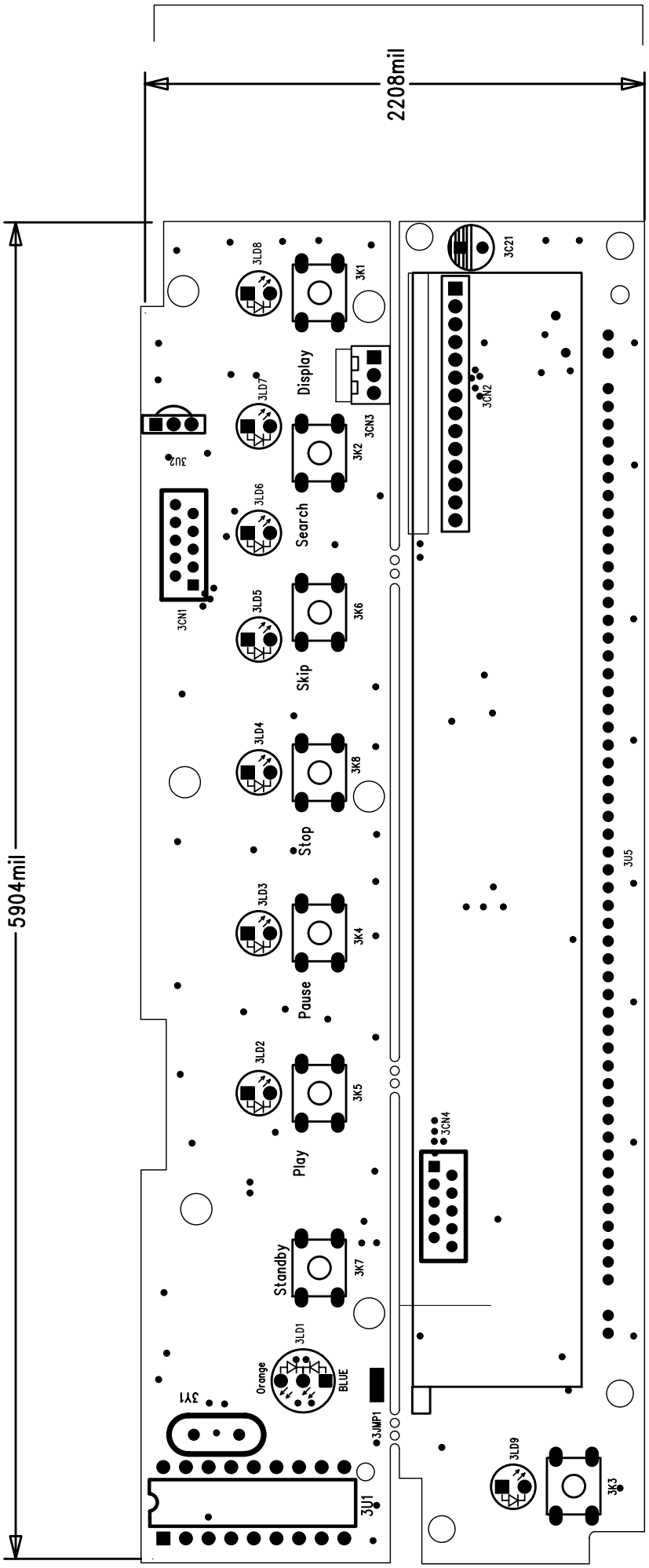

1295C_V2.3@Jul 3,2004.p - Tue Nov 30 20:26:27 2004

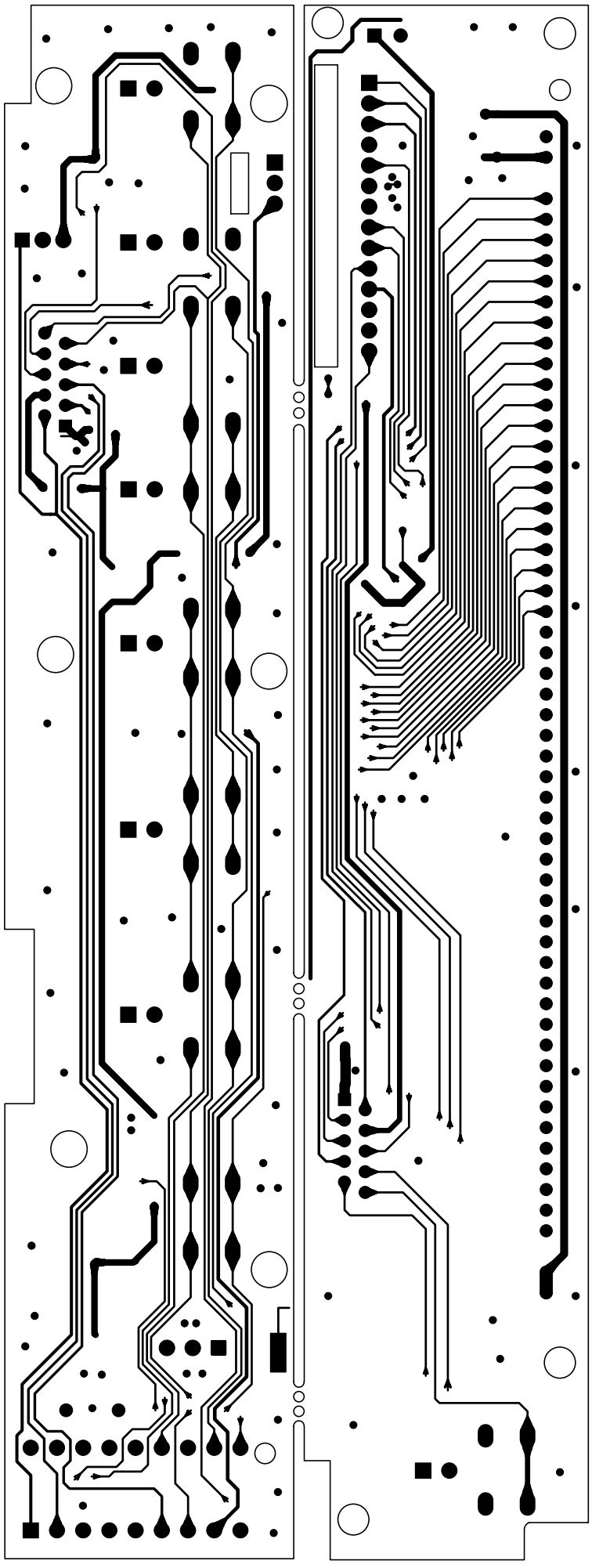

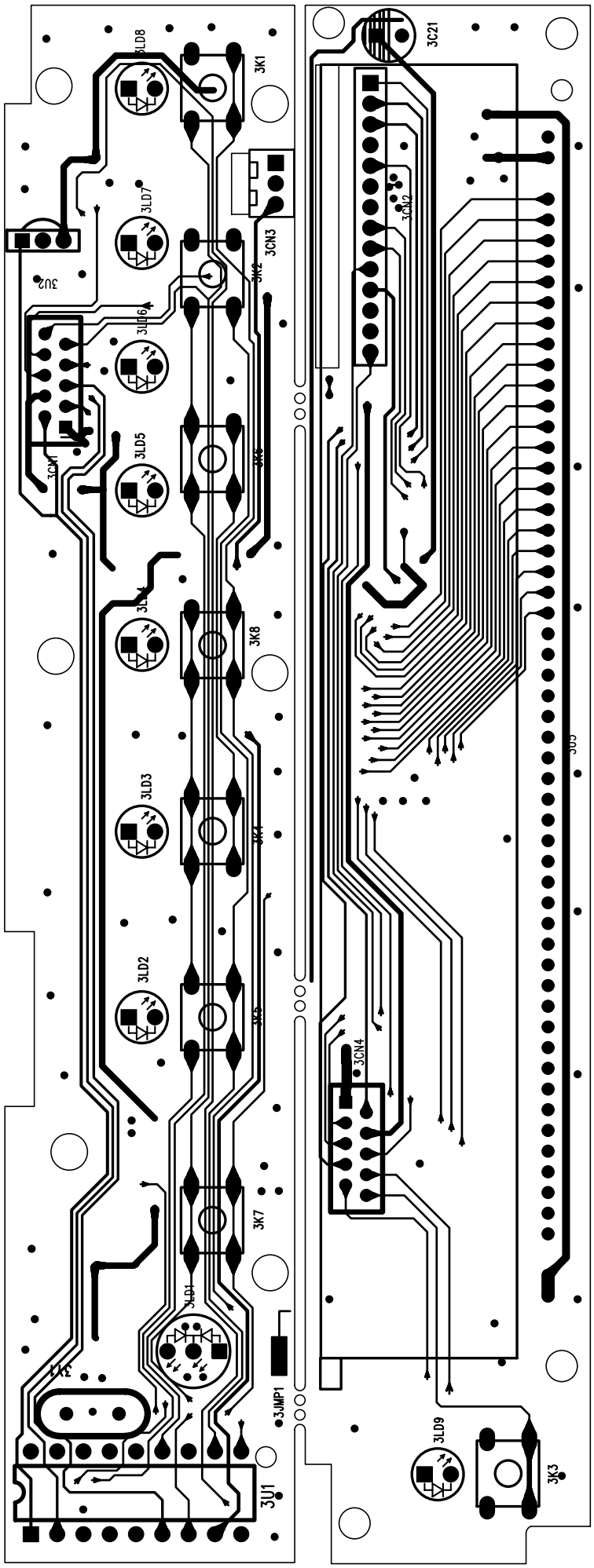
3LD8
3K1
3C21
3LD7
3CN2
3CN3
3K2
3U2
3U6
3LD6
3CN1
3LD5
3K6
3LD4
3K8
3LD3
3K4
3LD2
3K5
3CN4
3K7
3LD1
3U1
3JMP1
3LD9
3K3

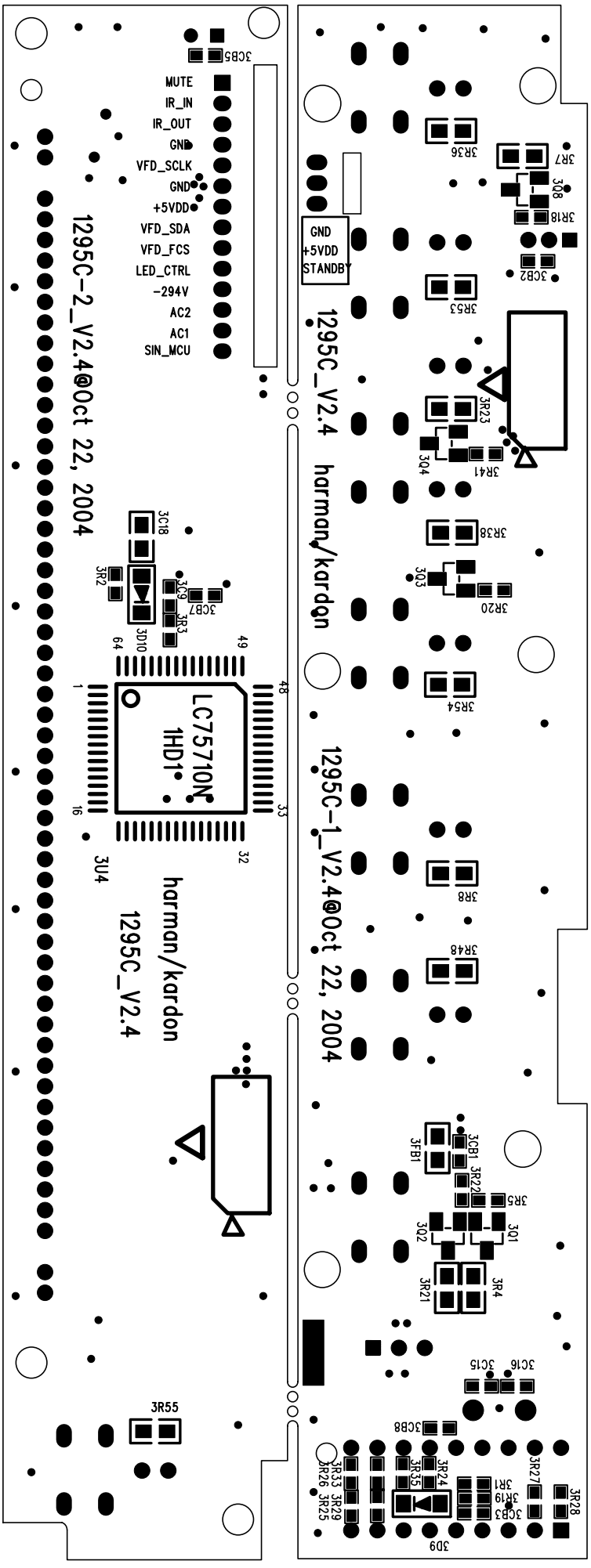
MUTE
IR_IN
IR_OUT
GND
VFD_SCLK
GND
+5VDD
VFD_SDA
VFD_FCS
LED_CTRL
-294V
AC2
AC1
SIN_MCU
1295C-2_V2.4@Oct 22, 2004
GND
+5VDD
STANDBY
1295C_V2.4 harman/kardon
1295C-1_V2.4@Oct 22, 2004
LC75710N
1HD1
3U4
harman/kardon
1295C_V2.4
3R55

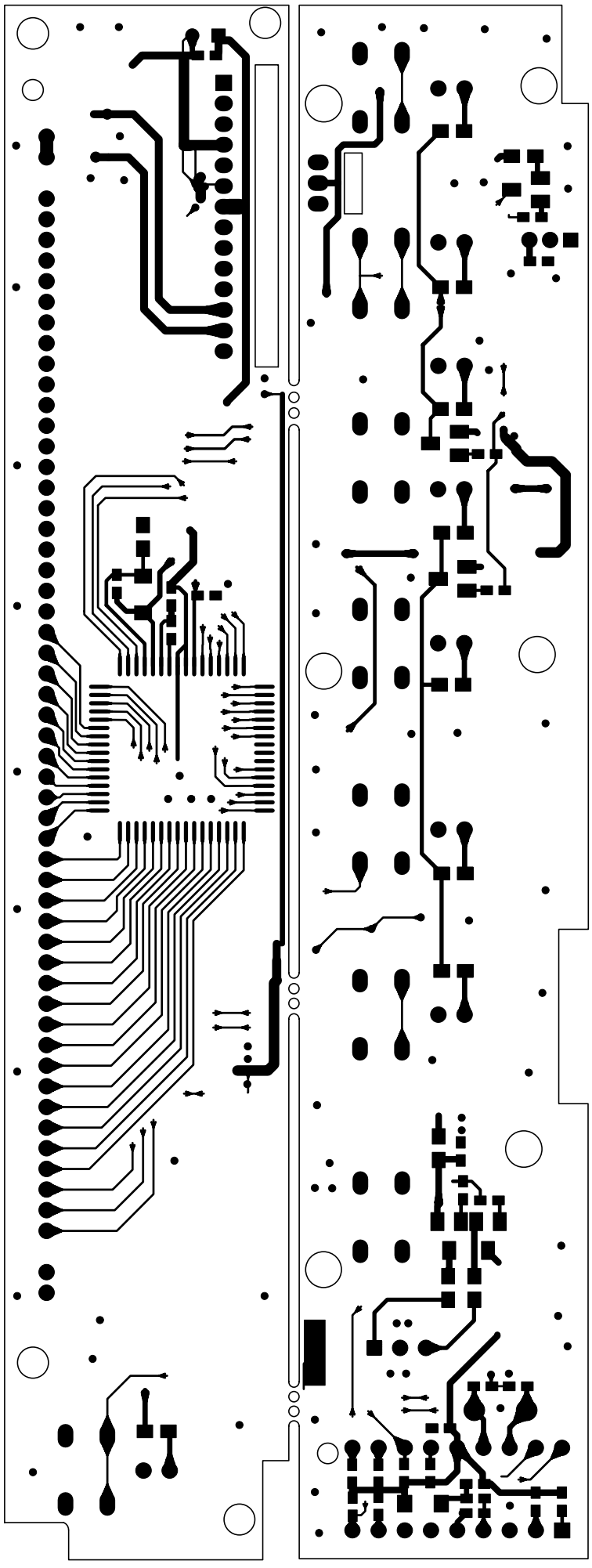

1295C_V2.3@Jul 3,2004.p - Tue Nov 30 21:28:22 2004

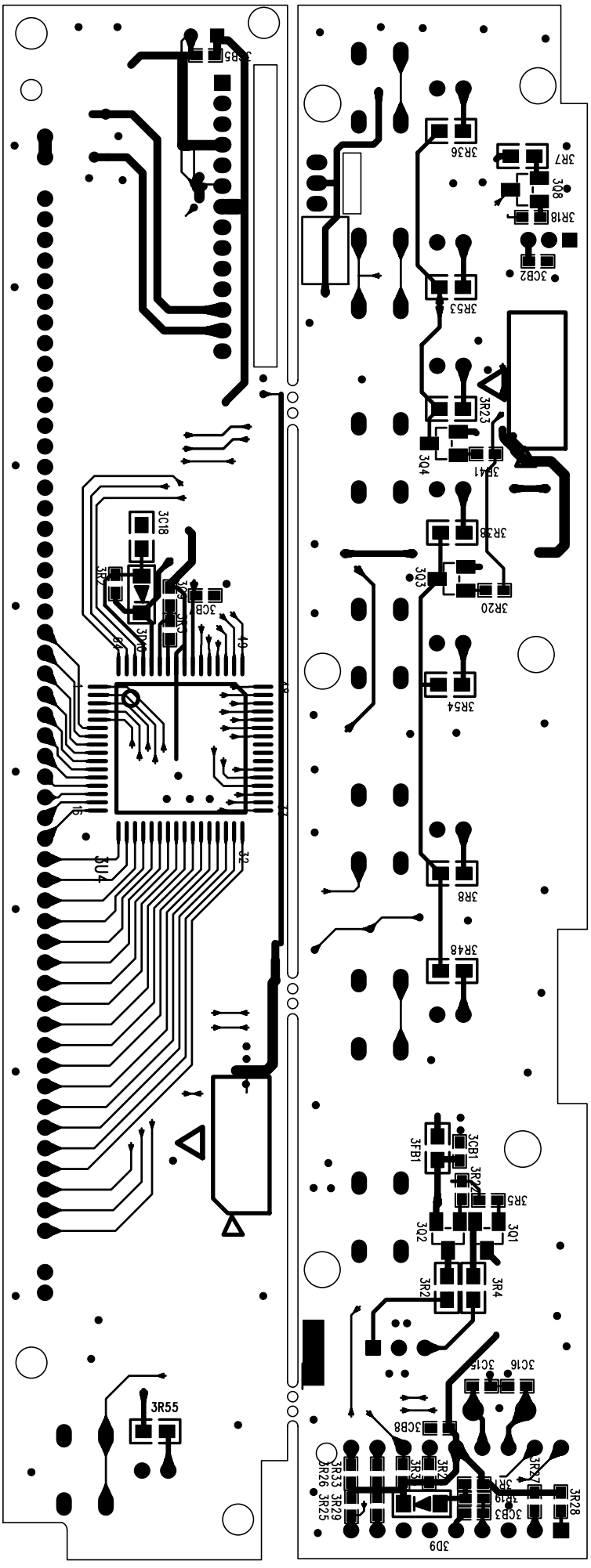

1295C_V2.3@Jul 3,2004.p - Tue Nov 30 21:31:55 2004

LM9022 Display power supply

MSOP, Small Outline, and DIP Package

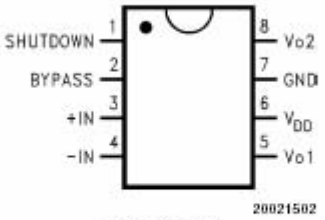

Top View
Order Number LM9022M or LM9022N
See NS Package Number M08A or N08E

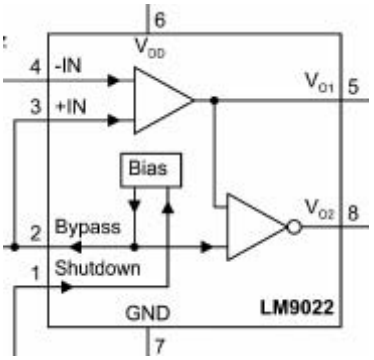

LC75710NE Display driver

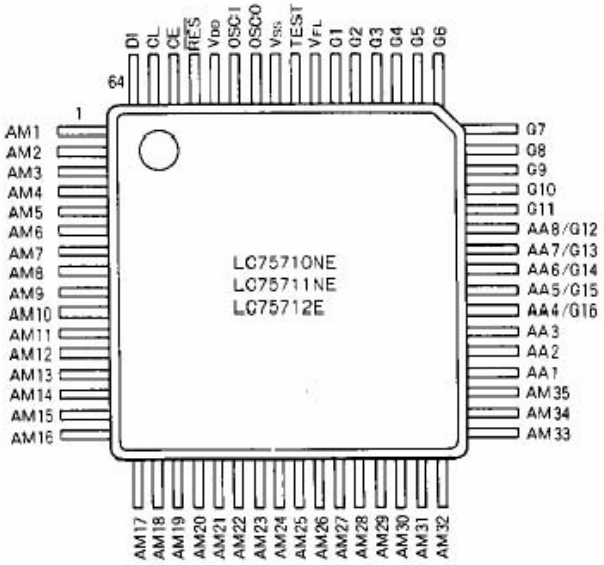

Block Diagram

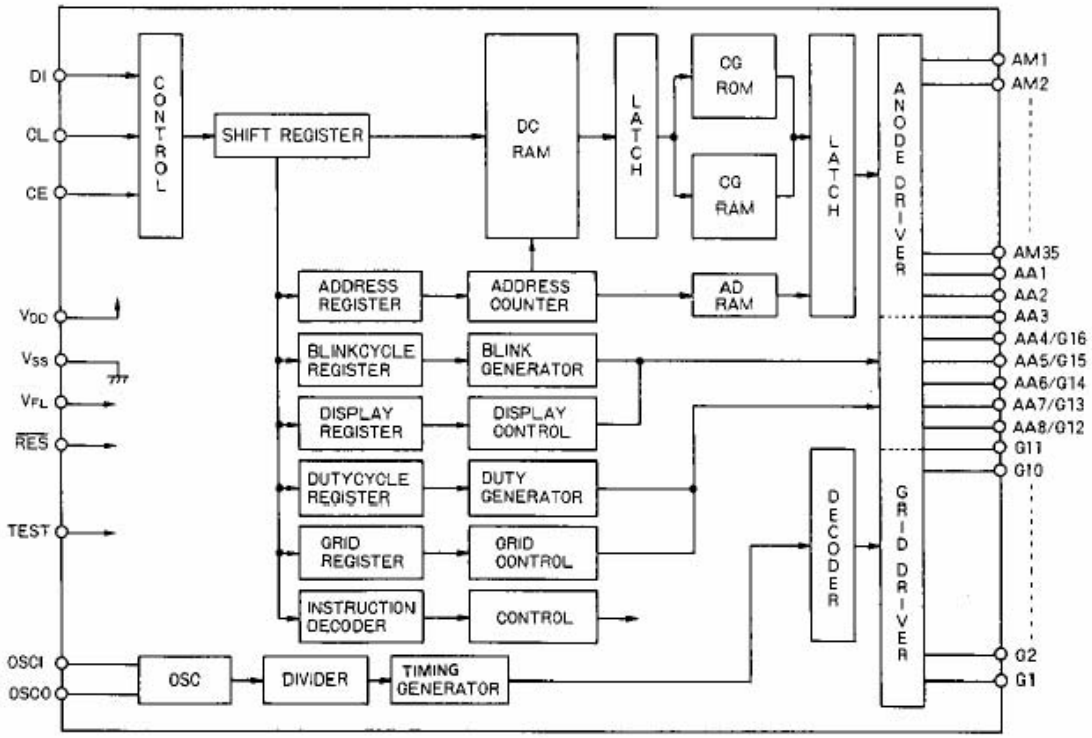

● Block diagram

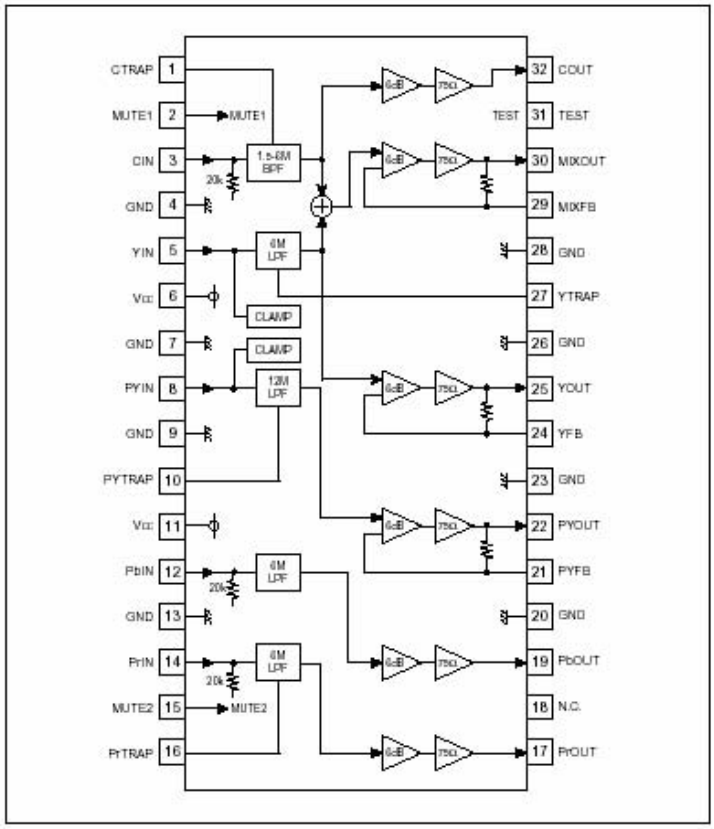

AN8785 MOTOR DRIVER (SERVO)

■ Block Diagram

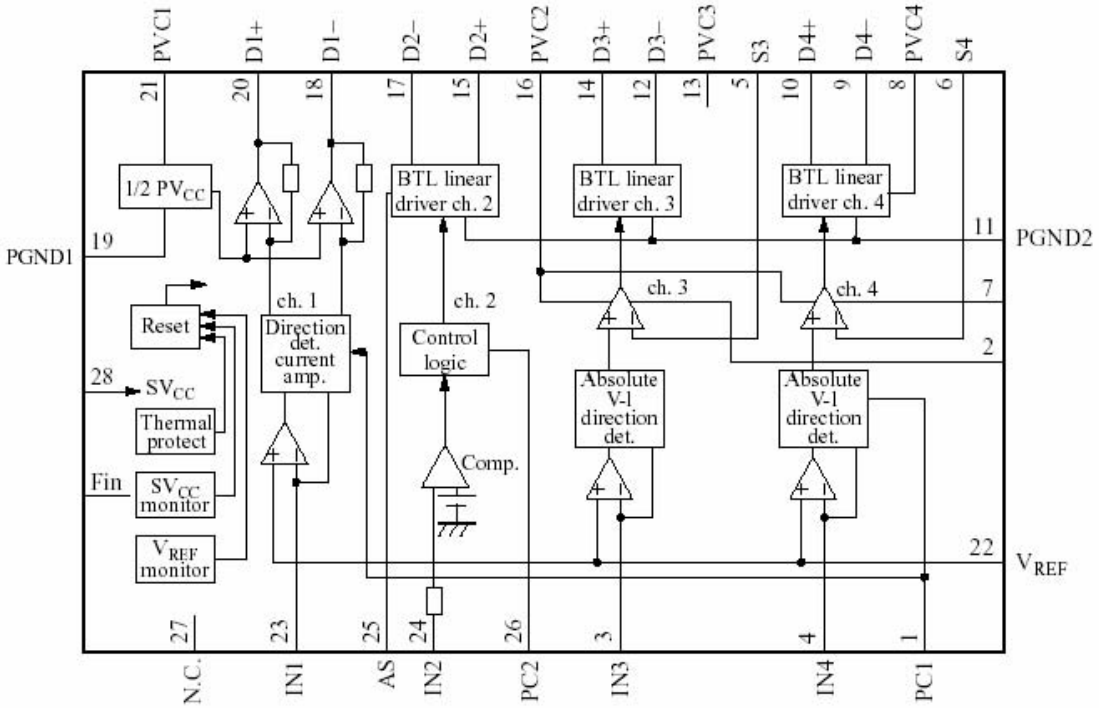

BLOCK DIAGRAM

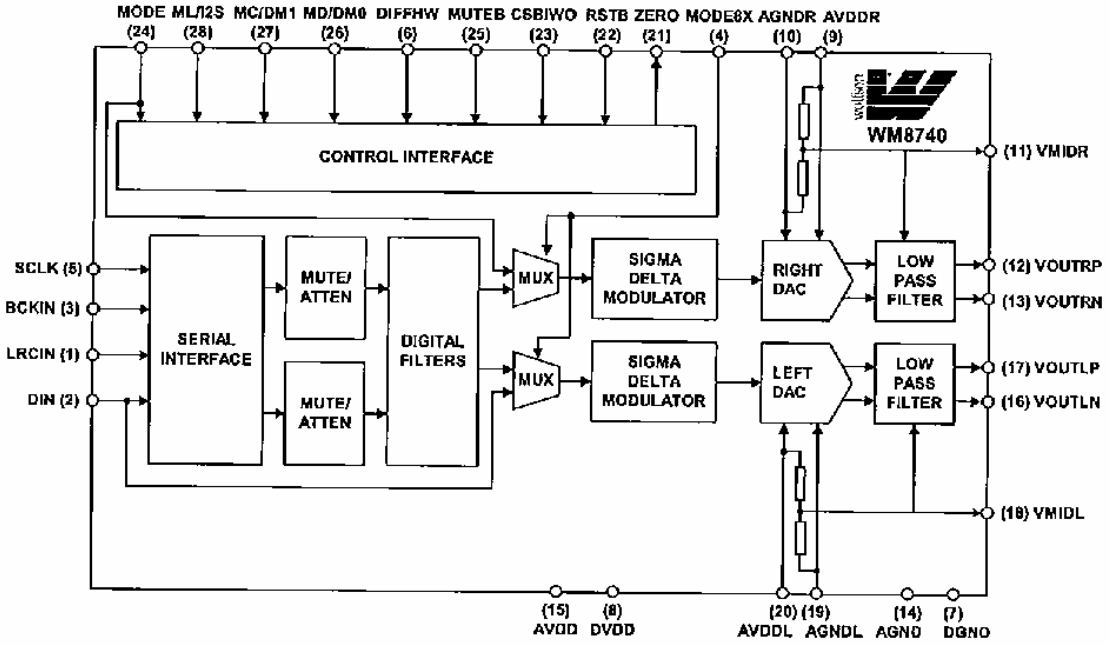

PIN CONFIGURATION

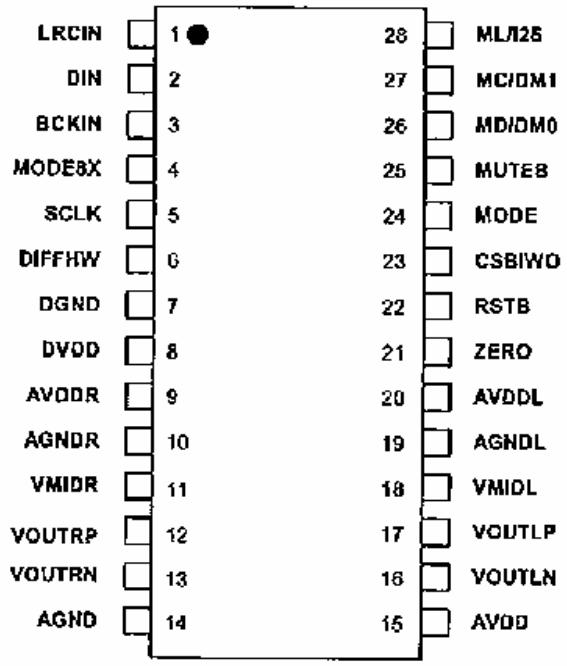

DVD31 EU BLOCK DIAGRAM

DVD31

harman/kardon

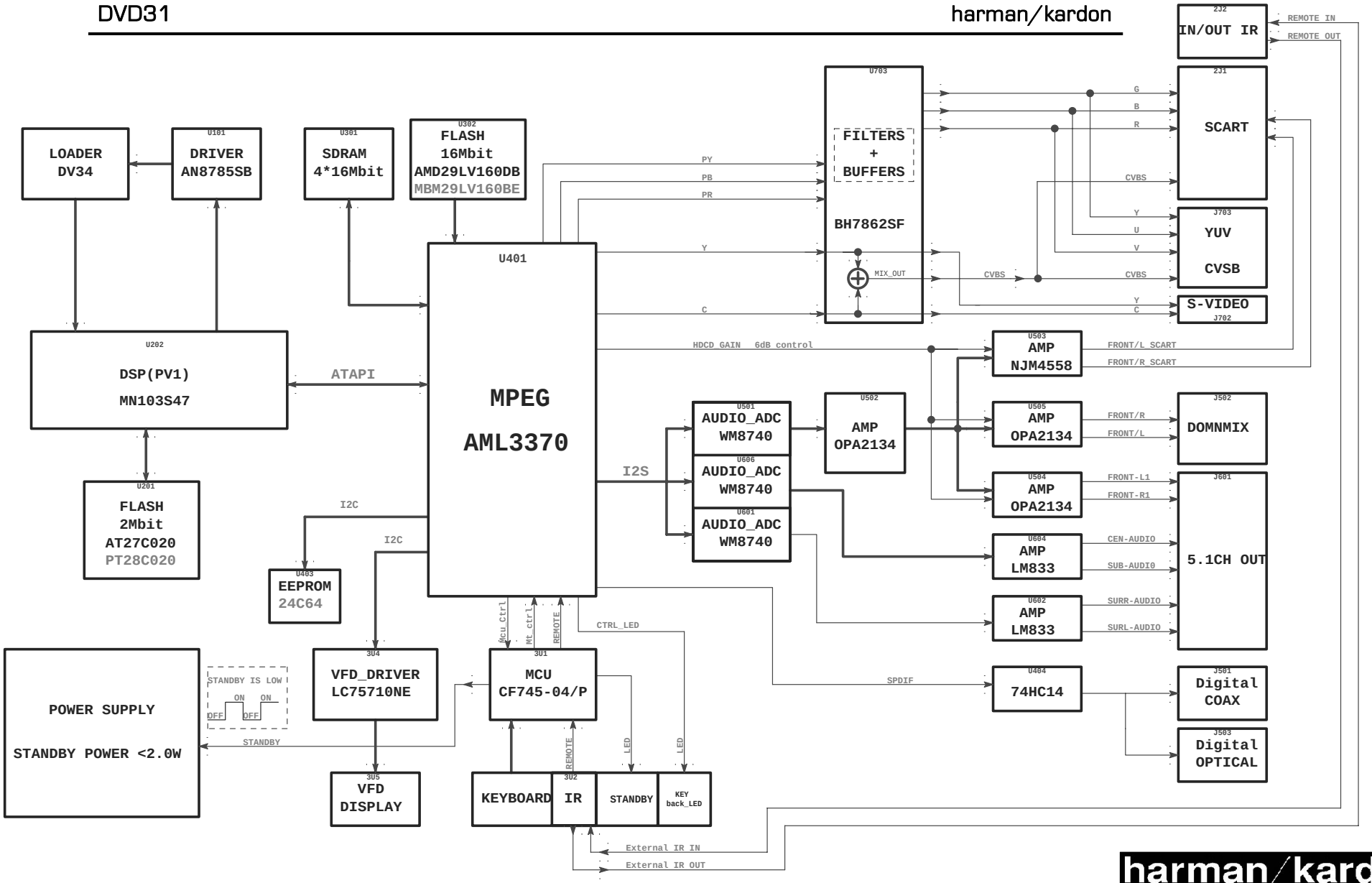

harman/kardon®
Harman Kardon, Northridge, California 91329, USA

Title	DVD31 EU BLOCK DIAGRAM	
Size: Custom	Document Number: 1197	Rev: 3.1.4A
Date: Monday, October 25, 2004	Sheet 1 of 14	

Harman Kardon-DVD 31 US&EU version

SPECIAL NOTES

ALL parts labeled "N/A" are NOT ASSEMBLED.

Print Instructions:
- To create a readable printout, we recommend to use A3 or 11x17" paper size.
- When printing from this PDF file, make sure to check the "Shrink to fit" box.

SYSTEM CONFIGURATION

Module	Configuration	Description
AUDIO	6 channel	DAC : WM8740 3pcs OPAMP : OPA2134 3pcs OPAMP : LM833 2pcs OPAMP : NJM4558 1pcs
	Electrical SPDIF	Connector on board
	Optical SPDIF	Connector on board
VIDEO	CVBS, S-Video YCrCb	Video Buffer : Bh7862 Video Decoder : AML3370
SDRAM	64Mbit (x 16 Bits Wide)	HY57V641620HG OR Equivalent for Mpeg
FLASH	16 Mbit (x 8 Bits Wide)	AMD29VF160BTC-90 or MBM29LV160BE-70 or Equivalent
	2 Mbit (x 8 Bits Wide)	AT27C020-90S or PT28C020 or Equivalent
LOADER	Sanyo DV34	Panasonic Chipset (MN103S47 JRB)

CONFIDENTIAL

THIS DOCUMENT CONTAINS INFORMATION PROPRIETARY TO Hardman/Kardon . USE OR DISCLOSURE WITHOUT WRITTEN PERMISSION IS EXPRESSLY FORBIDDEN.
COPYRIGHT 2004.

harman/kardon®
Harman Kardon, Northridge, California 91329, USA
Title: DVD31 US&EU DIAGRAM
Size: A2 | Document Number: <Doc> | Rev: 3.1.4A
Date: Monday, October 25, 2004 | Sheet 0 of 12

DVD31

harman/kardon

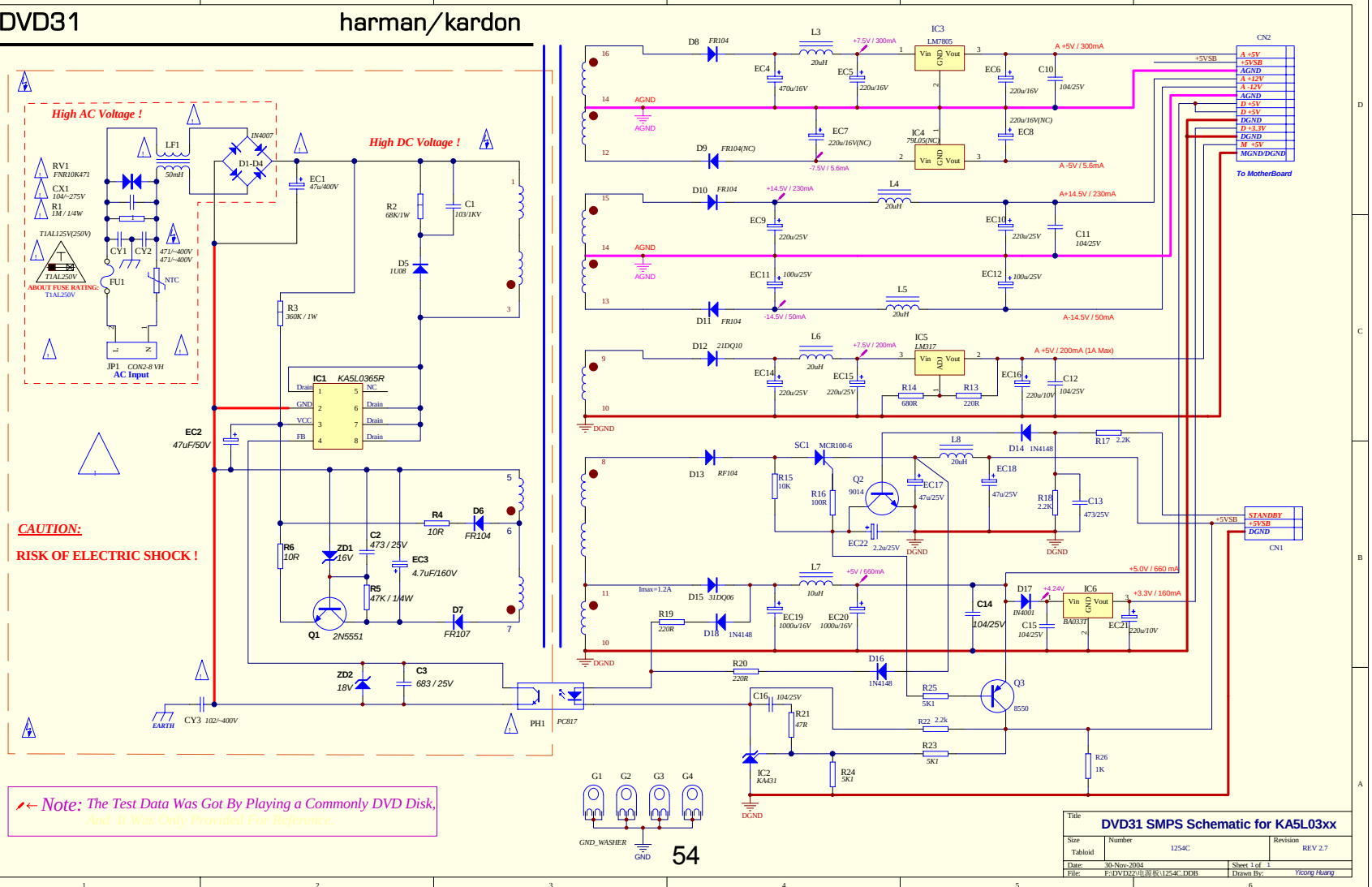

Note: The Test Data Was Got By Playing a Commonly DVD Disk, And It Was Only Provided For Reference.

Title	DVD31 SMPS Schematic for KA5L03xx	
Size: Tabloid	Number: 1254C	Revision: REV 2.7
Date: 30-Nov-2004	Sheet 1 of 1	
File: F:\DVD22\电源板\1254C.DDB	Drawn By: Yicong Huang	

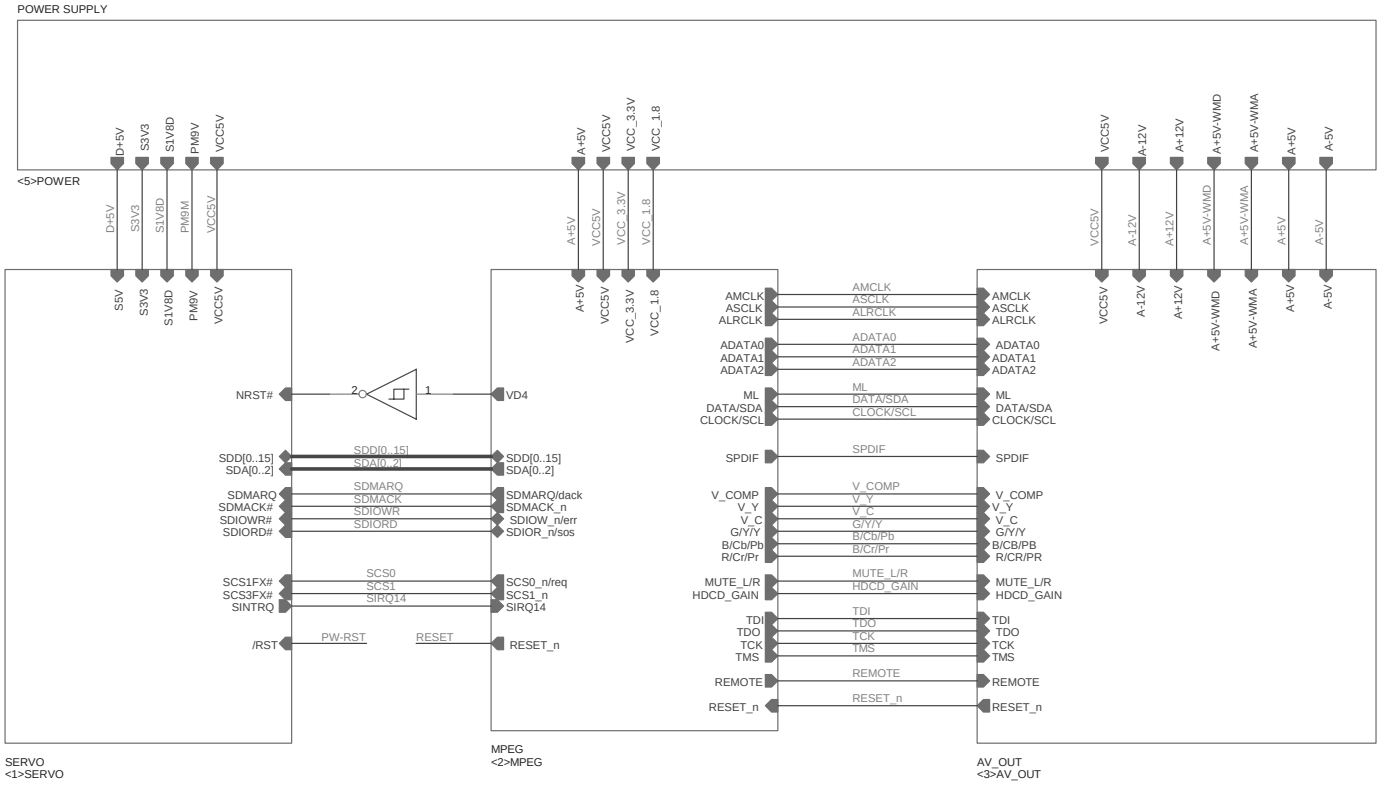

harman/kardon®
Harman Kardon, Northridge, California 91329, USA

Title	DVD31 DIAGRAM	
Size A3	Document Number <Doc>	Rev 3.1.4A
Date: Monday, October 25, 2004	Sheet 2 of 14	

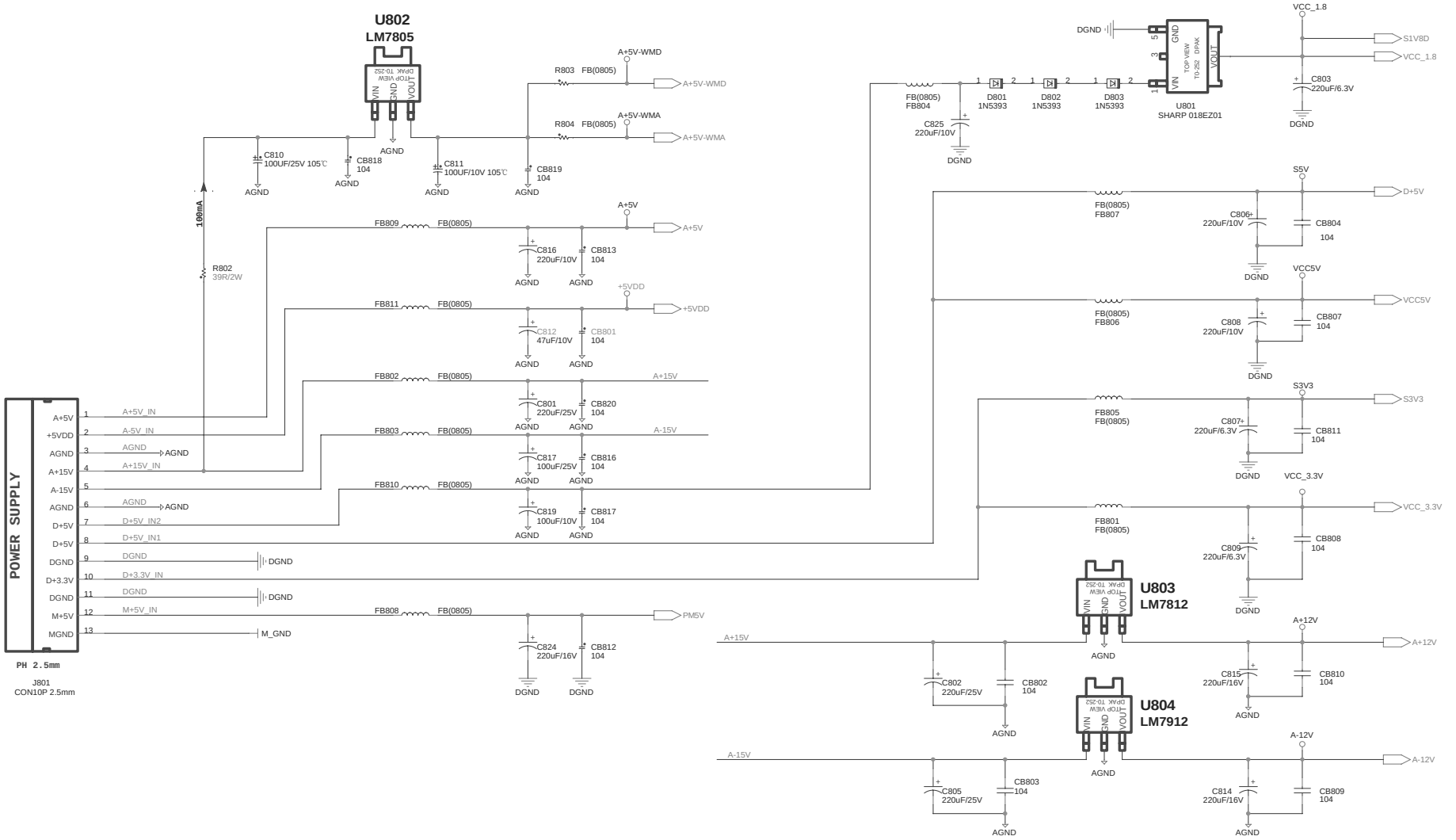

harman/kardon®
Harman Kardon, Northridge, California 91329, USA

Title: DVD31 POWER SUPPLY		
Size: Custom	Document Number: 1197	Rev: 3.1.4A
Date: Monday, October 25, 2004	Sheet 13 of 14	

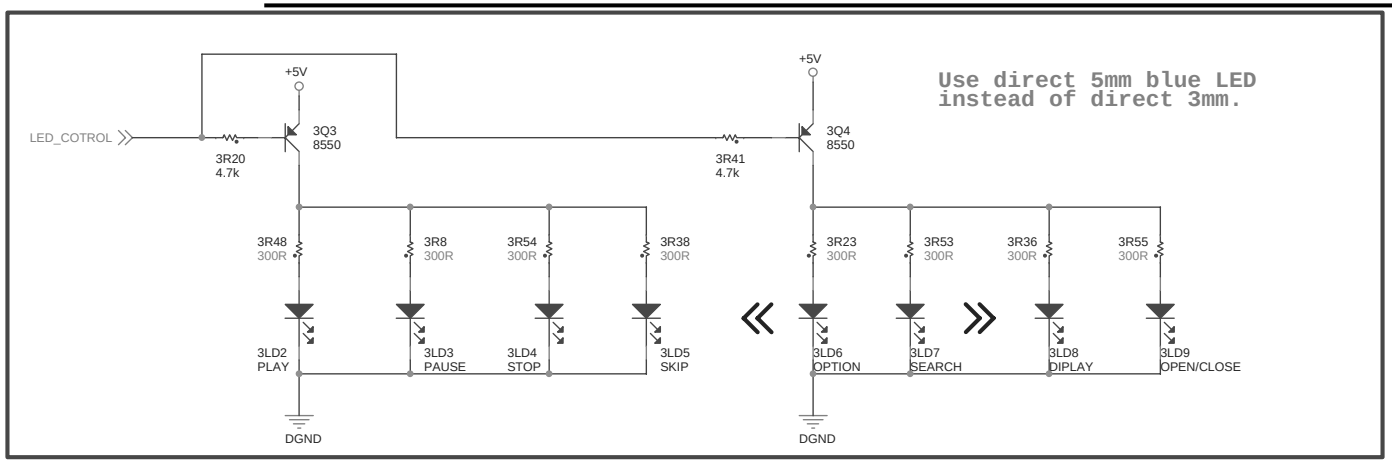

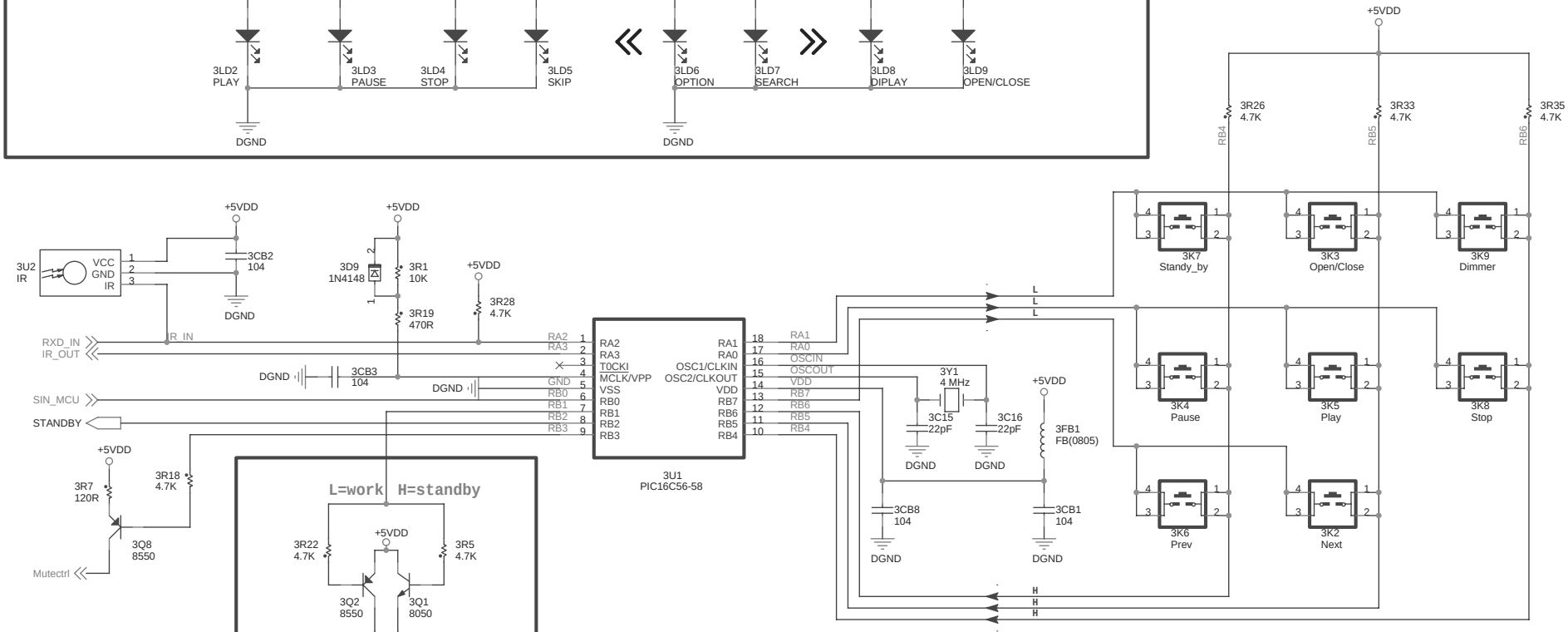

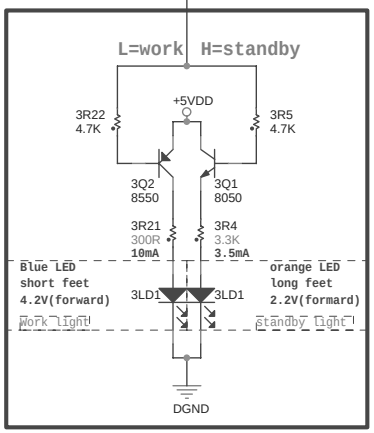

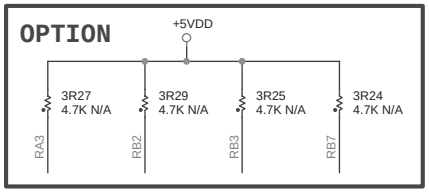

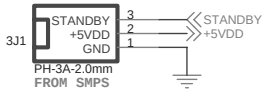

harman/kardon®
Harman Kardon, Northridge, California 91329, USA

Title	DVD31 KEY_SCAN	
Size B	Document Number 1197	Rev 3.1.4A
Date: Monday, October 25, 2004	Sheet 11 of 14	

VFD 5*7 DOT MATRIX

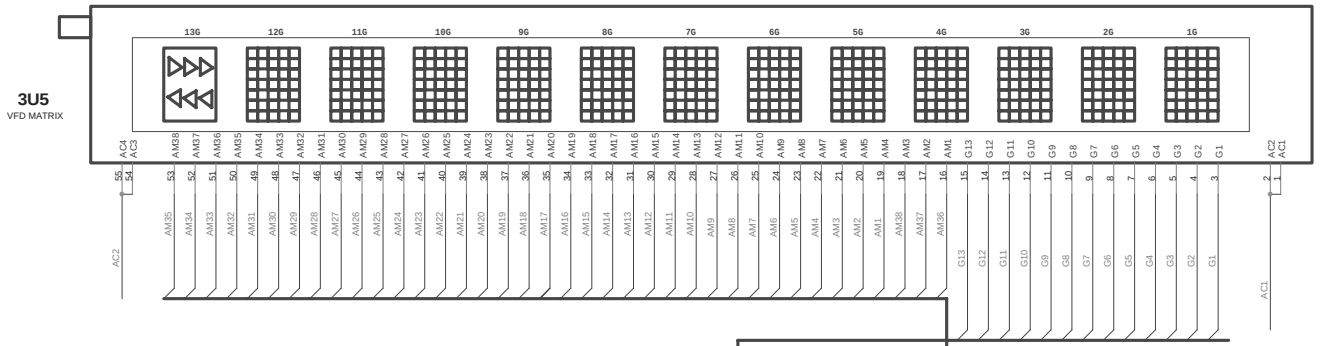

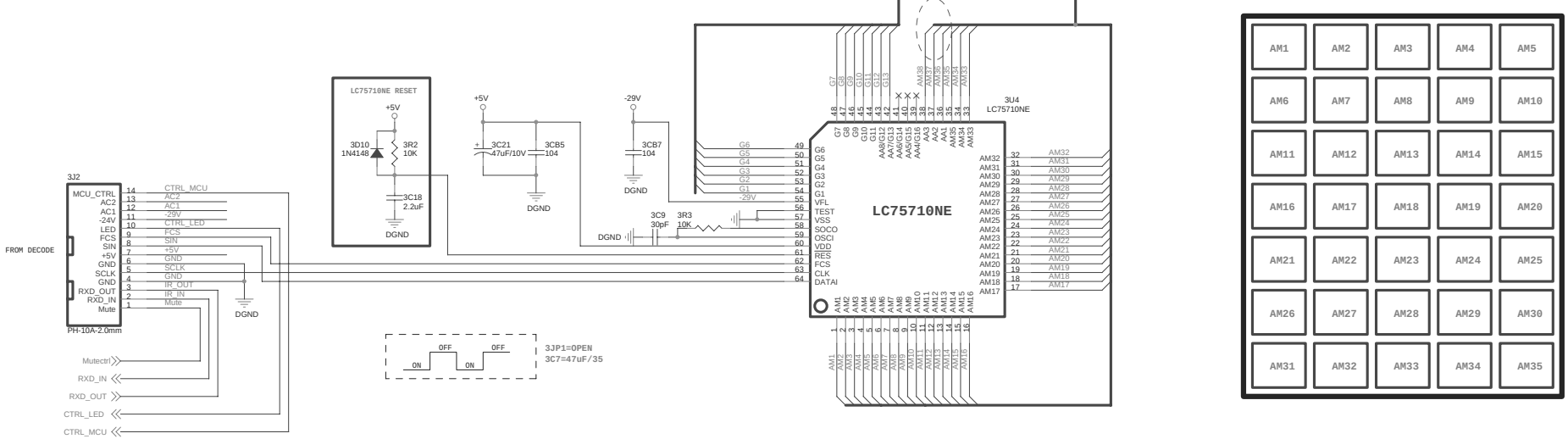

AM1	AM2	AM3	AM4	AM5
AM6	AM7	AM8	AM9	AM10
AM11	AM12	AM13	AM14	AM15
AM16	AM17	AM18	AM19	AM20
AM21	AM22	AM23	AM24	AM25
AM26	AM27	AM28	AM29	AM30
AM31	AM32	AM33	AM34	AM35

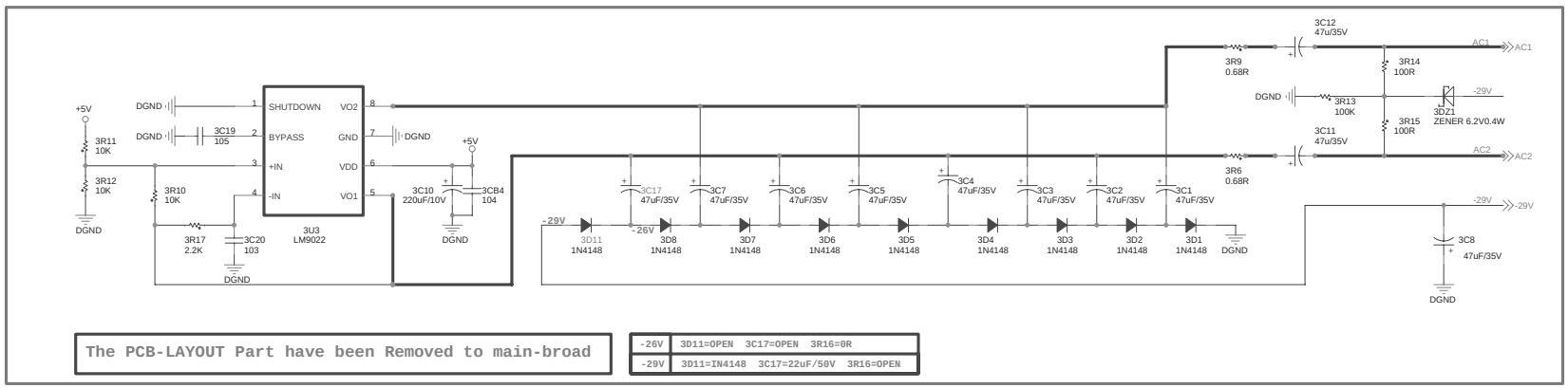

The PCB-LAYOUT Part have been Removed to main-broad

-26V	3D11=OPEN 3C17=OPEN 3R16=0R
-29V	3D11=IN4148 3C17=22uF/50V 3R16=OPEN

harman/kardon
Harman Kardon, Northridge, California 91329, USA

Title: DVD31 VFD_DRIVER		
Size: C	Document Number: 1197	Rev: 3.1.4A
Date: Monday, October 25, 2004	Sheet 12 of 14	

AML3370

U401

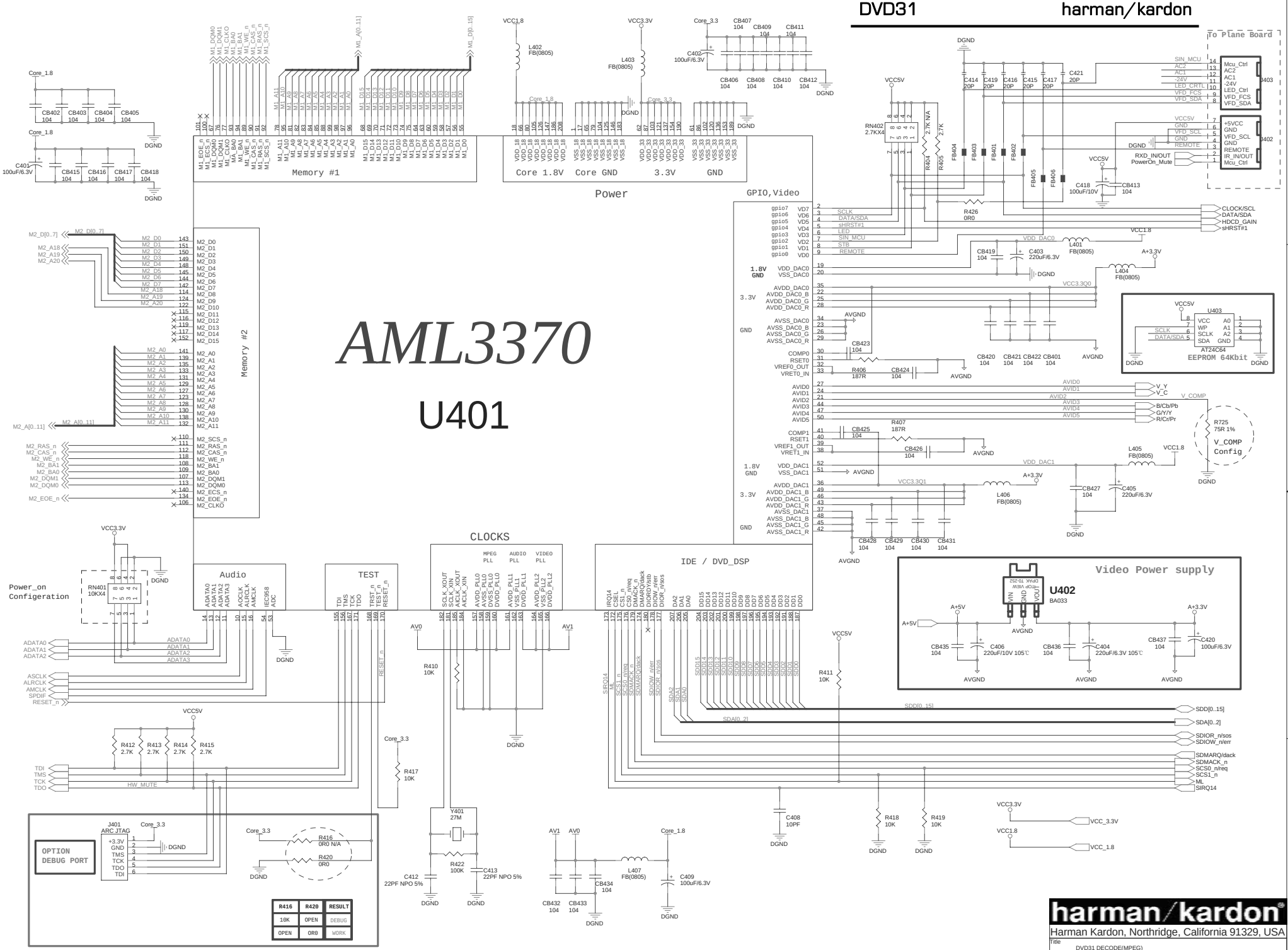

R416	R420	RESULT
10K	OPEN	DEBUG
OPEN	0R0	WORK

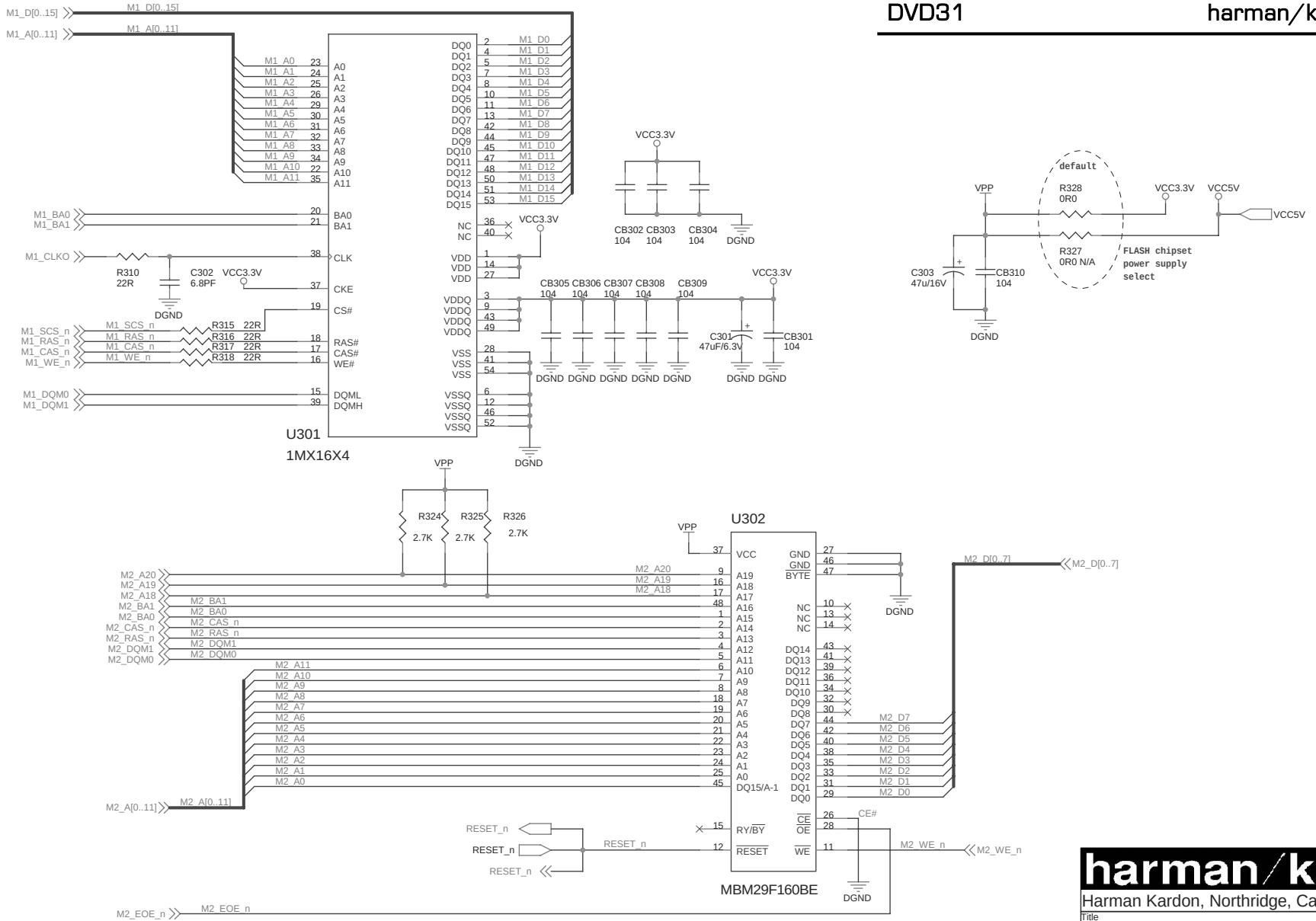

harman/kardon®
Harman Kardon, Northridge, California 91329, USA

Title	DVD31 FLASH/SDRAM	
Size B	Document Number <Doc>	Rev 3.1.4A
Date: Monday, October 25, 2004	Sheet 6 of 14	

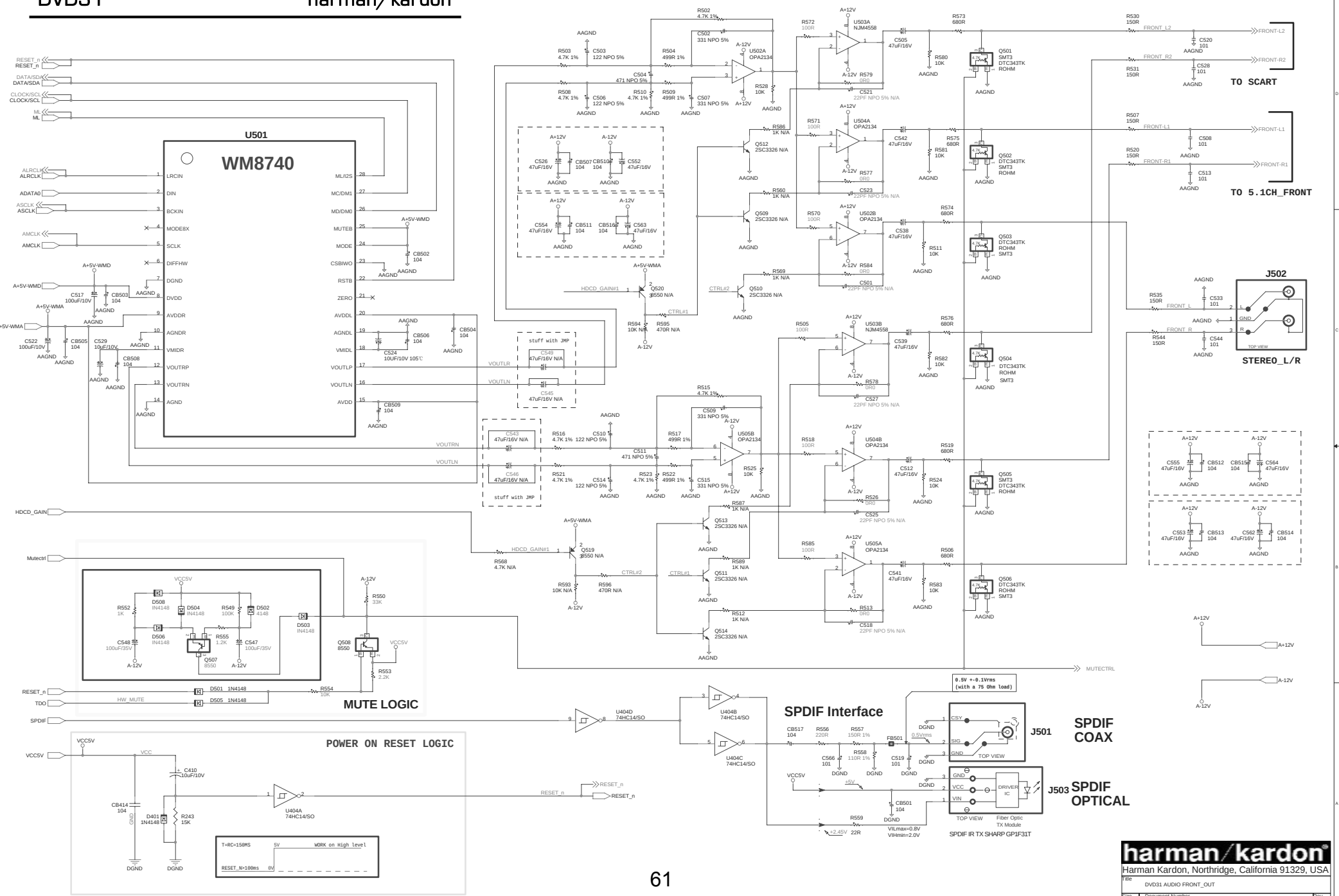

harman/kardon®
Harman Kardon, Northridge, California 91329, USA

Title	DVD31 AUDIO FRONT_OUT	
Size A2	Document Number <Doc>	Rev 0.1.4A
Date: Monday, October 25, 2004	Sheet 7 of 14	

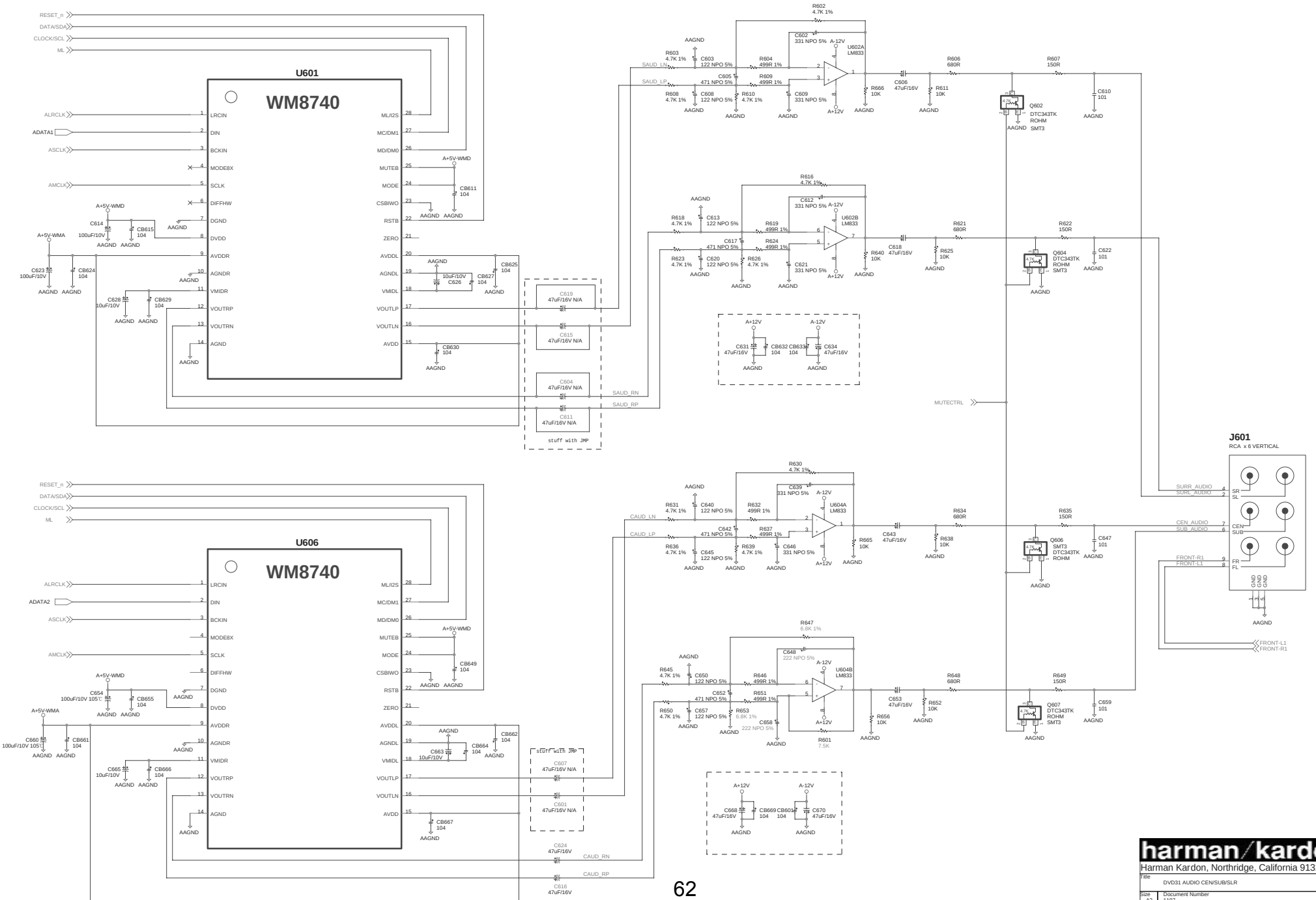

harman/kardon®
Harman Kardon, Northridge, California 91329, USA

Title	DVD31 AUDIO CEN/SUB/SLR	
Size A2	Document Number 1197	Rev 3.1.4A
Date: Monday, October 25, 2004	Sheet 8 of 14	

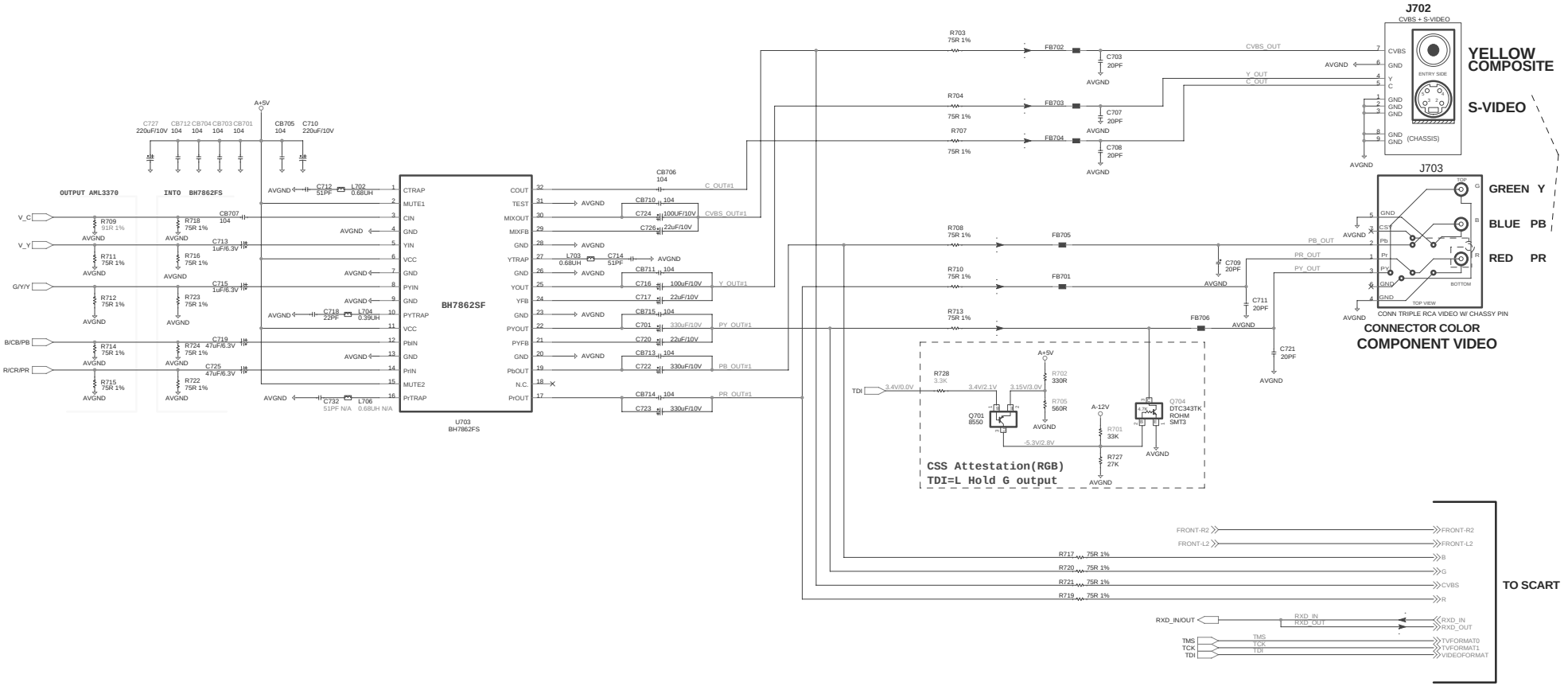

harman/kardon®
Harman Kardon, Northridge, California 91329, USA

Title: DVD31 VIDEO_OUT		
Size: Custom	Document Number: 1197	Rev: 3.1.4A
Date: Monday, October 25, 2004	Sheet 9 of 14	

SCART INTERFACE

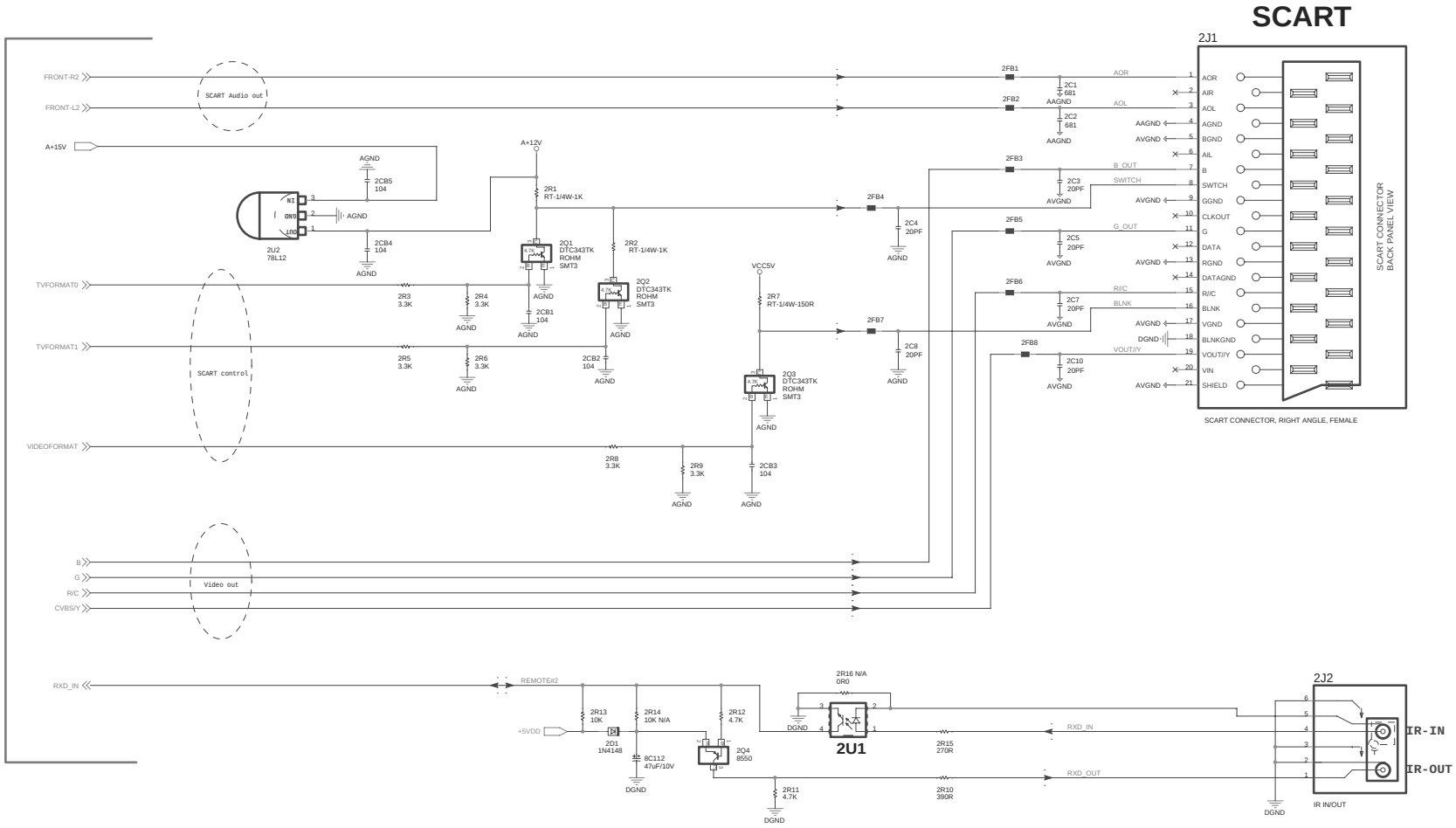

TVFORMAT1(FS1/TCK)	TVFORMAT0(FS0/TMS)	CONTROL VOLTAGE	TV FUNCTION
0	0	~12V	SCART Active Auto Switch to 4:3 Aspect Ratio
0	1	~0V	SCART Inactive (Standby)
1	1	~0V	SCART Inactive (Standby)
1	0	~6V	SCART Active Auto Switch to 16:9 Aspect Ratio

VIDEOFORMAT(TDI)		CONTROL VOLTAGE	
0		1~3V	SCART RGB OUTPUT
1		~0V	START NON-RGB OUTPUT

harman/kardon®
Harman Kardon, Northridge, California 91329, USA
Title: DVD31 SCART_OUT
Size: Custom | Document Number: 1197 | Rev: 3.1.4A
Date: Monday, October 25, 2004 | Sheet 10 of 14

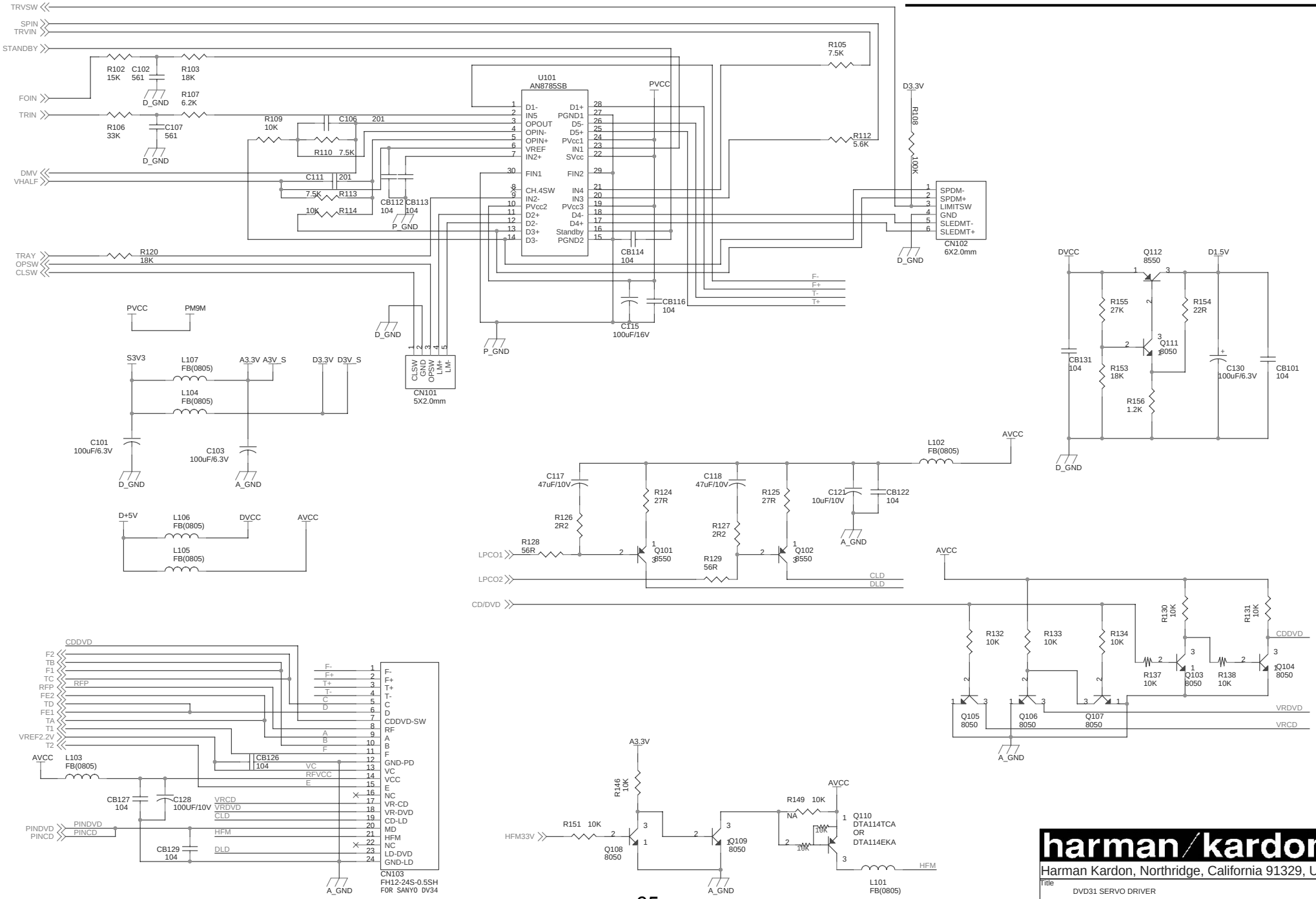

harman/kardon®
Harman Kardon, Northridge, California 91329, USA

Title: DVD31 SERVO DRIVER		
Size: A3	Document Number: 1197	Rev: 3.1.4A
Date: Monday, October 25, 2004	Sheet: 03 of 14	

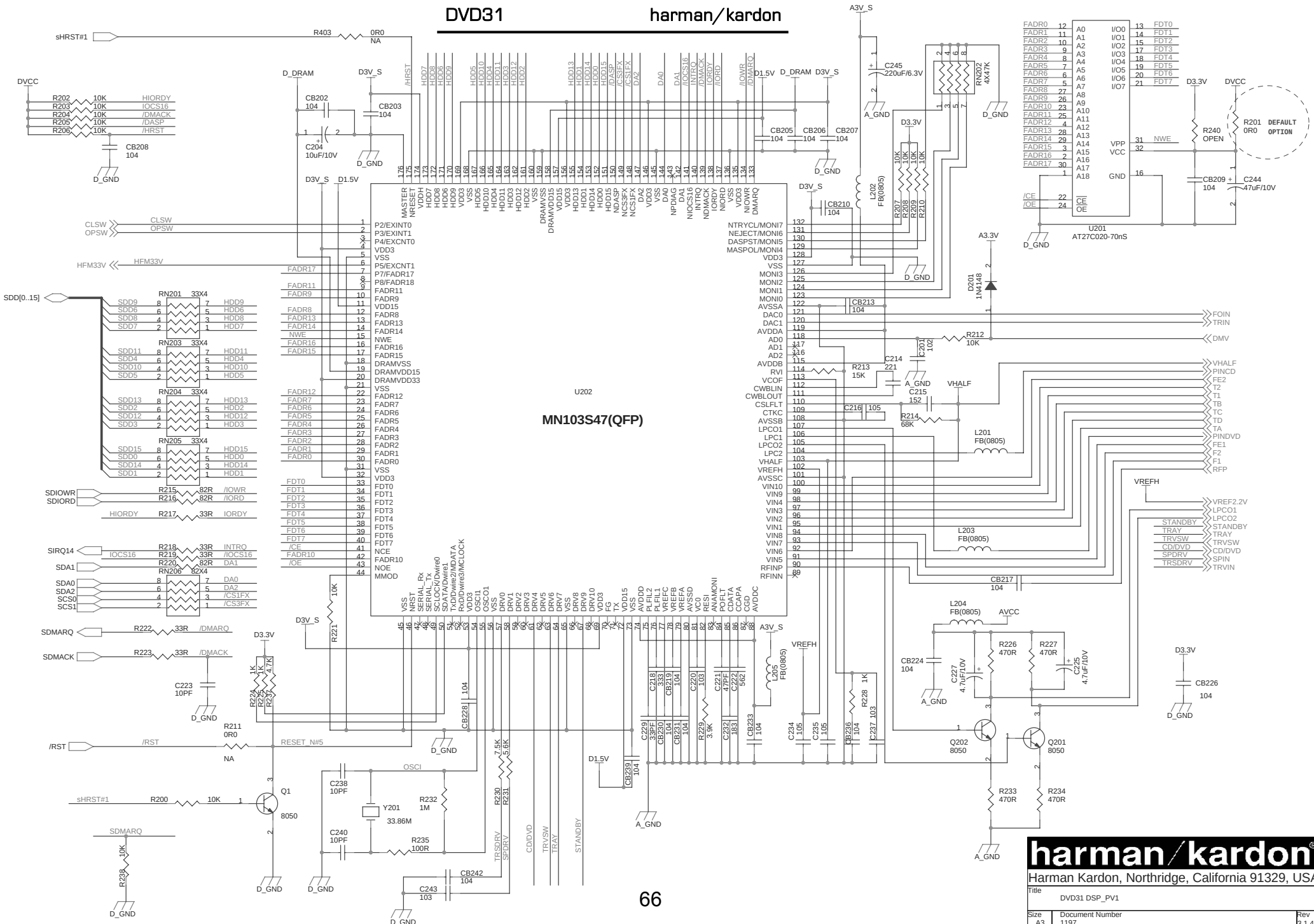

harman/kardon®

Harman Kardon, Northridge, California 91329, USA

Title	DVD31 DSP_PV1	
Size A3	Document Number 1197	Rev 3.1.4A
Date: Monday, October 25, 2004	Sheet 04 of 14	

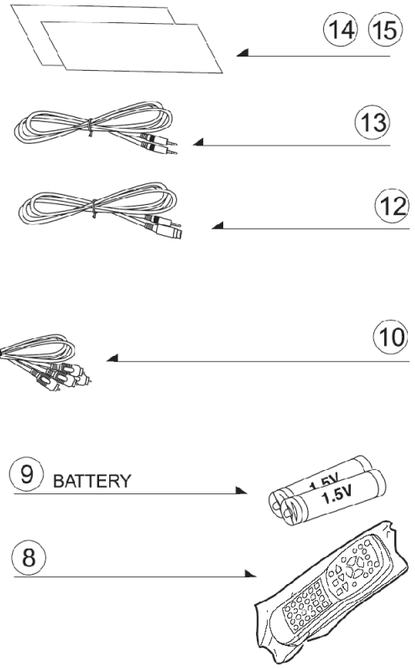

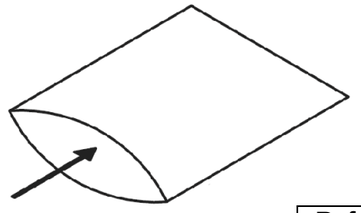

Ref. #	Part Number	Description	Qty
1	DVD31	DVD31 (120v)	1
	DVD31/230	DVD31 (230v)	
	DVD 31CP	DVD31 for CP systems	
2	309-000-PM065-0000	Foam End Pads	1
3		Plastic Bag	1
4	310-000DVD31-0110	DVD31 Outer Carton (120v)	1
	310-000DVD31-0010	DVD31 Outer Carton (230v)	
5	312-AB310000-0010	DVD31 Owner's Manual (120v)	1
	312-AB310000-0000	DVD31 Owner's Manual (230v)	
6		Foam Padding	1
7		Plastic Bag	1
8	555-0DVD31RC-0000	DVD31 Remote Control	1
9		AA 1.5v Batteries	2
10	162-B0001012-0000	A/V Signal Cable	1
11	Not Used		
12	162-C0001012-0000	S-Video Signal Cable	1
13	162-H0001012-0000	Remote IR Input/Output Cable	1
14		Warning Card	1
15	312-KBDVD310-0010	Warranty Card	1

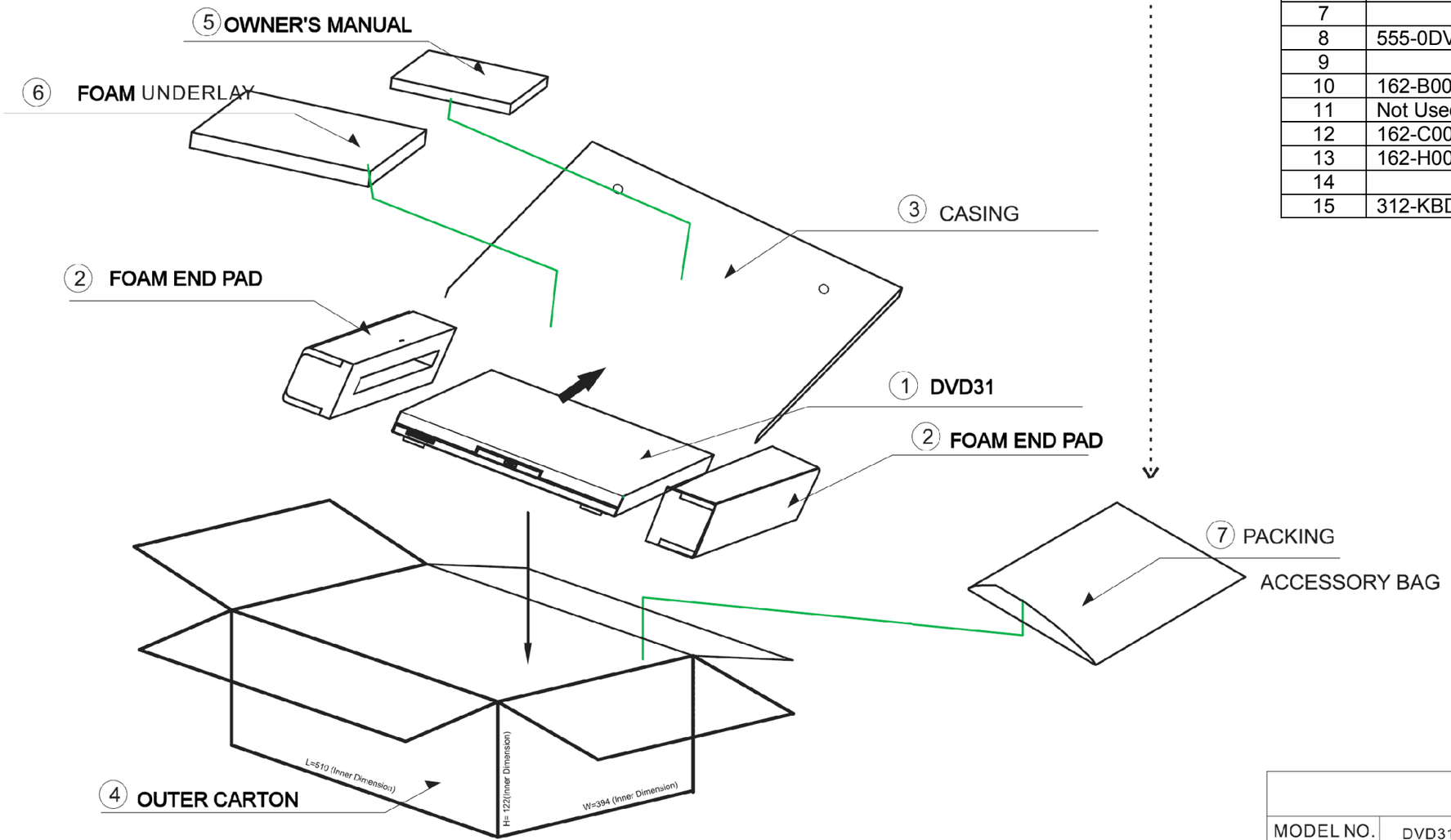

		Name	PACKING
MODEL NO.	DVD31		