The Harman Kardon Model HD300

Manual 109A

COMPACT DISC PLAYER

HD300

Technical Manual

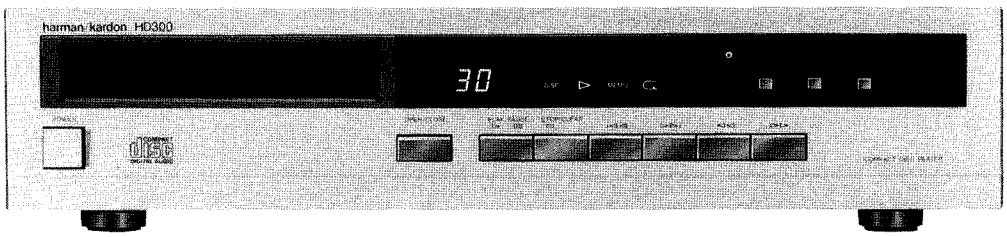

CLASS 1 LASER PRODUCT
Product complies with DHHS rules CFR subchapter J part 1040:10 at date of manufacture.

DANGER—invisible laser radiation when open and interlock failed or defeated. Avoid direct exposure to the beam.

CAUTION—use of all controls, adjustments or performance of procedures other than those specified herein may result in hazardous radiation exposure.

Be Careful of the Laser Pickup

Although you cannot see it from the outside, a laser pickup is located under the disc tray and a precision lens is built in it. Since the laser pickup, including the lens element, is especially sensitive to dust, keep the disc tray closed when not in use. Also do not put your hand inside the unit.

CLASS 1
LASER PRODUCT

harman/kardon
240 Crossways Park West, Woodbury, N.Y. 11797
1112-3152109A3 P-088610 1500 Printed in Japan

TABLE OF CONTENTS

SPECIFICATIONS 2
SAFETY PRECAUTIONS 3
CONTROLS AND FUNCTIONS 5
REMOTE CONTROL 6
DISASSEMBLY PROCEDURES 7
DISASSEMBLING THE CD PLAYER MECHANICAL ASSEMBLY 8
POWER CORD REPLACEMENT 8
BLOCK DIAGRAM 9
ADJUSTMENT PROCEDURE 10
INSTALLATION OF DISC DRAWER AND CLAMPER 16
TROUBLE SHOOTING 17
IC BLOCK DIAGRAM 26
GENERAL UNIT EXPLODED VIEW 28
CD PLAYER MECHANISM EXPLODED VIEW 29
GENERAL UNIT PARTS LIST 30
CD PLAYER MECHANISM PARTS LIST 30
ELECTRICAL PARTS LIST 31
PACKAGE 33
P. C. BOARDS 34
WIRING DIAGRAM 36
SCHEMATIC DIAGRAM 37

SPECIFICATIONS

System	: Compact Disc Digital Audio
Signal Detection	: 3-Beam Semiconductor Laser
Error Correction	: CIRC System
Sampling Frequency (Disc)	: 44.1kHz
D/A Conversion Frequency	: 88.2kHz
Quantization	: 16 Bit Linear
Channels	: 2 Channel Stereo
Frequency Response	: 4Hz—20kHz ±0.5dB
Total Harmonic Distortion	: 0.01% (1kHz)
Dynamic Range	: 100dB
Signal-to-Noise Ratio	: 98dB
Channel Separation	: 80dB (1kHz)
Wow & Flutter	: Immeasurable
Line Output Level/ Load Impedance	: 2.0V/10k Ohms
Power Supply	
General model	: AC 220/240V, 50/60Hz
Canada model	: AC 120V, 60Hz
Power Consumption	: 18 Watts
Dimensions (W × H × D)	: 17-1/2" × 4-1/16" × 11-1/2" (443 × 103 × 285 mm)
Weight	: 10.2lbs. (4.6kg)
Accessories	: Stereo Connecting Cords, Remote Control, AA Battery (×2)

Specifications and components subject to change without notice. Overall performance will be maintained or improved.

Adjustment of this unit requires following measuring instruments and jigs.

- Oscilloscope (3 or more modes, 100MHz, X-Y input possible) 1740A
- Dual Channel Voltmeter (ACVM) MN445B
- Distortion Meter 339A
- Frequency Counter FT-2752
- Optical Power Meter LPM8000
- Jitter Meter MJM-634
- Low Frequency Oscillator (A. F. OSC) 3312A
- Turntable Base Space Jig SJ-300
- Diffraction Grating Screwdriver SD-300
- Test Discs:
  Philips Test Sample 5 814 125-2 (Non-Scratched)
  Philips Test Sample 5A 814 126-2 (Scratched)
  Sony Type III

IMPORTANT

Before plugging the unit in, be sure to remove the transportation screws on the bottom of the unit.

1. Place a cloth under the unit in order to prevent it from being scratched.
2. Turn the unit upside down.
3. Remove the three transportation screws with a screw driver, as shown in the illustration below.

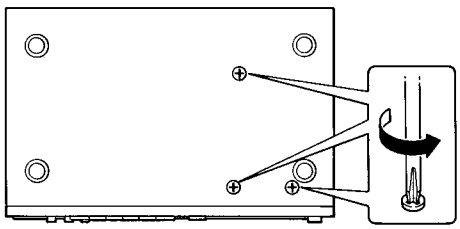

NOTE: Be sure to tighten screws by the reverse procedure before transporting the unit.

SAFETY PRECAUTIONS

Before returning an instrument to the customer, always make a safety check of the entire instrument, including, but not limited to, the following items:

a. Be sure that no built-in protective devices are defective and/or have been defeated during servicing.
   (1) Protective shields are provided to protect both the technician and the customer. Correctly replace all missing protective shields, including any removed for servicing convenience.
   (2) When reinstalling the chassis and/or other assembly in the cabinet, be sure to put back in place all protective devices, including, but not limited to, nonmetallic control knobs, insulating fishpapers, adjustment and compartment covers/shields, and isolation resistor/capacitor networks.
   Do not operate this instrument or permit it to be operated without all protective devices correctly installed and functioning.

b. Be sure that there are no cabinet openings through which an adult or child might be able to insert their fingers and contact a hazardous voltage. Such openings include, both are not limited to, excessively wide cabinet ventilation slots, and an improperly fitted and/or incorrectly secured cabinet back over.

c. **Leakage Current Hot Check**—With the instrument completely reassembled, plug the AC line cord directly into a 120V AC outlet. (Do not use an isolation transformer during this test.) Use a leakage current tester or a metering system that complies with American National Standards Institute (ANSI) C101.1 "Leakage Current for Appliances" and Underwriters Laboratories (UL) 1270, (34.6). With the instrument AC switch first in the ON position and then in the OFF position, measure from a known earth ground (metal waterpipe, conduit, etc.) to all exposed metal parts of the instrument (antennas, handle bracket, metal cabinet, screwheads, metallic overlays, control shafts, etc.), especially any exposed metal parts that offer an electrical return path to the chassis. Any current measured must not exceed 0.5 milliamp. Reverse the instrument power cord plug in the outlet and repeat test. **ANY MEASUREMENTS NOT WITHIN THE LIMITS SPECIFIED HEREIN INDICATE A POTENTIAL SHOCK HAZARD THAT MUST BE ELIMINATED BEFORE RETURNING THE INSTRUMENT TO THE CUSTOMER.**

AC Leakage Test

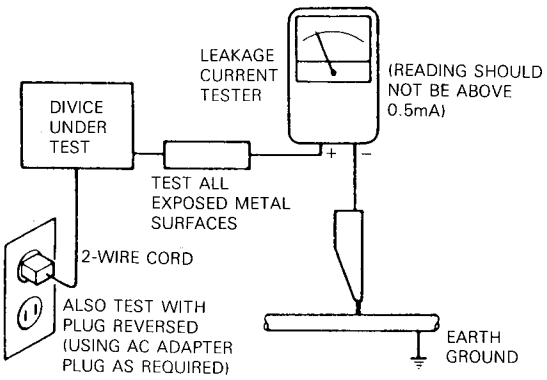

d. **Insulation Resistance Test**
   (1) Unplug the power supply cord and connect a jumper wire between the two prongs of the plug.
   (2) Turn on the power switch of the instrument.
   (3) Measure the resistance with an ohmmeter between the jumpered AC plug and each **exposed metallic** cabinet part on the instrument, such as screwheads, antenna, control shafts, handle brackets, etc. The reading should be as shown below. If it is not within the limits specified, there is the possibility of a shock hazard, and the instrument must be repaired and rechecked before it is returned to the customer.

e. **Insulation Resistance Test Cold Check**
   (1) Unplug the power supply cord and connect a jumper wire between the two prongs of the plug.
   (2) Turn on the power switch of the instrument.
   (3) Measure the resistance with an ohmmeter between the jumpered AC plug and each **exposed metallic** cabinet part on the instrument, such as screwheads, antenna, control shafts, handle brackets, etc. When the exposed metallic part has a return path to the chassis, the reading should be between 1 and 5.2 Megohm. When there is no return path to the chassis, the reading must be "infinite". If it is not within the limits specified, there is the possibility of a shock hazard, and the instrument must be repaired and rechecked before it is returned to the customer.

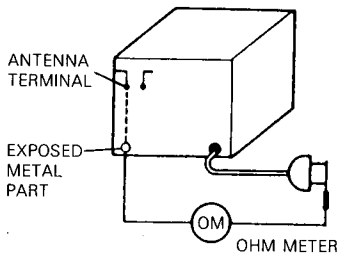

PRODUCT SAFETY NOTICE

Some electrical and mechanical parts have special safety related characteristics which are often not evident from visual inspection, nor can the protection they give necessarily be obtained by replacing them with components rated for higher voltage, wattage, etc. Parts that have special safety characteristics are identified by shading, by (⚠) on schematics and parts listed. Use of a substitute replacement that does not have the same safety characteristics as the recommended replacement part might create shock, fire, and/or other hazards. Products Safety is under review continuously and new instructions are issued whenever appropriate.

SERVICING PRECAUTIONS

CAUTION: Before servicing instruments covered by this manual and its supplements, read and follow the SAFETY PRECAUTIONS on this page.

NOTE: If unforeseen circumstances created conflict between the following servicing precautions and any of the safety precautions, **always follow the safety precautions.** Remember: Safety First.

General Servicing Precautions

a. Always unplug the instrument AC power cord from the AC power source before:
   (1) Removing or reinstalling any component, circuit board, module, or any other instrument assembly.
   (2) Disconnecting or reconnecting any instrument electrical plug or other electrical connection.
   (3) Connecting a test substitute in parallel with an electrolytic capacitor in the instrument.
   Caution: A wrong part substitution or incorrect polarity installation of electrolytic capacitors may result in an explosion hazard.

b. Do **not** defeat any plug/socket B+ voltage interlocks with which instruments covered by this manual might be equipped.

c. Do **not** apply AC power to this instrument and/or any of its electrical assemblies unless all solid-state device heat sinks are correctly installed.

d. Always connect a test instrument's ground lead to the instrument chassis ground before connecting the test instrument positive lead. Always remove the test instrument ground lead last.

NOTE: Refer to Safety Precautions on Page 3.
(1) The service precautions are indicated or printed on the cabinet, chassis or components. When servicing, follow the printed or indicated service precautions and service materials.
(2) The Components used in the unit has a specified conflammability and dielectric strength. When replacing any components, use components which has the same ratings. Components marked (⚠) in the circuit diagram are important for safety or for the characteristics of the unit. Always replace with the appointed components.
(3) An insulation tube or tape is sometimes used and some components are raised above the printed wiring board for safety. The internal wiring is sometimes clamped to prevent contact with heating components. Install them as they were.
(4) After servicing, always check that the removed screws, components and wiring have been installed correctly and that the portion around the service part have not been damaged and so on. Further check the insulation between the blades of attachment plug and accessible conductive parts.

Insulation Checking Procedure

Disconnect the attachment plug from the AC outlet and turn the power on. Connect the insulation resistance meter (500V) to the blades of the attachment plug. The insulation resistance between the each blade of the attachment plug and accessible conductive parts (Note 1) should be more than 1M-ohm.

Note 1: Accessible Conductive Parts including Metal panels, Output jacks, etc.

ELECTROSTATICALLY SENSITIVE (ES) DEVICES

Some semiconductor (solid state) devices can be damaged easily by static electricity. Such components commonly are called Electrostatically Sensitive (ES) Devices. Examples of typical ES devices are integrated circuits and some field-effect transistors and semiconductor "chip" components. The following techniques should be used to help reduce the incidence of component damage caused by static electricity.

1. Immediately before handling any semiconductor component or semiconductor-equipped assembly, drain off any electrostatic charge on your body by touching a known earth ground. Alternatively, obtain and wear a commercially available discharging wrist strap device, which should be removed for potential shock reasons prior to applying power to the unit under test.
2. After removing an electrical assembly equipped with ES devices, place the assembly on a conductive surface such as aluminum foil, to prevent electrostatic charge buildup or exposure of the assembly.
3. Use only a grounded-tip soldering iron to solder or unsolder ES devices.
4. Use only an anti-static solder removal device. Some solder removal devices not classified as "anti-static" can generate electrical charges sufficient to damage ES devices.
5. Do not use freon-propelled chemicals. These can generate electrical charge sufficient to damage ES devices.
6. Do not remove a replacement ES device from its protective package until immediately before you are ready to install it. (Most replacement ES devices are packaged with leads electrically shorted together by conductive foam, aluminum foil or comparable conductive material).
7. Immediately before removing the protective material from the leads of a replacement ES device, touch the protective material to the chassis or circuit assembly into which the device will be installed.
   CAUTION: Be sure no power is applied to the chassis or circuit, and observe all other safety precautions.
8. Minimize bodily motions when handling unpackaged replacement ES devices. (Otherwise harmless motion such as the brushing together of your clothes fabric or the lifting of your foot from a carpeted floor can generate static electricity sufficient to damage an ES device).

CONTROLS AND FUNCTIONS

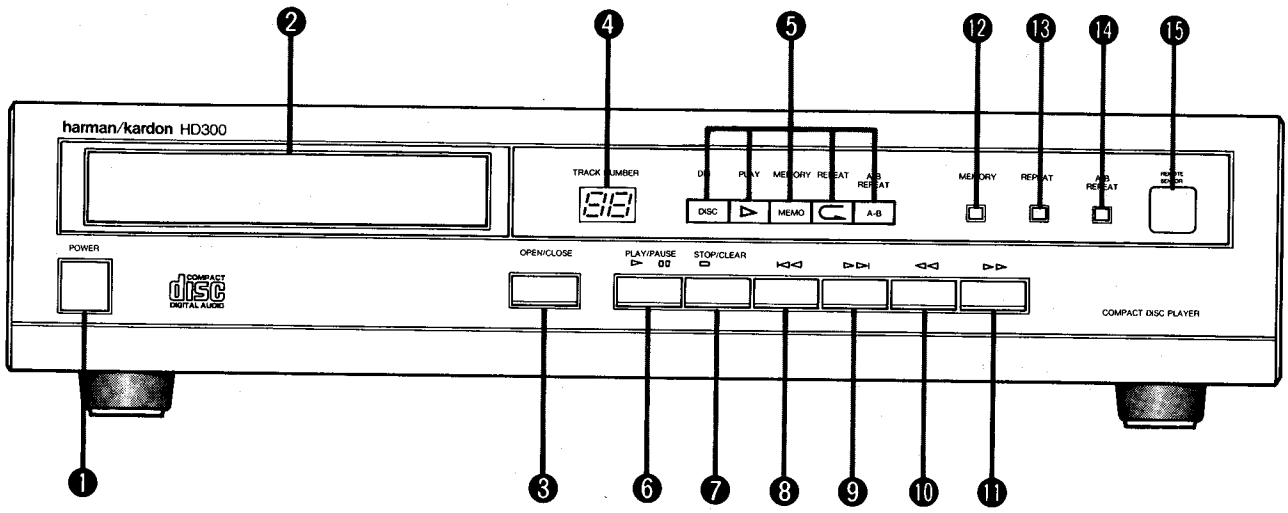

❶ POWER SWITCH
Pressing this switch will turn on the power. Press the switch again to turn the power off.

❷ DISC TRAY
By pressing the "OPEN/CLOSE" button, the tray onto which the discs are loaded will slide out.

❸ OPEN/CLOSE BUTTON
Press this button to open or close the DISC TRAY. Press it once to make the DISC TRAY slide out, and again to make the DISC TRAY slide in.

❹ TRACK NUMBER DISPLAY
Displays the track number of the song being played or the song entered in the memory. Blinks during selection.

❺ FUNCTION DISPLAY

DISC : Flashes when DISC TRAY is opened or closed. The indicator will light up when the disc has been correctly loaded and the unit is in the standby mode. It will continue to be lit during playback.

▷ : Lights up during playback, blinks when in pause, goes out when in stop.

MEMO : Lights during memory playback, blinks when in memory programming.

⊂ : Lights when repeat playback has been programmed.

A-B : Lights during repetition of one section of the disc.

❻ PLAY/PAUSE BUTTON
Press this button to start playback. Pressing this button during playback activates the pause mode. Playback continues when this button is pressed again.

❼ STOP/CLEAR BUTTON
Press this button to stop playing a disc or to cancel the pause mode. Press the button once again to erase the memory program.

❽ ⏮ BUTTON (PROGRAM SELECTION)
Pressing this button once skips playback backward to the beginning of the present program. Pressing it once more skips it to the beginning of the previous program, pressing it twice skips it to the beginning of the program before that, and so on.

❾ ⏭ BUTTON (PROGRAM SELECTION)
Pressing this button once skips playback forward to the beginning of the next program. Pressing it twice skips it to the beginning of the program after that, and so on.

❿ ◁◁ BUTTON (REVERSE)
Pressing this button starts low speed reverse. Holding the button down longer than two seconds changes the reverse mode to high speed. Sound can be heard at a reduced level in this mode.

⓫ ▷▷ BUTTON (FAST-FORWARD)
Pressing this button starts low speed fast-forwarding. Holding the button down longer than two seconds changes the fast-forward mode to high speed. Sound can be heard at a reduced level in this mode.

⓬ MEMORY BUTTON
Used to program the memory for non-sequential playback of disc tracks. Up to 15 program selections can be stored in the memory.

⓭ REPEAT BUTTON
Pressing this button enables continuous repeat playback of the disc. Pressing this button again disables the repeat playback mode. Pressing this button while in memory playback repeats the programs stored in the memory.

⓮ A-B REPEAT BUTTON
Pressing this button while in playback marks the start position for the repeat function. Pressing it again marks the finish position and restarts the playback from the start position.

⓯ REMOTE CONTROL SENSOR
Receives signals from the supplied remote control unit.

REMOTE CONTROL

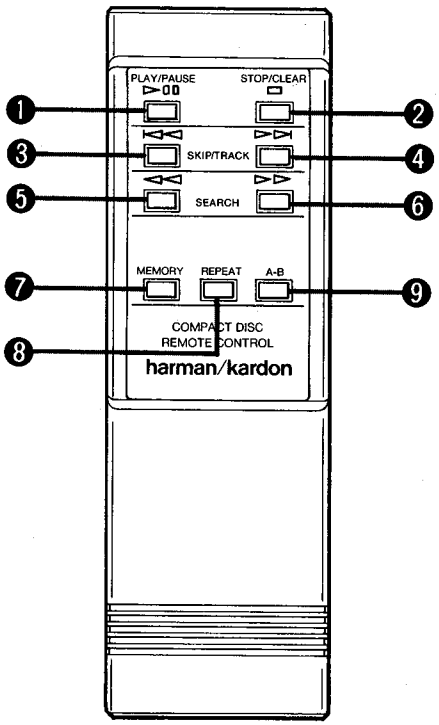

Use the remote control unit within the range shown in the diagram below.

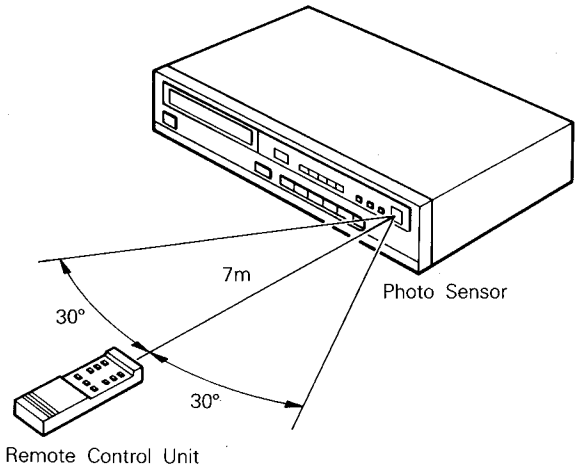

NOTE: When changing the batteries of the remote control, insert the batteries with their polarity aligned according to the diagram on the back of the battery case. 2 AA size (UM-3) batteries are recommended.

❶ PLAY/PAUSE BUTTON
Refer to the main unit's Play/Pause Button section.

❷ STOP/CLEAR BUTTON
Refer to the main unit's Stop/Clear Button section.

❸ ⏮ BUTTON (PROGRAM SELECTION)
Refer to the main unit's ⏮ Button section.

❹ ⏭ BUTTON (PROGRAM SELECTION)
Refer to the main unit's ⏭ Button section.

❺ ◁◁ BUTTON (REVERSE)
Refer to the main unit's ◁◁ Button section.

❻ ▷▷ BUTTON (FAST-FORWARD)
Refer to the main unit's ▷▷ Button section.

❼ MEMORY BUTTON
Refer to the main unit's Memory Button section.

❽ REPEAT BUTTON
Refer to the main unit's Repeat Button section.

❾ A-B REPEAT BUTTON
Refer to the main unit's A-B Repeat Button section.

DISASSEMBLY PROCEDURES

1. Removal of Cabinet Top (Fig. 1)
Remove screws (A), then lift and remove the Cabinet Top and shown in Fig. 1.

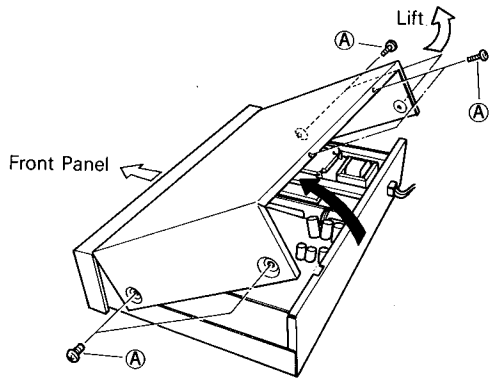

Fig. 1

2. Removal of Front Panel Assembly
Open the disc tray and remove the ornamental front piece. (Fig. 2)
Remove the Cabinet Top, the five screws fastening the Front Panel Assembly (two on top, three on bottom), then release the catches located on both sides of the chassis.

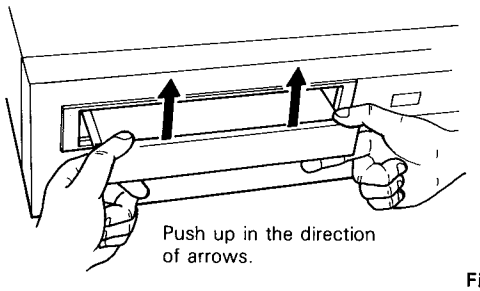

Fig. 2

3. Removal of Switches P. C. Board (PCB-3)
Remove the Front Panel Assembly, the one screw (B), and catches (C). (Fig. 3).

4. Removal of Main P. C. Board (PCB-1)
Remove the Cabinet Top and the three screws (D), support and screw (E) holding the output jack (Fig. 3).

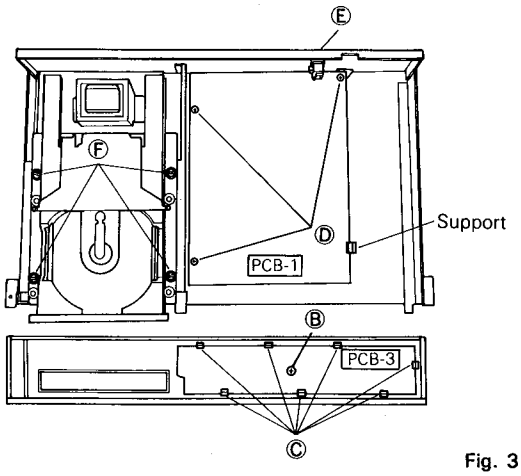

Fig. 3

5. Removal of CD Player Mechanical Assembly
Remove the Cabinet Top, the four screws (F), and the CN201 ~ CN206 connectors on the Main P. C. Board.

6. Removal of Servo P. C. Board (PCB-2)
Remove the Cabinet Top and Cabinet Bottom, six screws (G). (Fig. 4)

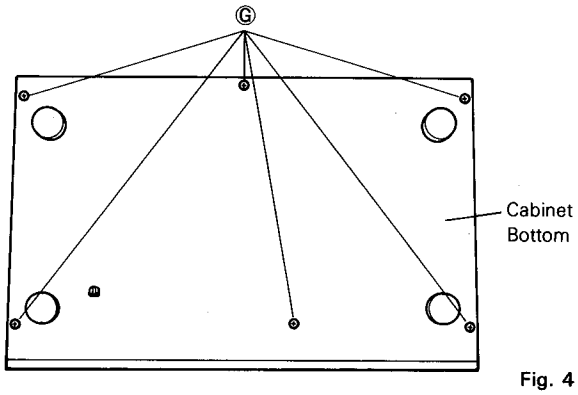

Fig. 4

Remove the CN201 ~ CN206 connectors on the Main P. C. Board, and remove the CN101 and CN102 connectors on the Servo P. C. Board.
Remove the hand-soldered circuit, six points (H) on the Servo P. C. Board. (Fig. 5).

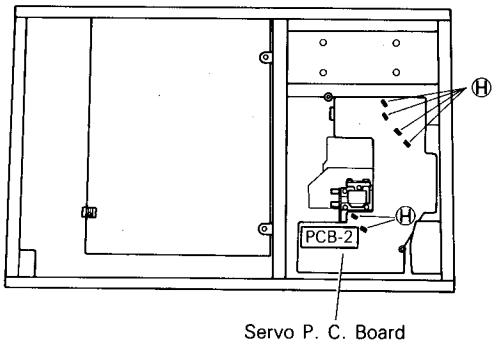

Fig. 5

DISASSEMBLING THE CD PLAYER MECHANICAL ASSEMBLY

1. Removing the Clamper
Removing the two springs at (J) enables you to remove the Clamper. (Fig. 6)

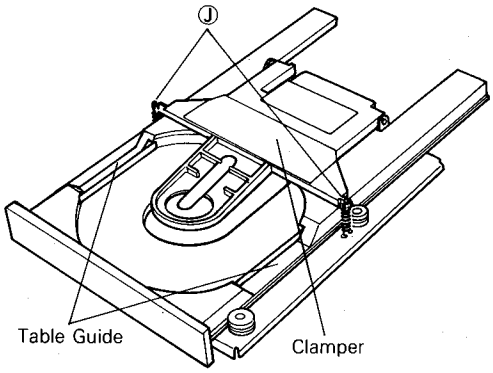

Fig. 6

2. Removing the Disc Tray
Straighten the two catches at (K) and pull out the Disc Tray.

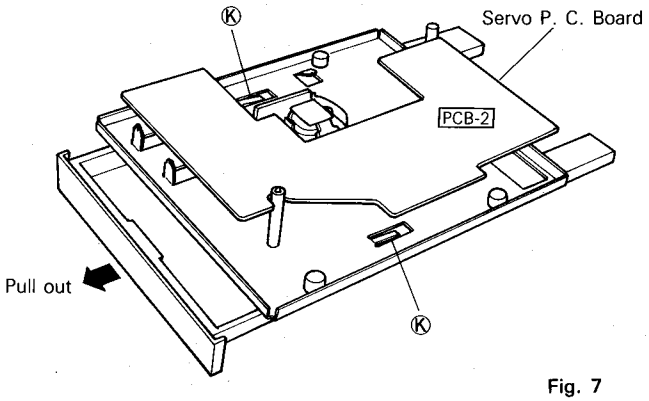

Fig. 7

3. Removing the Optical Pick-up
Remove the connector (CN101 and CN102) connected to the Servo P. C. Board. (Fig. 8)
Remove the three screws located at (M) and the Optical Pick-up can be removed. (Fig. 8)

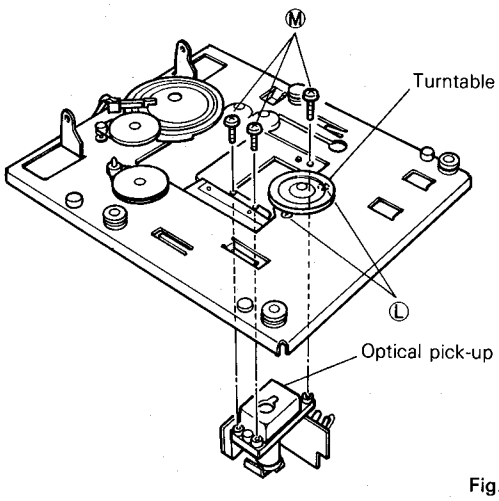

Fig. 8

4. Removal of Spindle Motor (Fig. 8)
Perform instructions 3 for removal of the Optical Pick-up.
Loosen and remove the Turntable.
Remove the two screws (L) to allow for removal of the Spindle Motor.
(Use the turntable base spacer jig to set to the height of the turntable upon assembly.)

POWER CORD REPLACEMENT (FOR SERVICE ENGINEERS OTHER THAN NORTH AMERICA)

In order to prevent fire or shock hazard when replacing the power cord, follow the procedure below to replace the part with the standard supply parts.

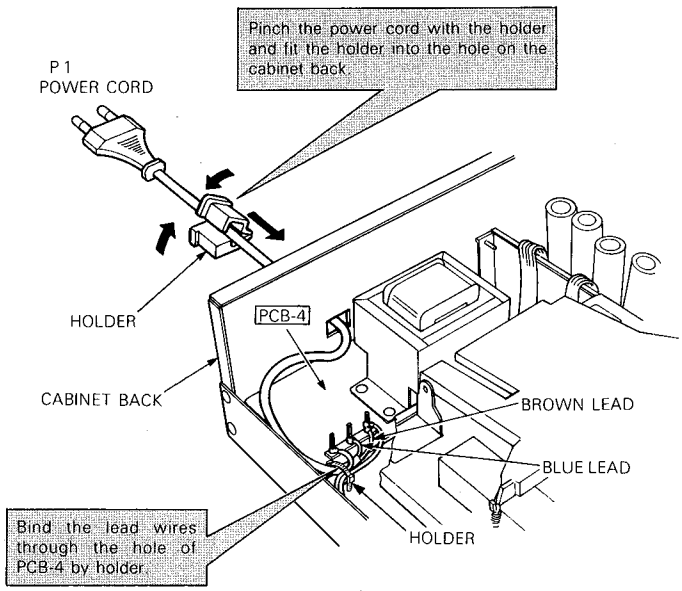

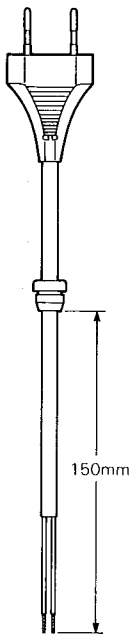

BLOCK DIAGRAM

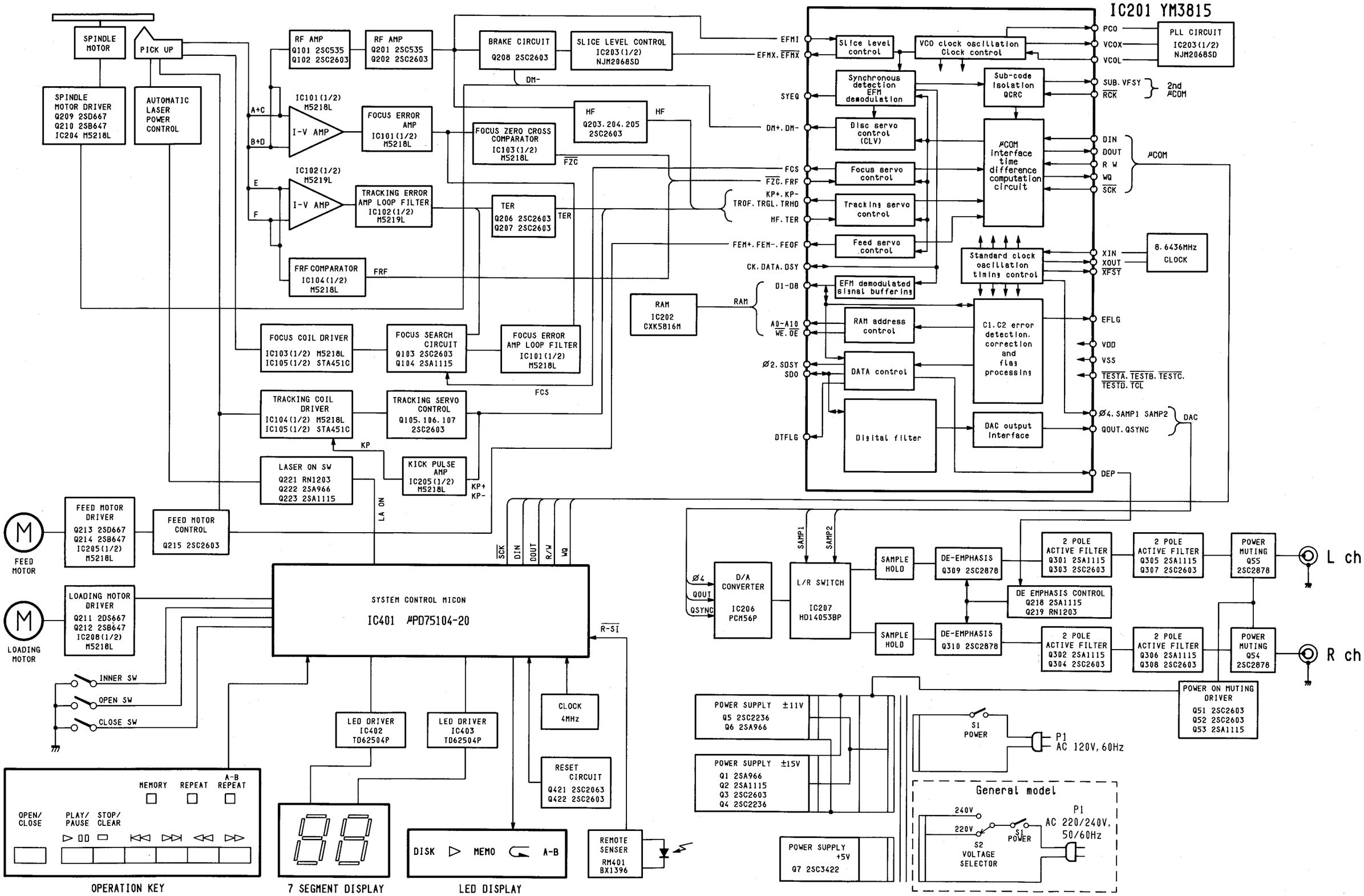

BLOCK DIAGRAM

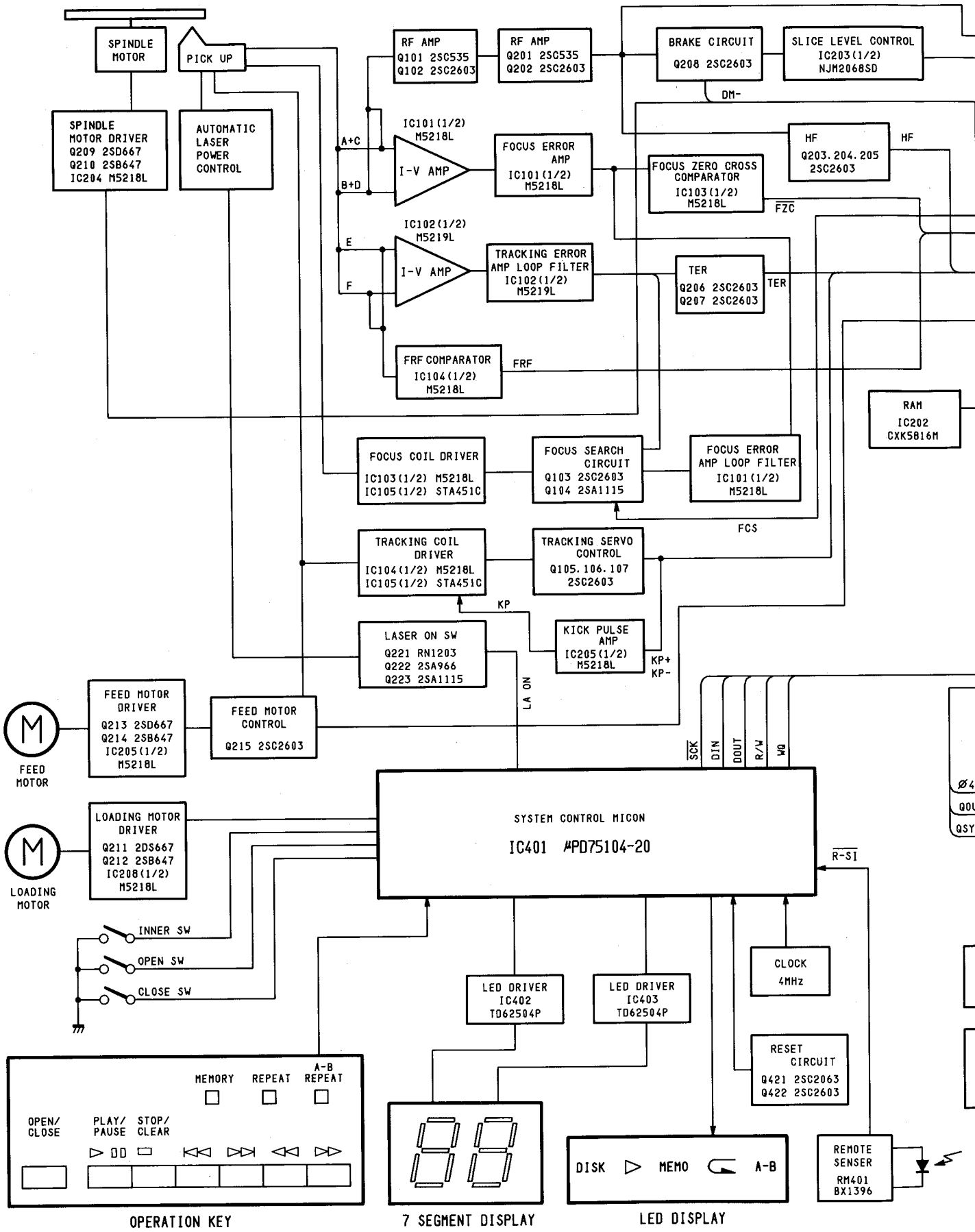

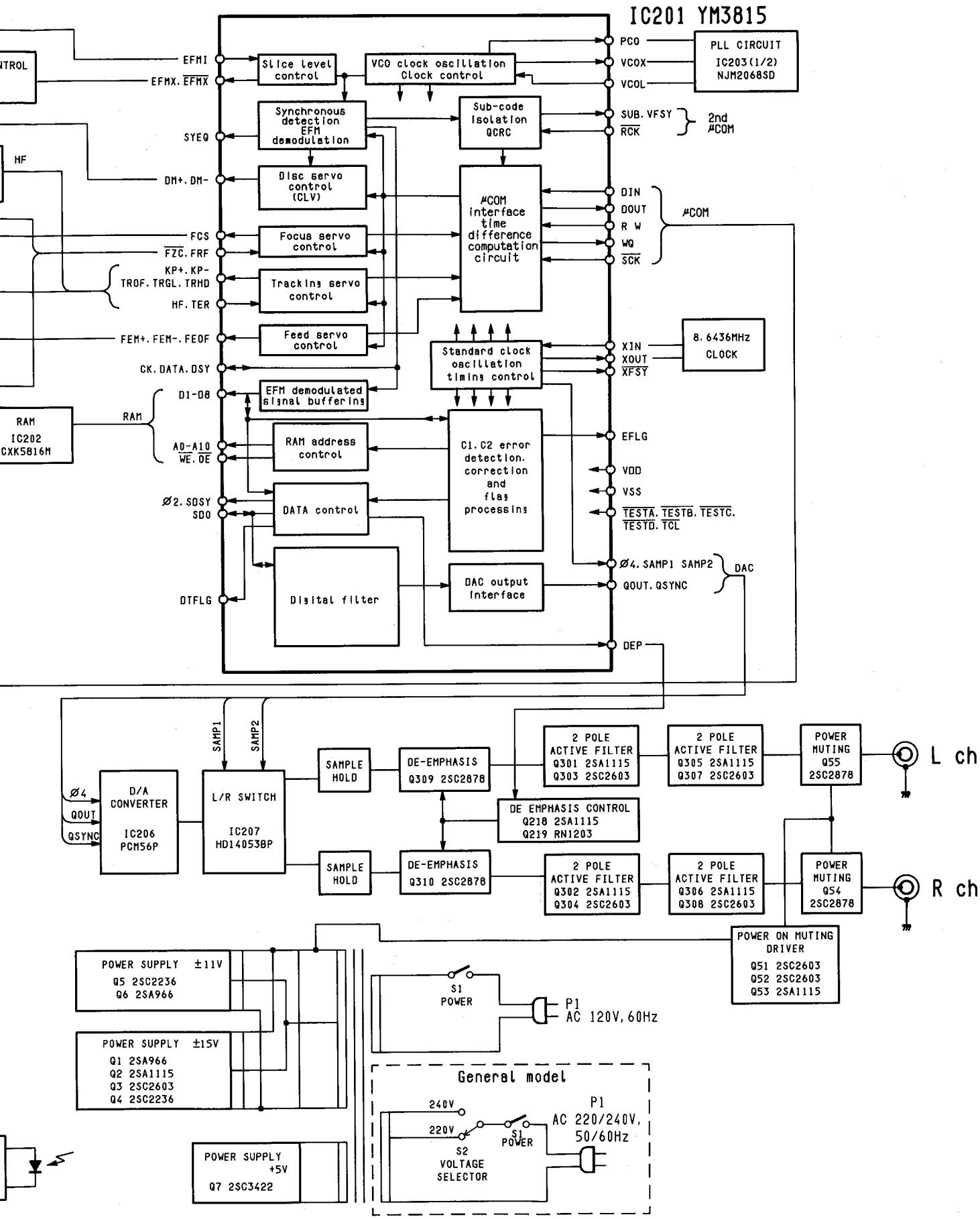
IC201 YM3815
EFMI
EFMX. EFMX
SYEQ
DM+. DM-
FCS
FZC. FRF
KP+. KP-
TROF. TRGL. TRHD
HF. TER
FEM+. FEM-. FEOF
CK. DATA. DSY
D1-D8
RAM
A0-A10
WE. OE
Ø2. SDSY
SDO
DTFLG
Slice level control
VCO clock oscillation Clock control
Synchronous detection EFM demodulation
Sub-code isolation QCRC
Disc servo control (CLV)
Focus servo control
Tracking servo control
Feed servo control
μCOM interface time difference computation circuit
Standard clock oscillation timing control
EFM demodulated signal buffering
RAM address control
C1. C2 error detection. correction and flag processing
DATA control
Digital filter
DAC output interface
PCO
VCOX
VCOL
PLL CIRCUIT
IC203(1/2)
NJM2068SD
SUB. VFSY
RCK
2nd μCOM
DIN
DOUT
R W
WQ
SCK
μCOM
XIN
XOUT
XFSY
8.6436MHz
CLOCK
EFLG
VDD
VSS
TESTA. TESTB. TESTC.
TESTD. TCL
Ø4. SAMP1 SAMP2
QOUT. QSYNC
DAC
DEP
RAM
IC202
CXK5816M
SAMP1
SAMP2
Ø4
QOUT
QSYNC
D/A CONVERTER
IC206
PCM56P
L/R SWITCH
IC207
HD14053BP
SAMPLE HOLD
DE-EMPHASIS
Q309 2SC2878
Q310 2SC2878
DE EMPHASIS CONTROL
Q218 2SA1115
Q219 RN1203
2 POLE ACTIVE FILTER
Q301 2SA1115
Q303 2SC2603
Q302 2SA1115
Q304 2SC2603
Q305 2SA1115
Q307 2SC2603
Q306 2SA1115
Q308 2SC2603
POWER MUTING
Q55
2SC2878
Q54
2SC2878
L ch
R ch
POWER ON MUTING DRIVER
Q51 2SC2603
Q52 2SC2603
Q53 2SA1115
POWER SUPPLY ±11V
Q5 2SC2236
Q6 2SA966
POWER SUPPLY ±15V
Q1 2SA966
Q2 2SA1115
Q3 2SC2603
Q4 2SC2236
POWER SUPPLY +5V
Q7 2SC3422
S1 POWER
P1
AC 120V, 60Hz
General model
240V
220V
S2 VOLTAGE SELECTOR
S1 POWER
P1
AC 220/240V, 50/60Hz

ADJUSTMENT PROCEDURE

1. Meters and Jigs

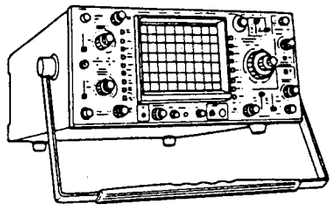

Oscilloscope (3 or more modes, 100MHz, X-Y input possible)

Dual Channel Voltmeter (ACVM)

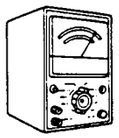

Distortion Meter

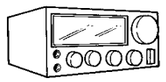

Frequency Counter

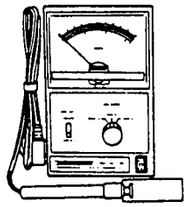

Optical Power Meter

Jitter Meter

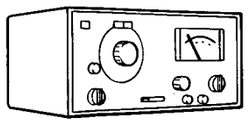

Low Frequency Oscillator (A. F. OSC)

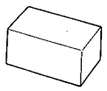

Turntable Base Space Jig SJ-300

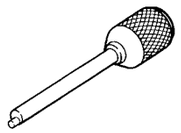

Diffraction Grating Screwdriver SD-300

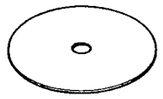

Test Discs
Philips Test Sample 5 814 125-2 (Non-Scratched)
Philips Test Sample 5A 814 126-2 (Scratched)
Sony Type III

2. Adjustment Points

2-1 VR and TP Layout for Servo P. C. Board Adjustment

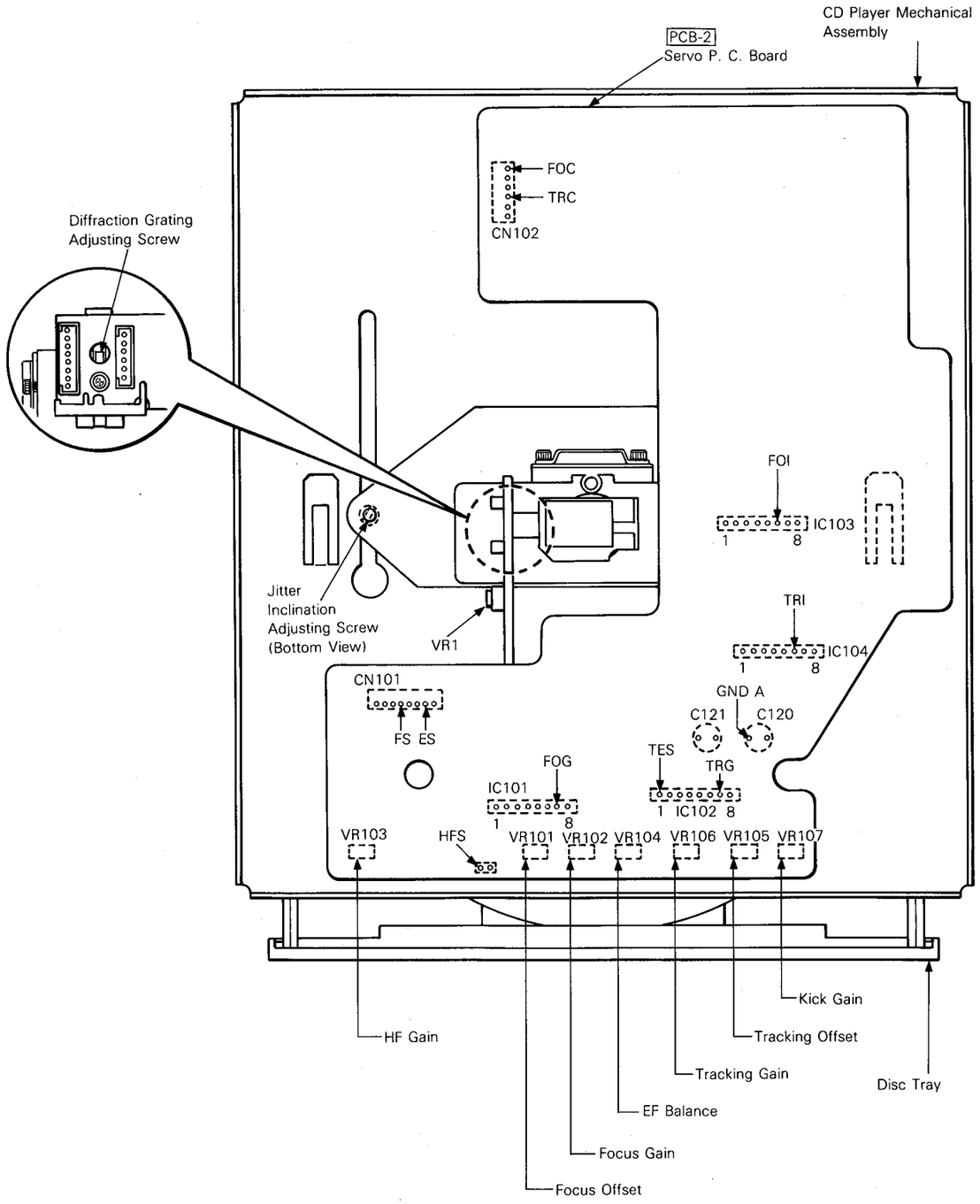

Fig. 9

ADJUSTMENT PROCEDURE

1. Meters and Jigs

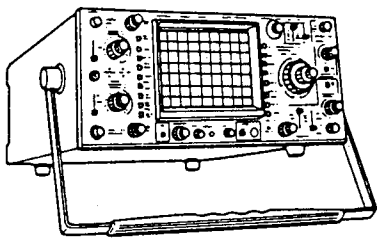

Oscilloscope (3 or more modes, 100MHz, X-Y input possible)

Dual Channel Voltmeter (ACVM)

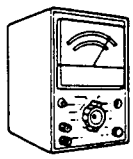

Distortion Meter

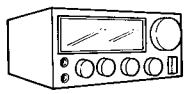

Frequency Counter

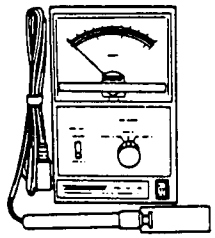

Optical Power Meter

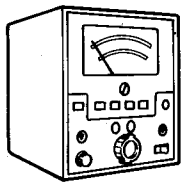

Jitter Meter

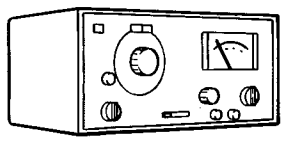

Low Frequency Oscillator (A. F. OSC)

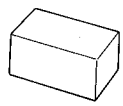

Turntable Base Space Jig SJ-300

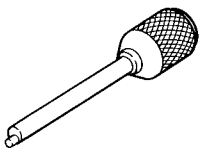

Diffraction Grating Screwdriver SD-300

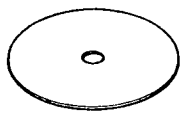

Test Discs
Philips Test Sample 5 814 125-2 (Non-Scratched)
Philips Test Sample 5A 814 126-2 (Scratched)
Sony Type III

2. Adjustment Points

2-1 VR and TP Layout for Servo P. C. Board Adjustment

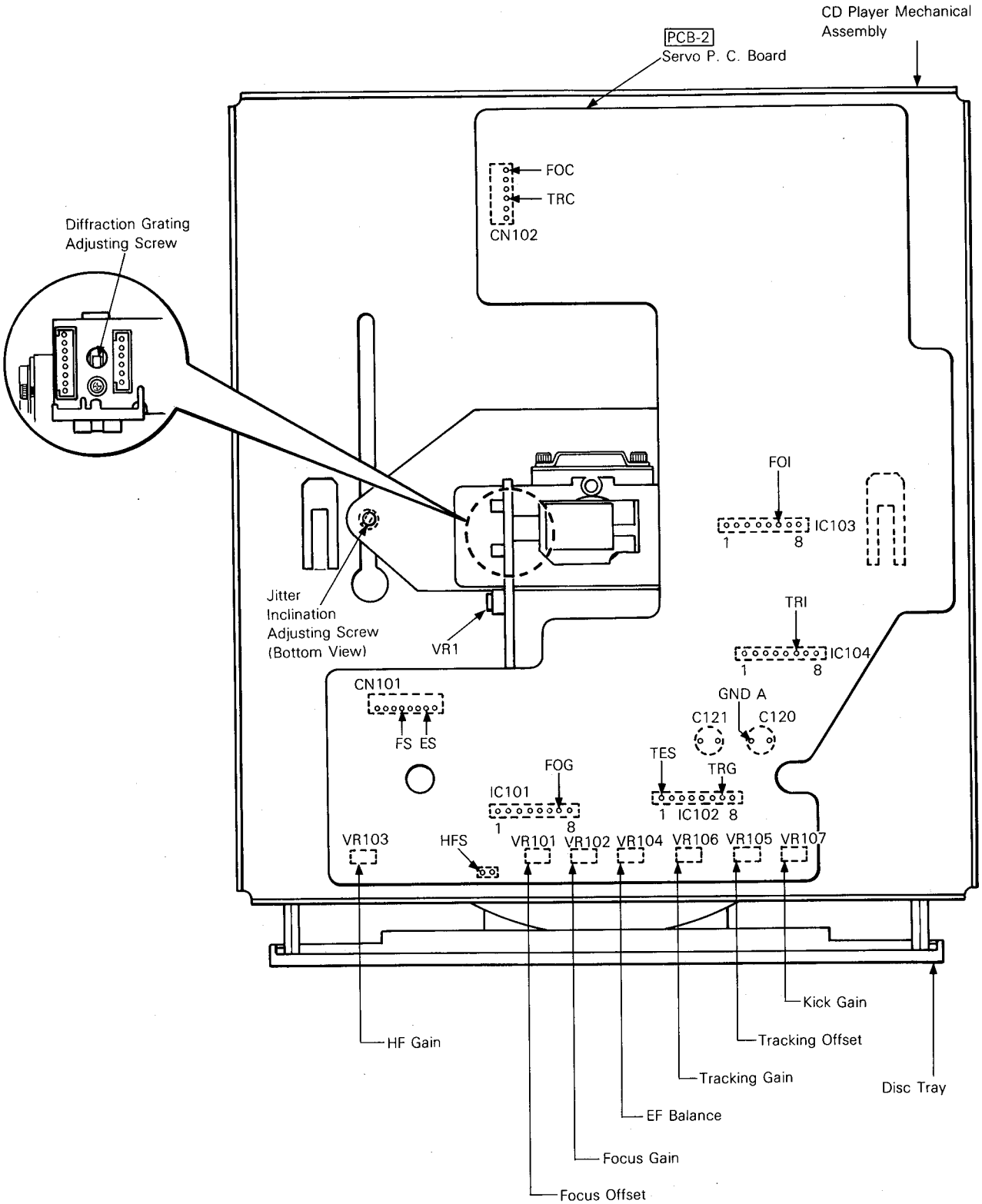

Fig. 9

2-2 Coil and TP Layout for Main P. C. Board Adjustment

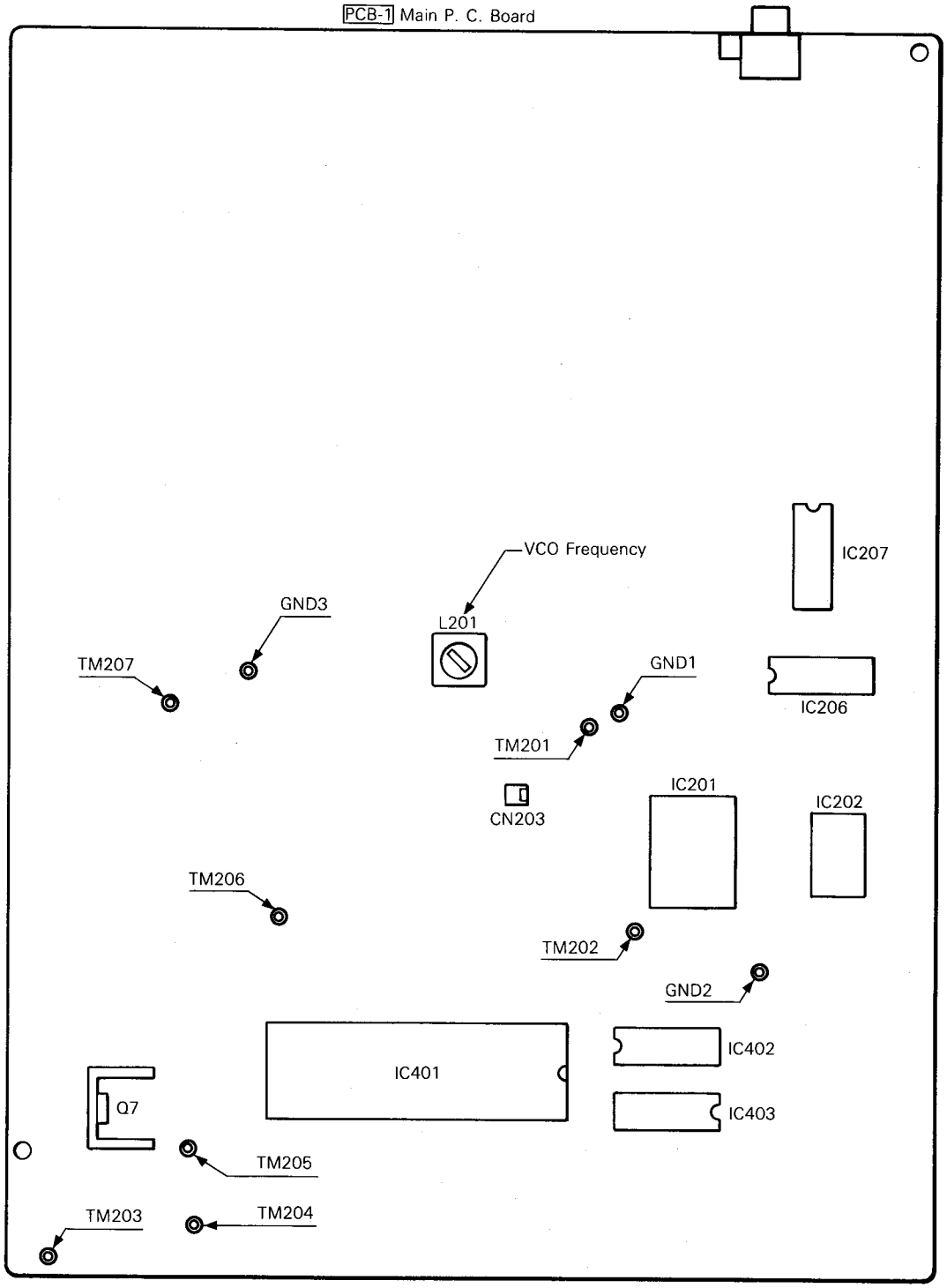

Fig. 10

3. CD Player Mechanical Assembly Adjustment

3-1 Adjustment of Turntable Height (Fig. 11)
(1) Loosen the turntable and insert the turntable base space jig.
(2) Rotate the turntable, check that there are no gaps or rattling.
(3) If there is no turntable base space jig, adjust to a height of 6.9mm.

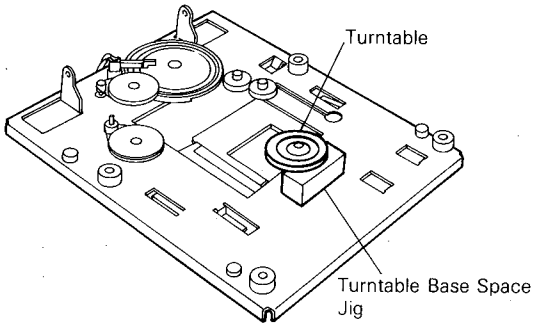

Fig. 11

4. Optical Pick-up Laser Power Check

(1) Short-circuit TM203 and TM205 located on the main P. C. board.
(2) Remove the cabinet top, place the optical power meter against the pick-up, and check that the power is between 0.15mW and 0.4mW.

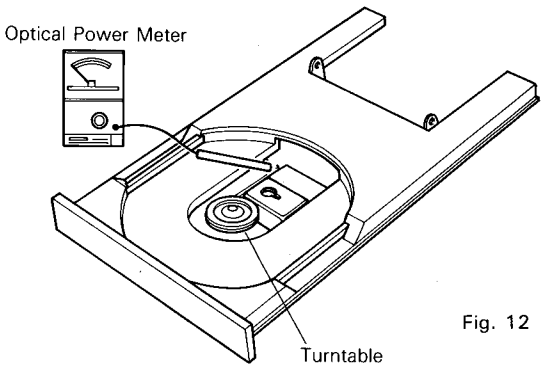

Fig. 12

5. Adjustment of Main P. C. Board

5-1 VCO Frequency Adjustment (Set is No signal).
(1) Connect the frequency counter to TM202 (CLK) and GND2. (Fig. 13)
(2) Remove wire connector CN203, turn the power switch on.
(3) Rotate the L201 core and adjust so that the frequency counter shows a value of 4.3218MHz ±0.02MHz.
(4) After adjusting, turn the power off an connect the CN203 wire connector.

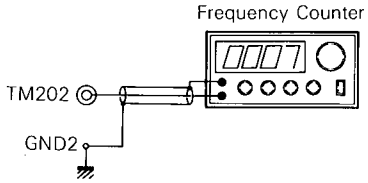

Fig. 13

6. Adjustment of Servo P. C. Board

6-1 Initial Setting of Adjustment Potentiometers
Before adjusting, preset adjustment potentiometers VR101, 102, 103, 104, 105, 106 and 107 for mechanical center.

6-2 Disc Used for Adjustment
Test Discs: Philips Test Sample 5 814 125-2 (non scratched)
Philips Test Sample 5A 814 125-2 (scratched)
Sony Type III.

6-3 Releasing Tracking Servo
(1) Connect oscilloscope to TM201 and GND2. (fig. 14)
(2) Insert the Philips test disc #5 and place the unit in the play mode. Select track number 12.
(3) Check to make sure that the track number flashes first and the eye pattern on the oscilloscope stays still.
(4) Defeat the laser interlock by connecting test points TM203 and TM205 together. In addition, connect TM206 to the jumper wire between TM203 and TM205.
(5) Within 5 seconds after the above step 4, connect GND2 to TM204.
(6) If the disc stops, or, starts spinning VERY VERY fast, repeat the above steps from item 2.

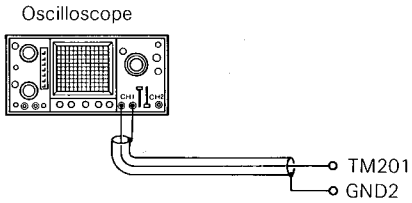

Fig. 14

6-4 Diffraction Grating Adjustment
(1) Connect oscilloscope to TES and GNDA. (fig. 15)
(2) Insert the disc and place the unit in the play mode.
(3) Release the tracking servo. (Step 6-3)
(4) Adjust diffraction grating screw so that the waveform becomes maximum.

NOTES
- Use alignment tool part number SD-300 for the diffraction grating adjustment.
- Adjust at track numbers 8 and 1 of Philips test disc #5.
- There are 2 points where the waveform is maximized while turning the alignment tool once fully (360°). The servo system works at only one of them.

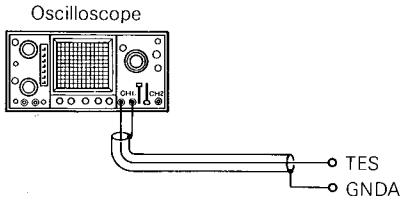

Fig. 15

6-5 Jitter Inclination Adjustment
(1) Connect the jitter meter to TM201 and GND1. (fig. 16)
(2) Insert Philips test disc #5 and place unit in play mode on track number 9.
(3) Confirm the jitter meter reading does not exceed 35ns.
(4) If 35ns is exceeded, remove the disc tray. (Refer to step 2 on page 8.)
(5) Place Philips test disc #5 on the spindle motor.
(6) Put unit into play mode on track number 9.
(7) Adjust the jitter inclination screw (see figure. 9) for minimum reading.

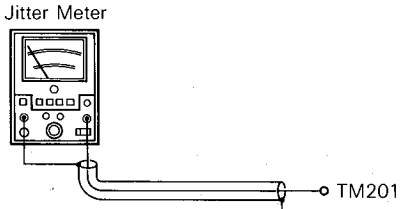

Fig. 16

6-5A Jitter Inclination Adjustment (without Jitter Meter)
(1) Remove the disc tray. (Refer to step 2 on page 8.)
(2) Place Philips test disc #5 on the spindle motor.
(3) Put unit into play mode on track number 9.
(4) Connect oscilloscope to TM201 and GND1. (fig. 17)
(5) Adjust the jitter inclination screw until the signal waveform (eye pattern fig. 18) is distinct and clear.

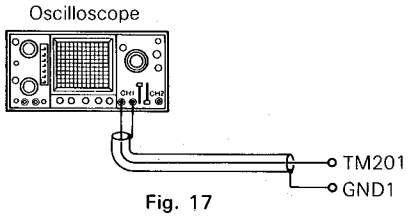

Fig. 17

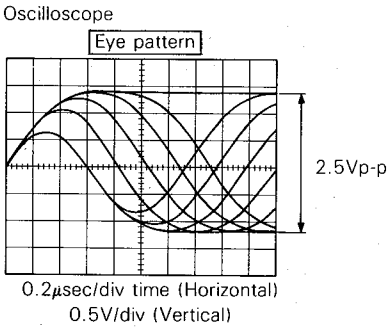

Waveforms 3T-11T

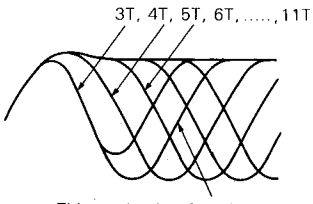

This portion is referred to as the eye pattern.

The abnormal eye pattern has less distinct lines and smaller amplitude than that of the good waveform.

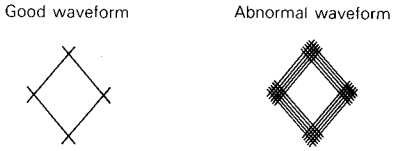

Adjust so that the good waveform is obtained.

Fig. 18

6-6 Focus Offset Adjustment
(1) Connect the jitter meter to TM201 and GND1. (fig. 16)
(2) Insert the disc and place the unit in the play mode.
(3) Adjust VR101 until the jitter becomes minimum.

6-6A Focus Offset Adjustment (without Jitter Meter)
(1) Connect oscilloscope to TM201 and GND1. (fig. 17)
(2) Insert the disc and place the unit in the play mode.
(3) Adjust VR101 until the signal waveform (eye pattern fig. 18) is distinct and clear.

6-7 Focus Gain Adjustment
(1) Connect an audio frequency oscillator with 220k ohm resistor in series to FOI and GNDA. (fig. 19)
(2) Set the audio frequency oscillator output to 800Hz, 1.5V rpm.
(3) Connect AC volt meter to B.P.F. (fig. 20)
(4) Connect B.P.F. to test point FOG and GNDA and then to FOC and GNDA. Measure the output level at each point. (fig. 20)
(5) Insert the Philips disc #5 and place the unit in the play mode on track number 8.
(6) Adjust VR102 so that the voltage differential between FOC and FOG becomes 13dB ± 2dB. (FOC – FOG = 13dB)

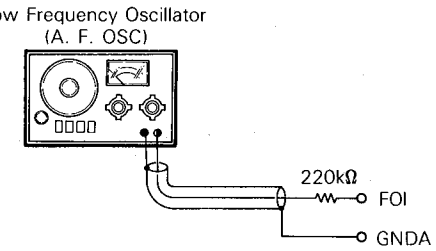

Fig. 19

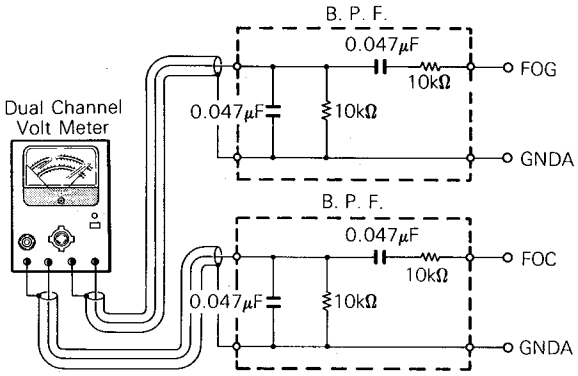

Fig. 20

6-8 HF Gain Adjustment
(1) Connect the oscilloscope to TM201 and GND1. (fig. 17)
(2) Insert the disc and place the unit in the play mode.
(3) Adjust VR103 so that the voltage becomes 2.5Vp-p ±0.3V. (fig. 21)

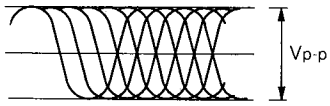

Fig. 21

6-9 EF Balance Adjustment
(1) Connect the oscilloscope (DC input) to TES and GNDA. (fig. 15)
(2) Insert the disc and place the unit in the play mode.
(3) Release tracking servo. (See step 6-3)
(4) Adjust VR104 so that the amplitude above and below the zero DC line becomes equal. (Amplitude A = amplitude B) (fig. 22)

NOTE: Instead of using the DC input of a oscilloscope you may also use a DC null voltmeter for this alignment.

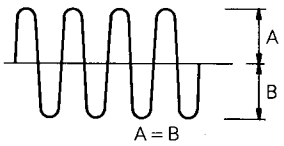

Fig. 22

6-10 Tracking Offset Adjustment
(1) Switch the power switch on and slide the disc tray out by pressing the open/close button.
(2) Connect the oscilloscope (DC input) to TRC and GNDA. (fig. 23)
(3) Adjust VR105 for zero volts DC ±20mV.

NOTE: Instead of using the DC input of a oscilloscope you may also use a DC null voltmeter for this alignment.

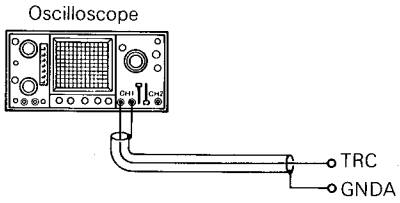

Fig. 23

6-11 Tracking Gain Adjustment
(1) Connect the audio frequency oscillator with 220k ohm resistor to TRI and GNDA. (fig. 24)
(2) Set the audio frequency oscillator for 800Hz, 20mV.
(3) Connect AC voltmeter to B.P.F. (fig. 25)
(4) For the measurements indicated below it is convenient to connect extending wires to TRG, TRC and GNDA.
(5) Insert the Philips test disc #5 and place the unit in the play mode on track number 8.
(6) Connect B.P.F. to test point TRG and GNDA and then to TRC and GNDA. Measure the output level at each point. (fig. 25)
(7) Adjust VR106 so that the voltage difference between TRG and TRC becomes 14dB ±2dB. (TRG − TRC = 14dB)
(8) Check tracking offset in step 6-10 and repeat step 6-10 and step 6-11 if necessary.

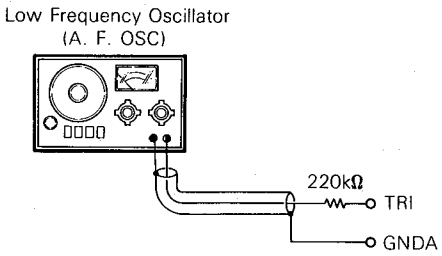

Fig. 24

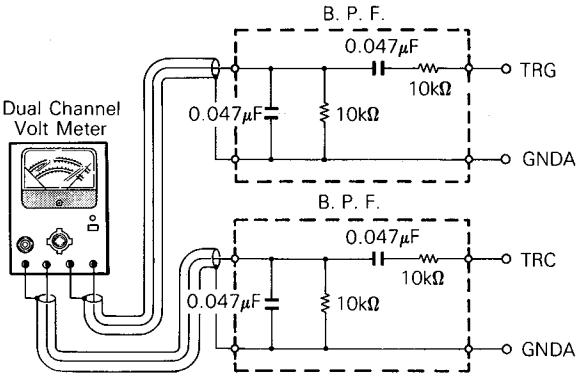

Fig. 25

6-12 Kick Gain Adjustment
(1) Connect oscilloscope external trigger input to TM207 and GND3. Connect oscilloscope vertical input to TM201 and GND1. (fig. 26)
(2) Insert the Philips test disc #5 and place unit in pause mode on track number 1.
(3) Adjust VR107 so that the amplitude of the waveform becomes the same at A and B. (fig. 27)

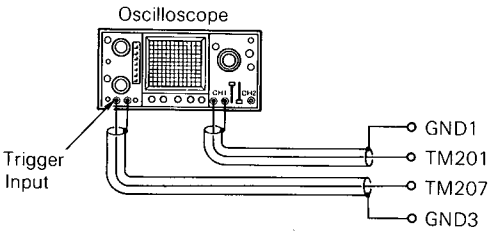

Fig. 26

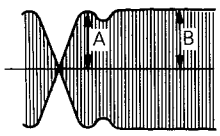

Fig. 27

Pause Waveform

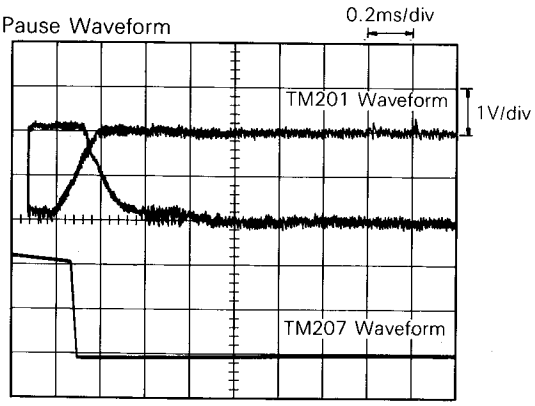

Cue Waveform

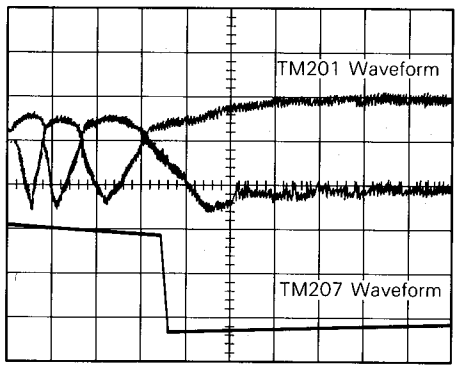

REV Waveform

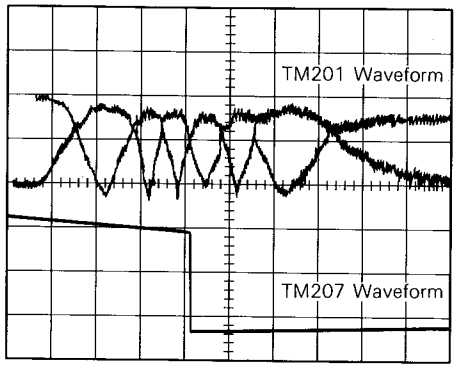

REW Waveform

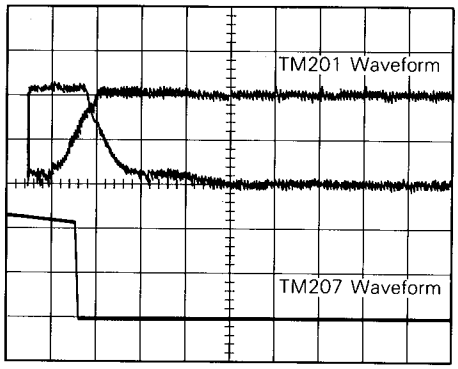

FF Waveform

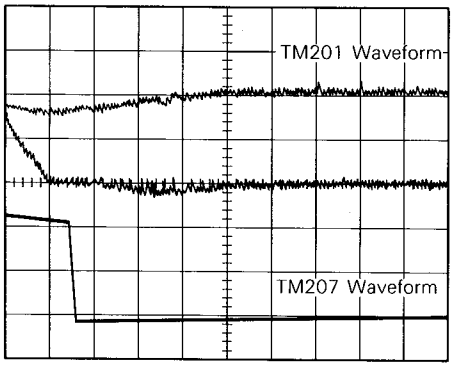

Fig. 28 Eye Pattern Waveforms Upon Track Jump

7. Operation Check

7-1 Playability
Use the Philips Test 5A (scratched) test disc, play the following portions and make sure no tracks are jumped.
(1) Wedge (Interruption)
700μm Selection 8 0'00''—0'30''
(2) Black Spot (Black Dot)
600μm Selection 13 4'10''—Selection 14 0'30''
(3) Fingerprint
Selection 19 0'00''—0'30''

7-2 Discs for Adjustments

	Adjustment	Disc	Check
1	Frequency Response	SONY TEST CD TYPE III	20Hz—20kHz +0.5dB/−1.5dB
2	Distortion Rate	SONY TYPE III Selection 1	0.05% or below
3	S/N	SONY TYPE III Selection 1 PLAY/PAUSE	90dB or greater
4	Emphasis Response	SONY TYPE III Selection 39—41	(39) 1kHz −0.37dB±0.5dB (40) 5kHz −4.53dB±0.5dB (41) 16kHz −9.04dB±0.5dB
5	Cross Talk	SONY TYPE III Selection 30 (L), Selection 34 (R)	70dB or greater

INSTALLATION OF DISC DRAWER AND CLAMPER

1. Press the power button in the OFF position.
2. Place cam gear in position as indicated in figure A. Make sure the disc drawer switch is in the position as indicated. If is not, rotate cam gear counterclockwise until disc drawer switch is in the position as indicated in figure A.
3. Push the drawer in all the way. Bend drawer catches upward to prevent drawer from sliding out of unit.
4. Press the power button in the ON position.
5. Press the open/close button. The drawer should move outward all the way into the ''load'' position.
6. Press the open/close button. The drawer should move inward all the way into the ''play'' position.
7. Reinstall clamper while making sure that clamper pin inserts into cam gear on the outside edge of the spring.

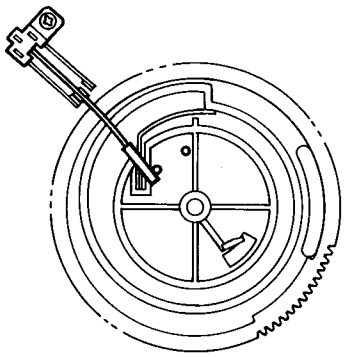

Figure A

TROUBLE SHOOTING

1. Does not initialize

Door close — NO → ● Check loading circuit

↓ YES

"DISC SET" display does not go off — YES →
- ● Pick-up inner switch defective
- ● Check pick-up slide mechanism (rack installation etc.)
- ● Check pick-up FEED motor and circuit

↓ NO

Is pick-up laser output normal? — NO →
- ● Check APC circuit
- ● Check pick-up (laser current)

↓ YES

Is focus search waveform output from IC201 (13 pin)? — NO →
- ● Check focus search circuit
- ● Pick-up defective (laser)

↓ YES

Does pick-up lens move vertically? — NO →
- ● Check pick-up connector
- ● Pick-up defective (actuator)

↓ YES

Do FRF and FZC become "active"? — NO →
- ● Check focus offset adjustment
- ● Check for improper turntable height
- ● Check RF pre-amp circuit
- ● Check pick-up (photodiode)

↓ YES

Does disc rotate properly? — NO →
- ● Check spindle motor driving circuit
- ● Spindle motor defective
- ● Friction between disc and disc holder

↓ YES

Is eye pattern level normal? (2.5Vp-p ± 0.3V) — NO →
- ● Focus offset adjustment improper
- ● Pick-up objective lens dirty
- ● Check RF pre-amp circuit, RF circuit

↓ YES

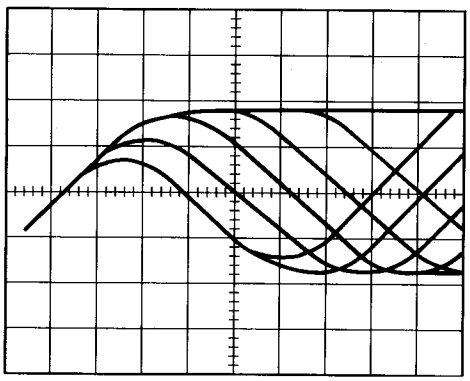

Eye Pattern

Is bit synchronization normal? —NO→ ● PLL adjustment improper
● Friction between disc and disc holder

↓ YES

Is TM207 kick pulse waveform normal? —NO→ ● Check tracking control circuit
● Check IC201 control pin (22 and 23)

Bit Synchronization Waveform

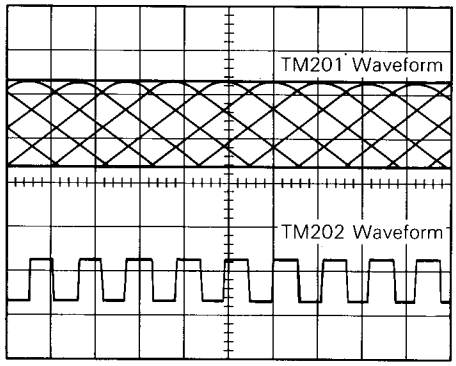

FF Waveform

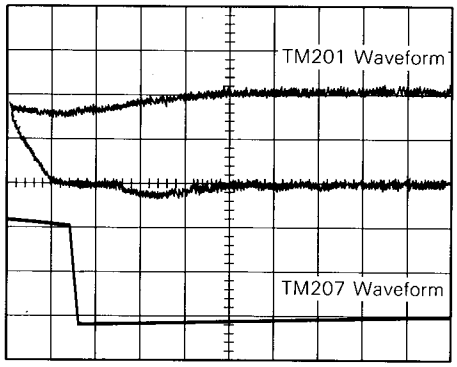

Pause Waveform

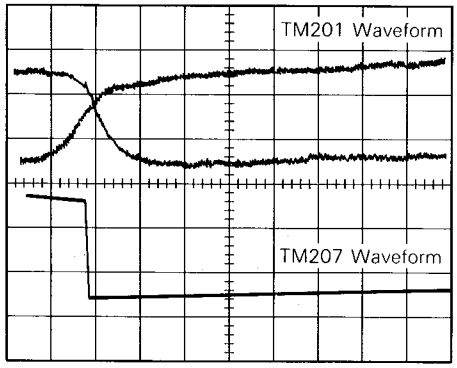

Cue Waveform

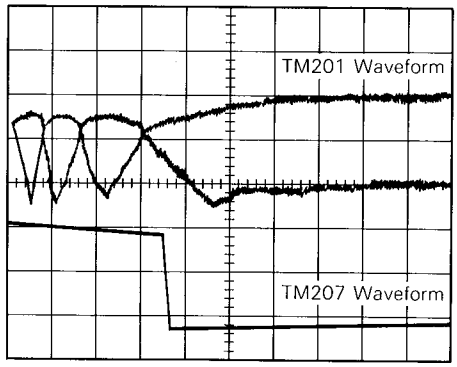

REV Waveform

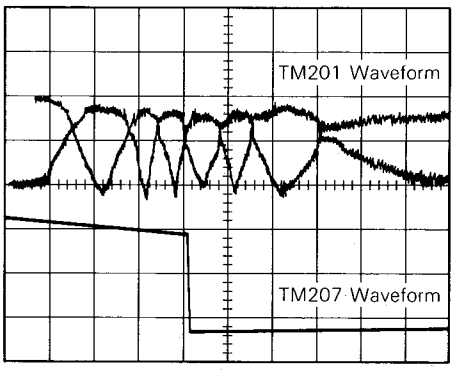

REW Waveform

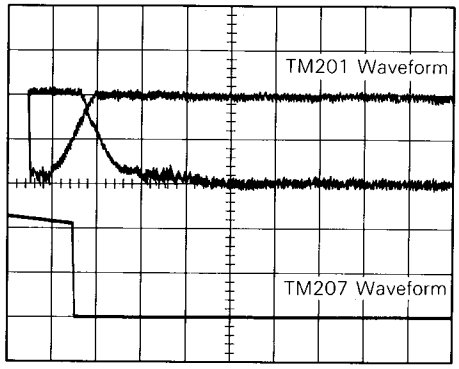

2. No sound is produced

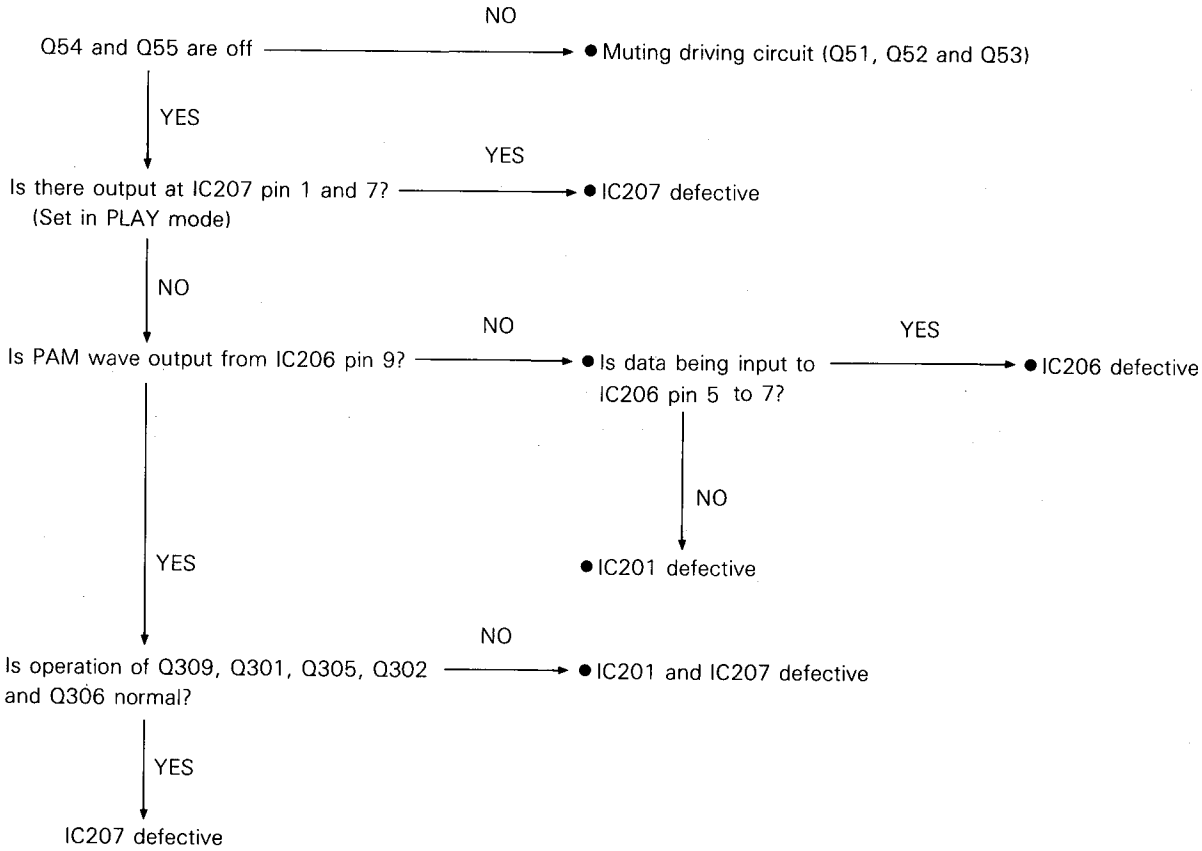

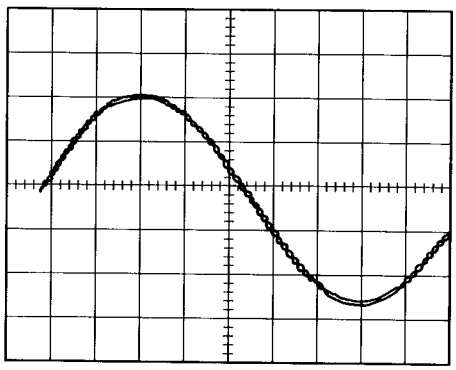

RAM Waveform
(Test Disc: Sony Type III, 1st selection)

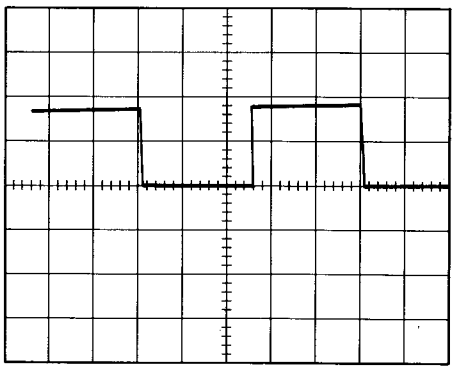

IC206 Pin 7 Waveform
(Test Disc: Sony Type III, 1st selection)

3. IC201 Terminal Functions

Terminal number	Terminal code	I/O	Outline of functions
1	VDD	I	+5V power supply terminal.
2 3	VCOX VCOI	O I	The LC resonance circuit is connected between these terminals. These terminals are used for the VCO clock oscillation (average 8.6436MHz).
4	PCO	O	This is the VCO clock control output terminal. This sets the VCO clock oscillation circuit so that the frequency increases when the average DC voltage between these terminals is high.
5 9	VOC VSS	I I	These are the grounding terminals.
6 7	EFMX $\overline{\text{EFMX}}$	O O	Connect to the EFM signal slice level control circuit. This is the amplification-limited EFM signal output terminal, 8>7. The gain of 7>6 is 15.
8	EFMI	I	Input the EFI signal (1—2Vp-p) into this terminal.
10	SYEQ	O	This is the monitor output terminal that gives a "H" level signal when the synchronization signal of the EFM pattern and the synchronization signal of the internal counter correspond.
11 12	DM+ DM−	O O	These are the PWM output terminals, connected to the disc motor drive circuit. It is not possible for both terminals to register "H" simultaneously.
13	FCS	O	This is the focusing output terminal.
14	$\overline{\text{FZC}}$	I+	Based on the focus error signal, a "L" signal will be input when the focus point is reached.
15	FRF	I	A "H" signal will be entered into this terminal when reflected light is received.
16	HF	I	The EFM envelope signal (amplitude logic level) is entered into this terminal.
17	TER	I	The tracking error signal (amplitude logic level) is entered into this terminal.
18	$\overline{\text{TEST D}}$	I+	This test terminal is to be grounded, and contains pull-up resistors.
74	TCL	I+	This test terminal is ungrounded, and contains pull-up resistors.
19	TROF	O	This is the output terminal that switches off the tracking signal of the tracking servo circuit.
20	TRGL	O	This the output terminal minimizes the gain of the tracking servo circuit.
21	TRHD	O	This the output terminal holds the tracking error signal of the tracking servo circuit while KP+ or KP− (see below) are being output.
22 23	KP+ KP−	O	These output terminals are for the track kick function, and are connected to the tracking servo circuit.
24	FEOF	O	This output terminal is used to switch off the input signal of the feed servo circuit.

Terminal number	Terminal code	I/O	Outline of functions
25 26	FEM+ FEM−	O O	These output terminals are for the high-speed feed function, and are connected to the feed servo circuit.
35	WQ	O	This request output terminal is connected to μCOM, and requests that data be sent from SVC>μCOM.
36	R/W	O	This output terminal is connected to μCOM, and is used for the switching of the data transmission mode. When R/W="L", data is transmitted from SVC>μCOM, and when R/W="H", data is transmitted from μCOM>SVC.
37	D OUT	O	This data output terminal is connected to μCOM. When R/W="L", data can be transmitted from SVC>μCOM according to the SCK clock input.
38	D IN	I	This data input terminal is connected to μCOM. When R/W="H", data is transmitted from μCOM>SVC according to the SC key clock input.
39	$\overline{\text{SCK}}$	I	Connected to μCOM, this terminal is for the clock input, required for data transmission.
75	$\overline{\text{XFSY}}$	I	This is the frame synchronization signal (7.35kHz) input terminal, connected to the SCG output.
68	$\phi 4$	O	This is the crystal clock (4.321MHz) output terminal.
33	$\overline{\text{RCK}}$	I+	Connected to μCOM, this terminal is for the clock input, required for the subcode transmission. It is disconnected when not being used.
31	VFSY	O	This is the VCO frame synchronization signal (average 7.35kHz) output terminal.
30	SUB	O	This is the subcode output terminal, connected μCOM. The subcode can be transmitted from SVC>μCOM, according to the RCK clock input.
29	DSY	O	This is the synchronization signal output terminal for the serial signals (see below).
28	DATA	O	This is the serial signal output terminal for the 8 bit EFM demodulation signals and the 5 bit control signals.
27	CK	O	This is the VCO clock (average 4.3218MHz) output terminal.
41 78	VSS VSS	I I	These are the grounding terminals.
69 70 71	$\overline{\text{TEST A}}$ $\overline{\text{TEST B}}$ $\overline{\text{TEST C}}$	I+ I+ I+	These test terminal are ungrounded, and contain pull-up resistors.
40 42 43 44 45	A0 A1 A2 A3 A4	O O O O O	These are the address output terminals, connected to the RAM address terminals.

Terminal number	Terminal code	I/O	Outline of functions
46 47 48 49 50 53	A5 A6 A7 A8 A9 A10	O O O O O O	There are the address output terminals, connected to the RAM address terminals.
51	$\overline{WE}$	O	This is connected to the RAM WE terminal. When a "L level" signal is registered, the RAM will be set to the WRITE mode.
52	$\overline{OE}$	O	This is connected to the RAM OE terminal. When a "L level" signal is registered, the RAM will be set to the READ mode.
54 55 56 57 58 59 60 61	D8 D7 D6 D5 D4 D3 D2 D1	I/O I/O I/O I/O I/O I/O I/O I/O	These are connected to the RAM data terminals. The output mode is set when the cycle at the data input terminal is WE = "L", and the input mode is set when the cycle is WE = "H".
62	DEP	O	This is the output terminal for the audio frequency characteristics switching signals of the audio filter. The emphasis will be required when "H" is registered.
34	$\phi 2$	O	This is the crystal clock (2.1609MHz) output.
66	SD0	I/O	This is the serial signal output for the DAC. Using $\phi 2$ clock beat rate, the signals are output from LSB in the order of L channel 24 bit—R channel 25 bit.
67	SDSY	O	This is the synchronization signal output for the above serial signals. The level is "H" for L channel and "L" for R channel.
73	EFLG	O	This monitor output terminal depicts the C1 and C2 error correction operation mode.
76 77	SAMP 1 SAMP 2	O O	This is the degliche signal for the respective channels of the DAC analog output.
32 72	VDD VDD	I I	This is the +5V power supply terminal.
79 80	X IN X OUT	I O	A crystal oscillator is connected between these terminals, which are used for the crystal clock (8.6436MHz) oscillation.
65	Q OUT	O	This is the serial signal output for the DAC.
64	Q SYNC	O	This is the synchronization signal output for the 0 OUT
63	DTFLG	O	Error flag to the serial signal output for the DAC.

4. IC401 Terminal Functions

Terminal number	Terminal code	I/O	Outline of functions	Active level
1		I		
2		I		
3		I		
4	$\overline{\text{R-SI}}$	I	Remote control serial signal input	L
5		I		
6		I		
7		I		
8		I		
9		I		
10		I		
11		O		
12		O		
13		O		
14	R/W	O	Serial communications direction control (→YM3815)	H (command) L (data)
15	D OUT	I	Command transmission time (75104→3815)	H
16	D IN	O	Time data transmission line (3815→75104)	H
17	$\overline{\text{SCK}}$	O	Serial communications clock	L
18	WQ	I	Time data read out demand	H
19	$\overline{\text{A-B}}$	I	Key input	L
20	$\overline{\text{REPEAT}}$	I	Key input	L
21	$\overline{\text{MEMO}}$	I	Key input	L
22	$\overline{\text{FF}}$	I	Key input	L
23	$\overline{\text{FR}}$	I	Key input	L
24	$\overline{\text{FS}}$	I	Key input	L
25	$\overline{\text{RS}}$		Key input	L

Terminal number	Terminal code	I/O	Outline of functions	Active level
26	$\overline{\text{STOP}}$/ $\overline{\text{CREAR}}$	I	Key input	L
27	$\overline{\text{PLAY}}$/ $\overline{\text{PAUSE}}$	I	Key input	L
28	$\overline{\text{OPEN}}$/ $\overline{\text{CLOSE}}$	I	Key input	L
29		I		
30	$\overline{\text{TEST}}$	I	Test terminal	L
31				
32	VDD	I	+5V power supply terminal	
33	$\overline{\text{DISC}}$	O	Display output	L
34	$\overline{\text{PLAY}}$	O	Display output	L
35	$\overline{\text{MEMO}}$	O	Display output	L
36	$\overline{\text{REP}}$	O	Display output	L
37	a1	O	7 segment display (a)	H
38	b1	O	7 segment display (b)	H
39	c1	O	7 segment display (c)	H
40	d1	O	7 segment display (d)	H
41	e1	O	7 segment display (e)	H
42	f1	O	7 segment display (f)	H
43	g1	O	7 segment display (g)	H
44		O		
45	$\overline{\text{RST}}$	I	Reset input	L
46	X2	I	Oscillator circuit input	H
47	X2	I	Oscillator circuit input	H
48	a2	O	7 segment display (a)	H
49	b2	O	7 segment display (b)	H
50	c2	O	7 segment display (c)	H

Terminal number	Terminal code	I/O	Outline of functions	Active level
51	d2	O	7 segment dispaly (d)	H
52	e2	O	7 segment display (e)	H
53	f2	O	7 segment display (f)	H
54	g2	O	7 segment display (g)	H
55				
56				
57	$\overline{\text{CLOSE}}$	I	Disc tray closed position detection switch input	L
58	$\overline{\text{OPEN}}$	I	Disc tray open position detection switch input	L
59	$\overline{\text{INNER}}$	I	Pick-up inner circumference position detection switch input	L
60	$\overline{\text{A-B}}$	O	Display output	L
61	CLOSE	O	Disc tray closing direction driving output	H
62	OPEN	O	Disc tray opening direction driving output	H
63	LD ON	O	Pick-up laser output signal	H
64	GND		GND pin	

IC BLOCK DIAGRAM

IC101, IC103, IC104,
IC204, IC205, IC208 : M5218L
Dual Operational Amplifier

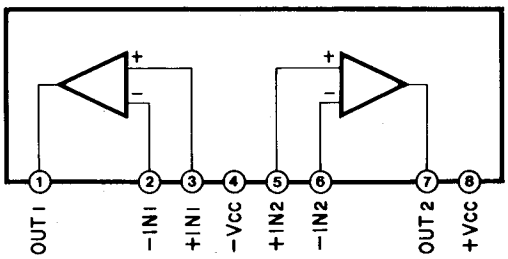

IC102 : M5219L
Dual Operational Amplifier

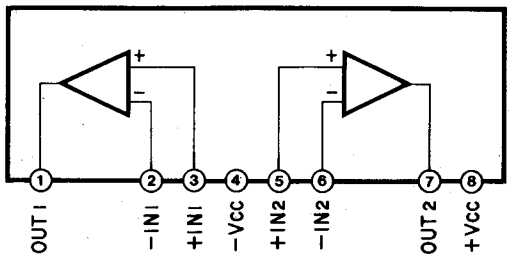

IC105 : STA451C
Transistor Array

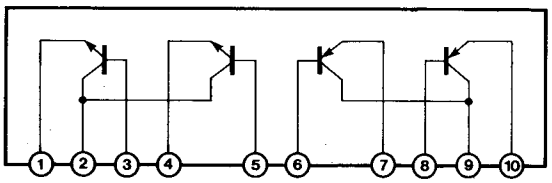

IC202 : CXK5816M-15L
2000 word × 8 bit Static RAM

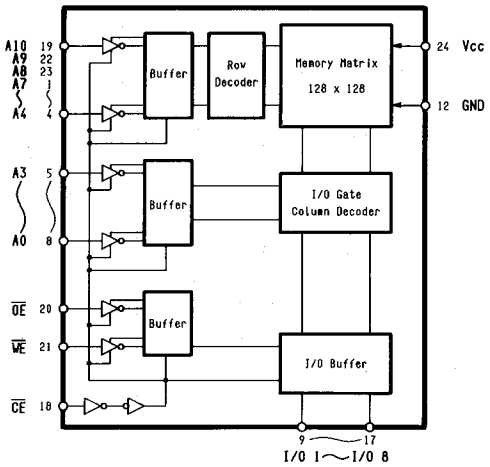

IC201 : YM3815
Microcomputer

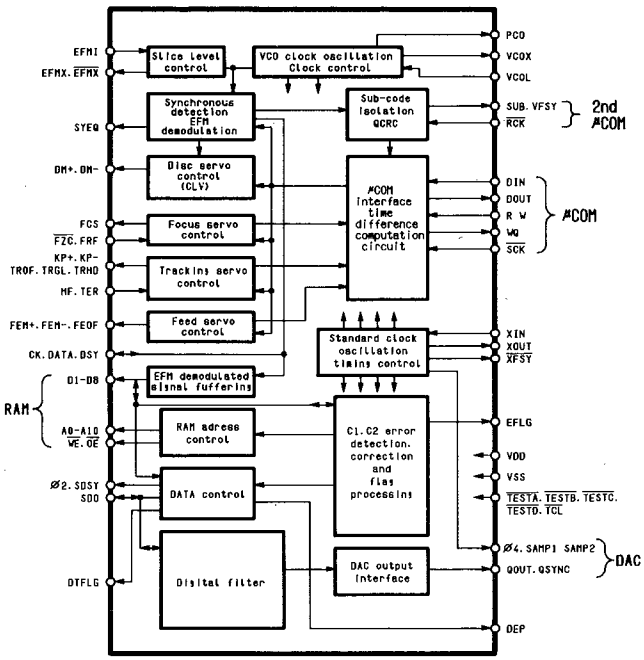

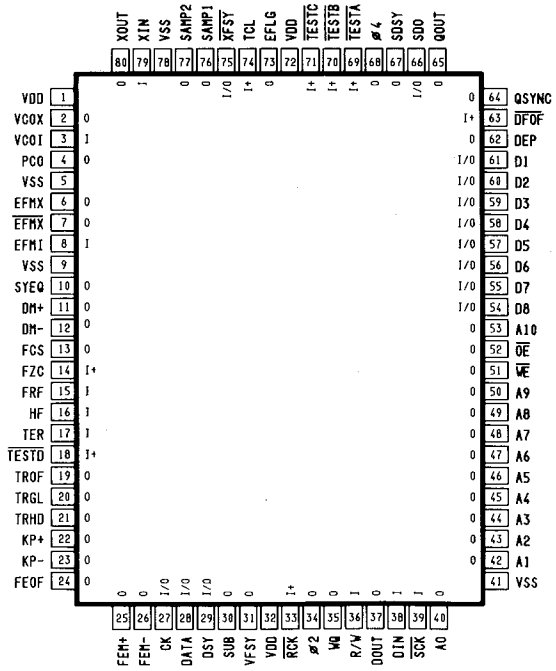

IC203 : NJM2068SD
Dual Operational Amplifier

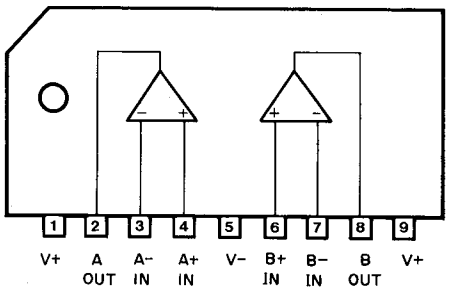

IC206 : PCM56P
16 bit Serial Input D/A Converter

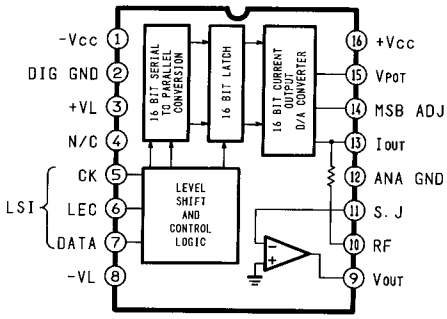

IC207 : HD14053BP
Triple-2 channel Multiplexer

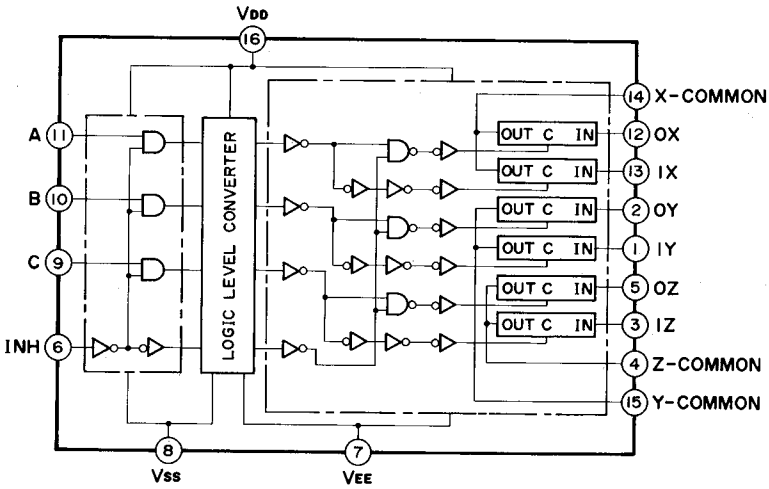

IC402, IC403 : TD62504P
LED Driver

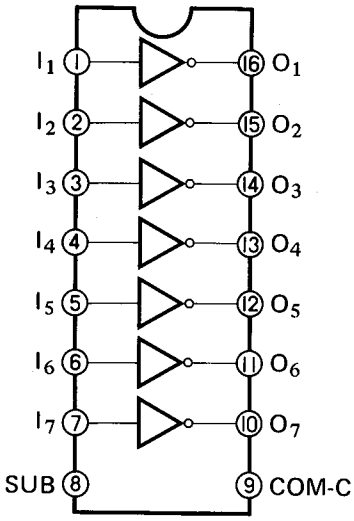

IC401 : μPD75104-20
Microcomputer

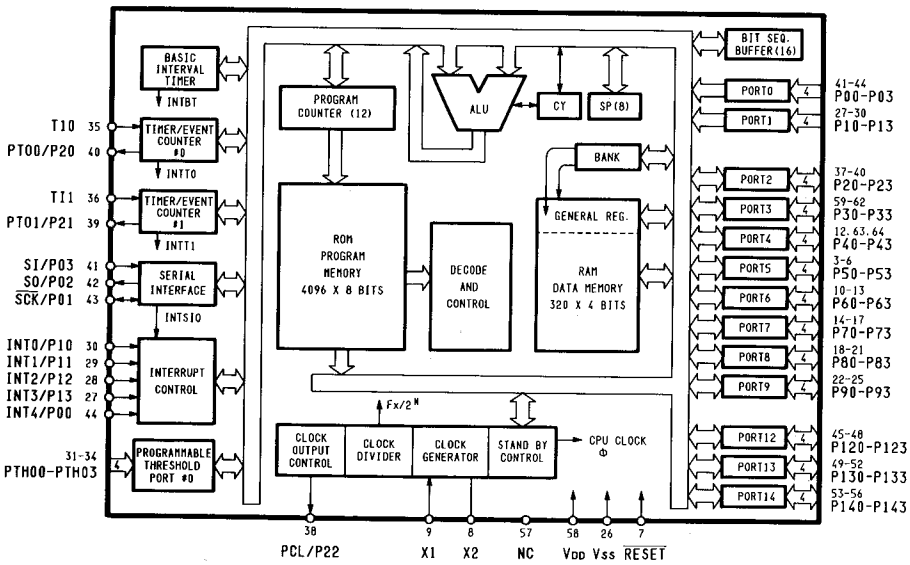

GENERAL UNIT EXPLODED VIEW

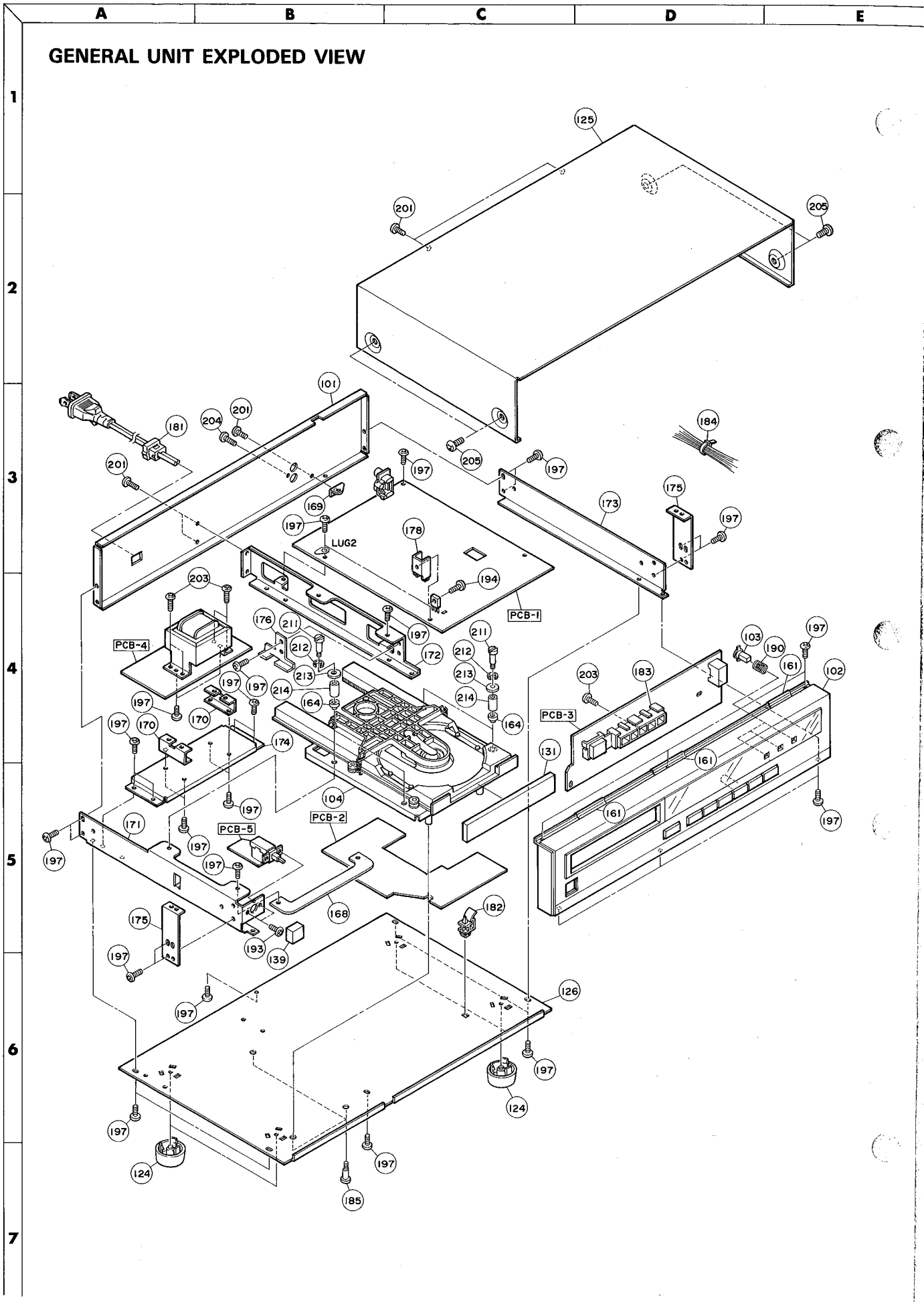

CD PLAYER MECHANISM EXPLODED VIEW

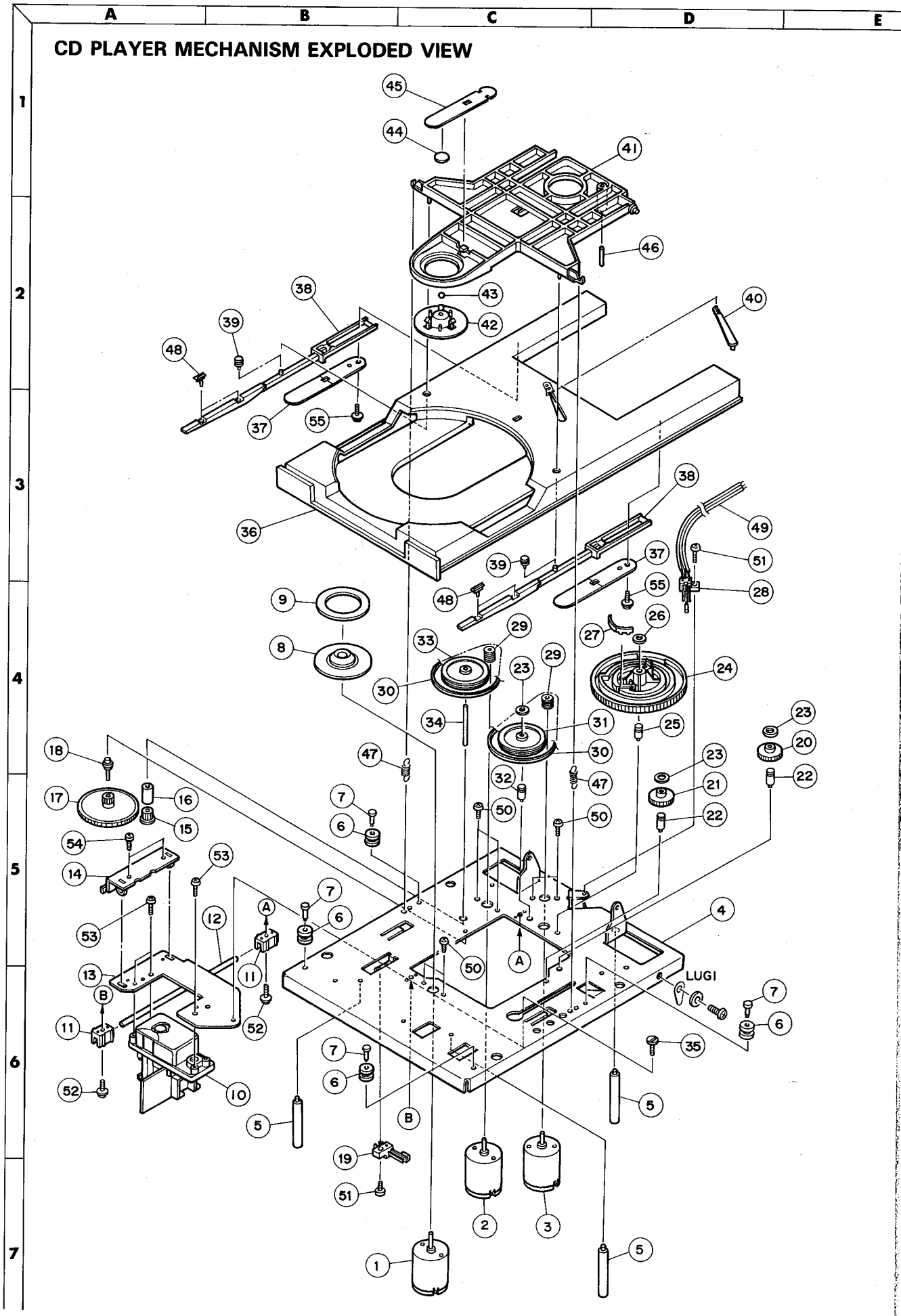

GENERAL UNIT PARTS LIST

Ref. No.	Part No.	Description
101	A424-HD300B	Cabinet Back Ass'y U BK
101	A424-HD300D	Cabinet Back Ass'y G GB
102	A443-HD300A	Front Panel Ass'y U G
102	A443-HD300B	Front Panel Ass'y BK GB
103	A662-HD300A	Push Button Ass'y, Memory, Repeat, A-B Repeat U G
103	A662-HD300B	Push Button Ass'y, Memory, Repeat, A-B Repeat BK GB
104	C119-HD300A	CD Player Mechanical Ass'y
124	1319-0139	Foot
125	1414-07001	Cabinet Top
126	1424-18901	Cabinet Bottom
131	1452-03701	Lid
139	1660-00401	Push Button, Power U G
139	1660-00403	Push Button, Power BK GB
161	2111-11758	Felt
164	2114-01297	Bushing
168	2219-8139	Bracket
169	2219-8096	Bracket
170	2219-8100	Bracket
171	2219-8105	Bracket
172	2219-8106	Bracket
173	2219-8107	Bracket
174	2219-8108	Bracket
175	2219-8109	Bracket
176	2219-8132	Bracket
178	2222-7194	Heat Sink
181	2240-364	Holder
182	2240-7264	Holder
183	2240-7272	Holder
184	2240-7120	Holder
185	2320-7015	Special Screw
190	2651-210189	Spring
193	2327-300629	Screw (3×6mm)
194	2327-300829	Screw (3×8mm)
197	2347-300626	Screw (3×6mm)
201	2347-300646	Screw (3×6mm)
203	2347-301026	Screw (3×10mm)
204	2347-301046	Screw (3×10mm)
205	2347-400646	Screw (4×6mm)
211	2327-302029	Screw (3×20mm)
212	2412-3022	Spring Washer
213	2401-0343	Washer
214	2132-3014021	Spacer

NOTES

Parts with the following marks are used only in the models intended for particular markets:

- U : U.S.A. model
- BK : U.S.A. model Black Version
- G : General model
- GB : General model Black Version

CD PLAYER MECHANISM PARTS LIST

Ref. No.	Part No.	Description
1	NBS4R-02	Spindle Motor
2	VA611B-06	Feed Motor
3	NBS6B-02	Loading Motor
4	PDC1002	Chassis
5	PDE1005	Chassis Support
6	PDE1010	Roller
7	PDE1007	Roller Shaft
8	PDD1004	Turntable
9	PDE1022	Rubber
10	MLP-3C	Pick-up
11	PDE1011	Support
12	PDE1009	Rack Shaft
13	PDD1001	Pick-up Plate
14	PDD1002	Rack
15	PDE1016	Pinion
16	PDE1001	Bearing
17	PDE1013	Gear
18	PDE1002	Gear Shaft
19	LSA-1123-16-AU	Inner Switch
20	PDE1015	Idler Gear
21	PDE1026	Idler Gear B
22	PDE1024	Idler Gear Shaft
23	PGWP26X060025S	P. Washer
24	PDC1003	Cum Gear
25	PDE1023	Cum Shaft
26	PGWP36X080025S	P. Washer
27	PDE6003	Cum Spring
28	MSW-1585	Open/Close Switch
29	PBE16692	Motor Pulley
30	PDE5001	Belt
31	PDE1019	Gear Pulley
32	PDE1025	Gear Pulley Shaft
33	PDE1018	Pulley
34	PDE1008	Pinion Shaft
35	PDE1029	Guide B
36	PDB2001	Loading Case
37	PDE6001	Lever Spring
38	PDD1003	Lever
39	PDE1028	Rubber Cushion
40	PDE1027	Stopper
41	PDC1001	Press Plate
42	PDD1005	Rotational Press
43	PBE14901	Steel Ball
44	PDE1021	Slider
45	PDE6002	Rotational Press Spring
46	PDE1031	Press Plate Shaft
47	PDE6004	T. Spring
48	PDE1032	Rubber Cushion B
49	PDE3005	Lead Wire
50	PGSP10A2003	P. Screw
51	PGSP10A2605	P. Screw
52	PGSP15A3012	P. Screw
53	PGSP10A2608	P. Screw
54	PGSP10A2005	P. Screw
55	PGSL15A2005	L. Screw

ELECTRICAL PARTS LIST

	Ref. No.	Part No.	Description
		CHASSIS MISCELLANEOUS	
⚠	P1	4161-71151	Power Cord U BK
⚠	P1	4161-7256	Power Cord G GB
	LUG1	4211-4	Lug Terminal
	LUG2	4211-4	Lug Terminal
		PCB-1 MAIN P. C. BOARD	
		RESISTORS	
⚠	R3	5102-1004715	10Ω, 1/4W, FR
⚠	R4	5102-1004715	10Ω, 1/4W, FR
⚠	R11	5102-1004715	10Ω, 1/4W, FR
⚠	R12	5102-1004715	10Ω, 1/4W, FR
⚠	R15	5102-1005117F	10Ω, 1/4W, FR
⚠	R16	5102-1514715	150Ω, 1/4W, FR
⚠	R17	5102-3314715	330Ω, 1/4W, FR
⚠	R18	5102-3314715	330Ω, 1/4W, FR
⚠	R19	5102-3314715	330Ω, 1/4W, FR
⚠	R20	5102-3314715	330Ω, 1/4W, FR
⚠	R215	5102-1014715	100Ω, 1/4W, FR
⚠	R269	5102-4R74715	4.7Ω, 1/4W, FR
		CAPACITORS	
	C6	5345-228D041	2200μF/25V, EC
	C7	5345-228D041	2200μF/25V, EC
	C8	5345-477C041	470μF/16V, EC
	C9	5345-477C041	470μF/16V, EC
	C10	5345-228C041	2200μF/16V, EC
	C11	5345-228C041	2200μF/16V, EC
	C12	5345-227C041	220μF/16V, EC
	C13	5345-227C041	220μF/16V, EC
	C14	5345-108C041	1000μF/16V, EC
	C15	5345-108C041	1000μF/16V, EC
	C16	5345-228C041	2200μF/16V, EC
	C17	5345-228C041	2200μF/16V, EC
	C18	5345-477C041	470μF/16V, EC
	C19	5345-477A041	470μF/6.3V, EC
	C20	5345-108A041	1000μF/6.3V, EC
	C21	5345-227B041	220μF/10V, EC
	C22	5345-227B041	220μF/10V, EC
	C23	5345-227B041	220μF/10V, EC
	C24	5345-227B041	220μF/10V, EC
	C51	5345-227C041	220μF/16V, EC
	C52	5345-475F041	4.7μF/50V, EC
	C53	5345-106C041	10μF/16V, EC
	C201	5345-476C041	47μF/16V, EC
	C203	5345-105F041	1μF/50V, EC
	C204	5345-477A041	470μF/6.3V, EC
	C206	5353-680534	68pF/500V, MC
	C207	5342-105F041	1μF/50V, EC
	C208	5345-106C041	10μF/16V, EC
	C211	5359-4715851	470pF/100V, PC
	C212	5359-2215851	220pF/100V, PC
	C213	5359-3325851	3300pF/100V, PC
	C214	5359-1025851	1000pF/100V, PC
	C221	5345-107D041	100μF/25V, EC
	C223	5345-225F041	2.2μF/50V, EC
	C224	5345-107D041	100μF/25V, EC
	C227	5345-476A0951	47μF/6.3V, EC
	C228	5345-476A0951	47μF/6.3V, EC
	C229	5359-3925851	3900pF/100V, PC
	C230	5359-3925851	3900pF/100V, PC
	C233	5345-227C041	220μF/16V, EC
	C234	5345-226C041	22μF/16V, EC
	C235	5345-335D041	3.3μF/25V, EC
	C303	5359-1535851	0.015μF/100V, PC
	C304	5359-1535851	0.015μF/100V, PC
	C305	5359-3315851	330pF/100V, PC
	C306	5359-3315851	330pF/100V, PC
	C307	5359-6815851	680pF/100V, PC
	C308	5359-6815851	680pF/100V, PC
	C309	5345-476C0951	47μF/16V, EC
	C310	5345-476C0951	47μF/16V, EC
	C311	5345-476C0951	47μF/16V, EC
	C312	5345-476C0951	47μF/16V, EC
	C313	5359-1025851	1000pF/100V, PC
	C314	5359-1025851	1000pF/100V, PC
	C315	5359-8225851	8200pF/100V, PC
	C316	5359-8225851	8200pF/100V, PC
	C317	5345-476C0951	47μF/16V, EC
	C318	5345-476C0951	47μF/16V, EC
	C319	5345-476C0951	47μF/16V, EC
	C320	5345-476C0951	47μF/16V, EC
	C321	5345-227C041	220μF/16V, EC
	C322	5345-227C041	220μF/16V, EC
	C323	5345-227C041	220μF/16V, EC
	C324	5345-227C041	220μF/16V, EC
	C424	5345-226C041	22μF/16V, EC
		INTEGRATED CIRCUIT	
	IC201	5654-YM3815	YM3815
	IC202	5654-CXK5816M	CXK5816M-15L
	IC203	5653-NJ2068SD	NJM2068SD
	IC204	5652-M5218L	M5218L
	IC205	5652-M5218L	M5218L
	IC206	5654-PCM56P	PCM56P
	IC207	5654-HD14053B	HD14053BP
	IC208	5652-M5218L	M5218L
	IC401	5654-75104-20	μPD75104-20
	IC402	5654-TD62504P	TD62504P
	IC403	5654-TD62504P	TD62504P
		TRANSISTORS	
	Q1	5611-966(Y)	2SA966(Y)
	Q2	5613-2236(Y)	2SC2236(Y)
	Q3	5613-2603(F)	2SC2603(F)
	Q4	5611-1115(F)	2SA1115(F)
	Q5	5613-2236(Y)	2SC2236(Y)
	Q6	5611-966(Y)	2SA966(Y)
	Q7	5613-3422(Y)	2SC3422(Y)
	Q51	5613-2603(F)	2SC2603(F)
	Q52	5613-2603(F)	2SC2603(F)
	Q53	5611-1115(F)	2SA1115(F)
	Q54	5613-2878(B)	2SC2878(B)
	Q55	5613-2878(B)	2SC2878(B)
	Q201	5613-535(B)	2SC535(B)
	Q202	5613-2603(F)	2SC2603(F)
	Q203	5613-2603(F)	2SC2603(F)
	Q204	5613-2603(F)	2SC2603(F)
	Q205	5613-2603(F)	2SC2603(F)
	Q206	5613-2603(F)	2SC2603(F)
	Q207	5613-2603(F)	2SC2603(F)
	Q208	5613-2603(F)	2SC2603(F)
	Q209	5614-667(C)	2SD667(C)
	Q210	5612-647(C)	2SB647(C)
	Q211	5614-667(C)	2SD667(C)
	Q212	5612-647(C)	2SB647(C)
	Q213	5614-667(C)	2SD667(C)
	Q214	5612-647(C)	2SB647(C)
	Q215	5613-2603(F)	2SC2603(F)
	Q218	5611-1115(F)	2SA1115(F)
	Q219	5613-RN1203	RN1203
	Q221	5613-RN1203	RN1203
	Q222	5611-966(Y)	2SA966(Y)
	Q223	5611-1115(F)	2SA1115(F)
	Q301	5611-1115(F)	2SA1115(F)
	Q302	5611-1115(F)	2SA1115(F)
	Q303	5613-2603(F)	2SC2603(F)
	Q304	5613-2603(F)	2SC2603(F)
	Q305	5611-1115(F)	2SA1115(F)
	Q306	5611-1115(F)	2SA1115(F)
	Q307	5613-2603(F)	2SC2603(F)
	Q308	5613-2603(F)	2SC2603(F)
	Q309	5613-2878(B)	2SC2878(B)

Ref. No.	Part No.	Description
Q310	5613-2878(B)	2SC2878(B)
Q421	5613-2603(F)	2SC2603(F)
Q422	5613-2603(F)	2SC2603(F)
	DIODES	
D1	5632-S5277B-6	S5277B
D2	5632-S5277B-6	S5277B
D3	5632-S5277B-6	S5277B
D4	5632-S5277B-6	S5277B
D5	5632-S5277B-6	S5277B
D6	5632-S5277B-6	S5277B
D7	5632-S5277B-6	S5277B
D8	5632-S5277B-6	S5277B
D9	5635-HZ16-1L	ZD, HZ16-1L
D10	5635-HZ16-1L	ZD, HZ16-1L
D11	5635-HZ12C1L	ZD, HZ12C1L
D12	5635-HZ12C1L	ZD, HZ12C1L
D13	5635-HZ6B1L	ZD, HZ6B1L
D14	5635-HZ9A1L	ZD, HZ9A1L
D15	5635-HZ9A1L	ZD, HZ9A1L
D16	5635-HZ9A1L	ZD, HZ9A1L
D17	5635-HZ9A1L	ZD, HZ9A1L
D51	5631-1S2473	1S2473
D52	5631-1S2473	1S2473
D53	5631-1S2473	1S2473
D201	5635-HZ9B2L	ZD, HZ9B2L
D202	5633-SVC211SP	SVC211SP
D203	5631-1S2473	1S2473
D204	5631-1S2473	1S2473
D407	5631-1S2473	1S2473
D421	5631-1S2473	1S2473
	COILS	
L201	5923-70134	8μH
	MISCELLANEOUS	
X201	5691-00864317	Crystal Osc.
X401	5693-CSA400MG	Crystal Osc.
J301/ J302	4482-0131	2 Pin Jack, Output
CN201	4443-1101140	Connector, 10 Pos.
CN202	4443-0901140	Connector, 9 Pos.
CN203	4443-0201140	Connector, 2 Pos.
CN204	4443-030185	Connector, 3 Pos.
CN205	4443-030185	Connector, 3 Pos.
CN206	4443-030185	Connector, 3 Pos.
CN207	4443-030185	Connector, 3 Pos.
CN208	4443-040185	Connector, 4 Pos.

PCB-2 SERVO P. C. BOARD

	Ref. No.	Part No.	Description
		RESISTORS	
⚠	R136	5102-4R74715	4.7Ω, 1/4W, FR G GB
⚠	R139	5102-4R74715	4.7Ω, 1/4W, FR G GB
		CONTROLS	
	VR101	5101-10471716	100kΩB
	VR102	5101-10471716	100kΩB
	VR103	5101-10371716	10kΩB
	VR104	5101-10471716	100kΩB
	VR105	5101-10371716	10kΩB
	VR106	5101-47371716	47kΩB
	VR107	5101-47471716	470kΩB
		CAPACITORS	
	C101	5345-107B041	100μF/10V, EC
	C104	5345-107B041	100μF/10V, EC
	C106	5345-226C041	22μF/16V, EC
	C107	5345-226C041	22μF/16V, EC
	C110	5359-6815851	680pF/100V, PC
	C112	5345-476C041	47μF/16V, EC
	C119	5345-107B041	100μF/10V, EC
	C120	5345-226C041	22μF/16V, EC
	C121	5345-226C041	22μF/16V, EC
	C123	5345-226C041	22μF/16V, EC
	C124	5345-226C041	22μF/16V, EC
	C125	5345-227C041	220μF/16V, EC
	C126	5345-227C041	220μF/16V, EC
	C127	5345-227C041	220μF/16V, EC
	C128	5345-227C041	220μF/16V, EC
		INTEGRATED CIRCUITS	
	IC101	5652-M5218L	M5218L
	IC102	5653-M5219L	M5219L
	IC103	5652-M5218L	M5218L
	IC104	5652-M5218L	M5218L
	IC105	5653-STA451C	STA451C
		TRANSISTORS	
	Q101	5613-535(C)	2SC535(C)
	Q102	5613-2603(F)	2SC2603(F)
	Q103	5613-2878(B)	2SC2878(B)
	Q104	5611-1115(F)	2SA1115(F)
	Q105	5613-2878(B)	2SC2878(B)
	Q106	5613-2878(B)	2SC2878(B)
	Q107	5613-2878(B)	2SC2878(B)
		MISCELLANEOUS	
	CN101	4443-0801141	Connector, 8 Pos.
	CN102	4443-0601141	Connector, 6 Pos.
	LCN101	4163-001144	CLW, 11 Pos.
	LCN102	4163-002144	CLW, 9 Pos.
	LCN103	4163-003144	CLW, 2 Pos.
	LCN104	4163-004144	CLW, 6 Pos.
	LCN105	4163-005144	CLW, 7 Pos.

PCB-3 SWITCHES P. C. BOARD

	Ref. No.	Part No.	Description
		CAPACITORS	
	C401	5345-227A041	220μF/6.3V, EC
		DIODES	
	D401	5623-LB402MA4	LED Display, Track Number
	D402	5637-SLV56VC3	L.E.D., SLV56VC3, Red, Memory
	D403	5637-SLV56MC3	L.E.D., SLV56MC3, Green, Disk
	D404	5637-SLV56MC3	L.E.D., SLV56MC3, Green, Play
	D405	5637-SLV56MC3	L.E.D., SLV56MC3, Green, Repeat
	D406	5637-SLV56MC3	L.E.D., SLV56MC3, Green, A-B Repeat
		MISCELLANEOUS	
	RM401	6143-00101	Remote Sensor
	S401	4431-A017240	Push Switch, Open/Close
	S402	4431-A017240	Push Switch, Play/Pause
	S403	4431-A017240	Push Switch, Stop/Clear
	S404	4431-A017240	Push Switch, Skip (Backward)
	S405	4431-A017240	Push Switch, Skip (Forward)
	S406	4431-A017240	Push Switch, Reverse
	S407	4431-A017240	Push Switch, Fast-Forward
	S408	4431-A017240	Push Switch, Memory
	S409	4431-A017240	Push Switch, Repeat
	S410	4431-A017240	Push Switch, A-B Repeat

PCB-4 POWER SUPPLY P. C. BOARD

	Ref. No.	Part No.	Description
⚠	T1	5584-701523	Power Transformer U BK
⚠	T1	5584-702523	Power Transformer G GB
⚠	S2	4411-1047111	Rotary Switch, Voltage Selector G GB

Ref. No.	Part No.	Description
		PCB-5 POWER SWITCH P. C. BOARD
⚠ R1	5135-335J50P	Resistor, 3.3MΩ, 1/2W, CAR G GB
⚠ C1	5361-1030419	Capacitor, 0.01μF/AC125V, CC U BK
⚠ C1	5352-1030958	Capacitor, 0.01μF/AC250V, MPC G GB
⚠ S1	4431-A01056	Push Switch, Power

⚠ SAFETY RELATED COMPONENT. USE ONLY EXACT REPLACEMENT PART AS SPECIFIED.

NOTES

Parts with the following marks are used only in the models intended for particular markets:

- U : U.S.A. model
- BK : U.S.A. model Black Version
- G : General model
- GB : General model Black Version

KEY TO ABBREVIATIONS

FR : Fuse Resistor
MR : Metal Resistor
CR : Cement Resistor
CAR : Carbon Resistor
EC : Electrolytic Capacitor
PC : Polypropylene Capacitor
MC : Mica Capacitor
CC : Ceramic Capacitor
MPC : Metalized Polyester Capacitor
SPC : Special Capacitor
ZD : Zener Diode
CLW : Connector with Lead Wire

PACKAGE

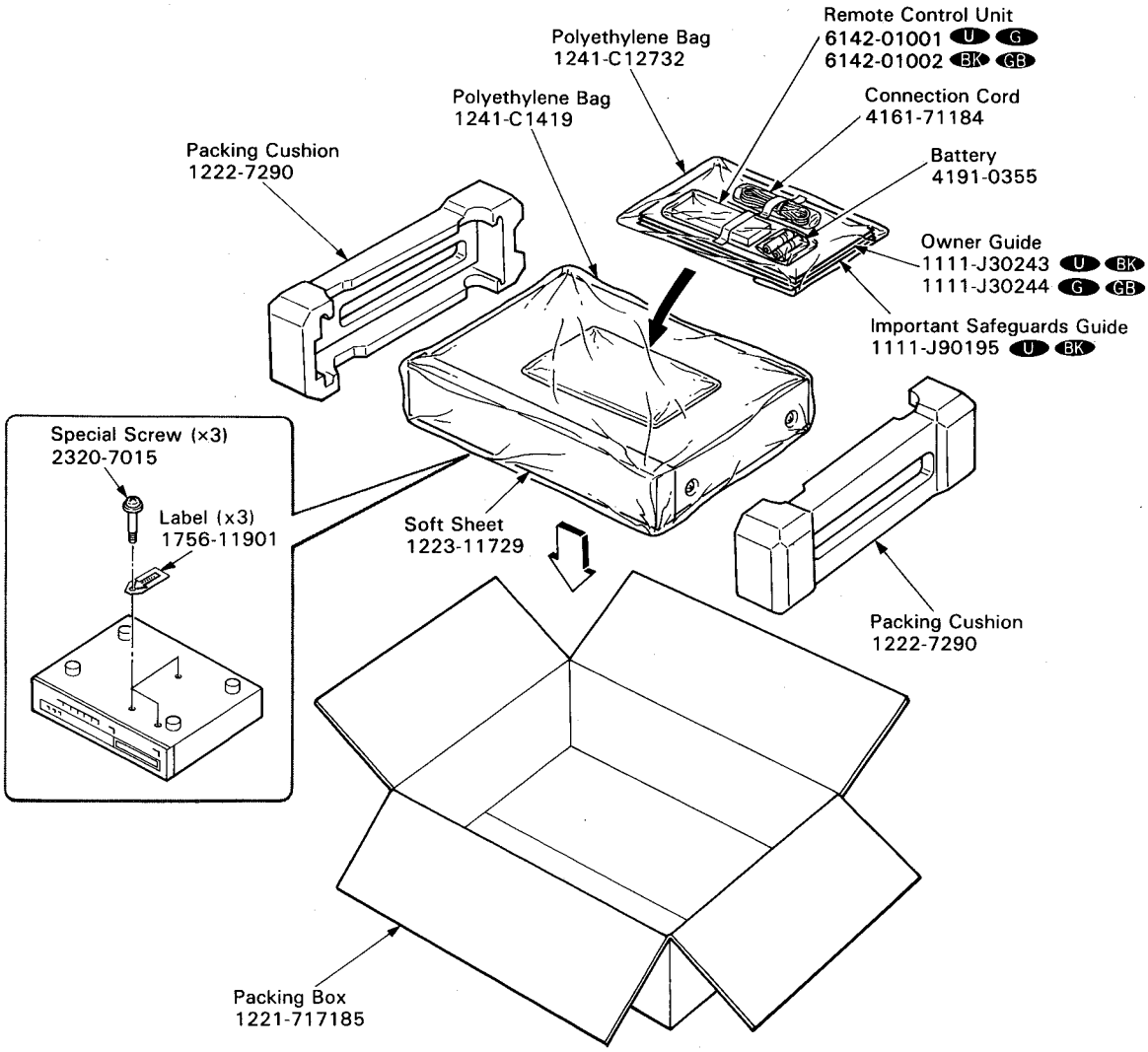

P. C. BOARDS (1)

PCB-2 Servo P. C. Board

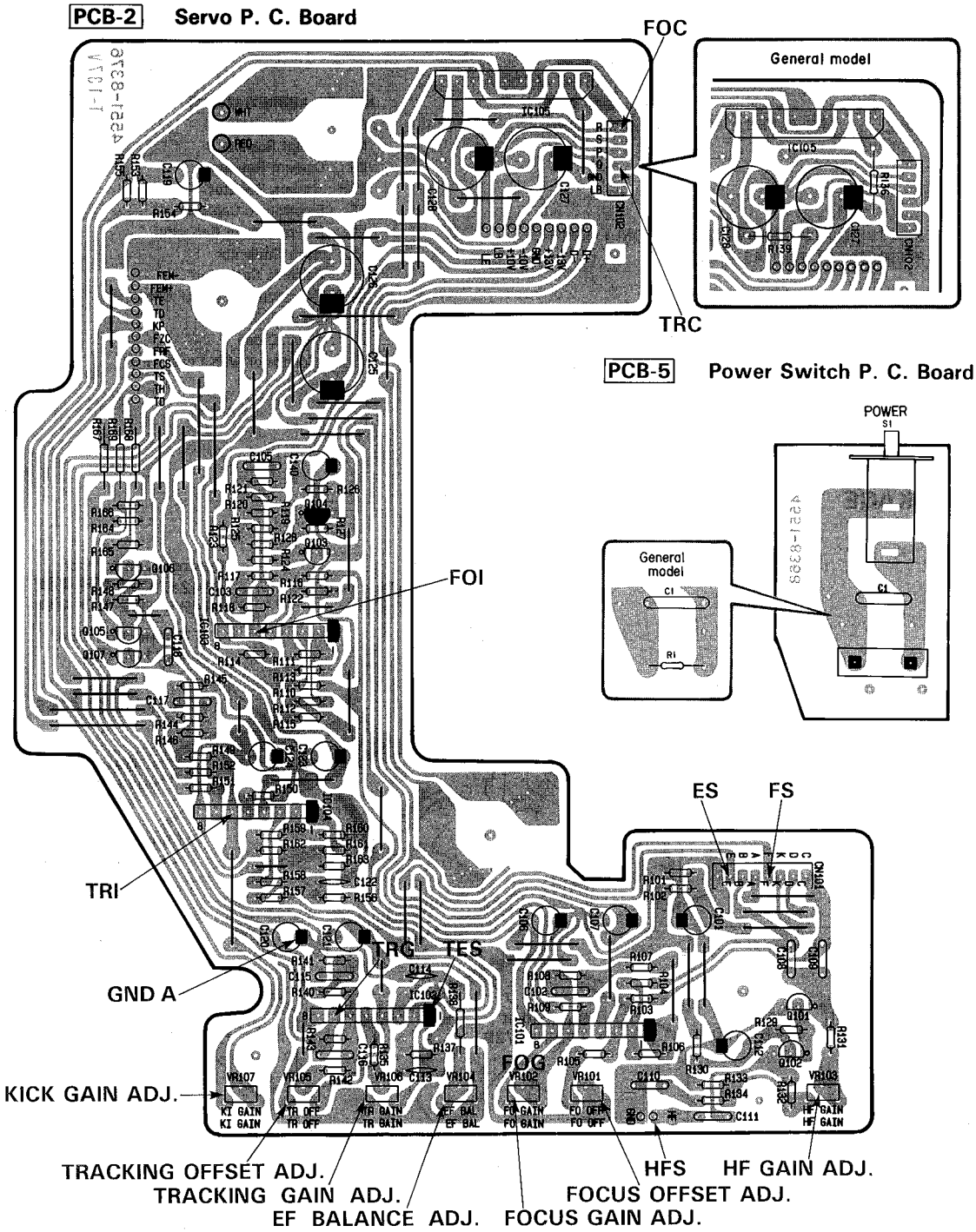

NOTE:
In the figures of the P. C. Boards, a mark is provided on the base side of the transistor.

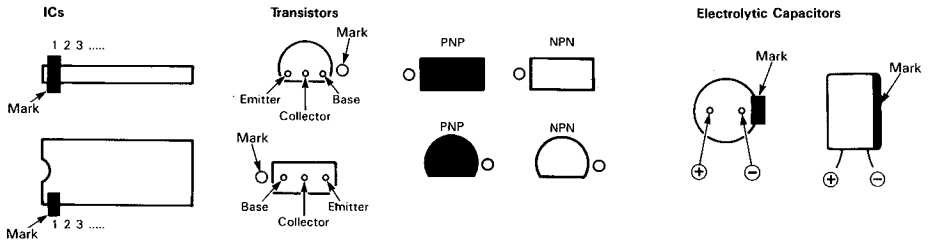

P. C. BOARDS (2)

PCB-1 Main P. C. Board

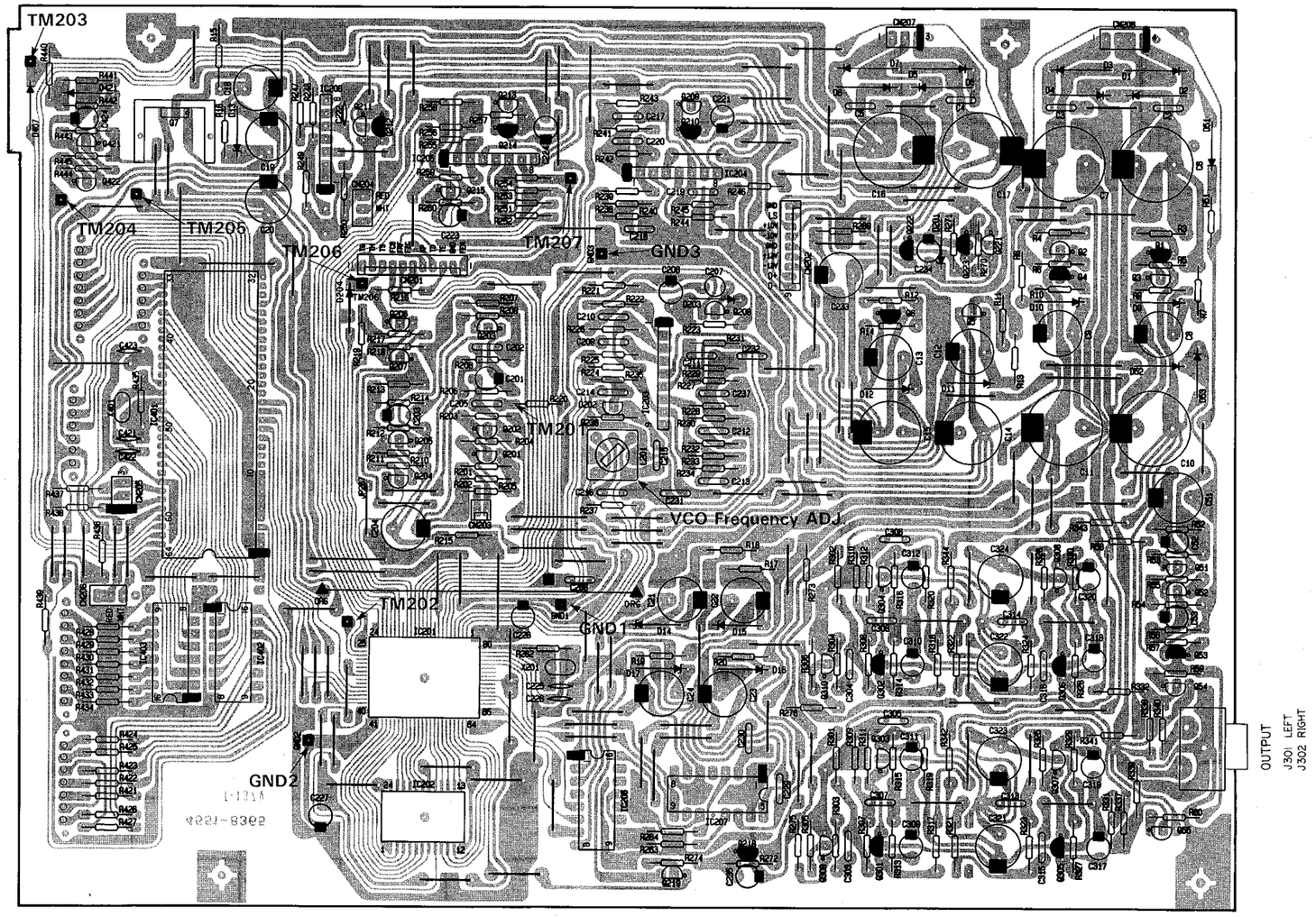

PCB-3 Switches P. C. Board

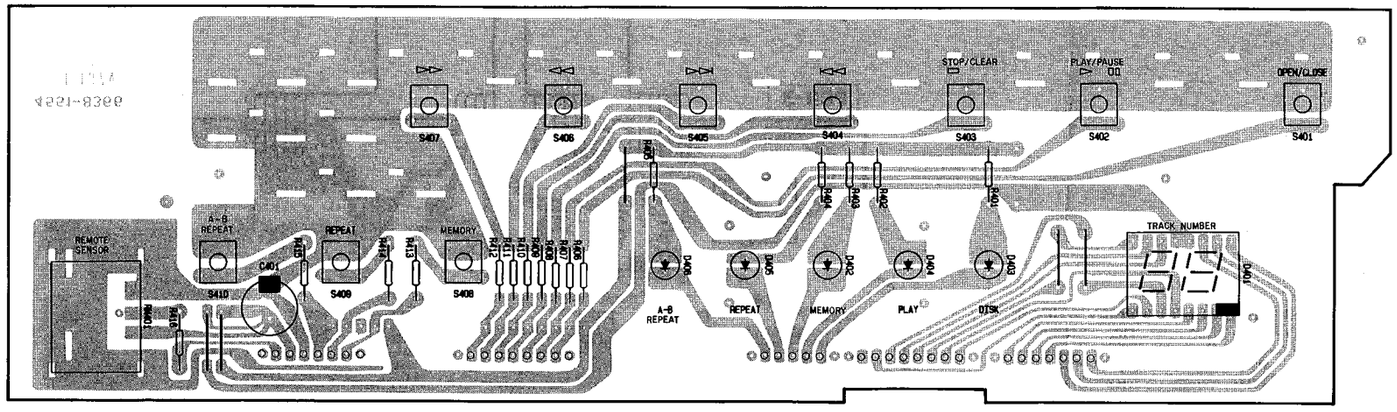

PCB-4 Power Supply P. C. Board

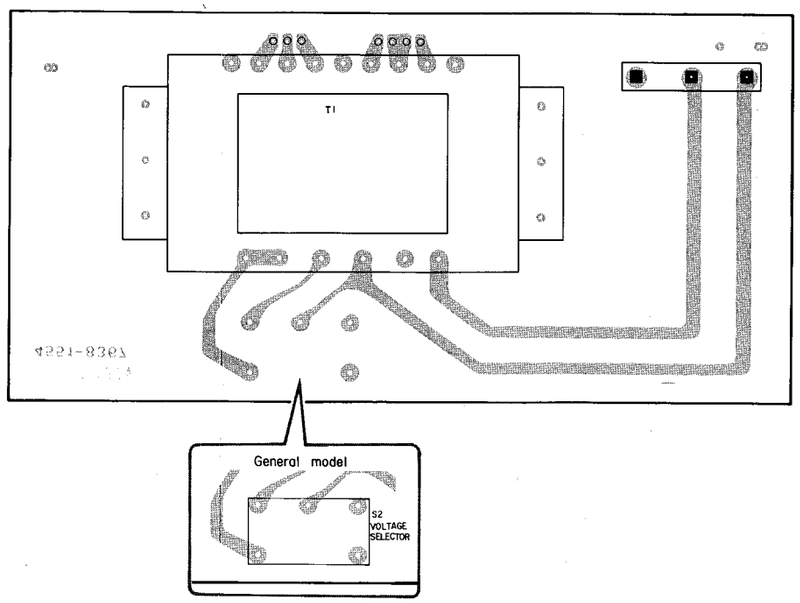

PIN CONNECTION DIAGRAM OF TRANSISTORS, DIODES AND ICS

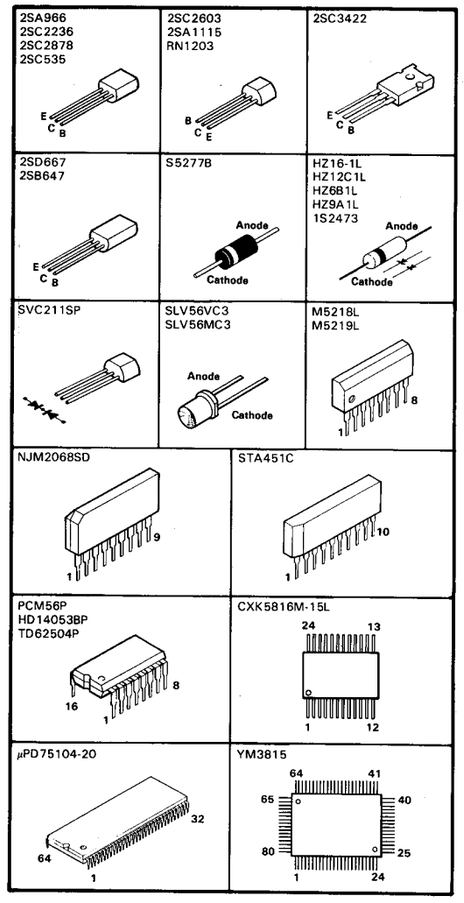

P. C. BOARDS (2)

PCB-1 Main P. C. Board

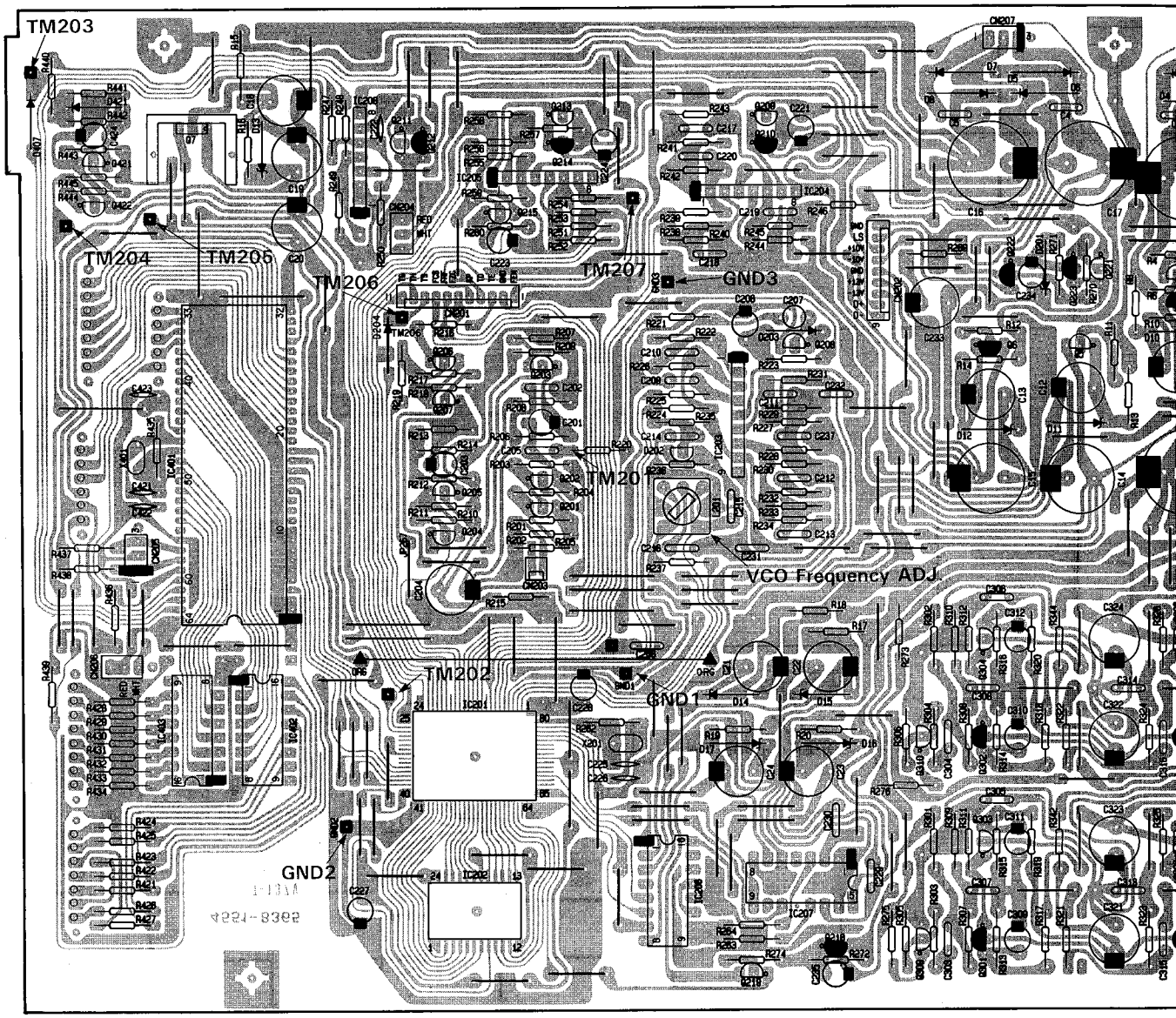

PCB-3 Switches P. C. Board

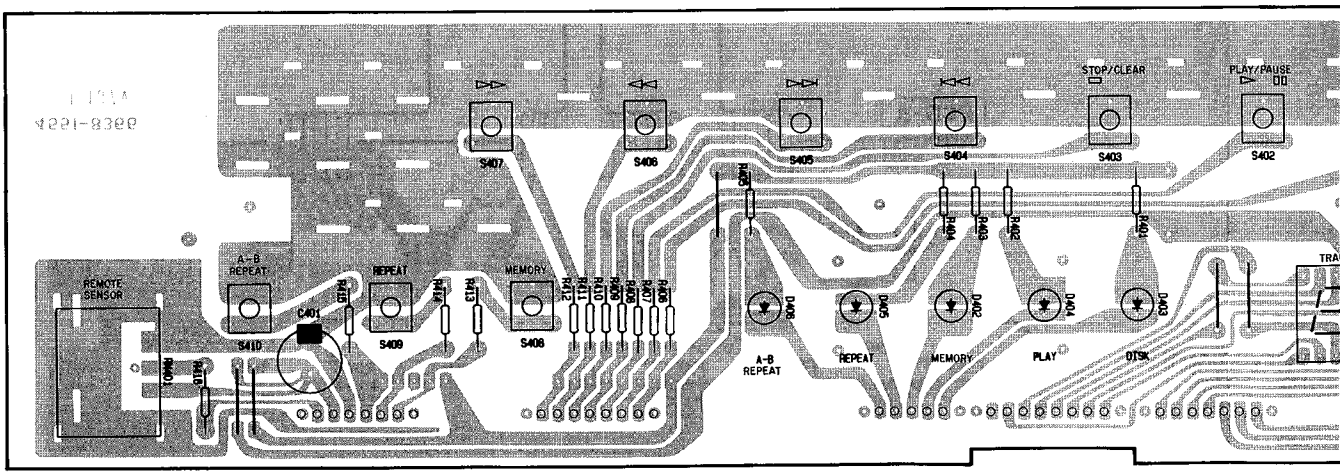

E	F	G	H	I	J

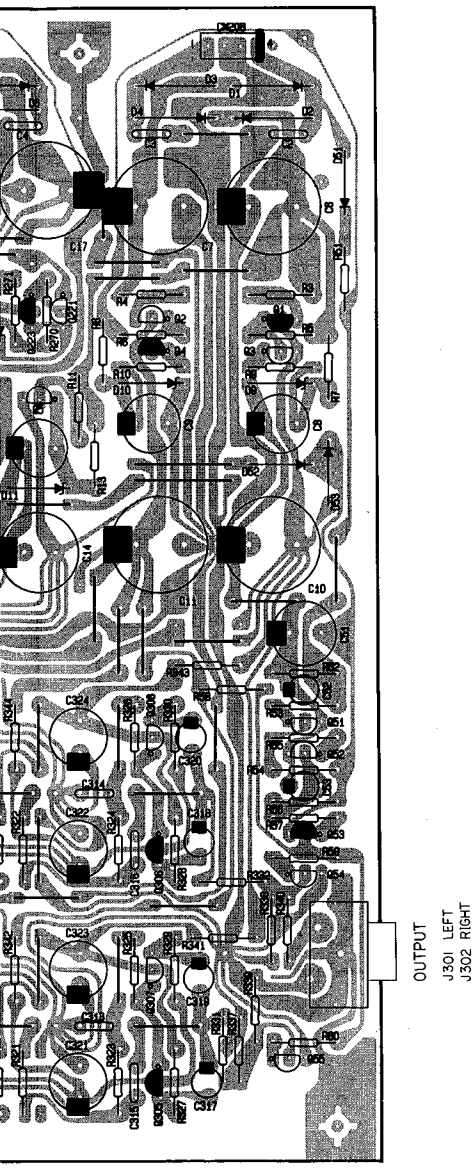

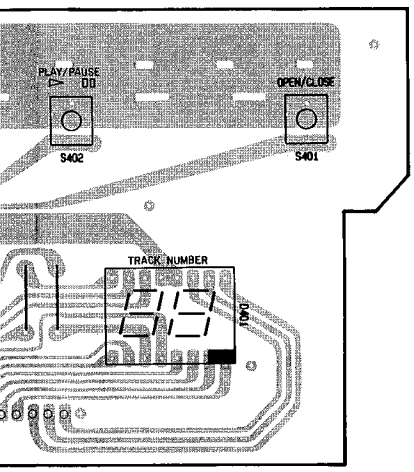

PCB-4 Power Supply P. C. Board

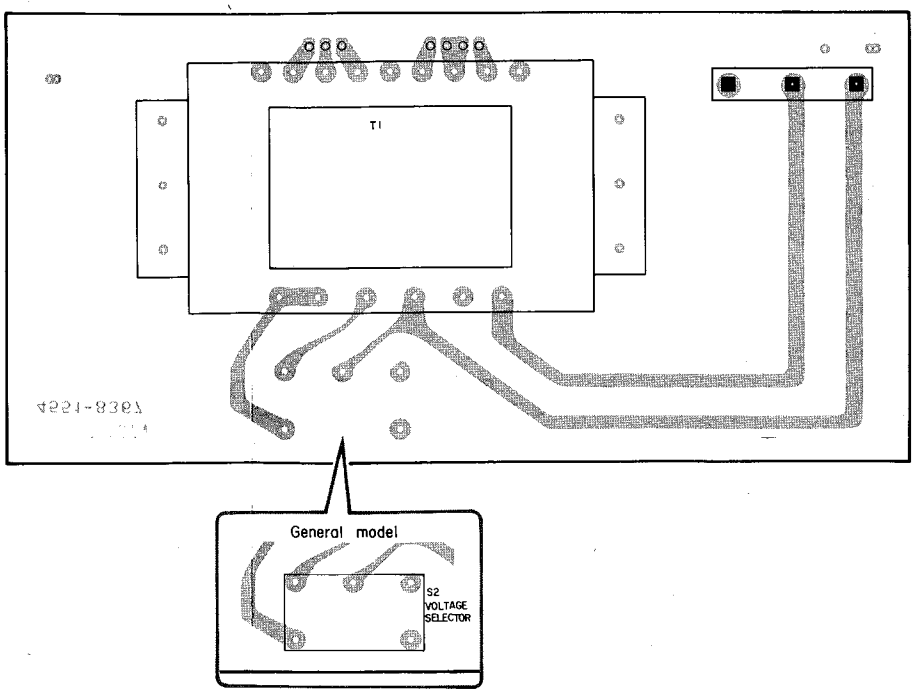

PIN CONNECTION DIAGRAM OF TRANSISTORS, DIODES AND ICS

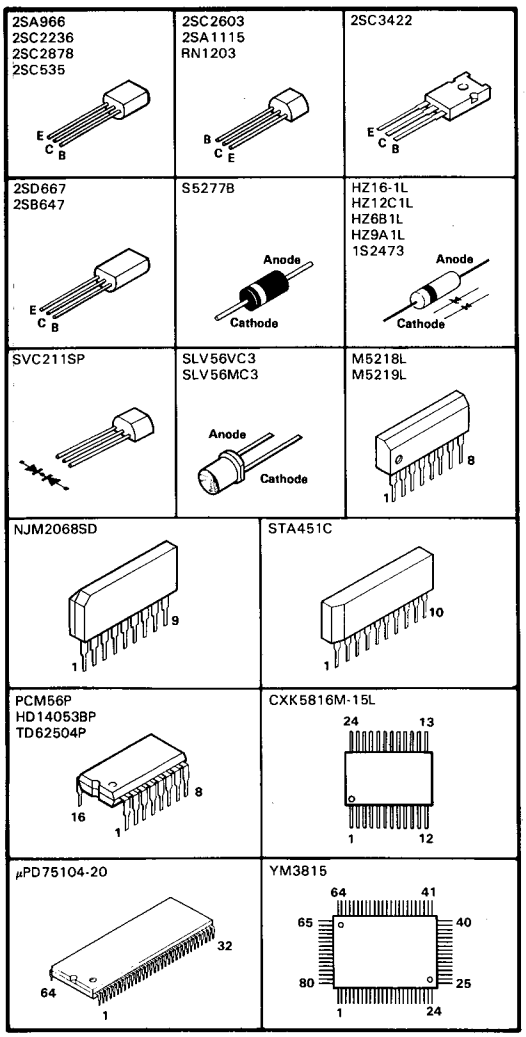

WIRING DIAGRAM

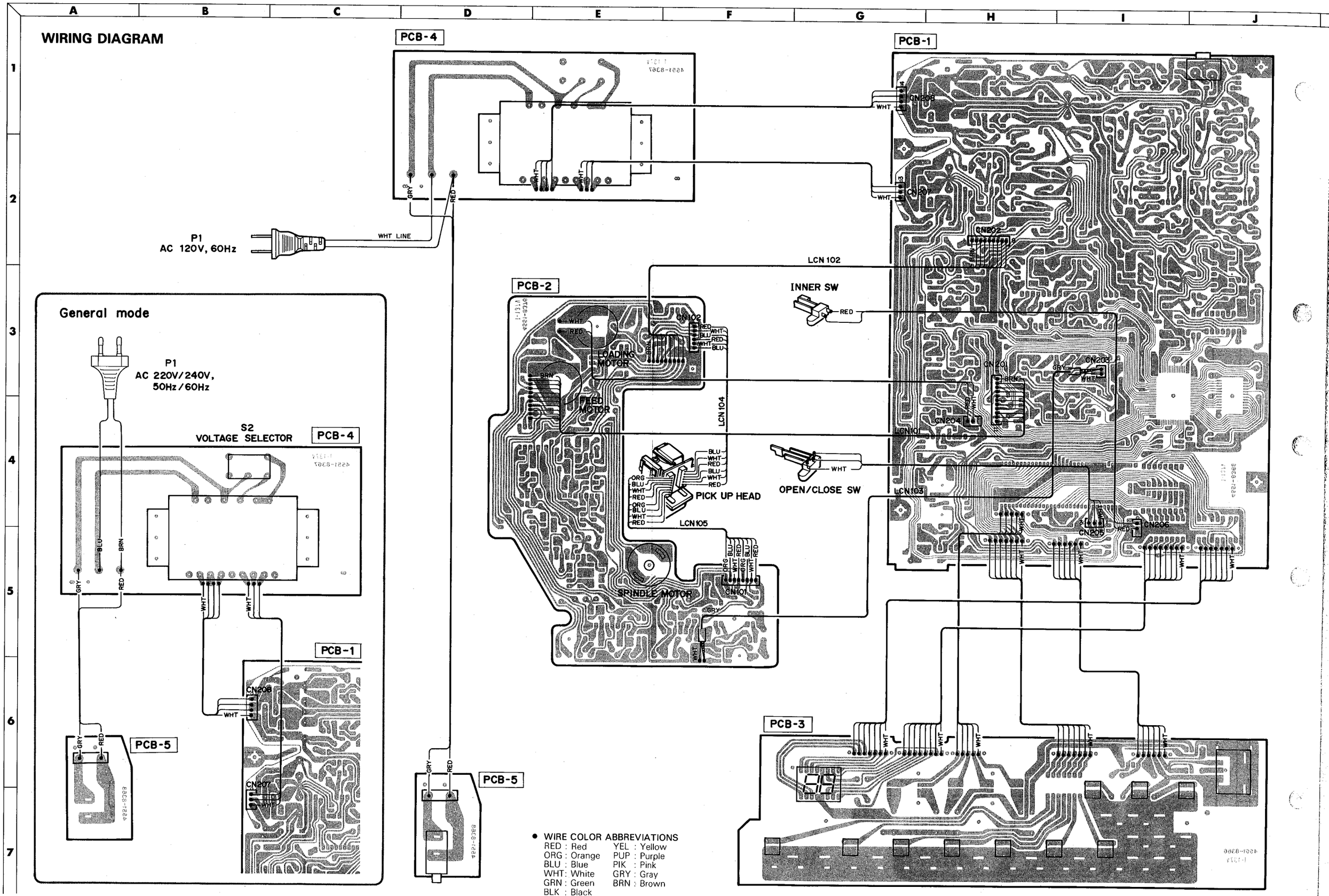

- WIRE COLOR ABBREVIATIONS

RED : Red	YEL : Yellow
ORG : Orange	PUP : Purple
BLU : Blue	PIK : Pink
WHT: White	GRY : Gray
GRN : Green	BRN : Brown
BLK : Black	

WIRING DIAGRAM

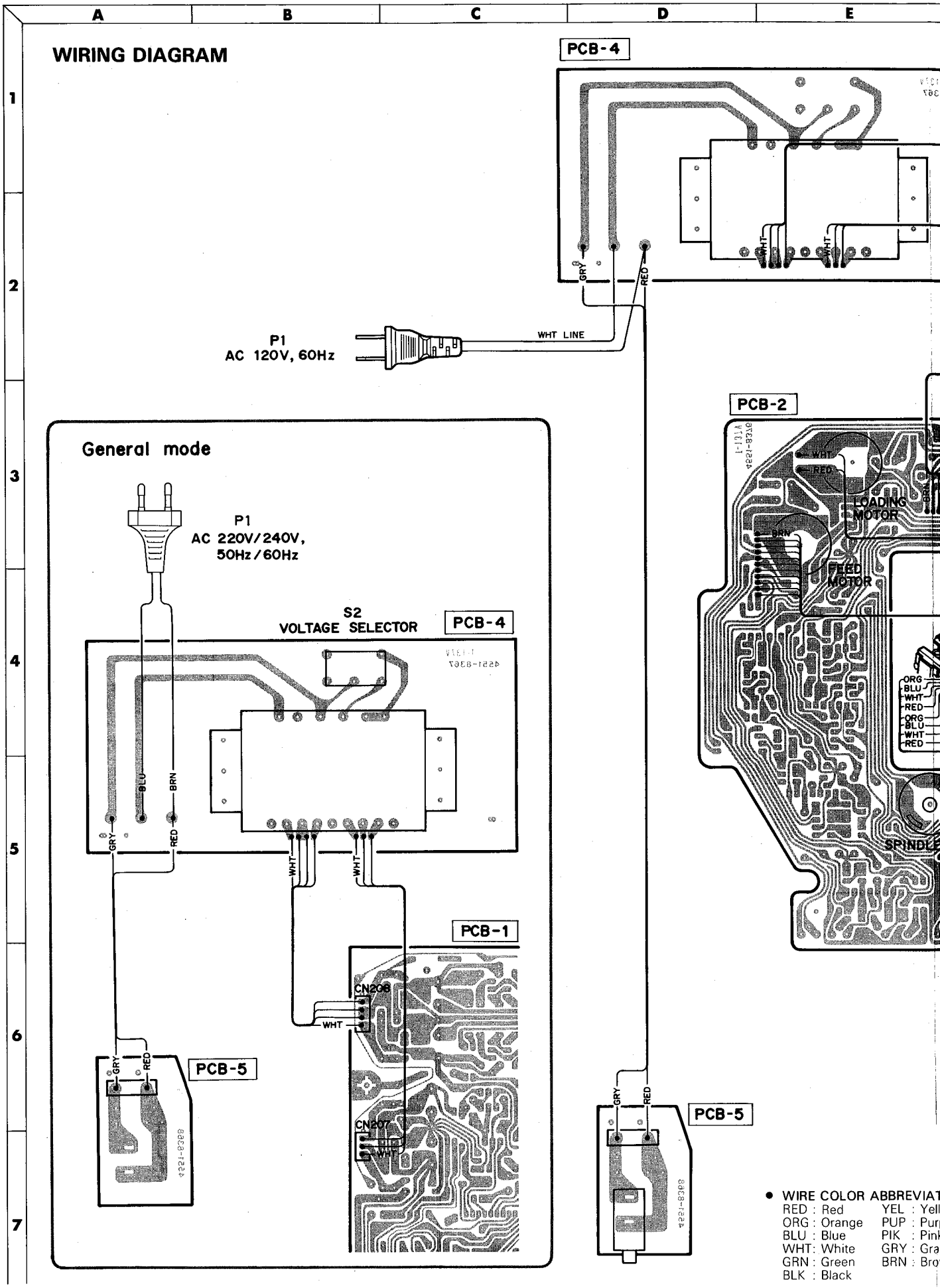

- WIRE COLOR ABBREVIAT

RED	: Red	YEL	: Yell
ORG	: Orange	PUP	: Pur
BLU	: Blue	PIK	: Pink
WHT	: White	GRY	: Gra
GRN	: Green	BRN	: Bro
BLK	: Black		

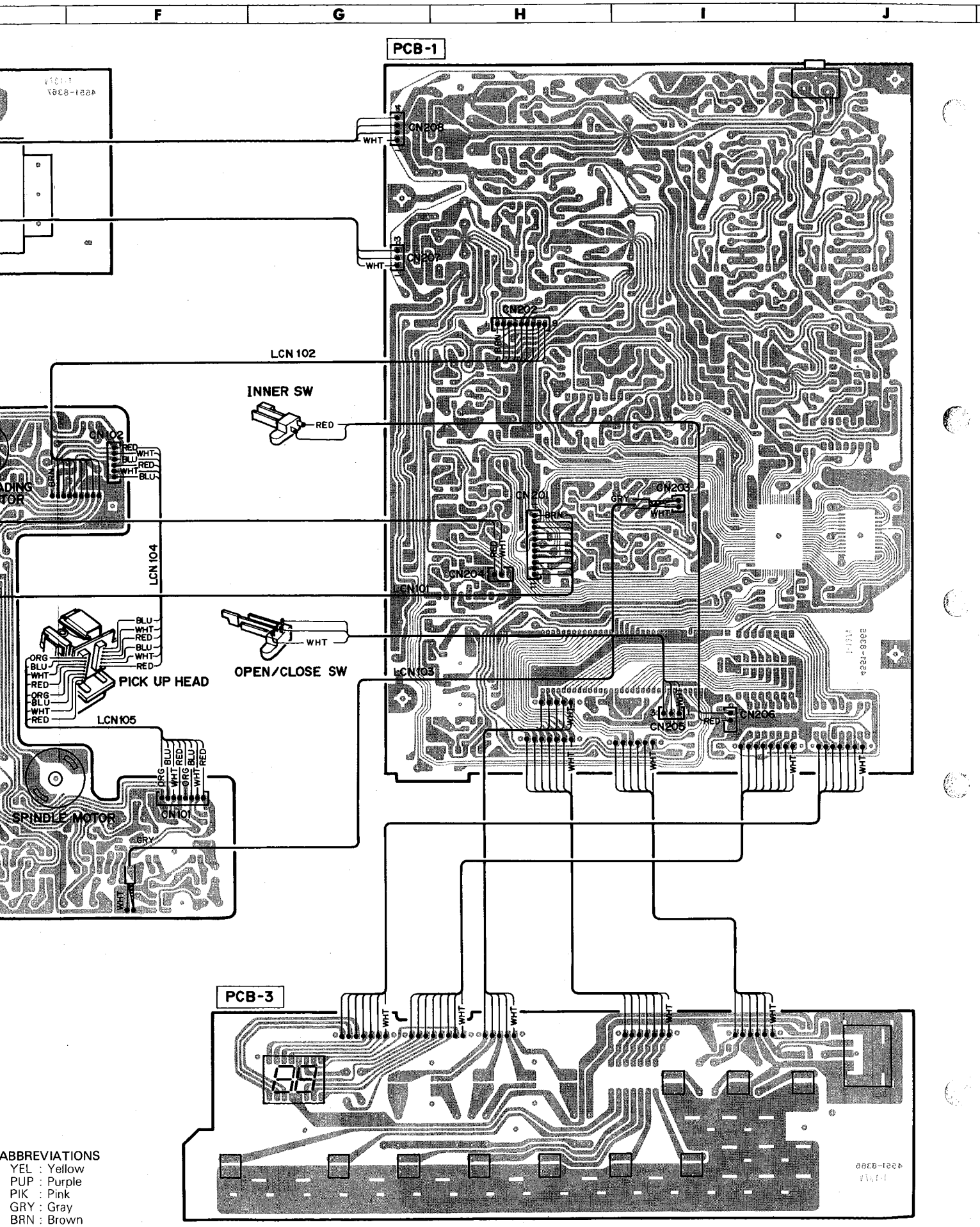

ABBREVIATIONS
YEL : Yellow
PUP : Purple
PIK : Pink
GRY : Gray
BRN : Brown

SCHEMATIC DIAGRAM

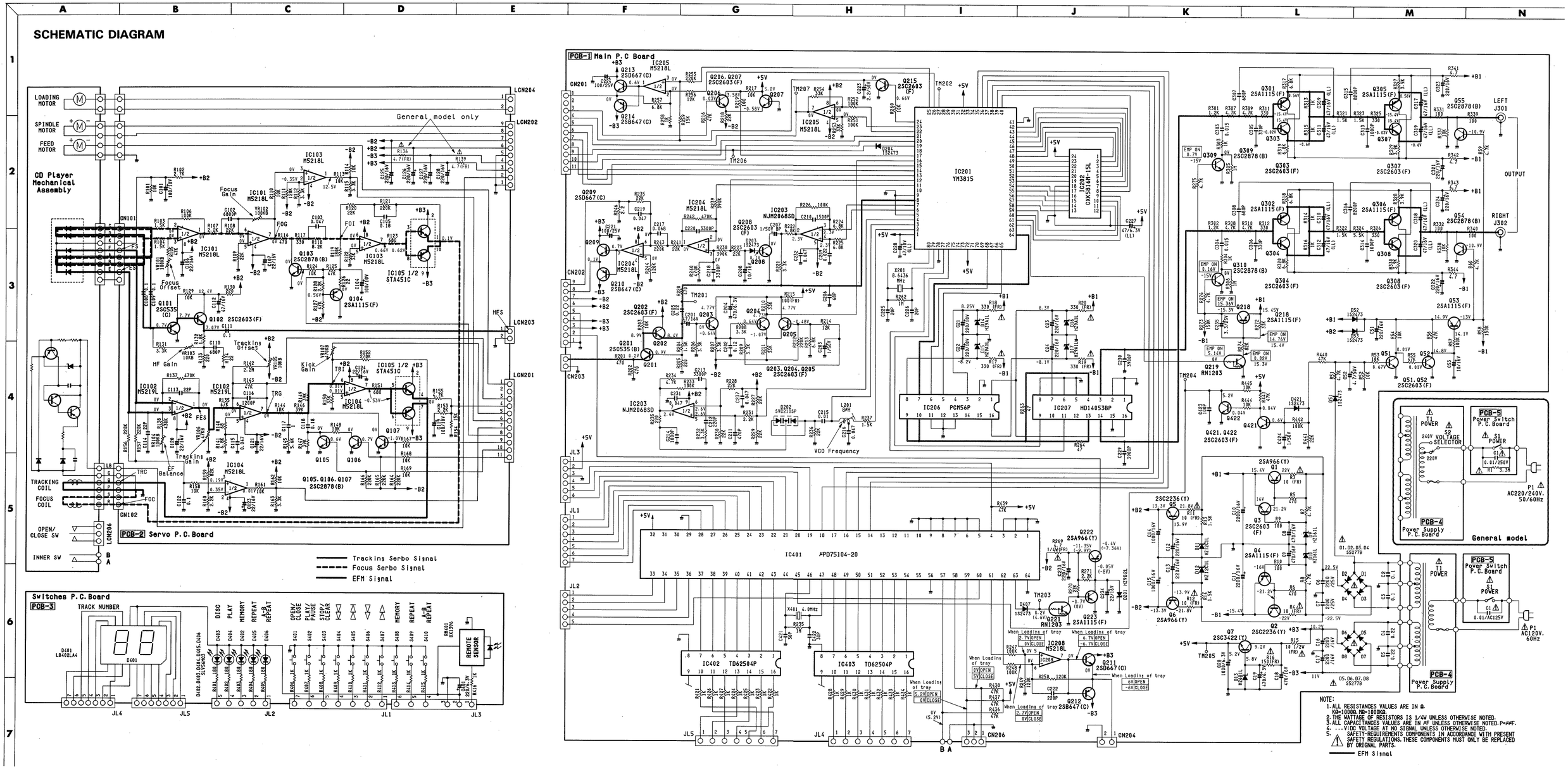

SCHEMATIC DIAGRAM

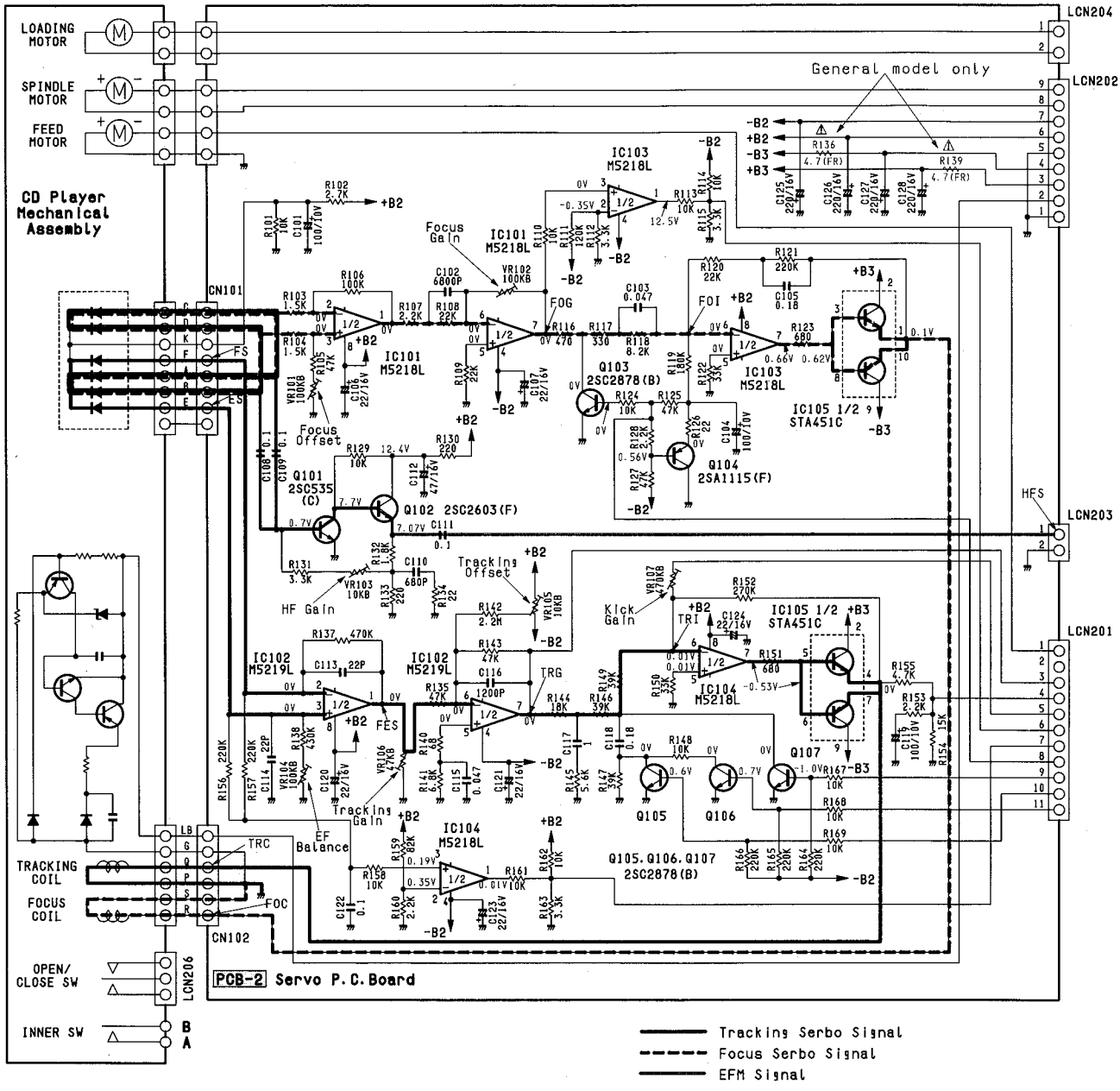

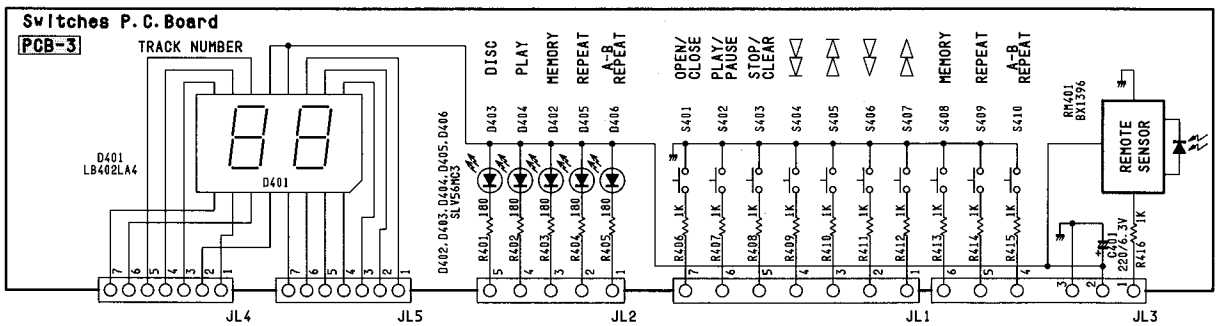

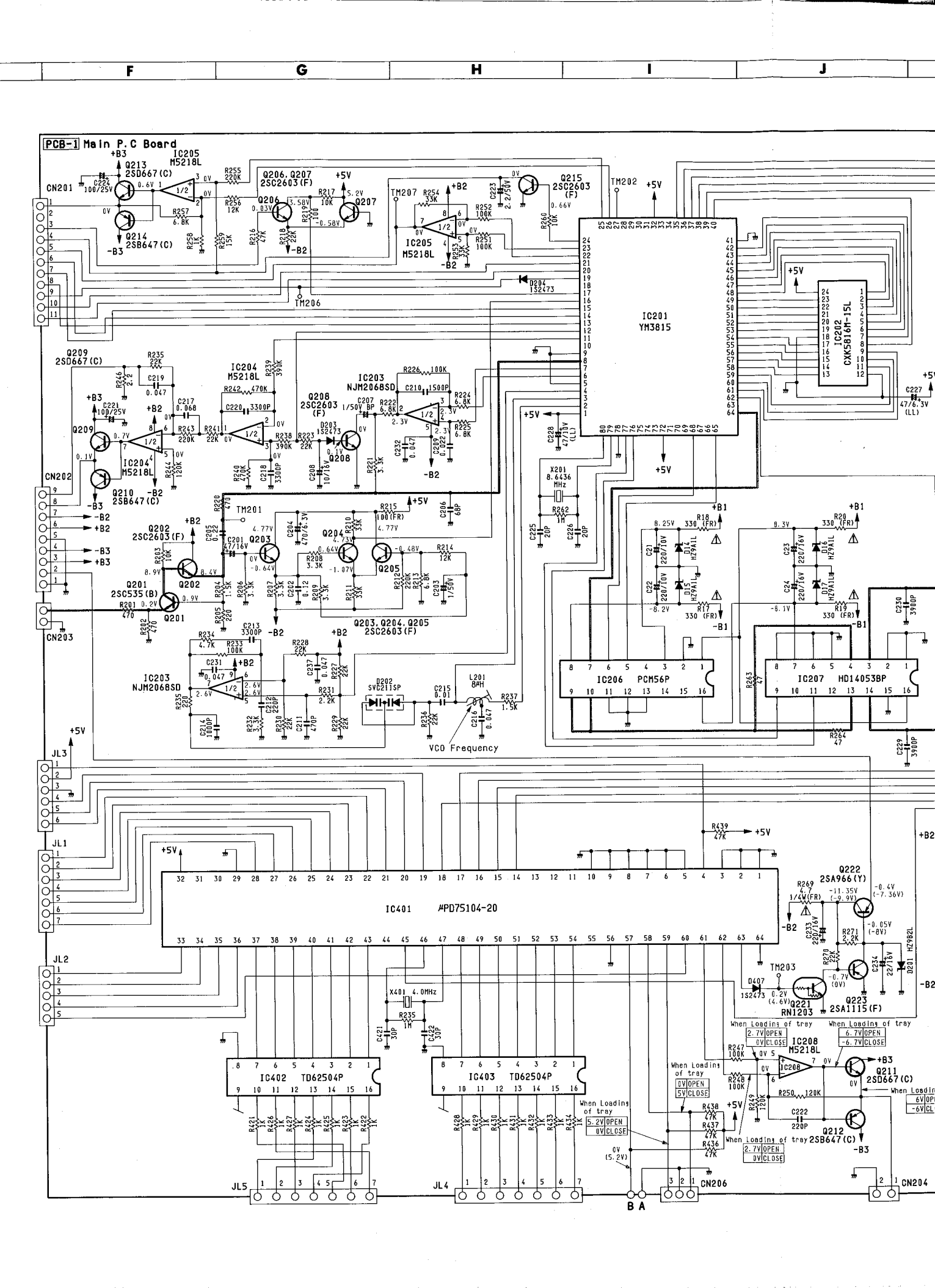
F
G
H
I
J
PCB-1 Main P.C Board
IC201 YM3815
IC202 CXK5816M-15L
IC203 NJM2068SD
IC204 M5218L
IC205 M5218L
IC206 PCM56P
IC207 HD14053BP
IC208 M5218L
IC401 μPD75104-20
IC402 TD62504P
IC403 TD62504P
VCO Frequency
CN201
CN202
CN203
CN204
CN206
JL1
JL2
JL3
JL4
JL5
TM201
TM202
TM203
TM206
TM207

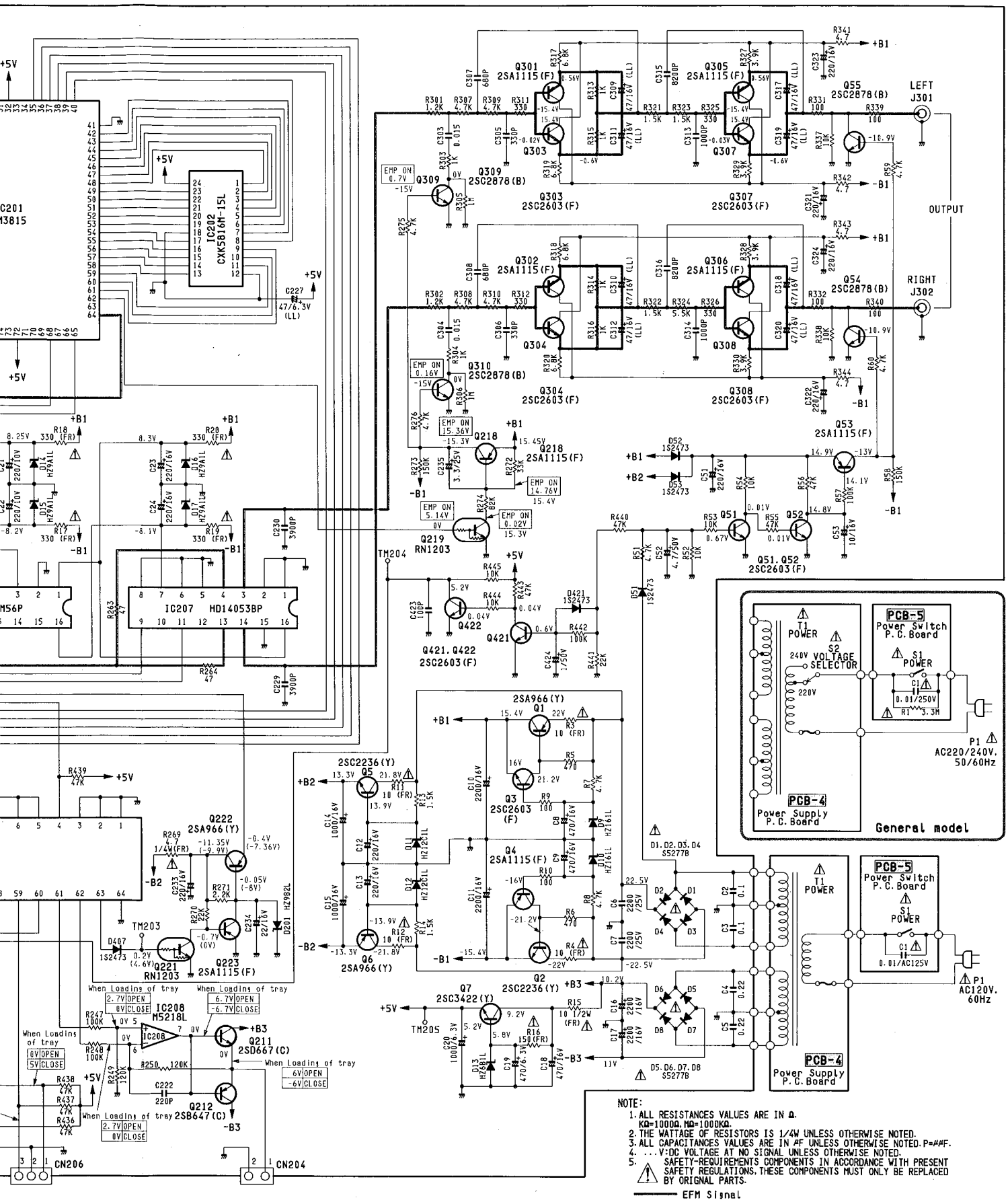

NOTE:
1. ALL RESISTANCES VALUES ARE IN Ω.
KΩ=1000Ω, MΩ=1000KΩ.
2. THE WATTAGE OF RESISTORS IS 1/4W UNLESS OTHERWISE NOTED.
3. ALL CAPACITANCES VALUES ARE IN μF UNLESS OTHERWISE NOTED. P=μμF.
4. ...V:DC VOLTAGE AT NO SIGNAL UNLESS OTHERWISE NOTED.
5. ⚠ SAFETY-REQUIREMENTS COMPONENTS IN ACCORDANCE WITH PRESENT SAFETY REGULATIONS. THESE COMPONENTS MUST ONLY BE REPLACED BY ORIGNAL PARTS.

EFM Signal