harman kardon

Model HS100

INTEGRATED HOME THEATER SYSTEM

DVD/ DVD-Audio/DVD±R/RW/CD/CD±R/VCD/SVCD Player
5 X 35W 5.1 CHANNEL A/V RECEIVER

Preliminary Service Manual

- Contents -

SERVICING PRECAUTIONS……..……2
ESD PRECAUTIONS……..……4
SPECIFICATIONS……..……5
PACKAGING/ACCESSORIES……..……6
FRONT PANEL CONTROLS……..……7
INFORMATION DISPLAY……..……8
REAR PANEL CONNECTIONS……..……9
REMOTE CONTROL……..……10
INSTALLATION/CONNECTIONS……..……12
SYSTEM SETUP……..……14
BASIC OPERATION……..……19
BASIC TROUBLESHOOTING GUIDE/RESET……..……20
OVERALL EXPLODED VIEW……..……21
BLOCK DIAGRAM……..……22
HS100 ELECTRICAL PARTS LIST……..……23
HS100 MECHANICAL PARTS LIST……..……30
PCB DRAWINGS……..……32
SEMICONDUCTOR PINOUTS……..……41
SCHEMATICS……..……51

harman/kardon, Inc.
250 Crossways Park Dr.
Woodbury, New York 11797

SERVICING PRECAUTIONS

NOTES REGARDING HANDLING OF THE PICK-UP

1. Notes for transport and storage

1) The pick-up should always be left in its conductive bag until immediately prior to use.
2) The pick-up should never be subjected to external pressure or impact.

Storage in conductive bag

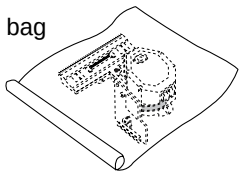

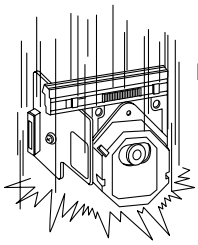

Drop impact

2. Repair notes

1) The pick-up incorporates a strong magnet, and so should never be brought close to magnetic materials.
2) The pick-up should always be handled correctly and carefully, taking care to avoid external pressure and impact. If it is subjected to strong pressure or impact, the result may be an operational malfunction and/or damage to the printed-circuit board.
3) Each and every pick-up is already individually adjusted to a high degree of precision, and for that reason the adjustment point and installation
screws should absolutely never be touched.
4) Laser beams may damage the eyes!
Absolutely never permit laser beams to enter the eyes!
Also NEVER switch ON the power to the laser output part (lens, etc.) of the pick-up if it is damaged.

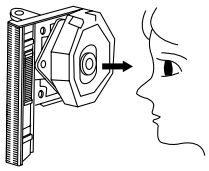

NEVER look directly at the laser beam, and don't let contact fingers or other exposed skin.

5) Cleaning the lens surface
If there is dust on the lens surface, the dust should be cleaned away by using an air bush (such as used for camera lens). The lens is held by a delicate spring. When cleaning the lens surface, therefore, a cotton swab should be used, taking care not to distort this.

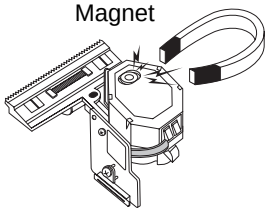

Magnet

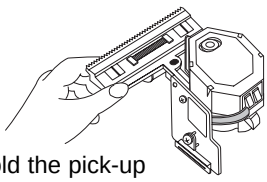

How to hold the pick-up

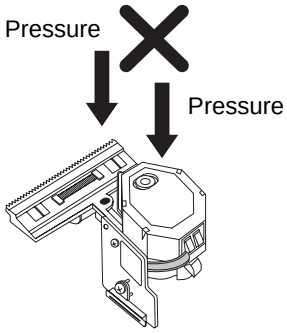

Pressure

Pressure

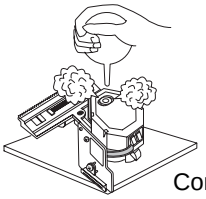

Conductive Sheet

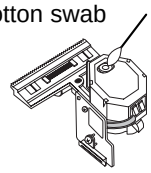

Cotton swab

6) Never attempt to disassemble the pick-up.
Spring by excess pressure. If the lens is extremely dirty, apply isopropyl alcohol to the cotton swab. (Do not use any other liquid cleaners, because they will damage the lens.) Take care not to use too much of this alcohol on the swab, and do not allow the alcohol to get inside the pick-up.

NOTES REGARDING COMPACT DISC PLAYER REPAIRS

1. Preparations

1) Compact disc players incorporate a great many ICs as well as the pick-up (laser diode). These components are sensitive to, and easily affected by, static electricity. If such static electricity is high voltage, components can be damaged, and for that reason components should be handled with care.
2) The pick-up is composed of many optical components and other high-precision components. Care must be taken, therefore, to avoid repair or storage where the temperature of humidity is high, where strong magnetism is present, or where there is excessive dust.

2. Notes for repair

1) Before replacing a component part, first disconnect the power supply lead wire from the unit
2) All equipment, measuring instruments and tools must be grounded.
3) The workbench should be covered with a conductive sheet and grounded.
   When removing the laser pick-up from its conductive bag, do not place the pick-up on the bag. (This is because there is the possibility of damage by static electricity.)
4) To prevent AC leakage, the metal part of the soldering iron should be grounded.
5) Workers should be grounded by an armband (1MΩ)
6) Care should be taken not to permit the laser pick-up to come in contact with clothing, in order to prevent static electricity changes in the clothing to escape from the armband.
7) The laser beam from the pick-up should NEVER be directly facing the eyes or bare skin.

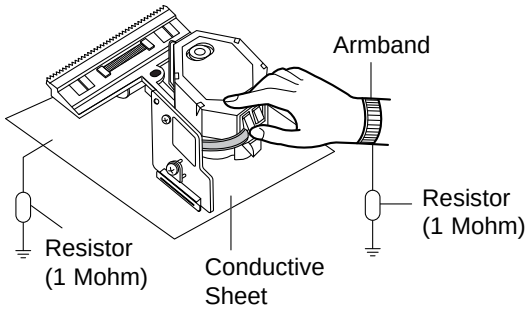

ESD PRECAUTIONS

Electrostatically Sensitive Devices (ESD)

Some semiconductor (solid state) devices can be damaged easily by static electricity. Such components commonly are called Electrostatically Sensitive Devices (ESD). Examples of typical ESD devices are integrated circuits and some field-effect transistors and semiconductor chip components. The following techniques should be used to help reduce the incidence of component damage caused by static electricity.

1. Immediately before handling any semiconductor component or semiconductor-equipped assembly, drain off any electrostatic charge on your body by touching a known earth ground. Alternatively, obtain and wear a commercially available discharging wrist strap device, which should be removed for potential shock reasons prior to applying power to the unit under test.
2. After removing an electrical assembly equipped with ESD devices, place the assembly on a conductive surface such as aluminum foil, to prevent electrostatic charge buildup or exposure of the assembly.
3. Use only a grounded-tip soldering iron to solder or unsolder ESD devices.
4. Use only an anti-static solder removal device. Some solder removal devices not classified as "anti-static" can generate electrical charges sufficient to damage ESD devices.
5. Do not use freon-propelled chemicals. These can generate electrical charges sufficient to damage ESD devices.
6. Do not remove a replacement ESD device from its protective package until immediately before you are ready to install it. (Most replacement ESD devices are packaged with leads electrically shorted together by conductive foam, aluminum foil or comparable conductive materials).
7. Immediately before removing the protective material from the leads of a replacement ESD device, touch the protective material to the chassis or circuit assembly into which the device will by installed.

CAUTION : BE SURE NO POWER IS APPLIED TO THE CHASSIS OR CIRCUIT, AND OBSERVE ALL OTHER SAFETY PRECAUTIONS.

8. Minimize bodily motions when handing unpackaged replacement ESD devices. (Otherwise harmless motion such as the brushing together of your clothes fabric or the lifting of your foot from a carpeted floor can generate static electricity sufficient to damage an ESD device).

HS 100 SPECIFICATIONS

DVD Player

Pickup:	Semiconductor laser, wavelength 650nm
Video signal system:	NTSC
Video signal horizontal resolution:	>480 lines (DVD)
Video signal-to-noise ratio:	>60dB (DVD)
Audio frequency response: (Stereo)	DVD (PCM): 20Hz – 22kHz (±1dB) CD (PCM): 20Hz – 20kHz (±1dB)
Audio signal-to-noise ratio:	>80dB (PCM)
Total harmonic distortion:	<0.01% (PCM)
Dynamic range:	DVD (PCM): >85dB (EIAJ, 2kHz) CD: >85dB (EIAJ)

FM Tuner

System:	PLL quartz-locked digital synthesizer system
Tuning range:	87.50 – 108.00MHz
Antenna terminals:	75 Ohms, unbalanced
Intermediate frequency:	10.7MHz

AM Tuner Section

Frequency range:	520 – 1720kHz
Signal-to-noise ratio:	45dB
Usable sensitivity:	Loop 500µV
Distortion:	1kHz, 50% Mod 0.8%
Selectivity:	±10kHz, 30dB

Video Outputs

Component video output:	Y: 1 Vp-p/75 ohms, sync negative polarity Pr: 0.7 Vp-p/75 ohms Pb: 0.7 Vp-p/75 ohms
Composite video output:	1 Vp-p/75 ohms
S-video output:	Y: 1 Vp-p/75 ohms C: NTSC 0.286 Vp-p/75 ohms

Audio Section

Amplifer power:	35 watts per channel, 20Hz – 20kHz, <0.5% THD into 6 ohms
Line output:	1 Vrms, 1 kilohm

General

Power requirements:	AC 120V, 50Hz
Power consumption:	3W Standby, 380W Maximum
Dimensions (HxWxD):	2-11/16" x 17-15/16" x 2-3/16"
Weight:	10.6 lb

Depth measurement includes knobs, buttons and terminal connections. Height measurement includes feet and chassis.

All features and specifications are subject to change without notice.

Harman Kardon and Power for the Digital Revolution are registered trademarks of Harman International Industries, Incorporated.

Dolby, Pro Logic and the double-D symbol are trademarks of Dolby Laboratories, registered in the United States and/or other countries. All rights reserved.

DTS is a trademark of DTS, Inc.

* Windows Media® Audio (WMA) is a proprietary file format developed by Microsoft. Microsoft, Windows and Windows Media are registered trademarks of Microsoft Corporation in the United States and/or other countries.

This product incorporates copyright protection technology that is protected by method claims of certain U.S. patents and other intellectual property rights owned by Macrovision Corporation and other rights owners. Use of this copyright protection technology must be authorized by Macrovision Corporation and is intended for home and other limited viewing uses only unless otherwise authorized by Macrovision Corporation. Reverse engineering or disassembly is prohibited.

Supplied Accessories

The following accessory items are supplied with the HS 100 controller. If any of these items are missing, please contact Harman Kardon customer service at www.harmankardon.com.

- A system remote control
- An FM wire antenna
- AC power cord
- An AM loop antenna
- Three AAA batteries

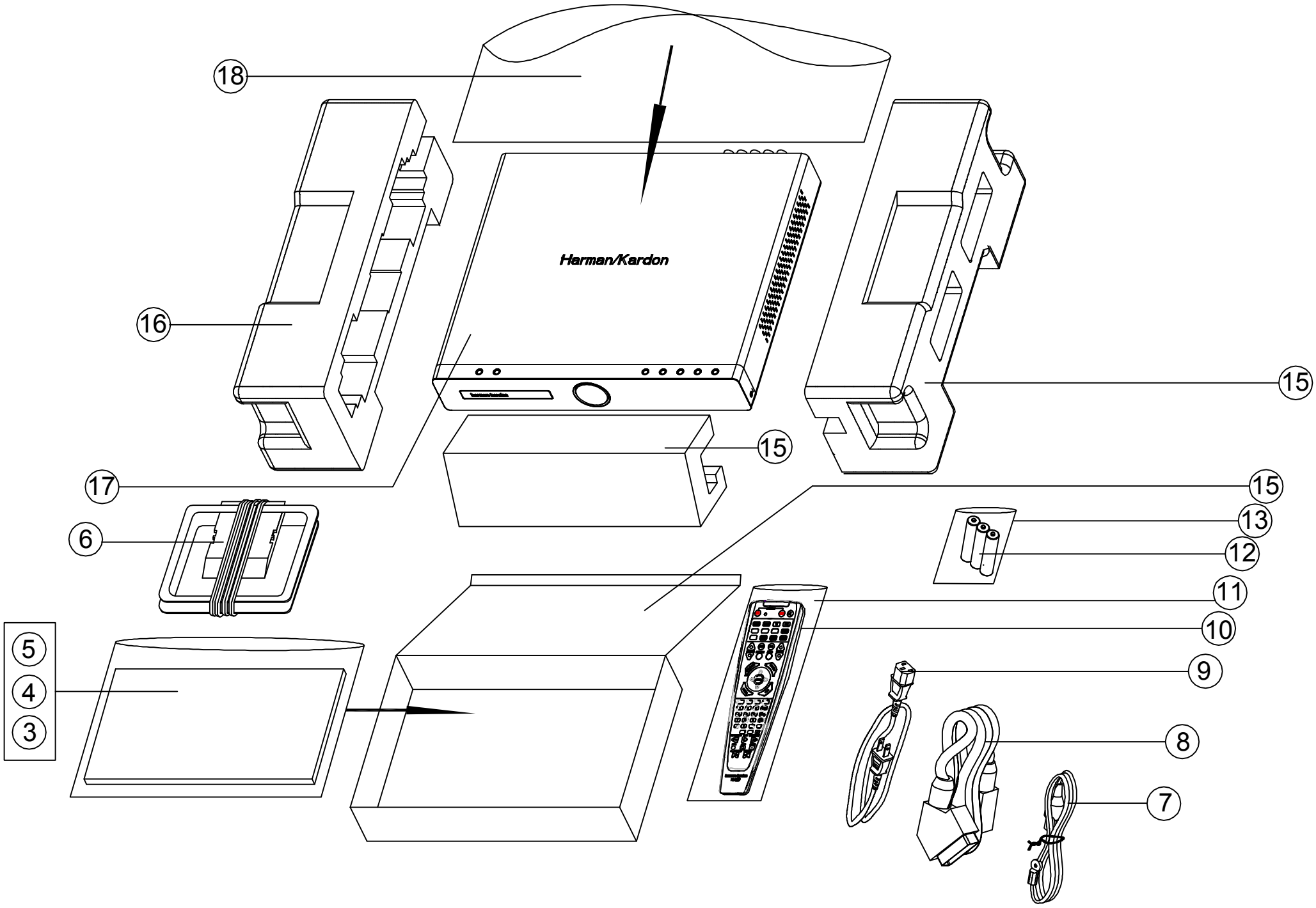

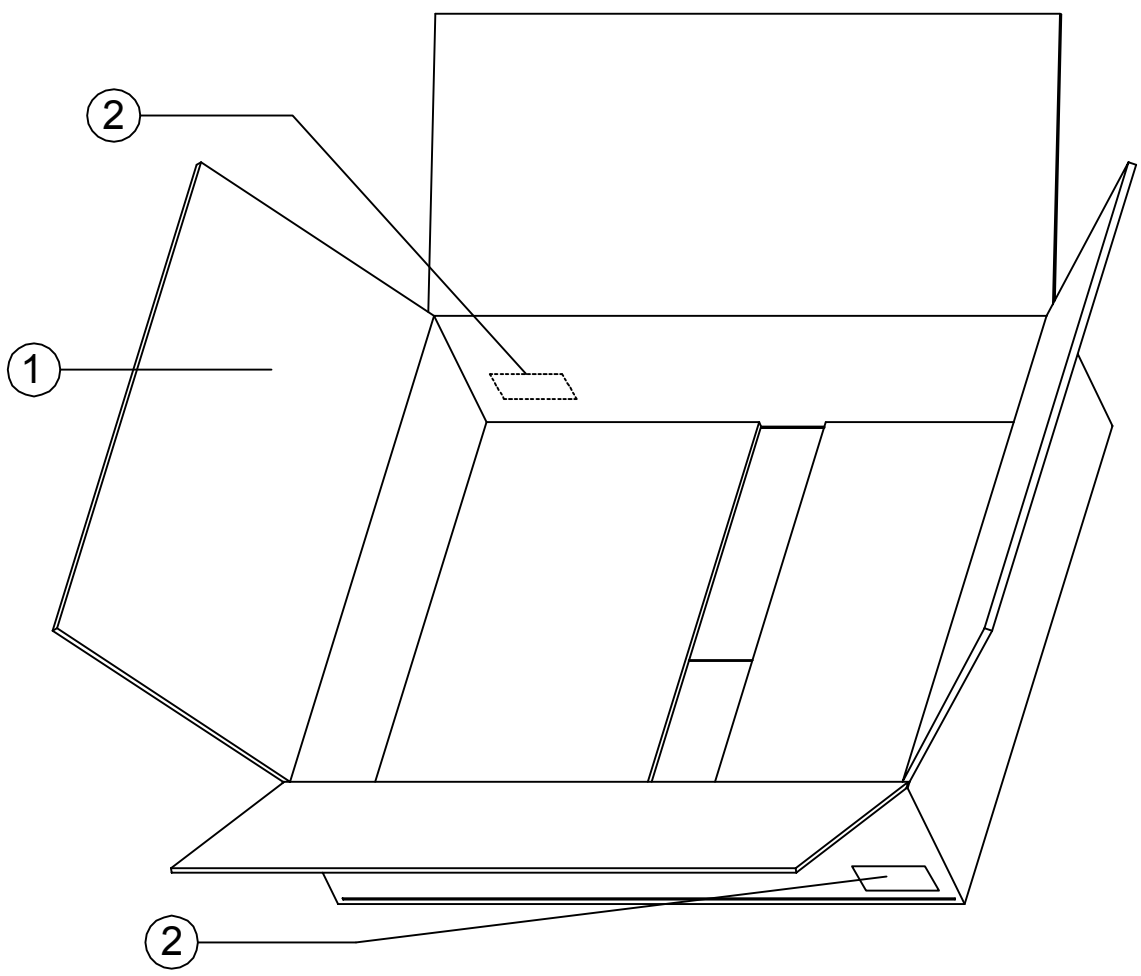

No.	Part No.	Description	Qty.
1	01.00.BZ.X.W.E232	Carton box HS100 EU version	1
	01.00.BZ.X.W.E231	Carton box HS100 US version	1
2		Barcord label	1
3	01.00.YS.SM1.E261	Owner manual HS100 US version	1
	01.00.YS.SM1.E262	Owner manual HS100 EU version	1
4		Plastic bag for manual 25*35cm	1
5	01.00.YS.FY3.345	Safety instruction manual HS100 EU	1
	01.00.YS.FY3.346	Warning card HS100 US version	1
	01.00.YS.FY3.347	Guarantee card HS100 US version	1
6	01.47.CNT.CTX.042	AM antenna AM-300-AWM	1
7	01.47.CNT.CTX.037	FM antenna FM-075	1
	01.47.CNT.CTX.038	FM antennab FM-TV-75-A	1
8	01.47.CNT.LJX.5.012	SCART cable	1
9	01.47.CNT.ACX.E052	AC power cord EU version	1
	01.47.CNT.ACX.E053	AC power cord US version	1
10	01.00.RC.100	Remote control HS100	1
11		Plastic bag for RC 9*27.5cm	1
12	01.14.DX.B.0007	battery 7# battery	3
13		Plastic bag for battery 6*9c	1
14		accessories box	1
15		accessories Polyfoam	2
	01.00.BZ.F.P.E100	Polyfoam HS100- left	1
	01.00.BZ.F.P.E101	Polyfoam HS100- right	1
16		Main unit	1
17		Plastic bag for unit 54.5*60cm	1

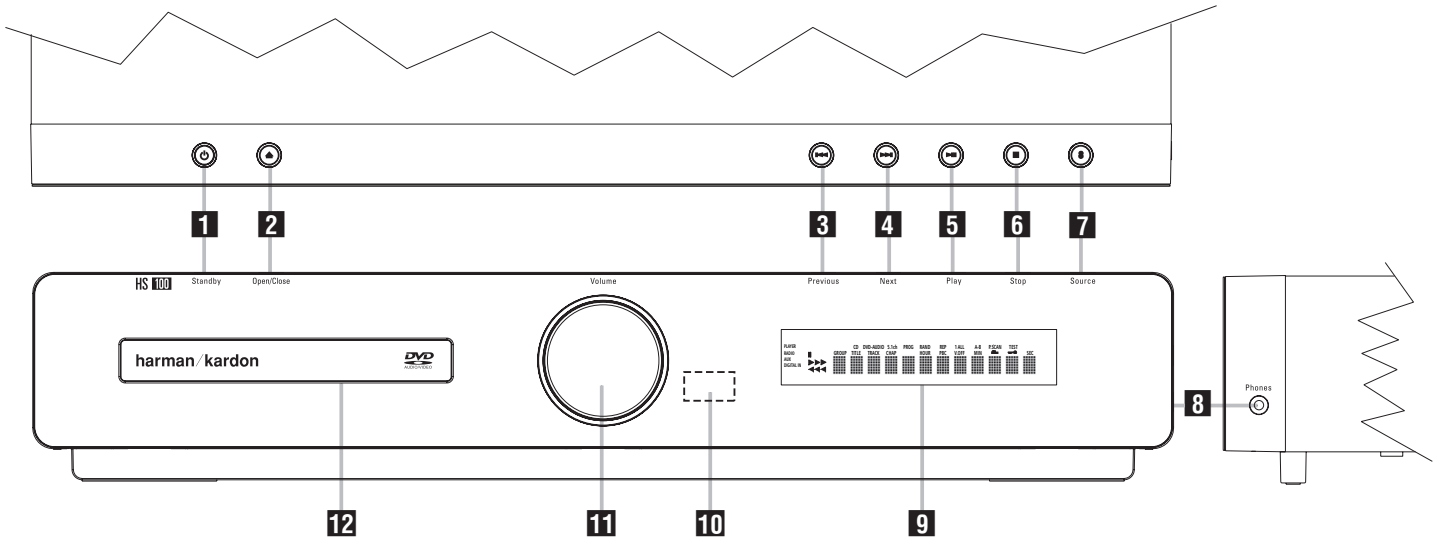

NOTE: To make it easier to follow the instructions that refer to this illustration, a larger copy may be downloaded from the Product Support section for this product at www.harmankardon.com.

1 Power On/Off (Standby)
2 Open/Close
3 Skip (Previous)
4 Skip (Next)
5 Play/Pause
6 Stop
7 Source
8 Headphone Jack
9 Information Display
10 Remote Sensor
11 Volume Control
12 Disc Drawer

1 Power On/Off (Standby): When the HS 100 is connected to AC power, the ring around this button will glow amber, indicating that the unit is in Standby and is ready to be turned on. Press this button (or the **Power On Button** **1** on the remote control) to turn the unit on. When the unit is on, the amber illumination around the button turns blue and the lighting surrounding the **Volume Control** **11** will turn blue.

2 Open/Close: Press this button to open or close the Disc Tray.

3 Skip (Previous): Press this button to move backward through the music tracks on a CD or the chapters on a DVD.

4 Skip (Next): Press to move forward through the music tracks on a CD or the chapters on a DVD.

5 Play/Pause: Press to initiate playback or to momentarily pause playback. To resume playback, press the button again. If a DVD is playing, action will freeze and a still picture will be displayed when the button is pressed.

6 Stop: Press this button once to place the disc in the Resume mode, which means that playback will stop; but as long as the tray is not opened, DVD playback will continue from the same point on the disc when the Play button is pressed again. Resume will also work if the unit was turned off. When this button is pressed twice, playback of the disc will restart at the beginning of the disc.

7 Source: Press this button repeatedly to scroll through the available audio and video sources.

8 Headphone Jack: This jack may be used to listen to the system's output through a pair of headphones with a standard 3.5mm stereo mini plug. Note that the main room speakers will automatically be turned off when the headphone jack is in use.

9 Information Display: This display delivers messages and status indications to help you operate the HS 100 controller.

10 Remote Sensor: The infrared sensor that receives commands from the remote control is behind the front-panel lens in this area. To ensure proper operation of the HS 100, it is important that this area is not blocked or covered.

11 Volume Control: Turn this knob clockwise to increase the volume, counterclockwise to decrease the volume. If the HS 100 is muted, adjusting the volume control will automatically release the unit from the silenced condition.

12 Disc Drawer: This drawer holds the discs played in the HS 100. Be certain to properly seat all discs carefully in the recess in the drawer tray. Do not press down on the drawer when it is open, as this will damage the player.

FRONT-PANEL DISPLAY

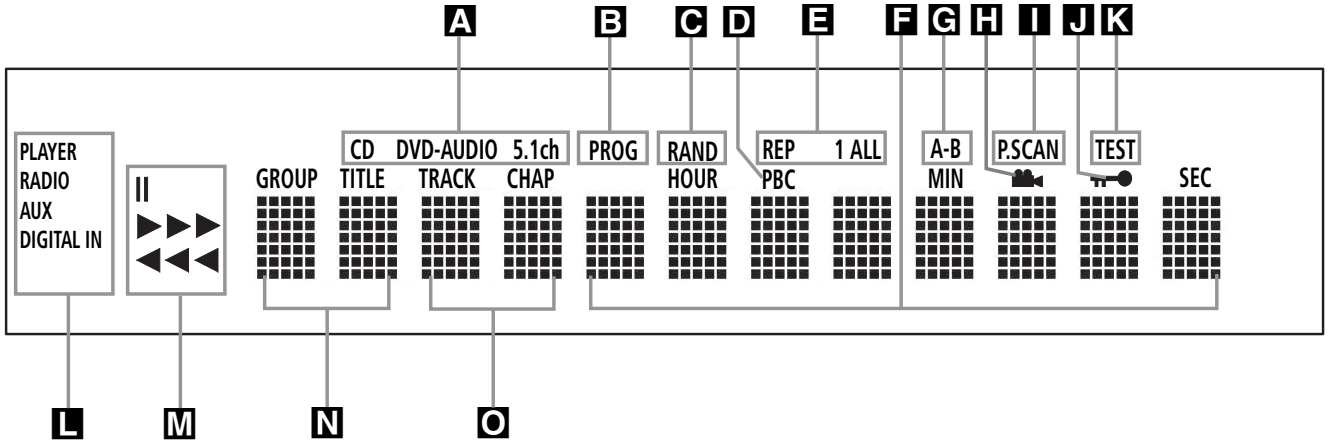

NOTE: To make it easier to follow the instructions that refer to this illustration, a larger copy may be downloaded from the Product Support section for this product at www.harmankardon.com.

A Disc Type Indicators
B Program Indicator
C Random Indicator
D VCD Playback Control Indicator
E Repeat Indicators
F Time Indicators
G A-B Repeat Indicator
H Angle Indicator
I Progressive Scan Indicator
J Parental Lock Indicator
K Test Indicator
L Source Indicators
M Playback-Mode Indicators
N Title Indicators
O Chapter/Track Number Indicators

A Disc Type Indicators: The CD, DVD or DVD-Audio indicator will light to show the type of disc currently being played.

B Program Indicator: This indicator lights when the programming functions are in use.

C Random Indicator: This indicator lights when the unit is in the Random Play mode.

D VCD Playback Control Indicator: This indicator lights when the playback control function is turned on with VCDs.

E Repeat Indicators: These indicators light when any of the Repeat functions are in use.

NOTE: In addition to functioning individually to display information about DVD, DVD-Audio or CD discs, the **N O F** indicators also are used together as a group to display information messages about the status of the HS 100, such as the selected input's name and surround mode, the station playing when the tuner is in use and specific function messages when a DVD, DVD-Audio or CD disc is playing (such as `Reading` when the disc is loading).

F Time Indicators: These positions in the indicator will show the running time of a DVD in play. When a CD is playing, these indicators will show the current track time, time remaining in the current track, or the total remaining time on the disc.

G A-B Repeat Indicator: This indicator lights when a specific passage for repeat playback has been selected.

H Angle Indicator: This indicator blinks when alternate viewing angles are available on the DVD currently playing.

I Progressive Scan Indicator: This indicator lights when the unit sends out a progressive scan signal.

J Parental Lock Indicator: This indicator lights when the parental lock system is engaged in order to prevent anyone from changing the rating level without a code.

K Test Indicator: This indicator lights when the TV test screen is activated.

L Source Indicators: These indicators will light to show which source is currently selected.

M Playback-Mode Indicators: These indicators light to show the current playback mode:

▶ Lights when a disc is playing in the normal mode.

▶▶▶ When the HS 100 is in the Fast Search play mode, two or three of these indicators will light to show that the unit is in a Fast Play mode, depending on the speed.

II Lights when the disc is paused.

◀◀◀ Lights when the disc is in the Fast Search Reverse mode. Two or three of these indicators will light to show that the unit is in a Fast Play mode, depending on the speed.

N Title Indicators: These two positions in the display will show the current title number when a DVD disc is playing.

O Chapter/Track Number Indicators: When a DVD disc is playing, these two positions in the display will show the current chapter. When a CD is playing, they will show the current track number.

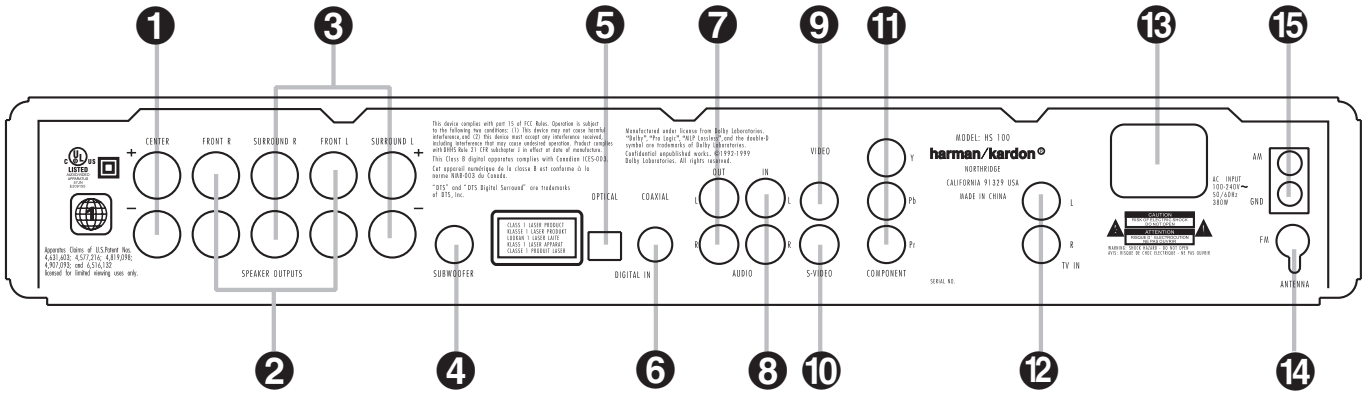

❶ Center Speaker Outputs
❷ Front Speaker Outputs
❸ Surround Speaker Outputs
❹ Subwoofer Output
❺ Optical Digital Input
❻ Coaxial Digital Input
❼ Analog Audio Outputs
❽ Analog Audio In
❾ Composite Video Output
❿ S-Video Output
⓫ Component Video Outputs
⓬ TV Audio In
⓭ AC Power Cord Jack
⓮ FM Antenna
⓯ AM Antenna

NOTE: To make it easier to follow the instructions that refer to this illustration, a larger copy may be downloaded from the Product Support section for this product at www.harmankardon.com.

❶ **Center Speaker Outputs:** Connect these outputs to the matching + and – terminals on your center channel speaker. The Green terminal is the positive (+) terminal that should be connected to the Red (+) terminal on the speakers. Connect the Black (–) terminal on the HS 100 to the Black negative (–) terminal on your speaker. (See page 12 for more information on speaker polarity.)

❷ **Front Speaker Outputs:** Connect these outputs to the matching + or – terminals on your left and right speakers. The White terminal is the positive (+) terminal that should be connected to the Red (+) terminal on Front Left speaker, while the Red terminal is the positive (+) terminal that should be connected to the Red (+) terminal on Front Right speaker. Connect the Black (–) terminals on the HS 100 to the Black (–) terminals on the speakers. See page 11 for more information on speaker polarity.

❸ **Surround Speaker Outputs:** Connect these outputs to the matching + and – terminals on your surround channel speakers. The Blue terminal is the positive (+) terminal that should be connected to the Red (+) terminal on the Surround Left speaker, while the Gray terminal should be connected to the Red (+) terminal on the Surround Right speaker. Connect the Black (–) terminal on the HS 100 to the matching Black negative (–) terminals for each surround speaker. (See page 11 for more information on speaker polarity.)

NOTE: You'll find more details about all Audio/Video connections under Setup and Connections on the following pages.

❹ **Subwoofer Output:** Connect to the SUB/LFE input on the subwoofer.

❺ **Optical Digital Input:** Connect the optical digital output from an HDTV receiver, LD player, MD player, satellite receiver or CD player to this jack. The signal may be a Dolby Digital signal, DTS signal or a standard PCM digital source.

❻ **Coaxial Digital Input:** Connect the coax digital output from an HDTV receiver, LD player, MD player, satellite receiver or CD player to this jack. The signal may be a Dolby Digital signal, DTS signal or a standard PCM digital source. Do not connect the RF digital output of an LD player to these jacks.

❼ **Analog Audio Outputs:** Connect these jacks to the Record/Input jacks of an audio recorder for recording.

❽ **Analog Audio In:** Connect to the output of a line-level analog audio source: TV, tape player, Minidisc, PC, etc.

❾ **Composite Video Output:** Connect this jack to the video input on a television or video projector.

❿ **S-Video Output:** Connect this jack to the S-video input on a television or video projector.

⓫ **Component Video Outputs:** These outputs carry the component video signals for connection to display monitors with component video inputs. For standard analog TVs or projectors with inputs marked Y/Pr/Pb or Y/Cr/Cb, connect these outputs to the corresponding inputs. If you have a high-definition television or projector that is compatible with high-scan-rate progressive video, connect these jacks to the "HD Component" inputs. Note that if you are using a progressive scan display device, then "Progressive" must be selected in the Video Setup menu in order to take advantage of the progressive scan circuitry. See page 14 for more information on progressive scan video.

IMPORTANT: These jacks should NOT be connected to standard composite video inputs.

⓬ **TV Audio In:** Connect the analog left/right outputs of a cable TV set-top, satellite receiver, or the analog left/right stereo outputs from a video display with integrated digital tuner to these jacks.

⓭ **AC Power Cord:** Connect the AC power cord to this jack when the installation is complete. To ensure safe operation, use only the power cord supplied with the unit. If a replacement is required, it must be of the same type and capacity.

⓮ **FM Antenna Jack:** Connect to the supplied FM antenna.

⓯ **AM Antenna:** Connect the AM loop antenna supplied with the receiver to these terminals with the white wire connected to the "AM" terminal and the black wire connected to the "GND" terminal. If an external AM antenna is used, make connections to the AM and GND terminals in accordance with the instructions supplied with the antenna.

REMOTE CONTROL

1. Power On
2. Transmit Indicator
3. Radio
4. Player
5. Repeat
6. Playlist
7. Display
8. Pic +/Pic –
9. Subtitle
10. Open/Close
11. Navigation Buttons
12. Status
13. Numeric Keys
14. Search/Slow Reverse
15. Title
16. Skip/Step (Previous)
17. Skip/Step (Next)
18. Pause
19. STOP
20. Search/Slow Forward
21. Play
22. Angle
23. Zoom
24. Clear
25. OSD
26. Enter
27. Disc Menu
28. Audio
29. Volume Control
30. A-B Repeat
31. Random
32. Digital In
33. AUX
34. TV
35. Mute
36. Power Off
37. IR Transmitter Window

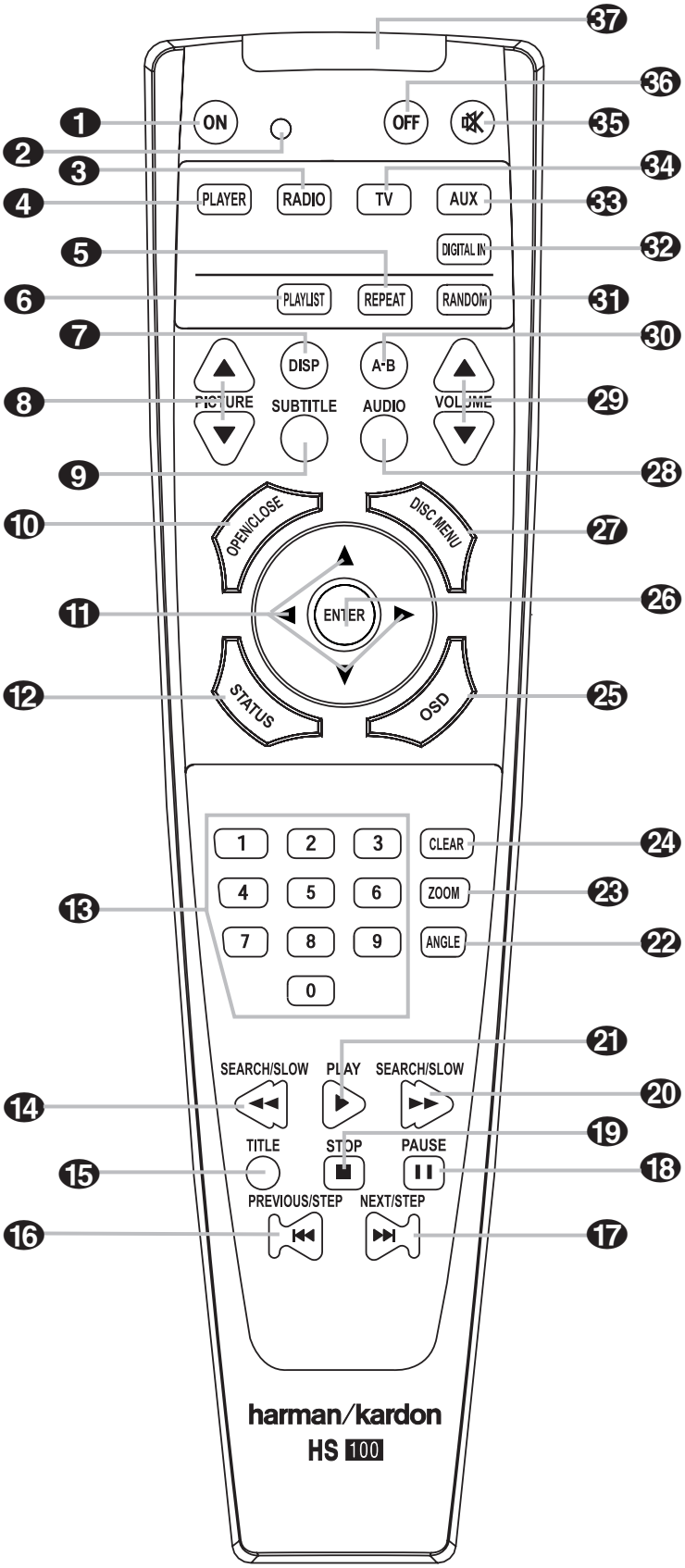

NOTE: To make it easier to follow the instructions that refer to this illustration, a larger copy may be downloaded from the Product Support section for this product at www.harmankardon.com.

❶ **Power On:** Press this button to turn the HS 100 on when it is in Standby mode.

❷ **Transmit Indicator:** This LED will light red when any button is pressed to confirm that the remote code is being transmitted.

❸ **Radio:** Press this button to select the internal tuner as the input source. When the tuner is in use, press this button to switch between the AM and FM frequency bands.

❹ **Player:** Press this button to select the internal CD/DVD drive as the input source.

❺ **Repeat:** Press this button to go to the Repeat menu. You can repeat a chapter, track or the entire disc.

❻ **Playlist:** Press this button to change the playback order of the disc.

❼ **Display:** Press this button to change the brightness of the front-panel display or to turn the display off completely in the following order: FULL BRIGHTNESS ➜ HALF BRIGHTNESS ➜ OFF ➜ FULL BRIGHTNESS.

❽ **Pic +/Pic –:** Press these buttons to move to the previous or next image when viewing JPEG images.

❾ **Subtitle:** When a DVD is playing, press this button to select a subtitle language or to turn subtitles off.

❿ **Open/Close:** Press this button to open or close the disc tray.

⓫ **Navigation Buttons (◀/▶/▲/▼):** Press these buttons to move the cursor in the OSD.

⓬ **Status:** Press this button while a disc is playing to view the banner display. Use the **Navigation Buttons ⓫** to move through the different features in the banner display. When a symbol is highlighted, press the **Enter Button ㉖** on the remote to select it.

⓭ **Numeric Keys:** Press this button to select numbers.

⓮ **Search/Slow (Rev.):** Allows you to search in reverse through a disc while it is in Play mode. Each time you press this button, the search speed changes as indicated by a number of arrows on the right top of your screen. After pressing the **Pause Button ⓲** and then pressing this button, each press will change the slow-play speed as indicated by the number of arrows on the right top of the screen.

⓯ **Title:** When a disc is playing, press this button to go back to the first section of the disc.

⓰ **Skip/Step (Previous):** Press this button to go to the beginning of the current track. Press it again quickly to go to the beginning of the previous track. After pressing the **Pause Button ⓲**, each press of this button will move the image in reverse, frame by frame.

⓱ **Skip/Step (Next):** Press this button to go to the beginning of the next track. After pressing the **Pause Button ⓲**, each press of this button will move the image forward, frame by frame.

⓲ **Pause:** Press this button to freeze a picture (with DVD/VCD) or pause playback (CD). Press it again for normal playback.

⓳ **Stop:** Press this button to stop a disc. When a disc is playing, if you press STOP and the **Play Button ㉑**, the disc will resume play; i.e., it will start from the same point on the disc where the unit was stopped. If you press STOP twice and the **Play Button ㉑**, the disc will start from the beginning.

⓴ **Search/Slow (Fwd.):** Press this button to search forward through a disc while it is in Play mode. Each time you press this button, the search speed changes, as indicated by a number of arrows on the right top of your screen. After pressing the **Pause Button ⓲** and then pressing this button, each press of this button will change the slow-play speed, as indicated by the number of arrows on the right top of the screen.

㉑ **Play:** Press this button to begin playback of a disc. If the disc drawer is open, pressing this button will also close the drawer automatically.

㉒ **Angle:** Press this button to access various camera angles on a DVD (if the DVD contains multiple camera angles) or to rotate JPEG images.

㉓ **Zoom:** When a DVD or VCD is playing, press this button to zoom the picture. There are four steps to the zoom function, each progressively larger. Press through each of the zoom stages to return to a normal picture.

㉔ **Clear:** Press this button to remove the Banner menu from the screen.

㉕ **OSD:** Press this button to access the On-Screen Display menu.

㉖ **Enter:** Press this button to activate a setting or option.

㉗ **Disc Menu:** Press this button to display the actual DVD Disc menu on the TV screen in Play mode. When playing discs with JPEG images, pressing this button will access the thumbnails.

㉘ **Audio:** Press this button to access various audio languages on a DVD (if the DVD contains multiple audio streams).

㉙ **Volume (+ or –):** Increase/decrease the master volume level.

㉚ **A-B:** Press this button to select section A-B and to play repeatedly.

㉛ **Random:** Press this button for Random playback in random order.

㉜ **Digital In:** Press this button to selects the audio device connected to either digital audio input as the input source.

㉝ **AUX:** Press this button to select the device connected to the **Audio In Jacks ❽** as the input source.

㉞ **TV:** Press this button to select the device connected to the TV In **Audio Jacks ⓬** as the input source.

㉟ **Mute:** Press this button to mute the sound. Press the button again, or press either of the **Volume Control Buttons ㉙**, to return to normal audio output.

㊱ **Power Off:** Press this button to place the HS 100 in the Standby mode.

㊲ **IR Transmitter Window:** Point this window toward the HS 100 when pressing buttons on the remote to make certain that the infrared commands are properly received.

Installation and Connections

After unpacking the HS 100 controller unit and the speakers, the first step is to place each speaker and the HS 100 controller unit in its location in your listening room. Consult the separate owner's manual packed with the speaker system for detailed information on physical mounting of the speakers.

When making any connections between speakers and the HS 100, as well as between the HS 100 and other audio/video components, it is important that both the HS 100 and external components be turned off, preferably with the power removed from the AC outlet. This protects against accidental turn-on that might cause damage not covered by the products' warranty.

When placing any speaker or the controller, make certain that it is on a solid surface capable of supporting its weight, and make certain that there is a means for connecting cables or speaker wires to reach through the back of any cabinets or shelves to the components they are connected to. As important, please note that due to the weight of the speaker cabinets, particularly the subwoofer, and the weight of and heat generated by the HS 100 controller, there is the remote possibility that the rubber padding on the bottom of the feet of the system components may leave marks on certain soft woods, wood veneers or carpets. Always use caution when placing any speaker or electronic component on a material that is soft or porous, or of a significantly different color than the feet or rubber padding on the component.

Speaker Placement

It is important that the speakers be placed in positions that enable them to do the best job of reproducing the sound as it was meant to be heard, regardless of the program content. Particularly in a multichannel 5.1 system, the placement of speakers can have a noticeable impact on the accuracy of the surround process.

When placing your speakers in a listening room, picture an imaginary circle starting at the center of your video screen that arcs around the room with the prime listening position, or "sweet spot" at the center of the circle. Depending on the number of speakers in your system, there is a recommended placement along the arc for each speaker, though the specific construction of your room (taking into account the available walls, bookcases, or floor space at which the speakers may be placed) will obviously have some impact on where the speakers are ultimately located. As a general rule, try to place all speakers so that they are positioned at the same height as your ears when you are seated at the prime listening position.

Use the following suggestions as a guide, and make the changes needed to fit the speakers to your room. Don't be afraid to experiment a bit until you find the right combination of locations that works for you. There is no real "right" or "wrong" place to put the speakers; work to optimize their locations so that audio moves across the front of the room smoothly, without seeming to jump from one speaker to another.

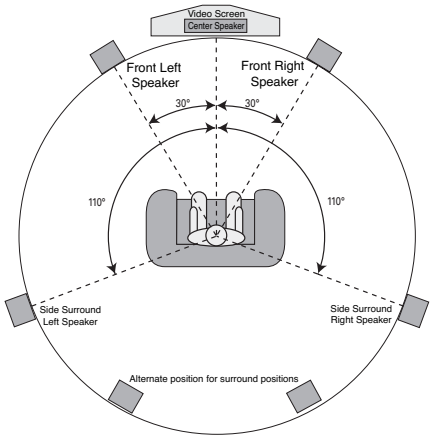

Center Channel Speaker

The ideal location for the center channel speaker is at "0 degrees" in our circle, directly in front of the prime listening position. Place the center channel speaker as close to the top (or bottom) of the video screen as possible so that when you position the front left/right speakers the tweeters of all three front channel speakers are within 24" of one another.

Front Left/Right Speakers

The recommended placement for front left/right speakers is to place them at the 30-degree position with reference to the center channel speaker. The distance between them should be about the same as the distance from the center channel speaker to the prime listening position.

Although the natural tendency is to place the speakers so they are parallel to the wall behind them, and thus in line with the video screen, the preferred placement is to angle the speakers slightly ("toe in") so that they point to the prime listening position.

Surround Speakers

In a 5.1 surround system, an additional pair of left/right speakers is added to the front left, right and center speakers. Although many believe that these speakers should be placed at the rear of the room, the preferred position for them is at the sides of the room, with rear placement a second option when room conditions prevent the use of side-mounted surround speakers.

When side-wall mounting is possible, place the left/right surround speakers at a point that is 110 degrees along our circle from the center of the video screen. This translates to placing them to the side and slightly behind your preferred listening position. If possible, angle the speakers in slightly so that they are pointing toward the listener's ears.

If it is not possible to place the surround speakers at the sides of the room, the alternate position is at the back of the room, about 150 degrees on our circle from the center of the video screen. Another way to spot the optimal, alternate rear-wall mounting position is to place the left surround speaker on the back wall so that it points directly at the front right speaker, and to have the right surround speaker point directly at the front left speaker. If possible aim the surround speakers so that they point "in" toward the listening area, rather than perpendicular to the walls.

NOTES ON SPEAKER PLACEMENT:

The limitations of your listening room, including the placement of walls and furniture, may make it difficult to follow the speaker placement suggestions shown above. Depending on the specific layout of the room, here are some ways to compensate for unusual conditions:

- Try to follow the suggested placement, but move the speakers within a few feet from the preferred locations.
- Regardless of where they are placed, always try to make certain that the main surround speakers are the same distance from the front speakers. (For example, try not to have the right surround speaker further back into the room than the left surround speaker.)
- If it is not possible to wall-mount or place speakers on a shelf, consider the use of optional floor stands.

Main Speaker Connections

Once you have placed your left, center, right and surround speakers in the listening room, use the speaker wire supplied with the HKTS 7 speaker system to connect the individual speakers to the rear panel of the HS 100. Follow the instructions in the HKTS 7 owner's manual concerning connection of the speaker wire to the back of each of the main speakers.

To simplify installation, the speaker wire included with the HKTS 7 has a color marking tab at each end of the wire to indicate the channel the wire's speaker is connected to. When connecting the wire to the speakers, we strongly recommend that you connect the wire in conformance with this color code, as it then makes it easier to match the color code for the speaker terminals on the HS 100.

The color coding is as shown below:

Speaker Position	Cable Color Code
Front Left	White
Center	Green
Front Right	Red
Surround Right	Gray
Surround Left	Blue

If you wish to shorten the length of the speaker wires, a set of colored stickers is included with the HKTS 7 owner's manual. For consistency, apply the tab to the

side of the cable pair that has a white stripe. The speaker wires are not only color-coded for channel identification; they are also color-coded for polarity. Since proper polarity is important for system performance, note that the side of each cable pair with the white stripe and color tab is the positive side, and the pure black side of the cable pair is the negative. When connecting the cables to the speakers, the red speaker terminal is positive (+), and should be connected to the side of the wire with the white stripe and color tab. The pure black side of the cable, where there is no color tab, is negative and should be connected to the black speaker terminal.

Once the wires are connected at the speaker end, connect each speaker to the rear panel of the HS 100. The color-coding on the speaker wire connectors makes it easy to make the connections properly. The positive (+) connection for the **Front Speaker Connections** ❷ are white for left and red for white, positive connection for the **Center Speaker Connection** ❶ is green, and the positive connections for the **Surround Speakers** ❸ are blue for left and gray for left. In each case, the corresponding black side of each speaker cable is the negative (–) connection and goes to the matching black terminal for the speaker.

Subwoofer Placement and Connection

Since subwoofers produce nondirectional sound, they may be placed almost anywhere in a room. Actual placement should be based on room size and shape and the type of subwoofer used. One method of finding the optimal location for a subwoofer is to begin by placing it in the front of the room, about six inches from a wall, or near the front corner of the room. Another method is to temporarily place the subwoofer at your normal listening position, and then walk around the room until you find a spot where the subwoofer sounds best. Place the subwoofer in that spot, or you may wish to experiment with the best location for a subwoofer in your listening room.

Using the audio interconnect packaged with the HKTS 7 system, connect one end to the **Subwoofer Output** ❹ on the rear panel of the HS 100 and connect the other end to the "SUB" input on the subwoofer.

Audio Equipment Connections

Since the HS 100 is a complete integrated home theater system with an onboard DVD Audio/Video player and tuner, you may not need to make any additional audio equipment connections. However, if you have any external audio components, they should be connected as follows:

Products with digital audio outputs, such as an external CD changer, set-top cable box, satellite receiver, video game console, compatible computer sound card or HDTV receiver may be connected to either the **Optical** ❺ or **Coaxial** ❻ Digital inputs.

Connections to the analog audio output of a cable set-top, satellite receiver, or the Left/Right analog output of a TV set with built-in digital television tuner should be connected to the **TV Audio Inputs** ⓬.

You may connect the outputs of any other analog audio device, such as a phono preamp, video game console, camcorder, audio recorder or similar to the **Analog Audio Inputs** ❽. If you are connecting an audio recorder to the HS 100, the record/in jacks on the recording device should be connected to the **Analog Audio Outputs** ❼ on the HS 100.

Video Equipment Connections

Depending on the type of TV set or video display to be used, connect the HS 100 to the display using one of the following methods:

- If you have a high-definition, or "digital", television, connect the **Component Video Outputs** ⓬ to a matching set of component inputs on the display.
- If your TV set has only S-video and standard, composite video inputs, we recommend that the **S-Video Output** ❿ be used as the connection.
- When a standard, composite video input is all that is available on the TV set for video input, connect the **Composite Video Output** ❾ to the TV.

System Connections

Connect the FM antenna supplied with the HS 100, or an optional, external FM antenna feed to the **FM Antenna Jack** ⓮. If the antenna uses 300-ohm twin-lead cable, you must use an optional 300-ohm to 75-ohm adaptor to make the connection. Assemble the supplied AM loop antenna so that the tabs at the bottom of the antenna loop snap into the holes in the base. Connect the white wire to the "AM" terminal and the black wire to the **GND Terminals** ⓯.

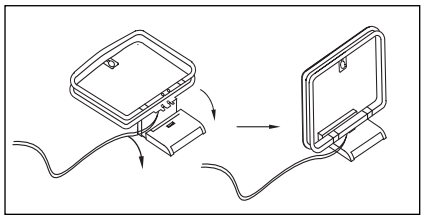

Connect the AC power cord to the **AC Power Cord Jack** ⓭, and then plug the cord into an unswitched AC outlet. Note that the ring surrounding the Power On/Off switch will turn amber to indicate that the HS 100 is connected to an AC power source and in the Standby mode.

System Preparation

Remove the protective plastic film from the HS 100's front-panel lens. If left in place, this film may affect the performance of the remote control.

Install the three supplied AAA batteries in the remote, as shown below.

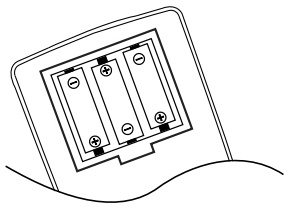

To remove the battery cover, place your thumb on the round inset area on the door and gently press upward until the door slides out. When inserting the batteries be certain to follow the (+) and (–) polarity indications that appear at the bottom of the battery compartment. Replace the battery compartment cover by pressing it down toward the bottom of the remote until it snaps into place.

Connecting the AC Power

You are now ready to power up the HS 100 controller before beginning the final adjustments.

1. Plug the AC power cord into the **AC Power Cord Jack** 13, and then into an unswitched AC outlet. Note that the **Power Indicator** 2 will turn orange, indicating that the unit is in the Standby mode.
2. Turn the HS 100 on either by pressing the **Power On/Off** 2 or the **Input Source Selector** 5 on the front panel, or via the remote by pressing the **Power On Button** ❶ on the remote. The **Power Indicator** 2 will turn blue to confirm that the unit is on, and the **Main Information Display** 1 will also light up.

Congratulations! You have now completed the physical installation and connection of your HS 100 system and only a few configuration steps are needed to tailor the way the HS 100 operates to meet your needs and the requirements of your listening room. Please continue with the steps on the following pages to make certain that your new system delivers all the performance it was designed to provide.

System Setup

The final step in the installation of the HS 100 is to establish the system's configuration. Before proceeding, make certain that the HS 100 is properly connected to a video display and an AC power source. Turn on the video display, and switch its input, if necessary, to the input connected to the HS 100's video output.

Turn on the HS 100 by pressing the **Power On/Off Switch** **1** on the front panel or the **Power On Button** ❶ on the remote. Note that the lighting surrounding the **Power On/Off Switch** **1** will turn blue, a blue light will surround the front-panel **Volume Control** **10**, the **Information Display** **9** will light and the HS 100 screen will appear on your video display.

In many cases you will not need to change the default settings. This is normal, as we have anticipated the typical system setup. Of course, you may return to the setup menus and change them at any time to reflect a change in your personal preferences or equipment selection.

System Defaults

General Functionality of the OSD Menu

The setup and control of the HS 100 takes place in an advanced user-guided On Screen Display (OSD) menu system. The OSD can be activated by pressing the **OSD Button** ㉕ on the remote control. Pressing this button again de-activates the OSD.

The main menu consists of a PLAYER menu, RADIO menu, TV menu, AUX menu, DIGITAL IN menu and a SET-UP menu. The PLAYER menu will show all information and options available for the disc currently playing. The RADIO menu will show radio and RDS options. The TV, AUX and DIGITAL IN menus show the surround options for these specific audio inputs. The SET-UP menu will help you configure all audio and video settings which are normally made only once.

Each main menu contains submenus. These submenus are shown as icons on the left side of the menu. They may be selected by moving the white highlighted square around the icon by pressing the **Navigation Buttons** ⓫. Menus may be activated by pressing the **Enter Button** ㉖ when an icon is highlighted. When the **Enter Button** ㉖ has been pressed, the color of the icon will change to dark blue and the current settings of this submenu will appear on the right side of the menu. Although each menu has various submenus and settings, they are all navigated in the same way. All submenus, settings and options can be accessed with the help of the **Navigation Button** ⓫ and the **Enter Button** ㉖ on the remote control.

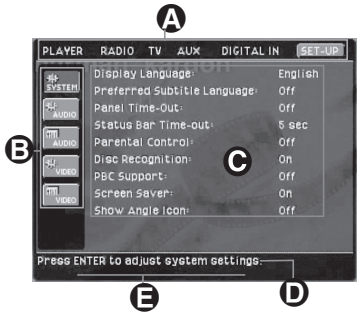

Ⓐ Main Menu Line
Ⓑ Submenus
Ⓒ Current Settings
Ⓓ Command Descriptions
Ⓔ Option Descriptions

To change a setting, simply move the highlight cursor to the setting you wish to change. This setting will be highlighted in light blue, and a brief explanation will appear in the Upper Menu Line on the bottom of your screen, together with the available options for this setting on the Lower Menu Line. Use the ◀/▶ **Navigation Buttons** ⓫ to highlight the requested option for this setting. Press the **Enter Button** ㉖ to activate the new setting.

Setup Menu

The first step in checking or changing the system defaults is to access the SET-UP Menu. First, make certain that the HS 100 Controller is properly connected to a video display, and that power is connected. For this process, however, you do not need to load a disc into the unit.

During Stop, Pause or Play mode, if you press the **OSD Button** ㉕ on the remote, the main menu appears on the screen.

In the SET-UP menu you will find submenus for making or changing all settings and adjustments for both the Audio and Video aspects of your HS 100.

To access the SET-UP Menu, press the **OSD Button** ㉕, and press the ◀/▶/▲/▼ **Navigation Buttons** ⓫ until SET-UP is highlighted. Press **Enter Button** ㉖ to activate the SYSTEM settings:

System Settings

The System Setting submenu contains the following sections. Follow the explanations in the Upper Menu Line at the bottom of the screen to change settings.

Display Language: This setting selects the language that will be used for the HS 100's OSD menus and other system messages. The default is English, but you may also select French, Spanish, German or Italian.

Preferred Subtitle Language: This setting selects the language used for the display of subtitles. The default setting is OFF, which plays discs without subtitles. To set the player so that subtitles will always play in a specific language when they are available, select from any of the choices shown on the **Option Descriptions** Ⓔ when adjusting this item, as shown above. If you do not find your preferred language in the list of options, you may select a preferred language by first pressing the ◀/▶ **Navigation Buttons** ⓫ during the setting adjustment so that OTHER is highlighted. Press the **Enter Button** ㉖ and then use the **Numeric Keys** ⓭ to enter the four-digit code listed on page 31 for the desired language. This selects a preferred subtitle language, but it will only be available when the disc being played contains that language. The list of subtitles available on any given disc is always shown on the disc jacket, usually at the bottom of the back cover. Note that the subtitles may also be switched on or off, or a new language selected during playback using the **Subtitle Button** ❾, as described on page 21.

Panel Time-Out: This settings selects the time-out interval for the front-panel **Information Display** **9**. The default setting is OFF, which disables this feature so that the front-panel indicators are always illuminated. You may also choose five to 20 seconds as the length of time after you press any button on the front panel or remote for the display to go out. To view the displays when they are off, press any button on the remote.

Status Bar Time-Out: This setting selects the time-out interval for the on-screen Status Bar that appears at the top of your video screen when the **Status Button** ⓬ is pressed while a disc is playing. During DVD playback, the status bar shows the current title and chapter, as well as the elapsed or remaining time in the current title. You may program the status bar to remain on screen for either five or 20 seconds after the **Status Button** ⓬ is pressed. When OFF is selected, the time-out is disabled, and the status bar will remain on the screen until the **Status Button** ⓬ or **Clear Button** ㉔ is pressed.

Parental Control: This setting enables you to restrict viewing to films or other discs encoded with parental control information to a specific level or below, and it also allows you to change the password that must be entered to change the settings for this option. The default setting allows all discs to be played, but you may change the setting so that viewing is controlled within eight steps, with lower numbers being more

restrictive and high numbers allowing more material to be viewed. The steps correspond to the standard MPAA ratings symbols as follows. Additional information about movie ratings is available online at www.mpaa.org/movieratings.

- Step 1 is equivalent to a "G" rating for general audiences with material appropriate for all viewers.
- Step 2 is an intermediate level between "G" and "PG" rated material.
- Step 3 is equivalent to a "PG" rating.
- Step 4 is equivalent to a "PG-13" rating.
- Step 5 is an intermediate level between "PG-13" and "R" rated material.
- Step 6 is equivalent to an "R" rating.
- Step 7 is equivalent to an "NC17" rating.
- Step 8 allows all discs to be played, regardless of their content rating.

To access the Parental Control settings, press the ▲/▼ Navigation Buttons (11) until the current setting on the **Parental Control Settings** line is highlighted and press the **Enter Button** (26). Next, enter the default password by pressing "8888" using the **Numeric Buttons** (13). Finally, use the ◀/▶ **Navigation Buttons** (11) to highlight the desired parental control level as shown on the **Options Descriptioins** (E) line as described above. You may also change the password by highlighting NEW PASSWORD, pressing **Enter Button** (26) and by following the instructions that appear in the **Command Descriptions** (D) line.

Disc Recognition: This setting controls the Disc Recognition feature. When turned on, it allows you to pause a DVD-Video disc, remove it from the player, play another disc, and then resume the playback of the original disc at a later time from the point at which you paused. When a previously played disc is reinserted in the HS 100, an on-screen status message will ask whether you wish to start playback from the beginning of the disc or resume at the point where you left off. Note that even when the setting is activated, you must *pause* the playback, rather than bring it to a full stop, and the unit must not be turned off between discs.

PBC Support: This setting controls the activation of PBC (Play Back Control) Support for VCD discs. If you plan to play VCD discs, which are a CD-ROM-based format that predates DVD, we recommend that the setting be turned ON.

Screen Saver: This setting controls the activation of a screen saver that prevents the image of the "splash screen" from being "burned" into the face of your video display when a disc is stopped for more than five minutes. If you use the HS 100 with a plasma display, direct-view CRT set or a CRT-based projector, we strongly recommend that the setting be turned ON.

Show Angle Icon: This setting controls the activation of the Angle Icon. When this setting is turned ON, the Angle Icon, which is a small image of a movie camera, will appear in the upper right corner of the screen when multiple-angle material is available on the disc being played. When the icon appears, press the **Angle Button** (22) on the remote to switch between the available views or program material.

Audio Setup Menu

This menu establishes the HS 100's configuration for general audio settings, such as preferred language and digital audio settings.

As with all setup menus, press the **OSD Button** (27) to activate the main menu screen, and then press the ◀/▶ **Navigation Buttons** (11) so that SETUP is highlighted. Press **Enter Button** (26), and then use the ◀/▶/▲/▼ **Navigation Buttons** (11) until the AUDIO SETUP menu is highlighted within a white outline and press the **Enter Button** (26) again. Finally, press the ◀/▶/▲/▼ **Navigation Buttons** (5) once more to move the highlight to the **Control Settings** (C) side of the menu screen.

The following adjustments are available on the AUDIO SETUP menu:

Preferred Audio Language: This setting is used to select the default language that will be used for program playback. The factory default setting is English, but you may choose French, Spanish, German or Italian by making a selection on the **Options Descriptions** (E) line. To select a language other than those shown, select OTHER from the choices on the **Options Descriptions** (E) line and press the **Enter Button** (26). Then, use the **Numeric Keys** (16) to enter the four-digit code listed on page 31 for the desired language. This selects a preferred audio program language, but it will only be available when the disc being played contains that language. The list of languages available on any given disc is always shown on the disc jacket, usually at the bottom of the back cover. Note that the audio playback language may also be changed at any time during playback using the **Audio Button** (23), as described on page 20, but any changes made will only be effective during playback of that disc.

Dynamic Range: This setting allows you to take advantage of the programming present on some Dolby Digital recordings to reduce the volume of louder, peak passages while maintaining intelligibility of quieter passages. This means that you may listen to programs at a level that allows the full impact of a soundtrack to be heard at a volume that is lower than you might otherwise use to avoid complaints about loud volume levels. The HS 100 accomplishes this by compressing the audio to a greater or lesser degree, depending on which setting you choose. Three options are available:

- MINIMUM does not make any changes to the original playback, and should be used when the volume setting in the listening room may be as loud as you desire.
- MEDIUM applies a moderate amount of compression so that louder passages are a little quieter.
- MAXIMUM applies more compression so that louder passages are much softer.

Feel free to experiment with the settings at any time. Note that if your receiver or processor also allows you to program the dynamic range setting, also known as the "Night Mode," you do not need to make any adjustments on the HS 100 and should leave the setting at MINIMUM.

Delay Unit: This setting selects the measurement system used in entering delay times when the AUDIO ADJUSTMENTS menu is activated. Distance entry in feet is the default, but you may alternatively choose to enter the distances in meters.

Tone Control: This setting determines whether the Tone Controls are activated. When OFF is selected, the audio output is run "flat" with no tone cut or boost. When ON is selected, the tone control settings made in the next two adjustments are applied.

Bass Level: When the Tone Control setting (above) is ON, the amount of bass (low frequency) boost or cut selected here is applied to the output signal. To change the setting, make certain that the number at the right side of the Bass Level Command Descriptions Line is press the **Enter Button** (26) and then use the **Navigation Buttons** (11) to change the setting.

Treble Level: When the Tone Control setting (above) is ON, the amount of treble (high frequency) boost or cut selected here is applied to the output signal. To change the setting, make certain that the number at the right side of the Treble Level Command Descriptions Line is press the **Enter Button** (26) and then use the ◀/▶ **Navigation Buttons** (11) to change the setting.

DVD Sound Mode: This setting selects the surround mode that will be used when a DVD is playing. (To set the surround mode option for another input, such as "TV," "Digital In," "AUX" or the unit's internal AM/FM tuner, go to the specific menu for that input.) The factory default is ORIGINAL, which will play back DVDs in the format output from the disc, such as Dolby Digital or

DTS. To select the mode that will be used when a disc with two-channel audio is playing, make certain that the mode name at the right side of the DVD Sound Mode Command Descriptions Line is highlighted and then press the **Enter Button** (26). Use the ◀/▶ **Navigation Buttons** (11) to change the setting.

Audio Adjustment

The Audio Adjustment Submenu contains the speaker delay and output level adjustment settings of the HS 100. Follow the explanations in the **Command Options** (D) on the bottom of your screen to make adjustments.

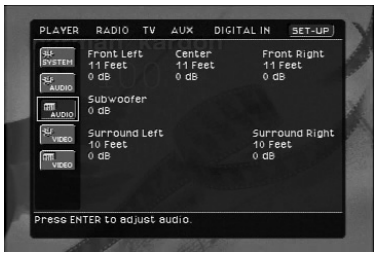

Delay

Due to the different distances between the listening position for the front and surround channel speakers, the amount of time it takes for sound to reach your ears from each set of speakers is different. You may compensate for this difference through the use of the delay settings to adjust the timing for specific speaker placement in your particular home theater or listening room. Before proceeding, measure the distance between each speaker and the preferred listening location.

Next, press the ◀/▶/▲/▼ **Navigation Buttons** (11) so that the second of the two AUDIO icons in the **Sub-Menus** column (B) is surrounded by a white outline, with the icon box turning dark, rather than light, blue. This is the Audio Settings Menu. Next, press the ◀/▶/▲/▼ **Navigation Buttons** (11) until the distance setting under the Front Left speaker title is highlighted and press the **Enter Button** (26). To change the setting, press the ◀/▶ **Navigation Buttons** (11) so that the number highlighted in the **Options Description** line (E) at the bottom of the screen is the distance from the speaker to the listening position. Press the **Enter Button** (26) when you are done.

Press the ◀/▶/▲/▼ **Navigation Buttons** (11) to move across the menu screen to each of the distance settings under each of the rest of the speaker positions, and repeat the procedure to enter the distance setting. Note that distance setting for the subwoofer does not need to be entered, as delay is not a factor with low-frequency information.

Output Level Adjustment

Output level adjustment is a key part of the configuration process for any surround sound system.

NOTE: Listeners are often confused about the operation of the surround channels. While some assume that sound should always be coming from each speaker, most of the time there will be little or no sound in the surround channels. This is because they are only used when a movie director or sound mixer specifically places sound there to create ambience, a special effect or to continue action from the front of the room to the rear. When the output levels are properly set, it is normal for surround speakers to operate only occasionally. Artificially increasing the volume to the rear speakers may destroy the illusion of an enveloping sound field, which duplicates the way you hear sound in a movie theater or concert hall.

For ideal surround playback, the output level from each channel should be equal, and in most cases the factory default setting of 0dB should accomplish that. However, in some cases the specifics of your listening room may require some adjustments. To adjust the output levels, first put in a disc with test tones or content you are familiar with, and that has a reasonably even level without a great deal of changes. Then, press the ◀/▶/▲/▼ **Navigation Buttons** (11) until the output level setting with the factory default of "+0dB" at the bottom of the list under the Front Left speaker distance setting is highlighted. If an increase or decrease needs to be made to the level, press the **Enter Button** (26) and then use the ◀/▶ **Navigation Buttons** (11) so that the desired level is highlighted in the **Options Description** line (E) at the bottom of the menu screen. Press the **Enter Button** (26), and then press the ◀/▶/▲/▼ **Navigation Buttons** (11) to move across the menu screen to each of the output level settings under each of the rest of the speaker positions, and repeat the procedure to enter the output level offset, if needed, that brings all of the channels to the same output volume. You may need to repeat this procedure more than once to accurately set the levels.

Video Setting

This menu establishes the DVD's configuration for video format settings such as aspect ratio and output scan.

As with all setup menus, press the **OSD Button** (25) to activate the main menu screen, and then press the ◀/▶ **Navigation Buttons** (11) so that SETUP is highlighted. Press the **Enter Button** (26), and then use the ◀/▶/▲/▼ **Navigation Buttons** (11) until the VIDEO SETUP menu is highlighted within a white outline, and press the **Enter Button** (26) again. Finally, press the ◀/▶ **Navigation Buttons** (5) once more to move the highlight to the **Control Settings** (C) side of the menu screen.

The following adjustments are available on the Video Setup menu:

Aspect Ratio: This setting selects the aspect ratio of video programming. Your choice should be made according to the shape of your video display and your personal preferences. Three choices are available:

- **16:9:** If you have a widescreen (16:9) display, or a display that has a widescreen mode, choose this setting. With this setting, the HS 100 will adjust the output for widescreen movies so that they fill the entire screen in the proper aspect ratio. Note, however, that in this setting a disc recorded in the 4:3 aspect ratio will appear in the widescreen as a boxed image in the center, with black columns on the left and right side of the screen. Note that if the widescreen option is chosen and a widescreen movie is played on a conventional 4:3 aspect ratio set, the image will be distorted due to vertical compression.
- **4:3 Letterbox:** If you have a standard, 4:3 aspect ratio video display, choose this setting if you wish to see the entire frame of the movie as it is recorded on the disc without any image cutoff at the left and right sides. While this allows widescreen movies to be shown in their entirety, they will occupy a smaller portion of the screen and black "letterbox" bars may appear at the top and bottom of the screen.
- **4:3 PanScan:** If you have a standard, 4:3 aspect ratio video display and prefer to have widescreen movies displayed without the black bars at the top and bottom of the screen, choose this option. Note, however, that since most DVDs do not contain special "pan/scan" coding that allows the on-screen image to follow the action, you may find that while the image will fill the screen, the vertical spread will cause it to be cropped at the left and right side.

Scan Type: This setting allows you to select between progressive and interlaced scanning for the **Component Video Outputs** (11) to maximize the image resolution for the type of video display in use. When all desired setup and configuration entries have been made, press the **OSD Button** (25) to return the player to normal operation and you are ready to enjoy the finest in DVD or CD playback. Note that the output at the **S-Video** (10) and **Composite Video** (9) outputs will always be standard-rate video that is compatible with any television set or video display. Two choices are available:

- **Progressive:** Select this option if you have a video display that is compatible with input sources of 480p or greater. Displays labeled as "HDTV Ready," including virtually all large-screen LCD and plasma displays, are compatible with progressive scan.
- **Interlaced:** Select this option when you are using an older video display that has Y/Pr/Pb component inputs, but which is not capable of displaying high scan rate, or "HD," signals.

Video Mode: This setting affects only the **Component Video Outputs** ⓫, and it controls how the video signals are optimized for progressive scan display. In most cases, the "automatic" mode is your best choice, as it senses whether the disc being played was originally recorded on video or shot on film. However, in some cases you may wish to compensate for errors in the disc authoring that occur when the frame rate is not properly maintained when films are converted to video. Three choices are available:

- **Auto:** This is the recommended setting, as it lets the HS 100 analyze the signals from the DVD and adjust the output accordingly.
- **Movie:** Choose this option for optimal playback of material that was shot on film, even though you are viewing it on video via a DVD.
- **Video:** Choose this option for optimal playback of material that was shot directly to video, such as concerts and sports programming.

Video Adjustments Menu

This menu allows you to adjust five key parameters of the video signal to compensate for differences between HS 100 and other video sources. You may use either the HS 100's built-in color bar test signal or a test disc as the standard for the adjustments. To ensure that your system is properly optimized, we strongly recommend that you adjust your video display using the display's own controls before making any changes to the HS 100's output. Once the display is properly calibrated with all settings on the HS 100 set to their midpoint, use the controls on this menu to fine-tune the HS 100's output.

Due to the nature of these settings, the navigation is somewhat different from the HS 100's other menus and controls. The menu itself is called up in the same way as the other menus. Press the **OSD Button** ㉕ to activate the main menu screen, and then press the **▲/▼ Navigation Buttons** ⓫ so that SETUP is highlighted. Press the **Enter Button** ㉖, and then use the **◀/▶/▲/▼ Navigation Buttons** ⓫ until the VIDEO ADJUSTMENTS menu box (which contains an icon with slider controls and the word VIDEO, and is located at the bottom of the column in the **Submenus Area** Ⓑ) is highlighted within a white outline. Then press **Enter** ㉖ again.

When you press **Enter** ㉖ the video adjustments will appear inside a black bar at the top of the screen, with either the video from a disc being played or the splash screen shown on the rest of the screen.

To change any of the video adjustments shown at the top of the screen, first press the **◀/▶/▲/▼ Navigation Buttons** ⓫ so that the "+" to the right of a parameter name is highlighted to increase the setting or "–" to the right of a parameter name is highlighted to decrease the setting. Then press the **Enter Button** ㉖ to change the value as shown by the number of blue lines to the left or right of the center line. When only the dark center line is shown with no blue lines, the setting is at the midpoint default value.

When adjusting the Black Level setting, note that the adjustment available is to either have the setting at the midpoint, which provides a full "0 to 100" black level setting, or "full," which complies with standards for video with what is called "setup," or a "7.5 to 100" black level setting.

Changes to any of the settings may be made with a test disc playing, or you may use the internal test signal by pressing the **◀/▶/▲/▼ Navigation Buttons** ⓫ until the word OFF is highlighted next to the TEST SCREEN line. To activate the test signal, press the **Enter Button** ㉖ and note that a special combination test signal, including both color bars and gray scale along with 100% black and white fields, will be displayed. To recall the video controls, press the **OSD Button** ㉕ and then navigate among the settings and make any necessary changes following the steps in the previous paragraph.

Test Screen

With the test screen showing on your video display, the following adjustments may be made:

- The proper color intensity setting on your TV.
- Proper color adjustments using the color bars, which should be (left to right) black, white, yellow, cyan (turquoise), green, magenta, red, blue, black.

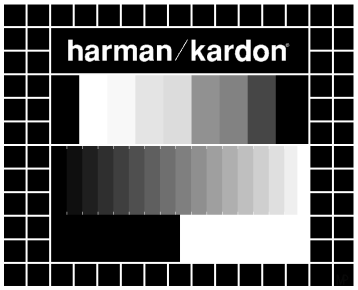

- The proper color transition, seen as sharp separation of the bars.
- The performance of the color circuits in your TV (with "Video" signals); bar edges should show no vertical crawling dots.

With the gray scale and the black/white fields below the color bars, the brightness and contrast of your screen can be adjusted.

TV Picture Adjustment With Test Screen

Brightness Adjustment:

1. Turn down the color control on your TV until the color bars are visible in black and white.
2. Adjust the contrast to the lowest level where you still can see all bars within the gray scale in the test picture separately and clearly.
3. Adjust the brightness so that the bars in the gray scale are all visible. The bar furthest to the left has to be as black as possible rather than gray but the next gradation must clearly be distinct from it. All the bars in the gray scale should be gradually and evenly changing from black to white, left to right.

Contrast Adjustment:

1. Adjust the contrast on your TV until you see a bright white bar in the lower right corner of the screen and a deep-dark-black bar to the left. The optimal contrast setting will depend on your preference and the surrounding light in the TV room.
2. If the brightness of the white bar no longer increases when the contrast is turned up or the borders of the white "harman/kardon" letters on top bloom (overlight) into the black areas (drastically decreasing the sharpness of the type), the contrast has been turned up too much. Reduce the contrast until these effects disappear and the video still looks realistic.
3. If you are watching TV with customary surrounding daylight, adjust the contrast so that a normal video picture has about the same look as the surroundings in your room. That way the eye is relaxed when watching the TV picture. This contrast setting may be reduced when the surrounding light is dimmed, thereby usually improving the sharpness of a video significantly.
4. The gray scale in the middle line needs to have the same clear difference between each bar as

before the contrast adjustment. If not, go back to "Brightness Adjustment" and repeat Step 3 and then "Contrast Adjustment," making only minor adjustments each time for optimization.

Color and Tint Adjustment

1. When the brightness and contrast are set optimally, adjust the color control to the level of your preference. Set the level where the colors look strong but still natural, not overdone. If the color level is too high, depending on the TV, some of the bars will seem wider or the color intensity will not increase while the control is turned up. Then the color control must be reduced again. Ultimately, you also should test the color intensity with a video – e.g., pictures of natural faces, flowers, fruit and vegetables, and other common natural articles for an optimal setting of the color intensity.
2. Use the large white bar below the gray scale to tweak the warmth of the picture. Every viewer has a preference as to how the glow of the picture should be. Some prefer a little colder picture, some a warmer glow. The Tint function and the white bar can be used to control this. Adjust the Tint to the level where you feel the white color has the tone you prefer.

Basic Operation

Once all connections have been made and the proper configuration settings entered, you are ready to enjoy the incredible listening and viewing experience made possible by the HS 100. The pages that follow have all the information needed to operate the HS 100, but the following will help get you started with a basic overview.

- To turn on the HS 100, press the **ON Button** ❶ on the remote or the **Power On/Off Button** 1 on the front panel to use the input that was in use when the HS 100 was turned off.
- The HS 100 may also be turned on with direct access of a specific input by pressing the **Player** ❹, **Radio** ❸, **TV** ㉞, **Aux** ㉝ or **Digital In** ㉜ buttons on the remote.
- To select another input, press the **Player** ❹, **Radio** ❸, **TV** ㉞, **Aux** ㉝ or **Digital In** ㉜ buttons on the remote to choose the source.
- Turn the **Volume Control** 11 or press the **Volume Control Buttons** ㉙ on the remote to raise or lower the volume.
- To temporarily silence the output, press the **Mute Button** ㉟. Press the **Mute Button** ㉟ again or use the **Volume Control** 11 ㉙ to return to normal operation.
- Control over the settings for an individual input, such as DVD playback and navigation or using the tuner is done through a combination of the on-screen menus and the remote control and front panel buttons.
  - To access the menu for a specific input, press the **OSD Button** ㉕, and then press the ◀/▶ **Navigation Buttons** ⓫ until the desired source (or the Setup menu for global system adjustments) is highlighted in a light blue box. Note that the current source will be shown with a white line below its name while you select another source. Press the **Enter Button** ㉖ to select the highlighted source.
  - Consult the pages in this manual pertaining to each input source for the specific instructions about using or configuring that source.

Surround Modes

One of the most important features of the HS 100 is its ability to reproduce a multichannel surround presentation from digital sources, analog matrix-encoded sources or traditional two-channel stereo program material. In some cases, such as when a Dolby Digital or DTS source with a 5.1 soundtrack is playing, surround mode selection is automatic, regardless of which mode may be set in an input's menu. In other cases, the surround mode may be preset within the individual input's menu page. Each time the source is changed, the HS 100 will automatically change to the Surround Mode selected for that source.

When a DVD is playing, there may be a number of different surround mode or audio options such as a full 5.1 soundtrack in one language, a 2.0 soundtrack in different languages, or special commentary or descriptive tracks for the vision-impaired. You may select these tracks, when available, during DVD playback by pressing the **Audio Button** ㉘ and then using the ◀/▶ **Navigation Buttons** ⓫ to choose from the options shown in the on-screen menu.

TROUBLESHOOTING

If you experience any of the following difficulties while using the system, use this troubleshooting guide to help you remedy the problem. Should any problem persist, consult your authorized Harman Kardon dealer.

No power.

- Is the power cord firmly plugged into the power outlet?
- The system's processor may require a reset. In this event, unplug the player from the power outlet briefly and then plug it in again.

No picture.

- Check that the system is connected correctly and securely.
- The video cable may be damaged. Replace it with a new one.
- Make sure the system is connected to a video input on the TV (see page 12).
- Make sure the TV is turned on.
- Make sure the correct video input on the TV is selected for viewing with this system.

There is no sound, or volume is very low.

- Check that the speakers and components are connected correctly and securely.
- Make sure that you have selected the correct source on the system.
- Press **MUTE** on the remote control, if the words "MUTE ON" are blinking on the front-panel display.
- The protective circuitry has been activated because of a short circuit. Turn off the system, eliminate the short circuit problem and turn on the power again.
- An audio interconnect cable is damaged. Replace it with a new one.
- The system is in pause mode or in slow-motion play mode, or fast forward or fast reverse. Press ▶ to return to normal play mode.
- Check the speaker settings (see page 16).

The audio channels are reversed.

- Check that the speakers and components are connected correctly and securely.

Severe hum or noise is heard.

- Check that the speakers and components are connected securely.
- Check that the connecting cords are away from a transformer or motor or fluorescent light.
- The audio plugs are dirty. Wipe them with a cloth slightly moistened with alcohol.
- Clean the disc.

The surround effect is difficult to hear when you are playing a Dolby Digital soundtrack.

- Check to see whether the Dolby Digital mode is turned on properly; otherwise, unload and load the disc again.
- Check the speaker connections.
- Depending on the DVD disc, the output signal may at times be mono or stereo even if the soundtrack is recorded in Dolby Digital format.

The sound comes from the center speaker only.

- Depending on the disc, sound may sometimes come from the center speaker only. This also applies to mono recordings (from disc or any analog source), when Pro Logic mode is selected. This is normal.

No sound is heard from the center speaker.

- Adjust center speaker volume (see pages 16).

No sound or only very low volume from the rear speakers.

- Adjust the rear speaker volume (see page 16).

Radio stations cannot be tuned in.

- Check that the antenna is connected correctly. Adjust the antenna and connect an external antenna if necessary.
- No stations have been preset.
- The tuner mode is not selected, select the Radio mode.

The remote does not function.

- Remove any obstacles between the remote control and the system.
- Move the remote control closer to the system.
- Point the remote control at the remote sensor on the front panel.
- Replace all the batteries in the remote control with new ones if they are weak.
- Check that the batteries are loaded correctly.

The disc does not play.

- There is no disc inside. ("NO DISC" appears on the front-panel display and the TV screen.) Insert a disc.
- Insert the disc correctly with the playback side facing down on the disc tray.
- Clean the disc.
- The system cannot play certain disc types (see page 3).
- DVD with wrong region code (see page 11).

Playback stops automatically.

- Some discs include an auto pause signal. When playing such a disc, the system stops playback at the signal.

Track Skip or Direct Select with numeric buttons, Search, Slow-Motion Play, Repeat Play or Program Play, etc., cannot be done.

- Depending on the DVD, some of the above operations may not be available (playback control with DVD).

The audio language cannot be changed when you play a DVD.

- Multilingual sound is not recorded on the DVD.
- Changing the language for the sound is prohibited on the DVD.

The subtitle language cannot be changed when you play a DVD.

- Multilingual subtitles are not recorded on the DVD.
- Changing the language for the subtitles is prohibited on the DVD.

The subtitles cannot be turned off when you play a DVD.

- Depending on the DVD, you may not be able to turn the subtitles off.

The angles cannot be changed when you play a DVD.

- Multi-angles are not recorded on most DVDs.
- Change the angles when the angle mark appears on the TV screen.
- Changing the angles is prohibited on some DVDs.

Please also refer to the Troubleshooting guide contained in the HKTS 7 owner's manual if you suspect a problem with the speakers.

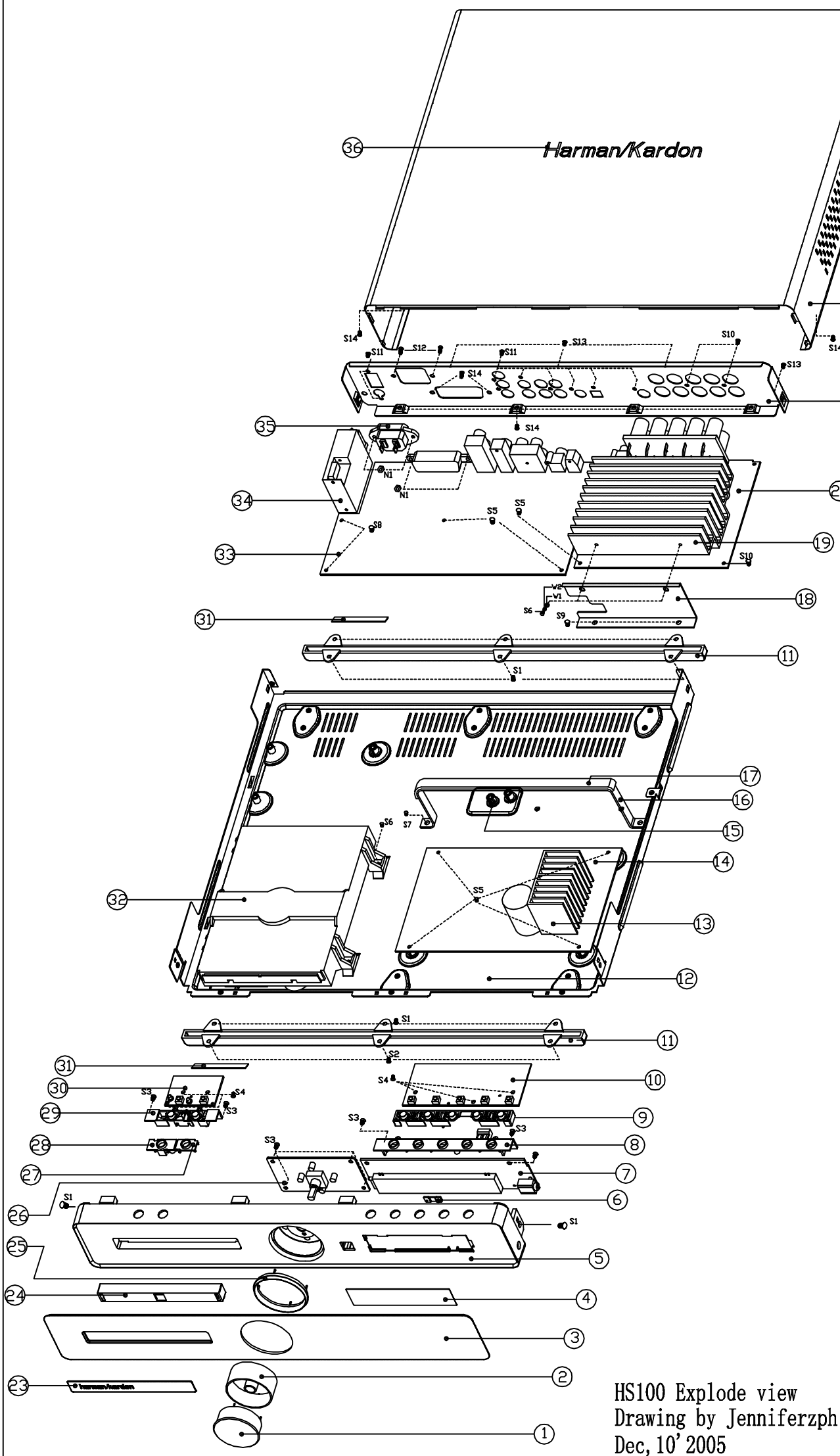

HS100 Explode view
Drawing by Jenniferzph
Dec, 10' 2005

No.	P/N	Description	Qty.
1	01.00.SJ.HS100.010	HS100—volume button	1
2	01.00.SJ.HS100.008	HS100—volume button lampshade	1
3	01.00.SJ.HS100.013	HS100—len for VFD	1
	01.00.SB.037	Metal logo HS100	1
4	01.00.SJ.QT.001	VFD filter 105.7mm*24.3mm*0.5	1
5	01.00.SJ.HS100.001	HS100—front panel	1
6	01.00.SJ.HS100.014	HS100—little press picec	1
7	02.03.70.1813C	HS100 (1813C VFD board)	1
8	01.00.SJ.HS100.004	HS100—5 in 1 button cover	1
9	01.00.SJ.HS100.009	HS100—disc tray door	1
10	02.03.70.1815C	HS100 (1815C button board)	1
11	01.00.SJ.HS100.011	HS100—pedestal underlay	2
12	01.00.WJ.TJ.415	HS100-chassis	1
13	01.00.WJ.TJ.421	heatsink 50*19*35mm	1
14	02.03.70.1356C	HS100 (power supplier board 1356C)	1
15	01.00.SJ.QT.005	PCB plastic frame Φ7*8mm	8
16	01.00.WJ.TJ.544	HS100-top cover support	1
17	01.00.DP.HM.E257	Sponge 200*12*2mm (1 side glue)	1
18	01.00.WJ.TJ.419	HS100-heatsink support	1
19	01.00.WJ.TJ.420	heatsink 135*95*45mm	1
20	02.03.70.1241C1	HS100 (amplifier board 1241C-1)	1
21	01.00.WJ.TJ.417	HS100-rear panel (EU)	1
	01.00.WJ.TJ.418	HS100-rear panel (US)	1
22	01.00.WJ.TJ.416	HS100-top cover	1
23	01.00.SJ.HS100.012	HS100—len for tray door	1
	01.00.SB.035	47mm Metal logo "Harman/kardon"	1
24	01.00.SJ.HS100.009	HS100—disc tray door	1
25	01.00.SJ.HS100.006	HS100—volume button cover	1
26	02.03.70.1814C	HS100 (1814C volume board)	1
27	01.00.SJ.HS100.005	HS100—2 in 1 button cover	1
28	01.00.SJ.HS100.007	HS100—power indicator slide	1
29	01.00.SJ.HS100.003	HS100—2 in 1 button	1
30	02.03.70.1816C	HS100 (1816C standby board)	1
31	01.00.DP.XJ.E192	silica gel underlay 50.6*4.2*1.5mm	4
32	01.15.JX.DV342	loader DV342 loader	1
33	02.03.70.1239C	HS100 (mainboard 1239C-PV1)	1
34	01.49.06	Tuner module TFCF1E803A (EU)	1
	01.49.07	Tuner module TFCF1E804A (US)	1
35	01.40.CON.DCZ.178	AC power socket WS-044-0	1
36	01.00.SB.036	Metal logo 100mm"Harman/kardon"	1
S1	01.00.WJ.JG.085	3*6KBTTNI	11
S2	01.00.WJ.JG.416	3*8KBTTNI	3
S3	01.00.WJ.JG.089	3*6PWAHC	4
S4	01.00.WJ.JG.089	3*6PAHC	14
S5	01.00.WJ.JG.089	3*6PWAHC	4
S6	01.00.WJ.JG.265	3*8PWBTTC	6
S7	01.00.WJ.JG.543	3*6PWBTTNI	2
S8	01.00.WJ.JG.451	3*6PWMHC	2
S9	01.00.WJ.JG.093	3*6PWMTTC	2
S10	01.00.WJ.JG.560	3*10PAHO	2
S11	01.00.WJ.JG.321	3*8PAHO	9
S12	01.00.WJ.JG.502	3*10PMHO	4
S13	01.00.WJ.JG.543	3*6PWBTTNI	5
S14	01.00.WJ.JG.252	3*4RBTTNI	6
W1	01.00.WJ.JG.426	Washer M3*0.5 W=8	2
W2	01.00.WJ.JG.424	Spring washer M3	2
N1	01.00.WJ.JG.119	M3 NUT	4

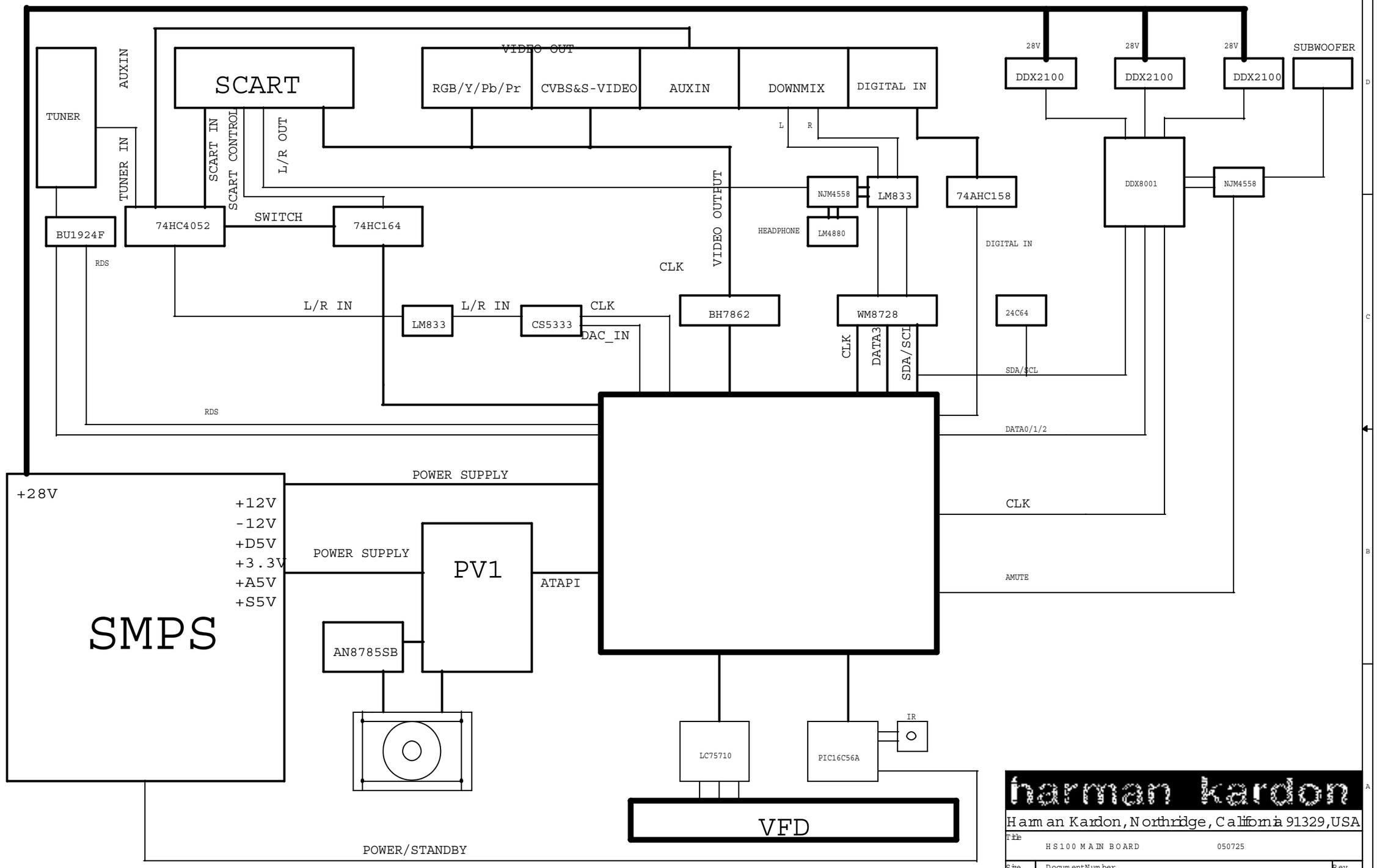

harman kardon

Harman Kardon, Northridge, California 91329, USA

Title	HS100 MAIN BOARD 050725	
Size B	Document Number SYSTEM	Rev 3.43
Date: Tuesday, November 22, 2005	Sheet 1 of 24	

HS100 Electrical Parts List (120v)				
MainBoard (1239C-PV1)				
Part Number	**Description**		**Qty**	**Reference Designator**
01.57.R.2.E000J	Resistor, chip	0603-0Ω ±5%	8	R1 R116 FB24 FB25 DR1 DR2 DR3 R143
01.57.R.2.E100J	Resistor, chip	0603-10Ω±5%	9	R61 R62 R63 R114 3R2 3R4 DR4 DR5 DR6
01.57.R.2.E220J	Resistor, chip	0603-22Ω±5%	6	R29 (R30) (R31) (R32) (R33) R202
01.57.R.2.E270J	Resistor, chip	0603-27Ω±5%	2	R145 R146
01.57.R.2.E330J	Resistor, chip	0603-33Ω±5%	5	R184 R185 R186 R189 R190
01.57.R.2.E560J	Resistor, chip	0603-56Ω±5%	2	R149 R150
01.57.R.2.E750F	Resistor, chip	0603-75Ω±1%	16	R9 R37 R39 R40 (R41) (R42) R43 (R44) R45 R46 R47 R48 AR3 AR4 AR5 AR6
01.57.R.2.E820J	Resistor, chip	0603-82Ω±5%	3	R182 R183 R187
01.57.R.2.E910J	Resistor, chip	0603-91Ω±5%	1	AR10
01.57.R.2.E101J	Resistor, chip	0603-100Ω±5%	5	R117 R137 R199 RR11 RR12
01.57.R.2.E151J	Resistor, chip	0603-150Ω±5%	2	R89 R98
01.57.R.2.E1870F	Resistor, chip	0603-187Ω±1%	2	R11 (R12)
01.57.R.2.E221J	Resistor, chip	0603-220Ω±5%	4	RR6 RR7 RR8 RR9
01.57.R.2.E331J	Resistor, chip	0603-330Ω±5%	2	R56 R67
01.57.R.2.E471J	Resistor, chip	0603-470Ω±5%	4	R193 R211 (R212) R213
01.57.R.2.E681J	Resistor, chip	0603-680Ω±5%	4	R55 R66 (3R3) (3R9)
01.57.R.2.E102J	Resistor, chip	0603-1KΩ±5%	9	R78 R191 R192 R194 RR3 R173A1 R173B1 R173C1 R173D1
01.57.R.2.E122J	Resistor, chip	0603-1.2KΩ±5%	1	R204
01.57.R.2.E1781F	Resistor, chip	0603-1.78KΩ±1%	2	R57 R68
01.57.R.2.E222J	Resistor, chip	0603-2.2KΩ±5%	1	R139
01.57.R.2.E272J	Resistor, chip	0603-2.7KΩ±5%	5	(R17) (R18) (R19) (R20) AR11
01.57.R.2.E302J	Resistor, chip	0603-3KΩ±5%	2	R81 R120
01.57.R.2.E392J	Resistor, chip	0603-3.9KΩ±5%	1	(R195)
01.57.R.2.E472J	Resistor, chip	0603-4.7KΩ±5%	23	R4 R7 R15 (R53) (R65) R93 R99 R106 R107 R108 R109 R110 R111 R113 AR2 AR12 (R4B1) (R5A1) (R121) (R122) (R123) AR7 R144
01.57.R.2.E4752F	Resistor, chip	0603-4.75KΩ 1%	2	R54 R64
01.57.R.2.E562J	Resistor, chip	0603-5.6KΩ±5%	2	R133 R197
01.57.R.2.E622J	Resistor, chip	0603-6.2KΩ±5%	1	R128
01.57.R.2.E682J	Resistor, chip	0603-6.8KΩ±5%	2	R86 R97
01.57.R.2.E752J	Resistor, chip	0603-7.5KΩ±5%	6	R58 R69 R126 R196 R131 R134
01.57.R.2.E822J	Resistor, chip	0603-8.2KΩ±5%	2	R90 R96
01.57.R.2.E103J	Resistor, chip	0603-10KΩ±5%	52	(R2) (R3) (R5) (R6) (RR1) (RR2) (RR10) (R16) (R21) (R22) (R23) (R24) (R27) (R34) R35 (R36) R38 R59 (R60) (R71) R72 (R79) R80 R84 (R85) R112 (R118) (R125) R132 R151 R152 R153 R154 R155 R158 R159 R167 R172 R175 (R176) (R177) (R178) R180 R188 (R205) (R206) (R207) (R208) R209 (R215) R156 R157
01.57.R.2.E103F	Resistor, chip	0603-10KΩ±1%	2	R130 R135
01.57.R.2.E153J	Resistor, chip	0603-15KΩ±5%	3	R26 (R119) (R210)
01.57.R.2.E183J	Resistor, chip	0603-18KΩ±5%	3	R124 R141 R201
01.57.R.2.E203J	Resistor, chip	0603-20KΩ±5%	4	3R1 3R5 3R6 3R10
01.57.R.2.E273J	Resistor, chip	0603-27KΩ±5%	1	R203
01.57.R.2.E333J	Resistor, chip	0603-33KΩ±5%	1	R127
01.57.R.2.E473J	Resistor, chip	0603-47KΩ±5%	1	R115
01.57.R.2.E683J	Resistor, chip	0603-68KΩ±5%	1	R181
01.57.R.2.E104J	Resistor, chip	0603-100KΩ±5%	5	(R28) R95 R102 (R129) 3R7
01.57.R.2.E105J	Resistor, chip	0603-1MΩ±5%	4	(R14) (R138) R198 3R8
01.57.R.3.E2R2J	Resistor, chip	0805-2.2Ω±5%	2	R147 R148
01.57.R.8.EP3304	Resistor, thick film chip network	33Ω*4 ±5%	4	RN13 RN16 RN17 RN18
01.57.R.8.EP0824	Resistor, thick film chip network	82Ω*4 ±5%	1	RN12
01.57.R.8.EP4734	Resistor, thick film chip network	47KΩ*4 ±5%	1	RN2
01.57.R.C.ED750	Fixed carbon film	RT1/4W-75Ω	1	R75
01.57.R.Y.270	Zinc oxide varistor, for ESD	AVR-M1608C270MTABB	2	ESD10 ESD11
01.54.CS.2.E6P8X	Capacitor,multilayer ceramic, chip	0603-6.8P X7R	1	C24
01.54.CS.2.E100N	Capacitor,multilayer ceramic, chip	0603-10P NPO±5%/50V	4	(C21) C124 C125 (C151)
01.54.CS.2.E200N	Capacitor,multilayer ceramic, chip	0603-20P NPO±5%/50V	6	(2C4) (2C8) (C31) (C35) (C37) (C43)
01.54.CS.2.E220N	Capacitor,multilayer ceramic, chip	0603-22P NPO±5%/50V	3	(C22) (C23) (C47)
01.54.CS.2.E330N	Capacitor,multilayer ceramic, chip	0603-33P NPO±5%/50V	3	(C91) (C95) C119
01.54.CS.2.E470N	Capacitor,multilayer ceramic, chip	0603-47P NPO±5%/50V	8	(C20) C81 C83 C108 C115 C60 C61 C87

Part Number	Description		Qty	Reference Designator
MainBoard (1239C-PV1)				
01.54.CS.2.E510N	Capacitor,multilayer ceramic, chip	0603-51P NPO±5%/50V	2	(C38) (C42)
01.54.CS.2.E201N	Capacitor,multilayer ceramic, chip	0603-200P NPO±5%/50V	2	C59 C74
01.54.CS.2.E221N	Capacitor,multilayer ceramic, chip	0603-220P NPO±5%/50V	1	C109
01.54.CS.2.E271N	Capacitor,multilayer ceramic, chip	0603-270P NPO±5%/50V	1	C90
01.54.CS.2.E561N	Capacitor,multilayer ceramic, chip	0603-560P NPO±5%/50V	3	(C26) (C72) C94
01.54.CS.2.E102X	Capacitor,multilayer ceramic, chip	0603-102 X7R±10%/50V	1	(C139)
01.54.CS.2.E152X	Capacitor,multilayer ceramic, chip	0603-152 X7R±10%/50V	1	C110
01.54.CS.2.E562X	Capacitor,multilayer ceramic, chip	0603-562 X7R±10%/50V	1	C116
01.54.CS.2.E103Y	Capacitor,multilayer ceramic, chip	0603-103 Y5V-20+80%/50V	5	C82 C84 (C114) (C158) (C161)
01.54.CS.2.E183X	Capacitor,multilayer ceramic, chip	0603-183 X7R±10%/50V	3	(C122) (C28) (C36)
01.54.CS.2.E333X	Capacitor,multilayer ceramic, chip	0603-333 X7R±10%/50V	1	(C112)
01.54.CS.2.E104Y	Capacitor,multilayer ceramic, chip	0603-104 Y5V-20+80%/50V	122	CB1 CB2 CB3 CB4 CB5 CB6 CB7 CB8 CB9 CB10 CB11 CB12 CB13 CB14 CB15 CB16 CB17 CB18 CB19 CB20 CB21 CB22 CB23 CB24 CB25 CB26 CB27 CB28 CB29 CB30 CB31 CB32 CB33 CB34 CB35 CB36 CB37 CB38 CB39 CB40 CB41 CB42 CB43 CB44 CB45 CB46 CB47 CB48 CB49 CB50 CB51 CB52 CB53 CB54 CB55 CB56 CB57 CB58 CB59 CB60 CB61 CB62 CB63 CB64 CB65 CB66 CB67 CB68 CB69 CB70 CB71 CB72 CB73 CB74 CB75 CB76 CB77 CB78 CB79 CB80 CB81 CB82 CB83 CB84 CB85 CB86 CB87 CB88 CB89 CB90 CB91 CB92 CB93 CB94 CB95 CB96 CB97 CB98 CB99 CB102 CB103 CB104 CB105 CB106 CB107 CB108 CB110 CB111 CB112 CB113 CB114 CB115 CB116 CB117 CB135 CB120 CB121 CB122 CB131 CB132 CB134 C85
01.54.CS.2.E105Y	Capacitor,multilayer ceramic, chip	0603-105 Y5V-20+80%/10V	3	(C150) (C156) (C157)
01.54.CS.3.E101N	Capacitor,multilayer ceramic, chip	0805-100P NPO±5%/50V	2	C54 C64
01.54.CS.3.E681N	Capacitor,multilayer ceramic, chip	0805-680P NPO±5%/50V	2	(C67) (C68)
01.54.CS.3.E102N	Capacitor,multilayer ceramic, chip	0805-102 NPO±5%/50V	2	C56 C69
01.34.CL.D.E1U50VC	Capacitor, AL.electrolytic	CD110-1UF/50V 5*11	9	C41 C44 EC22 EC23 EC24 EC25 3C1 3C2 3C3
01.34.CL.D.EV2U250VC	Capacitor, AL.electrolytic	CD110-2.2UF/50V 5*11	1	C93
01.34.CL.D.E4U750VC	Capacitor, AL.electrolytic	CD110-4.7UF/50V 5*11	2	EC43 EC44
01.34.CL.D.E10U16VC	Capacitor, AL.electrolytic	CD110-10UF/16V 5*11	12	EC15 EC16 EC20 EC21 EC28 EC29 EC33 EC34 EC35 EC36 EC39 C12
01.34.CL.D.E22U16VC	Capacitor, AL.electrolytic	CD110-22UF/16V 5*11	3	C27 C40 C46
01.34.CL.D.E47U16VC	Capacitor, AL.electrolytic	CD110-47UF/16V 5*11	24	C6 C14 C15 C29 C30 C49 C51 C58 C66 C75 C79 C80 C99 C100 C101 EC9 EC10 EC12 EC13 EC14 EC19 EC27 EC42 EC45
01.34.CL.D.E100U10VD	Capacitor, AL.electrolytic	CD110-100UF/10V 5*12	7	C11 C25 C39 C45 EC1 EC2 EC32
01.34.CL.D.E100U25VD	Capacitor, AL.electrolytic	CD110-100UF/25V 6.3*12	4	C17 C76 EC30 EC31
01.34.CL.D.E100U50VD	Capacitor, AL.electrolytic	CD110-100UF/50V 8*12	2	C4 C7
01.34.CL.D.E220U16VD	Capacitor, AL.electrolytic	CD110-220UF/16V 6.3*12	18	EC3 EC4 EC5 EC6 EC7 EC8 EC11 EC40 EC41 C1 C3 C8 C16 C19 C34 C77 3C6 3C7
01.34.CL.D.E330U16VD	Capacitor, AL.electrolytic	CD110-330UF/16V 6.3*12	2	C52 C53
01.34.CL.D.E470U16VD	Capacitor, AL.electrolytic	CD110-470UF/16V 8*12	3	C5 C13 C18
01.34.CL.D.EV1500U6V	Capacitor, AL.electrolytic	CD110-1500UF/6.3V 8*17	1	C48
01.13.L.L.S.E002	Inductor, multilayer ceramic, chip	0603-10UH	1	R136
01.13.L.L.S.E117	Inductor, multilayer ceramic, chip	0805-0.39UH	1	(L18)
01.13.L.L.S.E118	Inductor, multilayer ceramic, chip	0805-0.68UH	2	(L16) (L17)
01.13.L.R.068	Tuner 19k filter	EJ219	2	Z1 Z2
01.13.L.Z.ESA300	Bead, chip	0603-300Ω	1	R74
01.13.L.Z.ESA50	Bead, chip	0603-50Ω	11	FB10 FB11 FB12 (FB13) (FB14) (FB15) FB26 FB31 FB32 FB33 (FB34)
01.13.L.Z.ESB50	Bead, chip	0805-50Ω	37	FB1 FB2 FB4 FB6 FB7 FB8 FB27 FB28 FB29 L1 L2 L3 L4 L5 L6 L7 (L8) L9 L10 L11 L12 L13 L14 L15 L19 L20 L21 L22 (L23) L24 L25 L26 L28 L29 L30 L31 L33
01.13.L.Z.ED50A	Bead, leaded fixed	50Ω（3.5*6.0*0.8）	4	FB3 FB5 FB9 FB30
01.13.L.Z.EHFSF	Bead, without pin	HFSFBB3.5*6*0.8	2	match with Y1
01.41.D.PD.IN4148	Diode	IN4148 DIP	5	D15 D17 D18 D19 D20
01.41.D.PD.5393	Diode	IN5393 DIP	3	D24 D26 D27
01.41.D.PS.LL4148	Diode	LL4148 SMD	2	D16 D25
01.42.Q.S.9014	Transistor	C9014 SMD	7	Q3 Q4 Q5 Q6 Q7 Q8 Q13
01.42.Q.S.8050	Transistor	KTC8050 SMD	6	Q23 Q24 Q25 2Q4 2Q5 Q20

Part Number	Description		Qty	Reference Designator
MainBoard (1239C-PV1)				
01.42.Q.S.8550	Transistor	S8550 SMD	5	Q1 Q2 Q12 Q17 Q26
01.42.Q.S.EDTC343	Transistor	DTC343TKT146 SMD	4	Q9 Q10 (Q19) (Q27)
01.42.Q.S.DTA114	Transistor	DTA114EKAT146 SMD	1	Q22
01.42.Q.S.E3018	Transistor	2SK3018T106 SMD	1	Q18
01.42.Q.D.8050	Transistor	8050 DIP	1	Q16
01.42.Q.D.8550	Transistor	8550 DIP	1	Q15
01.00.JZ.E27000	Fundamental. Oscillator	27.000MHZ-49S-20P	1	Y1
01.00.JZ.E33868	Fundamental. Oscillator	33.8688MHZ-49S-20P	1	Y2
01.00.JZ.E4332	Fundamental. Oscillator	4.332MHz-49S-20P	1	Y3
01.44.IC.S.8785	IC, Panasonic, Motor Driver	AN8785SB, HSOP042	1	U1
01.44.IC.S.018EZ01	IC, Sharp, Voltage Regulator	O18EZ01, PQ025	1	U2
01.44.IC.D.79L05	IC, NS, Voltage Regulator	79L05, 3P, TO-92	1	U3
01.44.IC.S.3390	IC, Amlogic, decoder	AML3390DTS, 208P, PQFP	1	U4
01.44.IC.S.74HC164	IC, TI, 8-bit serial-in/ parallel-out shift register	74HC164, 14P, SO14	1	U5
01.44.IC.S.29LV160DB	IC, AMD, Flash	AM29LV160DB-90EC, 48P, TSO	1	U7（burn-in firmware）
01.46.IC.27C02	IC, Atmel Servo FLASH.	AT27C020-70ZC, PLCC	1	U8（burn-in servo code)
01.44.IC.S.103S47	IC, Panasonic, Servo chip	MN103S47JRB, 176P, QFP	1	U9
01.46.IC.641620	IC, Hyundai, SDRAM	HY57V641620HGT-7, 54P, TSOP54	1	(U6)
01.44.IC.S.4558	IC, JRC, Pre-amp	NJM4558, 8P, SOP	1	U12
01.44.IC.S.833	IC, NS, Pre-amp	LM833, 8P, SOP	2	U11 U20
01.44.IC.S.7862	IC, Rohm, Video Buffer	BH7862FS, 32P, SSOP-A32	1	U14
01.44.IC.S.4880	IC, NS, Audio Power Amplifier	LM4880, 8P, SOP8	1	3U2
01.44.IC.S.24C64	IC, Atmel, EEPROM	AT24C64, 8P, SOP	1	U15（burn-in EU or US firmware）
01.44.IC.S.8728	IC, Wolfson, Audio DAC	WM8728, 20P, SSOP20	1	U16
01.44.IC.D.78L05	IC, NS, Voltage Regulator	78L05, 3P, TO-92	3	U10 U13 U19
01.44.IC.S.4052	IC, NS, Analog Multiplexer	CD4052, 16P, SOP16	1	U21
01.44.IC.S.74HC158	IC, TI, Data selectors	74HC158, 16P, SOP16	1	U22
01.44.IC.S.5333	IC, Crystal, A/D Converter	CS5333, 16P, TSSOP16	1	U23
01.44.IC.D.L7809	IC, NS, Voltage Regulator	L7809, 3P, TO-220	1	U24
01.44.IC.S.1924	IC, Rohm, RDS decoder	BU1924, 16P, SOP16	1	U25
01.46.IC.7414	IC, Philips, Hex inverting Schmitt trigger	74HCT14, 14P, SO14	1	U26
01.40.CON.S05.E007	Connector	FPC-0.5-24P (upward touching)	1	CN3
01.43.004	Jack, Sharp, Fiber optic input jack	GP1FA513RZ, In-line Package	1	CN2
01.40.CON.DCZ.062	Connector	1.25-11P	1	CN1
01.40.CON.DPH.023	Connector	PH-5A, 5P, In-line Package	2	CN4 CN6
01.40.CON.DPH.027	Connector	PH-6A, 6P, In-line Package	1	CN5
01.40.CON.DPH.041	Connector	PH-9A, 5P, In-line Package	1	CON6
01.40.CON.DPH.001	Connector	PH-10A, 6P, In-line Package	1	CON7
01.40.CON.DCZ.142	Jack, YuanChang, Video&S-Video output jack	SAV-01 (yellow)	1	CON8
01.40.CON.DCZ.183	Jack, YuanChang, Component Vide	AV3-8.4-13G	1	CON4
01.40.CON.DCZ.173	Jack, YuanChang, Audio output&inp	AV4-8.4-5	1	CON9
01.40.CON.DCZ.123	Jack, YuanChang, Coaxial output ja	AV1-8.4-6G (orange)	1	CON5
01.40.CON.S10.E024	Connector	1.0-16P	1	CON1
HS100 Component List for MainBoard (1239C-PV1) only for US version				
01.57.R.2.E472J	Resistor, chip	0603-4.7KΩ±5%	4	R92 R101 R104 R105
01.57.R.2.E822J	Resistor, chip	0603-8.2KΩ±5%	2	R88 R94
01.57.R.C.EC302	Fixed carbon film	RT1/6W-3KΩ	2	hand-make solder
01.57.R.Y.270	Zinc oxide varistor, for ESD	AVR-M1608C270MTABB	2	ESD4 ESD5
01.40.CON.DCZ.182	Connector	AV2-8.4-7B/PB	1	CON3
HS100 Component List for MainBoard (1239C-PV1) only for EU version				
01.57.R.2.E750F	Resistor, chip	0603-75Ω±1%	4	R49 R50 R51 R52
01.57.R.2.E202J	Resistor, chip	0603-2KΩ±5%	2	2R11 2R12
01.57.R.2.E332J	Resistor, chip	0603-3.3KΩ±5%	6	2R3 2R4 2R6 2R7 2R8 2R9
01.57.R.2.E472J	Resistor, chip	0603-4.7KΩ±5%	3	R104 R105 2R10
01.57.R.2.E822J	Resistor, chip	0603-8.2KΩ±5%	4	R88 R94 R92 R101
01.57.R.2.E153J	Resistor, chip	0603-15KΩ±5%	1	(2R13)
01.57.R.C.ED151	Fixed carbon film	RT1/4W-150Ω	1	2R5
01.57.R.C.ED102	Fixed carbon film	RT1/4W-1KΩ	2	2R1 2R2

Part Number	Description		Qty	Reference Designator
MainBoard (1239C-PV1)				
01.57.R.Y.270	Zinc oxide varistor, for ESD	AVR-M1608C270MTABB	6	ESD4 ESD5 ESD6 ESD7 ESD8 ESD9
01.54.CS.2.E104Y	Capacitor, multilayer ceramic, chip	0603-104 Y5V-20+80%/50V	3	CB100 CB101 CB109
01.13.L.Z.ESA50	Bead, chip	0603-50Ω	6	FB18 FB19 FB20 FB21 FB22 FB23
01.42.Q.S.EDTC343	Transistor	DTC343TKT146 SMD	3	2Q1 2Q2 2Q3
01.40.CON.DCZ.181	SCART Connector	CS-101 with shield	1	CON3
Amplifier Board (1241C-1)				
01.57.R.2.E000J	Resistor, chip	0603-0Ω ±5%	6	RR1 RR2 RR3 RR7 RR8 RR9
01.57.R.2.E151J	Resistor, chip	0603-150Ω±5%	1	R11
01.57.R.2.E271J	Resistor, chip	0603-270Ω±5%	1	R15
01.57.R.2.E102J	Resistor, chip	0603-1KΩ±5%	2	R8 R12
01.57.R.2.E152J	Resistor, chip	0603-1.5KΩ±5%	3	R7 R9 R10
01.57.R.2.E332J	Resistor, chip	0603-3.3KΩ±5%	1	AR5
01.57.R.2.E103J	Resistor, chip	0603-10KΩ±5%	7	R3 R4 R5 R6 AR9 AR16 AR23
01.57.R.2.E473J	Resistor, chip	0603-47KΩ±5%	1	R13
01.57.R.4.E4R7J	Resistor, chip	1206-4.7Ω±5%	10	AR6 AR7 AR10 AR11 AR13 AR14 AR17 AR18 AR20 AR21
01.57.R.4.E150J	Resistor, chip	1206-15Ω±5%	5	AR8 AR12 AR15 AR19 AR22
01.54.CS.2.E270N	Capacitor,multilayer ceramic, chip	0603-27P NPO±5%/50V	1	C2
01.54.CS.2.E101N	Capacitor,multilayer ceramic, chip	0603-100P NPO±5%/50V	1	C5
01.54.CS.2.E221N	Capacitor,multilayer ceramic, chip	0603-220P NPO±5%/50V	1	AC22
01.54.CS.2.E102X	Capacitor,multilayer ceramic, chip	0603-102 X7R±10%/50V	2	AC6 C4
01.54.CS.2.E153Y	Capacitor,multilayer ceramic, chip	0603-153 Y5V-20+80%/50V	1	C1
01.54.CS.2.E104Y	Capacitor,multilayer ceramic, chip	0603-104 Y5V-20+80%/50V	42	(CB2) CB3 (CB4) (AC1) (AC2) (AC3) (AC4) (AC7) (AC8) (AC9) (AC10) (AC13) (AC14) (AC15) AC18 (AC19) AC23 AC25 (AC26) (AC27) (AC29) AC31 AC32 AC40 AC42 AC50 AC51 AC55 AC59 AC60 AC68 AC70 AC78 AC79 AC83 AC87 AC88 AC98 AC96 AC100 AC101 AC102
01.54.CS.3.E102N	Capacitor,multilayer ceramic, chip	0805-102 NPO±5%/50V	10	(CB7) (CB8) (CB9) (CB10) (CB11) (CB12) (CB13) (CB14) (CB15) (CB16)
01.54.CS.2.E122X	Capacitor,multilayer ceramic, chip	0603-122 X7R±10%/50V	1	AC20
01.54.CS.3.E104Y	Capacitor,multilayer ceramic, chip	0805-104 Y5V+80-20%/50V	20	AC28 AC33 AC38 AC41 AC43 AC47 AC52 AC54 AC56 AC61 AC66 AC69 AC71 AC75 AC80 AC82 AC84
01.54.CS.4.E470	Capacitor,multilayer ceramic, chip	1206-470P X7R±10%/50V	5	AC30 AC46 AC58 AC74 AC86
01.33.CT.C1U50V	Solid Electrolyte Tantalum Chip Capacitor	C-1UF-50V	5	AC37 AC44 AC65 AC72 AC93
01.33.CT.B22U10V	Solid Electrolyte Tantalum Chip Capacitor	B-22UF-10V	2	AC11 AC24
01.34.CL.D.E68463J	Box-type metallized polyester film ca	0.68uF 63V J NPO P=5	5	AC36 AC49 AC64 AC77 AC92
01.34.CL.D.E10U25VC	Capacitor, AL.electrolytic	CD110-10UF/25V 5*11	1	EC5
01.34.CL.D.E100U16VC	Capacitor, AL.electrolytic	CD110-100UF/16V 5*11	3	EC1 EC2 AC12
01.34.CL.D.E1000U50V	Capacitor, AL.electrolytic	CD288H-1000UF/50V 13*25	3	AC34 AC62 AC90
01.34.CL.D.E47U16VC	Capacitor, AL.electrolytic	CD110-47UF/16V 5*11	2	EC3 EC4
01.13.L.Z.ESB50	Bead, chip	0805-50Ω	1	FB1
01.13.L.Z.ESB300	Bead, chip	0805-300Ω	2	L2 L3
01.13.L.L.D.127	Magnetic shielding Inductor	983BN-1003-15UH	10	LL1 LL2 LL3 LL4 LL5 LL6 LL7 LL8 LL9 LL10
01.41.D.PS.LL4148	Diode	LL4148 SMD	2	D4 D5
01.42.Q.S.EDTC343	Transistor	DTC343TKT146 SMD	1	Q2
01.00.FZ.ZZ.009	Jumper	5mm	1	Q1
01.44.IC.S.2100	IC, Apogee, Power Device	DDX2100, 36P	3	AU1 AU2 AU3
01.44.IC.S.8001	IC, Apogee, Digital Audio Processor	DDX8001, 64P, TQFP64	1	U3
01.44.IC.S.3522	IC, Analogic, Microprocessor Reset Circuit	AAT3522IGY-3.08, 3P, SST3	1	U2
01.44.IC.S.4558	IC, JRC, Pre-amp	NJM4558, 8P, SOP	1	U4
01.44.IC.S.9161A	IC, RichTek, Voltage Regulator	RT9161/A-33, 4P, SOT-89	1	U1
01.40.CON.DCZ.129	Connector	Vertical VH three holes two pins	1	CN1
01.40.CON.S10.E024	Connector	1.0-16P	1	CN5
01.40.CON.DCZ.172	Jack, YuanChang, Sub output jack	AV1-8.4-6G (Purple)	1	CN3
01.40.CON.DCZ.184	Amplifier output jack	WP10-23-3	1	CN4
01.40.CON.DPH.058	Connector	PH-5A	1	CN6

Part Number	Description		Qty	Reference Designator
Front Panel Board - VFD board (1813C)				
01.57.R.3.E472J	Resistor, chip	0805-4.7KΩ±5%	1	3R35
01.57.R.3.E103J	Resistor, chip	0805-10KΩ±5%	3	3R1 3R2 3R14
01.57.R.3.E203J	Resistor, chip	0805-20KΩ±5%	1	3R13
01.57.R.Y.270	Zinc oxide varistor, for ESD	AVR-M1608C270MTABB	2	ESD1 ESD2
01.54.CS.3.E300N	Capacitor,multilayer ceramic, chip	0805-30P NPO±5%/50V	1	3C18
01.54.CS.3.E560N	Capacitor,multilayer ceramic, chip	0805-56P NPO±5%/50V	2	C90 C91
01.54.CS.3.E101N	Capacitor,multilayer ceramic, chip	0805-100P NPO±5%/50V	3	3C4 3C19 3C20
01.54.CS.3.E473X	Capacitor,multilayer ceramic, chip	0805-473 X7R±10%/50V	2	3C21 3C22
01.54.CS.3.E104Y	Capacitor,multilayer ceramic, chip	0805-104 Y5V+80-20%/50V	1	3CB1
01.54.CS.3.E225Y	Capacitor,multilayer ceramic, chip	0805-225 Y5V-20+80%/16V	1	3CB5
01.13.L.Z.ESB220	Bead, chip	0805-220Ω	2	FB9 FB10
01.13.L.Z.ESB50	Bead, chip	0805-50Ω	1	FB5
01.13.L.L.S.E007	Inductance, chip	0805-10UH	1	FB11
01.34.CL.D.EX100U16V	Capacitor, AL.electrolytic	CD11X-100UF/16V 6.3*7	1	3C5
01.41.D.PS.LL4148	Diode	LL4148 SMD	1	3D12
01.42.Q.S.8050	Transistor	KTC8050 SMD	1	3Q2
01.42.Q.S.8550	Transistor	S8550 SMD	1	3Q1
01.44.IC.S.75710	IC, Sanyo, VFD driver	LC75710	1	3U2
01.44.IC.D.38B17	IR receiver	HL38B17, DIP	1	3IR1
01.16.1301F	VFD	VFD22-1301F	1	VFD
01.40.CON.DCZ.219	Headhpone jack	CKX-3.5-12	1	3J5
01.40.CON.DPH.023	Connector	PH-5A	1	3J3
01.40.CON.DPH.031	Connector	PH-7A	1	3J10
01.40.CON.DPH.041	Connector	PH-9A	2	3J11 3J12
Front Panel Board - Volume board (1814C)				
01.57.R.3.E000J	Resistor, chip	0805-0Ω ±5%	2	3R15 3R21
01.57.R.3.E101J	Resistor, chip	0805-100Ω±5%	2	3R17 3R19
01.57.R.3.E301J	Resistor, chip	0805-300Ω±5%	4	3R6 3R28 3R29 3R30
01.57.R.3.E222J	Resistor, chip	0805-2.2KΩ±5%	1	3R24
01.57.R.3.E103J	Resistor, chip	0805-10KΩ±5%	3	3R20 3R22 3R23
01.57.R.3.E104J	Resistor, chip	0805-100KΩ±5%	1	3R18
01.54.CS.3.E123X	Capacitor,multilayer ceramic, chip	0805-123 X7R±10%/50V	1	3CB8
01.54.CS.3.E104Y	Capacitor,multilayer ceramic, chip	0805-104 Y5V+80-20%/50V	1	3CB4
01.54.CS.3.E105Y	Capacitor,multilayer ceramic, chip	0805-105 Y5V-20+80%/16V	1	3CB7
01.34.CL.D.E47U10V2B	Capacitor, AL.electrolytic	CD11X-47UF/10V 4*7	1	3C3
01.34.CL.D.E22U35VB	Capacitor, AL.electrolytic	CD11X-22UF/35V 5*7(105℃)	8	3C1 3C8 3C9 3C10 3C11 3C12 3C14 3C15
01.34.CL.D.E100U35VD	Capacitor, AL.electrolytic	CD110-100UF/35V 6.3*12	2	3C6 3C7
01.34.CL.D.E22U50VB	Capacitor, AL.electrolytic	CD11X-22UF/50V 6.3*7	1	3C13
01.41.D.PS.LL4148	Diode	LL4148 SMD	9	3D1 3D2 3D3 3D4 3D5 3D6 3D7 3D8 3D10
01.41.D.WD.6V2	Zener Diode	6.2V	1	3DZ1
01.44.IC.S.9022	IC, NS, Vacuum Fluorescent Display Filament Driver	LM9022, 8P, SO8	1	3U3
01.36.VR.20K	Volume encoder	ED1612-24-24HC-F20(Z)	1	CON1
01.41.D.FD.65018	Diode, color is blue	HFBA65018CP Φ5	4	3LD1 3LD2 3LD3 3LD4
01.40.CON.DPH.031	Connector	PH-7A	1	3J9
Front Panel Board - Button board (1815C)				
01.57.R.3.E101J	Resistor, chip	0805-100Ω±5%	1	3R38
01.57.R.3.E471J	Resistor, chip	0805-470Ω±5%	1	3R7
01.57.R.3.E102J	Resistor, chip	0805-1KΩ±5%	1	3R4
01.57.R.3.E472J	Resistor, chip	0805-4.7KΩ±5%	7	3R3 3R25 3R26 3R27 3R31 3R34 3R36
01.57.R.3.E153J	Resistor, chip	0805-15KΩ±5%	1	3R5
01.54.CS.3.E220N	Capacitor,multilayer ceramic, chip	0805-22P NPO±5%/50V	2	3C16 3C17
01.54.CS.3.E821N	Capacitor,multilayer ceramic, chip	0805-820P NPO±5%/50V	2	3C23 3C24
01.54.CS.3.E104Y	Capacitor,multilayer ceramic, chip	0805-104 Y5V+80-20%/50V	2	3CB3 3CB6
01.54.CS.3.E225Y	Capacitor,multilayer ceramic, chip	0805-225 Y5V-20+80%/16V	1	3CB2
01.34.CL.D.E47U10V2B	Capacitor, AL.electrolytic	CD11X-47UF/10V 4*7	1	3C2
01.41.D.PS.LL4148	Diode	LL4148 SMD	1	3D9
01.42.Q.S.8550	Transistor	S8550 SMD	1	3Q5
01.00.JZ.E04000	Fundamental. Oscillator	4.000MHZ-49S-22P	1	3Y1
01.39.SW.QC.D665	Touch switch	6*6*5	5	3K2 3K3 3K4 3K5 3K6
01.44.IC.D.16C56A	IC, Microchip, MCU	PIC16C56A-04/P	1	3U1 (burn-in MCU code)

Part Number	Description		Qty	Reference Designator
Front Panel Board - Button board (1815C)				
01.40.CON.DPH.060	Connector	PH-7A	1	3J7
01.40.CON.DPH.041	Connector	PH-9A	1	3J8
01.40.CON.DTJ.006	Connector	TJC3-3A	1	3J4
Front Panel Board - Standby board (1816C)				
01.57.R.3.E621J	Resistor, chip	0805-620Ω±5%	2	3R11 3R111
01.57.R.3.E202J	Resistor, chip	0805-2KΩ±5%	2	3R12 3R122
01.57.R.3.E472J	Resistor, chip	0805-4.7KΩ±5%	2	3R9 3R10
01.41.D.PS.LL4148	Diode	LL4148 SMD	2	3D14 3D15
01.42.Q.S.8050	Transistor	KTC8050 SMD	1	3Q3
01.42.Q.S.8550	Transistor	S8550 SMD	1	3Q4
01.41.D.FD.503	Diode, color is blue & orange	HFT503CPB0	2	3LCD1 3LCD2
01.39.SW.QC.D665	Touch switch	6*6*5	2	3K1 3K7
01.40.CON.DPH.060	Connector	PH-7A	1	3J6
Power Supply Board (1356C)				
01.57.R.R.5D9	NTC thermistor	NTC-5D-9	1	NTC
01.57.R.Y.10K	Zinc oxide varistor	10K.471	1	RV1
01.57.R.C.EC100	Fixed carbon film	RT1/6W-10Ω	4	R3 R5 R23 R25
01.57.R.C.EC101	Fixed carbon film	RT1/6W-100Ω	1	R16
01.57.R.C.EC221	Fixed carbon film	RT1/6W-220Ω	2	R13 R14
01.57.R.C.EC331	Fixed carbon film	RT1/6W-330Ω	1	R30
01.57.R.C.EC102	Fixed carbon film	RT1/6W-1KΩ	3	R27 R31 R36
01.57.R.C.EC222	Fixed carbon film	RT1/6W-2.2KΩ	4	R18 R19 R20 R29
01.57.R.C.EC512	Fixed carbon film	RT1/6W-5.1KΩ	6	R33 R32 R11 R12 R15 R17
01.57.R.C.EC103	Fixed carbon film	RT1/6W-10KΩ	1	R10
01.57.R.C.EC123	Fixed carbon film	RT1/6W-12KΩ	1	R22
01.57.R.C.EC303	Fixed carbon film	RT1/6W-30KΩ	1	R9
01.57.R.C.EC104	Fixed carbon film	RT1/6W-100KΩ	1	R21
01.57.R.C.ED200	Fixed carbon film	RT1/4W-20Ω	1	R26
01.57.R.C.ED301	Fixed carbon film	RT1/4W-300Ω	1	R39
01.57.R.C.ED102	Fixed carbon film	RT1/4W-1KΩ	1	R35
01.57.R.C.ED473	Fixed carbon film	RT1/4W-47KΩ	1	R4
01.57.R.C.ED303	Fixed carbon film	RT1/4W-30KΩ	2	R7 R8
01.57.R.C.ED474	Fixed carbon film	RT1/4W-470KΩ	1	R2
01.57.R.C.ED105	Fixed carbon film	RT1/4W-1MΩ	1	R0
01.57.R.C.40E435	Cermet Resistor	RI40-1/2W-4.3MΩ	1	R6
01.57.R.C.EF683	Fixed carbon film	RT1W-68KΩ	2	R1 R24
01.57.R.C.EGR22	Fixed carbon film	RT2W-0.22Ω	1	R28
01.57.R.C.EG102	Fixed carbon film	RT2W-1KΩ	2	R34 R38
01.00.CD.GY.E104275V	Hi-V metallized polyester film	104/275V X2	3	CX3 CX1 CX2
01.00.CD.GY.E471400V	Hi-V metallized polyester film	471/400V Y1	4	CY3 CY4 CY5 CY6
01.00.CD.GY.E221400V	Hi-V metallized polyester film	221/400V Y1	2	CY1 CY2
01.00.CD.CP.E1031KV	Hi-V metallized polyester film	103/1KV	2	C1 C10
01.00.CD.DS.E47150V	Radial leads mlcc	471/50V X7R±10%	1	C13
01.00.CD.DS.E47325V	Radial leads mlcc	473/25V X7R±10%	3	C2 C8 C14
01.00.CD.DS.E10425V	Radial leads mlcc	104/25V X7R±10%	6	C3 C4 C5 C6 C7 C11
01.00.CD.DS.E27250V	Radial leads mlcc	272/50V X7R±10%	1	C12
01.00.CD.JZ.104100VJ	Metallized capacitor	CT-104/100V	1	C16
01.34.CL.D.E1U50VC	Capacitor, AL.electrolytic	CD110-1UF/50V 5*11	2	EC22 EC25
01.34.CL.D.E2U225VC	Capacitor, AL.electrolytic	CD110-2.2UF/25V 5*11	1	EC10
01.34.CL.D.E47U50VCD	Capacitor, AL.electrolytic	CD110-47UF/50V 6.3*12	2	EC1 EC17
01.34.CL.D.E100U16VC	Capacitor, AL.electrolytic	CD110-100UF/16V 5*11	3	EC23 EC24 C9
01.34.CL.D.E100U25VD	Capacitor, AL.electrolytic	CD110-100UF/25V 6.3*12	4	EC3 EC4 EC5 EC6
01.34.CL.D.E1000U35V	Capacitor, AL.electrolytic	CD288H-1000UF/35V 12*25	4	EC18 EC19 EC20 EC21
01.34.CL.D.E1000U16V	Capacitor, AL.electrolytic	CD288H-1000UF/16V 10*20	2	EC13 EC14
01.34.CL.D.E220U10VD	Capacitor, AL.electrolytic	CD110-220UF/10V 5*12	2	EC9 EC15
01.34.CL.D.E220U16VD	Capacitor, AL.electrolytic	CD110-220UF/16V 6.3*12	4	EC7 EC8 EC11 EC12
01.34.CL.D.E220U400V	Capacitor, AL.electrolytic	CD294-220UF/400V 25*40	1	EC16
01.34.CL.D.E4U7160V	Capacitor, AL.electrolytic	CD110-4.7UF/160V 8*13	1	EC2
01.13.L.L.D.013	Filter inductor	L630-100	1	L7
01.13.L.L.D.085	Filter inductor	L630(10UH)	1	L6
01.13.L.L.D.E002	Filter inductor	LH0608-20UH	4	L2 L3 L4 L5

Part Number	Description		Qty	Reference Designator
Power Supply Board (1356C)				
01.13.L.L.D.132	Common Mode Choke	LCL-UF1601(30mH)	1	LF2
01.13.L.L.D.133	Common Mode Choke	LCL-203A(20mH)	1	LF1
01.13.L.L.D.037	Inductor	10UH	1	FB1
01.13.L.L.D.134	Filter inductor	470UH	1	LF3
01.41.D.PD.8M	Bridge Rectifiers	KBU8M	1	BG1
01.41.D.PD.21DQ10	Diode	21DQ10 DIP	1	D7
01.41.D.PD.31DQ06	Diode	31DQ06 DIP	1	D9
01.41.D.PD.FR107	Fast recovery rectifier diode	FR107 DIP	8	D1 D2 D3 D5 D6 D8 D13 D15
01.41.D.PD.IN4148	Switching Diode	IN4148 DIP	4	D10 D11 D12 D16
01.41.D.PD.20A20	Schottky diode	FCH20A20 DIP	2	D17 D18
01.41.D.PD.207	Fast recovery rectifier diode	FR207 DIP	1	D14
01.41.D.WD.24V	Zener Diode	24V	1	ZD1
01.41.D.WD.18V	Zener Diode	18V	1	ZD2
01.41.D.PD.MCR100-6	Silicon controlled rectifier	MCR100-6 DIP	1	SC1
01.42.Q.D.5551	NPN Transistor	2N5551 DIP	2	Q1 Q3
01.42.Q.D.9014	NPN Transistor	C9014 DIP	2	Q4 Q7
01.42.Q.D.8550	PNP Transistor	8550 DIP	1	Q5
01.44.IC.D.11N90	MOS-FET	FQA11N90 DIP	1	Q6
01.44.IC.D.L7805	IC, NS, Voltage Regulator	L7805 DIP	1	IC5
01.44.IC.D.7812	IC, NS, Voltage Regulator	L7812 DIP	1	IC3
01.44.IC.D.7912	IC, NS, Voltage Regulator	L7912 DIP	1	IC4
01.44.IC.D.BA033T	IC, Rohm, Voltage Regulator	BA033T DIP	1	IC6
01.44.IC.D.7554	IC, Fairchild, PWM Controller	FAN7554 DIP	1	IC2
01.44.IC.D.5L0380R	IC, Fairchild, Power Switch	KA5L0380RYDTU DIP	1	IC1
01.44.IC.D.KA431A	IC, Fairchild, Precision Adjustable Voltage Regulator	KA431AZ DIP	2	IC7 IC8
01.44.IC.D.PC817	IC, Sharp, Photoelectric Coupler	PC817 DIP	2	PH1 PH2
01.40.CON.DCZ.129	Connector	Vertical VH three holes two pins(white)	2	CN2 CN3
01.40.CON.DCZ.130	Connector	Vertical VH three holes two pins(orange)	1	CN1
01.40.CON.DTJ.006	Connector	TJC3-3A	1	CN4
01.40.CON.DTJ.028	Connector	TJC3-10A	1	CN5
01.40.CON.DTJ.011	Connector	TJC3-5A	1	CN6
01.40.CON.DCZ.131	Fuse Holder	BLX-2A	1	FU1
01.38.FUSE.D.315AL	Fuse	T3.15AL/250V	1	FU1
01.13.L.R.082	Transformer	BCK-ER2802S1	1	TR1
01.13.L.R.081	Transformer	BCK-EC4201A	1	TR2

HS100 Mechanical Parts List				
Part Number	**Description**		**Qty**	**Notes**
01.15.JX.DV342	loader	DV342 loader	1	
01.49.06	Tuner module	TFCF1E803A EU version	1	EU version
01.49.07	Tuner module	TFCF1E804A US version	1	US version
01.00.WJ.TJ.415	HS100 metals part	HS100-chassis	1	HS100-PT01
01.00.WJ.TJ.416	HS100 metals part	HS100-top cover	1	HS100-PT02
01.00.WJ.TJ.417	HS100 metals part	HS100-rear panel (EU)	1	HS100-PT03
01.00.WJ.TJ.418	HS100 metals part	HS100-rear panel (US)	1	HS100-PT03
01.00.WJ.TJ.419	HS100 metals part	HS100-heatsink support	1	DSC1000-PT07
01.00.WJ.TJ.544	HS100 metals part	HS100-top cover support	1	HS100-PT04
01.13.L.H.011	Magnetism annulus	H16*9*28-HA	1	toggle headphone line
01.00.WJ.TJ.420	heatsink	135*95*45mm	1	DSC1000-PT08 for AMP board
01.00.WJ.TJ.317	heatsink	16*12*32mm	2	match D17，D18
01.00.WJ.TJ.421	heatsink	50*19*35mm	1	match Q6 on SMPS
01.00.WJ.TJ.268	heatsink	28*28*10mm	1	for U4 on mainboard
01.00.WJ.QT.041	3 pin grounding piece	M4	4	G1 G2 G3 G4 on SMPS
01.00.SJ.HS100.001	HS100 plastic part	HS100－front panel	1	HS100-RE01
01.00.SJ.HS100.002	HS100 plastic part	HS100－5 in 1 button	1	HS100-RE02
01.00.SJ.HS100.003	HS100 plastic part	HS100－2 in 1 button	1	HS100-RE03
01.00.SJ.HS100.004	HS100 plastic part	HS100－5 in 1 button collar	1	HS100-RE04
01.00.SJ.HS100.005	HS100 plastic part	HS100－Open/Close button collar	1	HS100-RE05
01.00.SJ.HS100.006	HS100 plastic part	HS100－volume chamfer	1	HS100-RE06
01.00.SJ.HS100.007	HS100 plastic part	HS100－power indicator lampshade	1	HS100-RE07
01.00.SJ.HS100.008	HS100 plastic part	HS100－volume button lampshade	1	HS100-RE08
01.00.SJ.HS100.009	HS100 plastic part	HS100－disc tray door	1	HS100-RE09
01.00.SJ.HS100.010	HS100 plastic part	HS100－volume button	1	HS100-RE10
01.00.SJ.HS100.011	HS100 plastic part	HS100－pedestal underlay	2	HS100-RE11
01.00.SJ.HS100.012	HS100 plastic part	HS100－len for tray door	1	HS100-RE12
01.00.SJ.HS100.013	HS100 plastic part	HS100－len for VFD	1	HS100-RE13
01.00.SJ.HS100.014	HS100 plastic part	HS100－little plastic piece	1	HS100-RE14
01.00.SJ.1000A.016	HS100 plastic part	1000A-IR receiver support	1	
01.00.FZ.TG.025	Screw map	Φ3*4mm	2	
01.00.SJ.QT.005	PCB plastic frame	Φ7*8mm	8	
01.00.FZ.QT.153	astigmatism PVC	Φ45.5*Φ9.5mm	1	between volume button and PCB
01.00.SJ.QT.001	VFD filter	105.7mm*24.3mm*0.5	1	
01.40.CON.DCZ.178	AC power socket	WS-044-0	1	
01.00.SB.035	Metal logo	47mm"Harman" supper slim logo	1	stick on the len for tray door
01.00.SB.036	Metal logo	100mm"Harman" supper slim logo	1	stick on the top cover
01.00.SB.037	Metal logo	HS100 supper slim logo	1	stick on len for front panel
01.13.L.H.020	Magnetism annulus	M248	1	for AC power cord
01.00.FZ.QT.122	Plastic fastener	12mm	3	
01.47.CNT.LJX.7.026	Connect cable	2.0-5Y-5Y-260mm -B	1	connect loader and mainboard
01.47.CNT.LJX.7.087	Connect cable	2.0-6Y-6Y-320mm -B	1	connect loader and mainboard
01.47.CNT.LJX.7.096	Connect cable	VH 40mm	1	for CN1 on power supplier board
01.47.CNT.LJX.7.088	Connect cable	2.0-9Y-9Y-320mmA	1	connect VFD board and mainboard
01.47.CNT.LJX.4.015	Connect cable	2.54-10Y-2.0-160mmB	1	connect power supplier board and mainboard
01.47.CNT.LJX.4.016	Connect cable	2.54-5Y-2.0-200mmA	1	connect power supplier board and amplifier board
01.47.CNT.LJX.7.097	Connect cable	VH-3Y-2Y-2Y-180mmB	1	connect power supplier board and amplifier board
01.47.CNT.LJX.7.172	Connect cable	VH-3Y-2Y-700mm	1	connect power supplier board and AC power socket
01.47.CNT.LJX.7.173	Connect cable	2.0-5Y-5Y-720mmA (with shield)	1	connect front panel board and mainboard
01.47.CNT.LJX.4.013	Connect cable	2.54-3Y-3Y-150mmA	1	connect VFD board and power supplier board
01.47.CNT.LJX.7.090	Connect cable	2.0-7Y-7Y-240mmA	1	connect 1815C and 1816C
01.47.CNT.LJX.7.150	Connect cable	2.0-9Y-9Y-60mmB	1	connect 1815C and 1813C
01.47.CNT.LJX.7.092	Connect cable	2.0-7Y-7Y-80mmA	1	connect 1814C and 1813C
01.47.CNT.LJX.5.052	Grounding cable	40mm(solder one end and grounding piece	1	connct 1813C and ground
01.47.CNT.LJX.5.023	Grounding cable	35mm	1	connect point A and B on power supplier board

01.48.BPX.1.E084	flat cable	1.0*16P*50mmA	1	connect amplifier board and mainboard
01.48.BPX.1.E085	flat cable	1.25*11P*70mmA	1	connect tuner module and mainboard
01.48.BPX.2.E031	flat cable	0.5*24P*190mmB	1	connect loader and mainboard
01.00.DP.XJ.E192	silica gel underlay	50.6*4.2*1.5mm (with 500# white glue)	4	HS100-H01 for pedestal underlay
01.00.DP.HM.E165	sponge	10*10*4mm (with double sides glue)	1	for IR receiver support
01.00.DP.HM.E199	sponge	20*20*7mm (with double sides glue)	2	for VFD
01.00.DP.HM.E142	sponge	20*10*2.5mm (with double sides glue)	1	fixed plat cable on the chassie
01.00.DP.JY.E110	Insulated PVC	130*126mm (with single side glue)	1	for power supplier
01.00.DP.JY.E149	Insulated PVC	80*55*0.5mm （transparence PVC with sir	1	stick on the top cover support
01.00.DP.HM.E198	sponge	20*20*11mm (with double sides glue)	1	place between the main transfer and chassis
01.00.DP.HM.E250	sponge	20*20*10mm (with single side glue)	3	place under the amplifier board
01.00.DP.HM.E207	sponge	20*10*10mm (with single side glue)	2	place under the amplifier board
01.00.DP.HM.E015	sponge	20*20*3.5 (with single side glue)	2	place between the amplifier board and heatsink
01.00.DP.HM.E252	sponge	20*20*10mm (with double sides glue)	1	place between tuner module and left side of chassis
01.00.DP.HM.E255	sponge	70*30*67mm(+0/-0.5 with single side glue)	1	place on the chassis to support the top cover
01.00.DP.HM.E243	sponge	165*12*2mm (with single side glue)	1	
01.00.DP.JY.111	Talc piece	20*24mm	1	match Q6 on SMPS
01.00.DP.JY.112	Diathermanous Se Rubber	16*11*1mm	3	place on AU1 AU2 AU3
01.00.DD.PM.074	sponge with electric material	10*10*15mm	5	fixed on the mainboard and amplifier board
01.00.DD.QT.E049	I/O electric interleaver	WNH4P-S-46.2-2-96-N-P	1	cover on the amplifier output jack
01.00.DD.QT.E050	electric cloth	95*12mm	1	connect the bottom ground and amplifier output jack

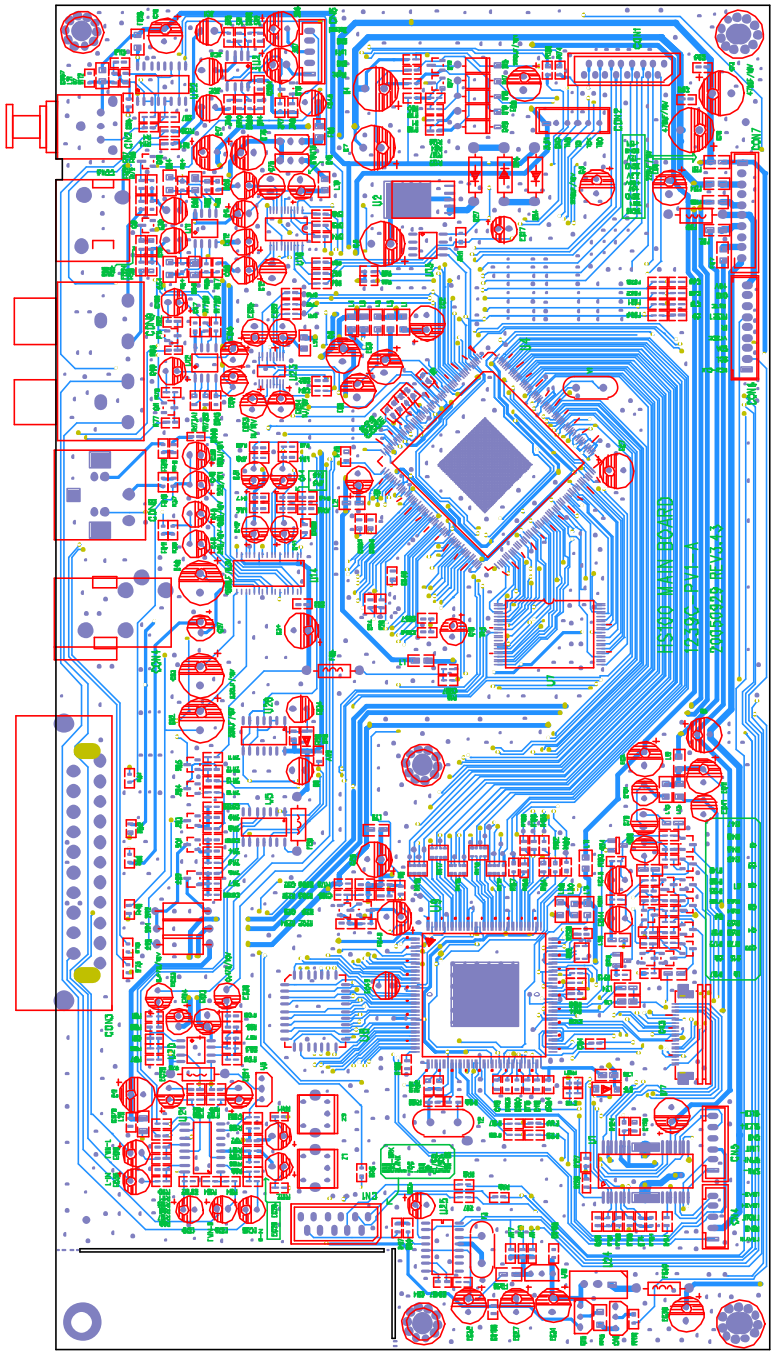

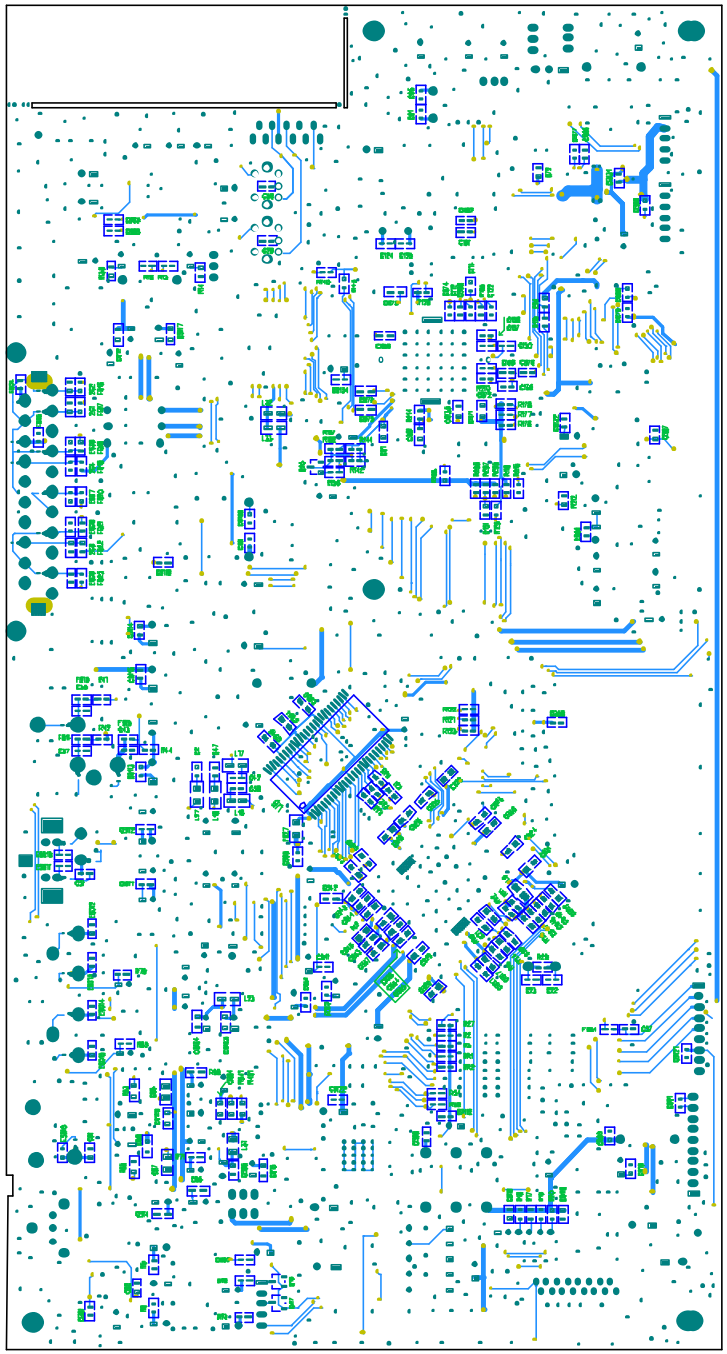

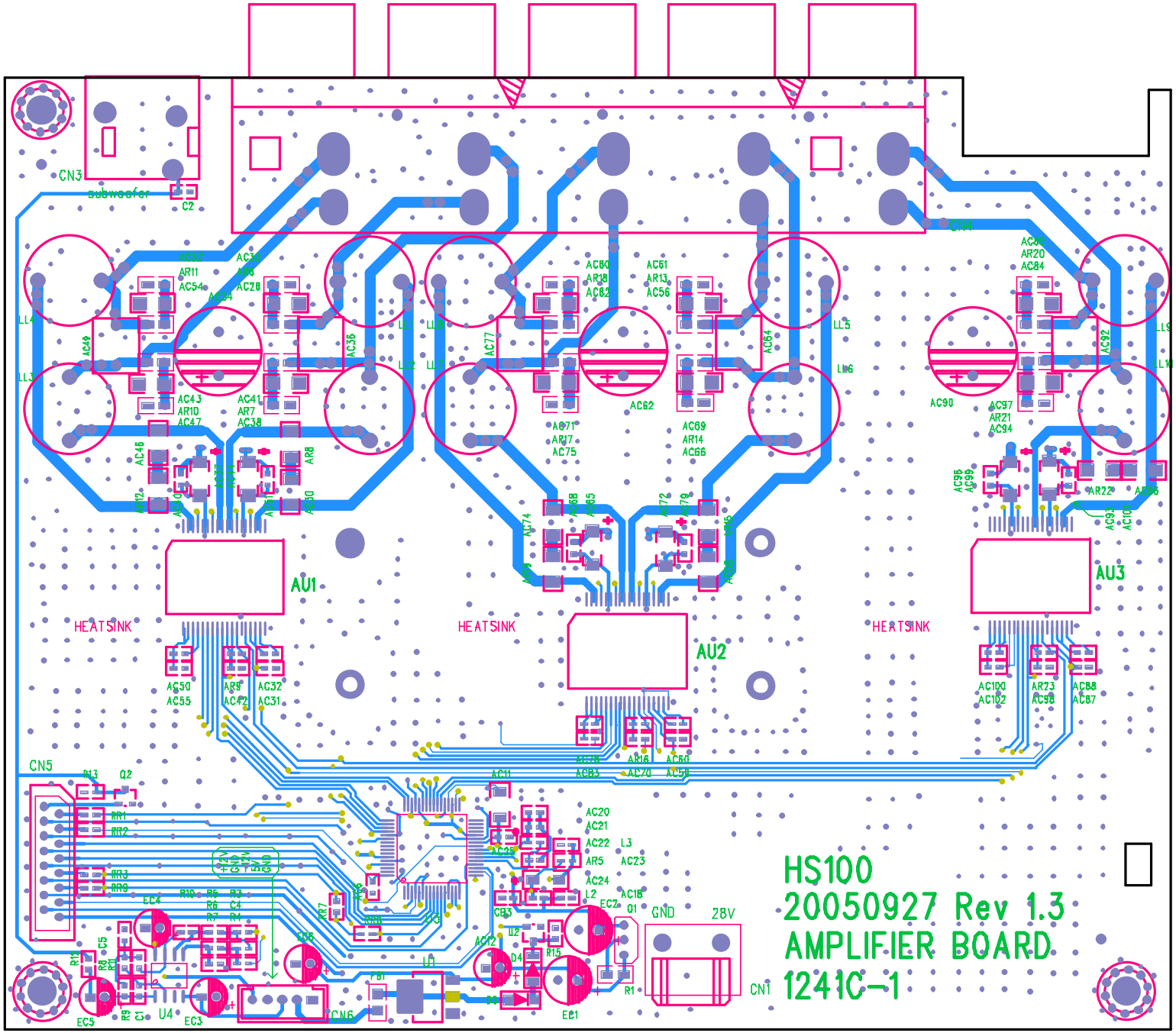
CN3
subwoofer
C2
CN4
AU1
AU2
AU3
HEATSINK
HEATSINK
HEATSINK
CN5
CN1
GND
28V
HS100
20050927 Rev 1.3
AMPLIFIER BOARD
1241C-1

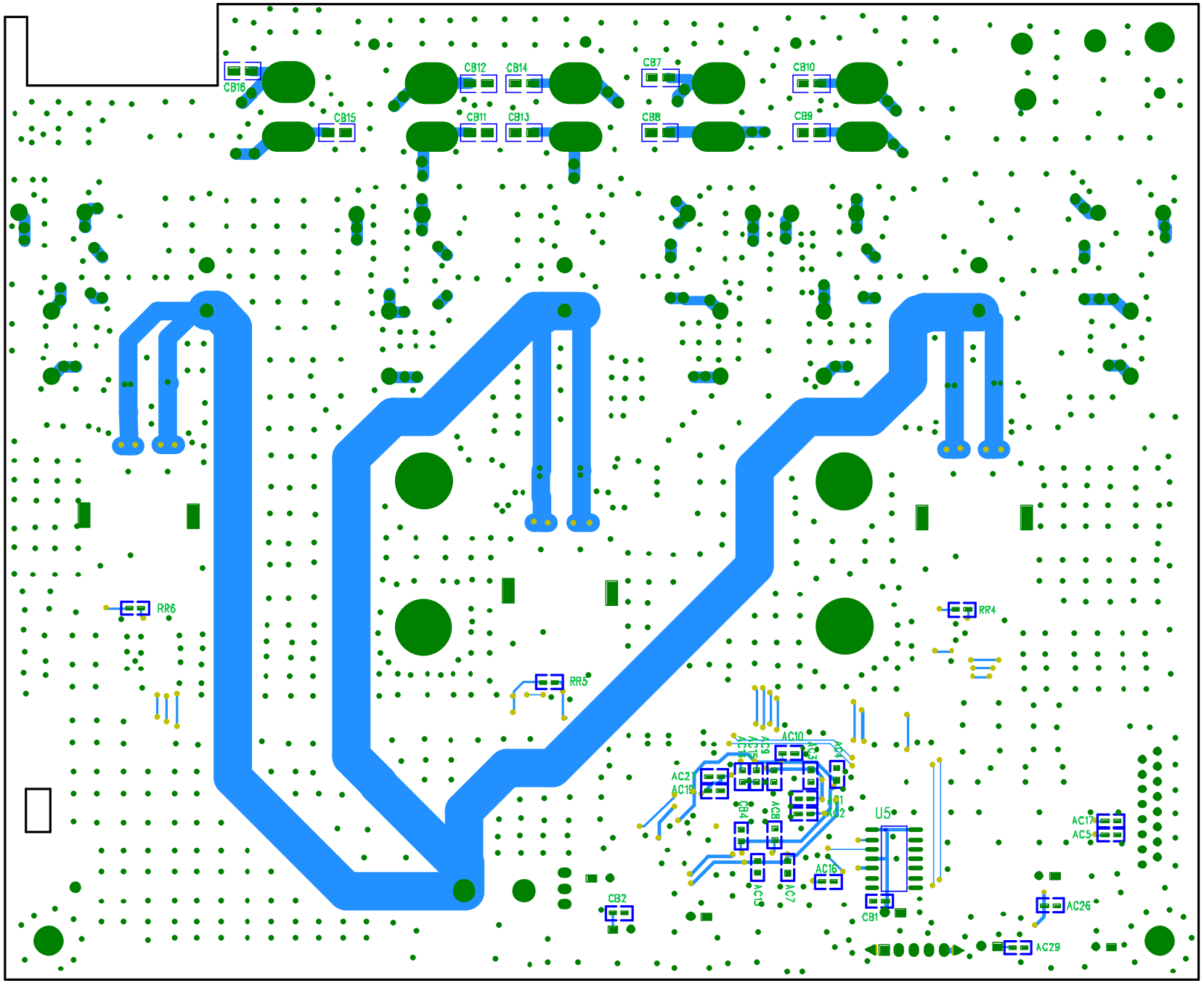
CB16
CB15
CB12
CB14
CB11
CB13
CB7
CB8
CB10
CB9
RR6
RR5
RR4
AC10
AC21
AC19
CB4
AC8
AC13
AC7
AC16
U5
CB1
CB2
AC17
AC5
AC26
AC29

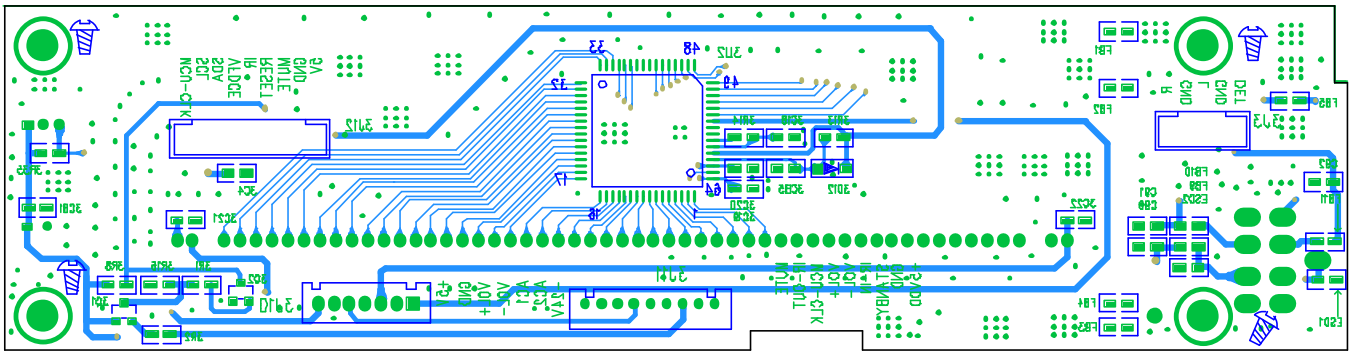

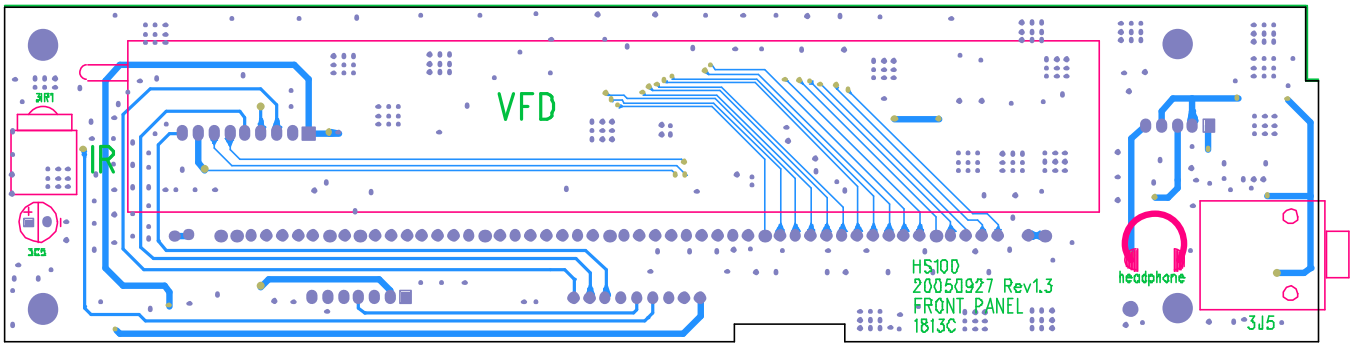
VFD
IR
HS100
20050927 Rev1.3
FRONT PANEL
1813C
headphone

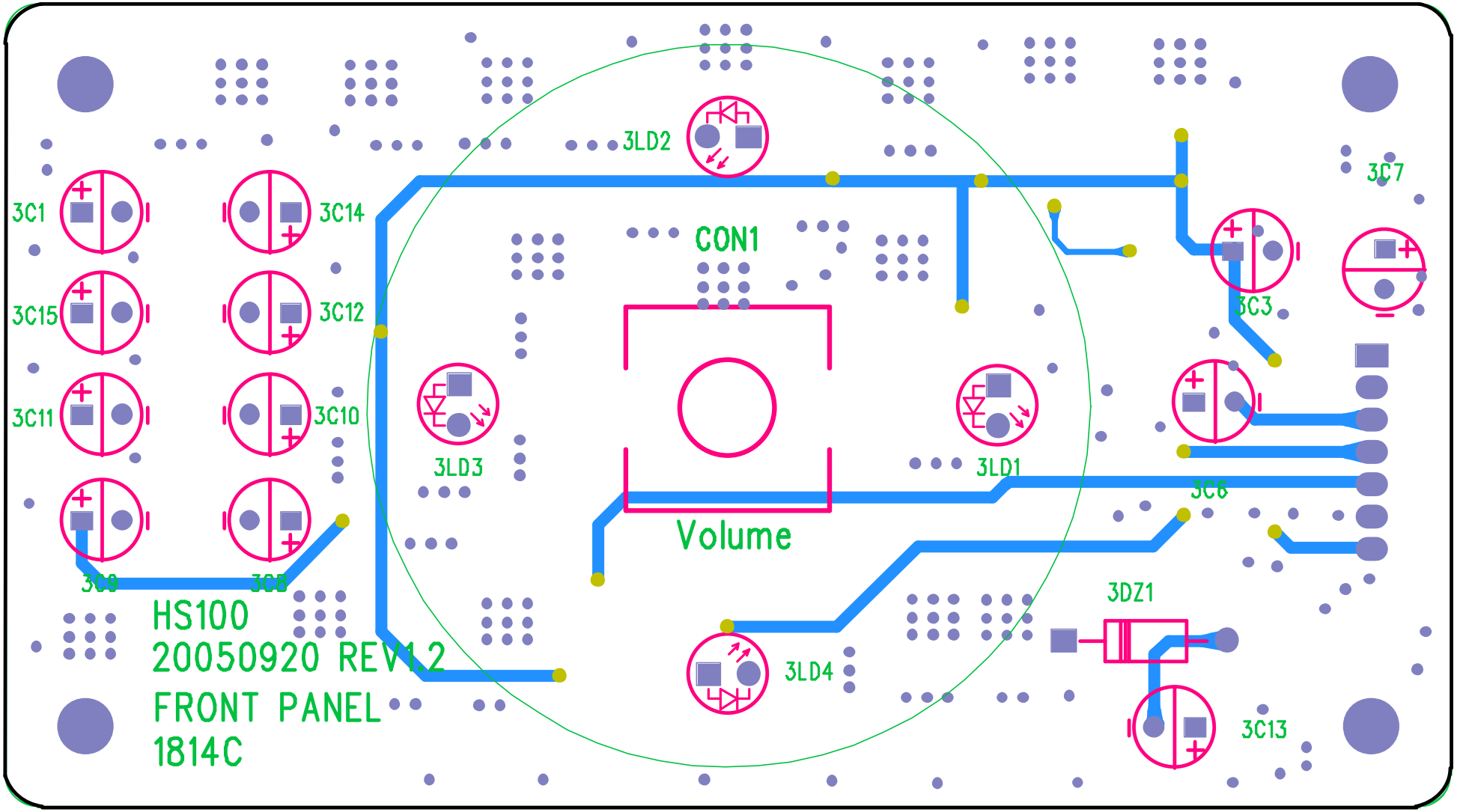
3LD2
3C1
3C14
CON1
3C7
3C15
3C12
3C3
3C11
3C10
3LD3
3LD1
3C6
Volume
3C9
3C8
3DZ1
HS100
20050920 REV1.2
FRONT PANEL
1814C
3LD4
3C13

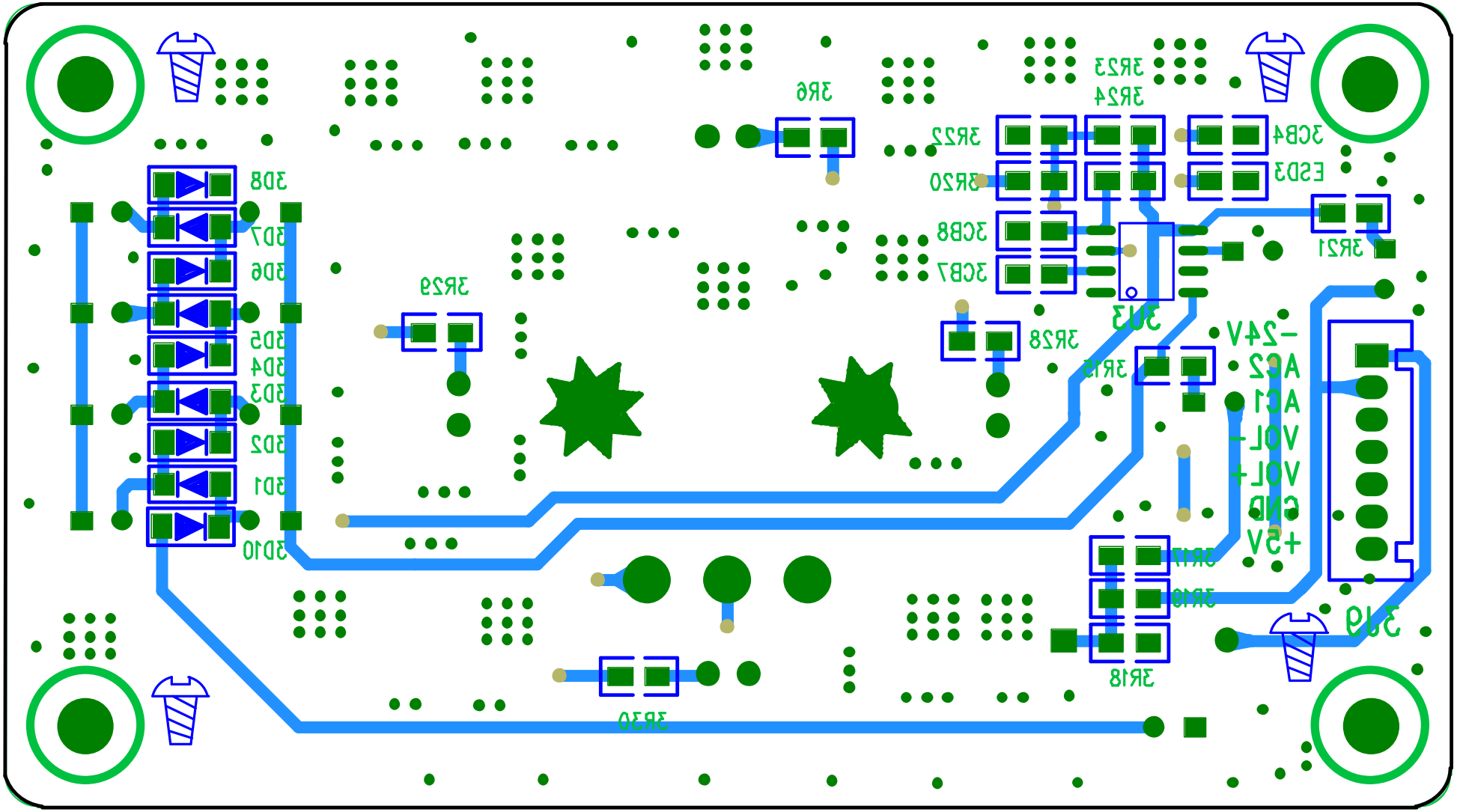
3R6
3R22
3R20
3CB8
3CB7
3R29
3R28
3R23
3R24
3CB4
ESD3
3R21
3U3
3R15
-24V
AC2
AC1
VOL-
VOL+
GND
+5V
3R17
3R19
3R18
3U9
3D8
3D7
3D6
3D5
3D4
3D3
3D2
3D1
3D10
3R30

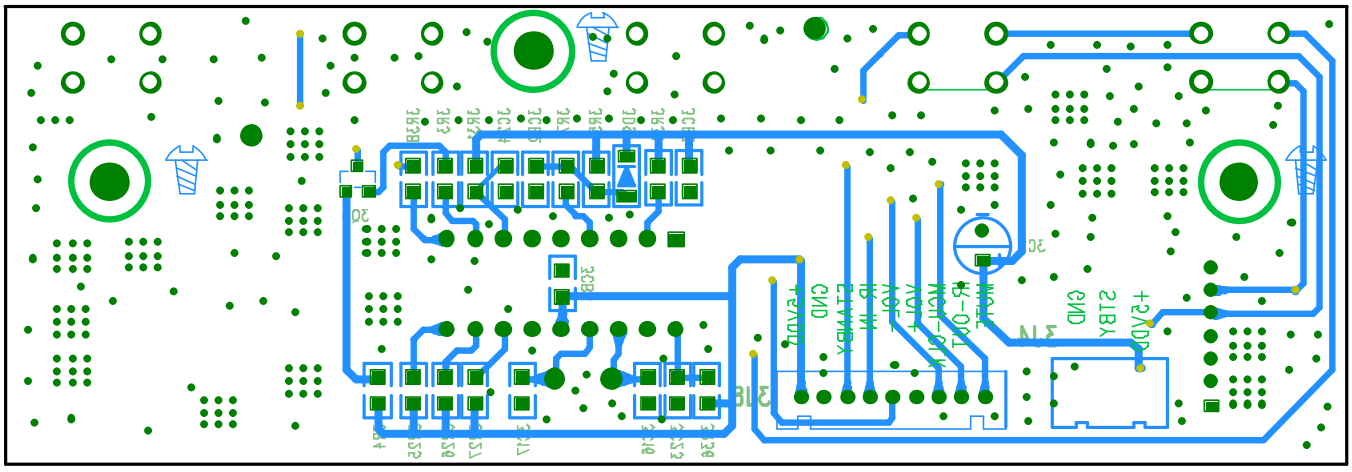

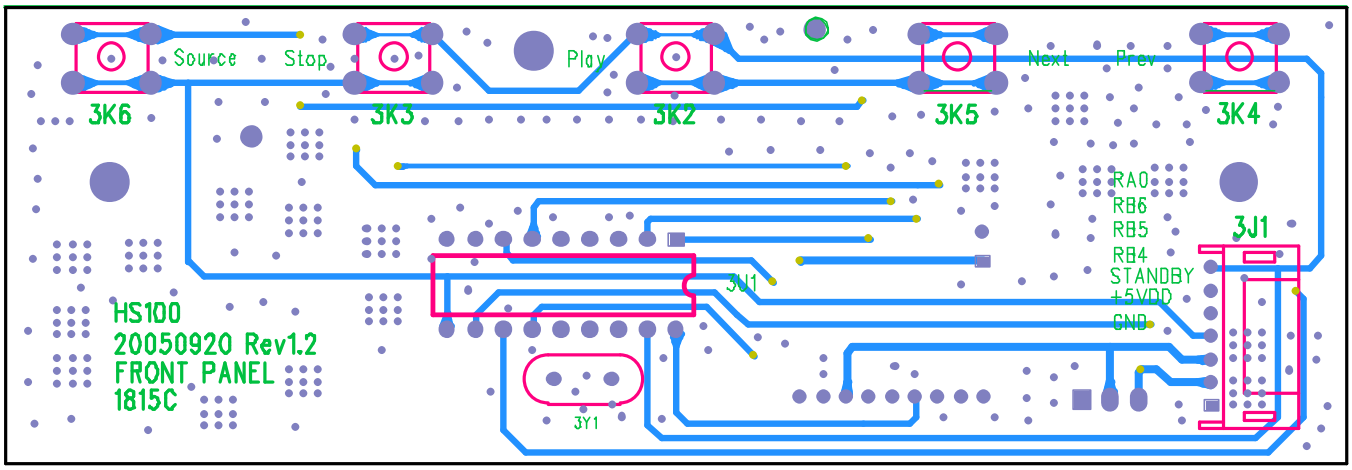
Source
Stop
Play
Next
Prev
3K6
3K3
3K2
3K5
3K4
RA0
RB6
RB5
RB4
STANDBY
+5VDD
GND
3J1
HS100
20050920 Rev1.2
FRONT PANEL
1815C
3Y1

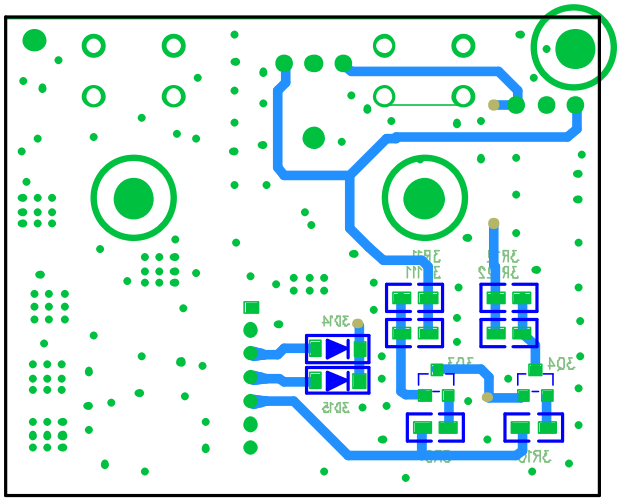

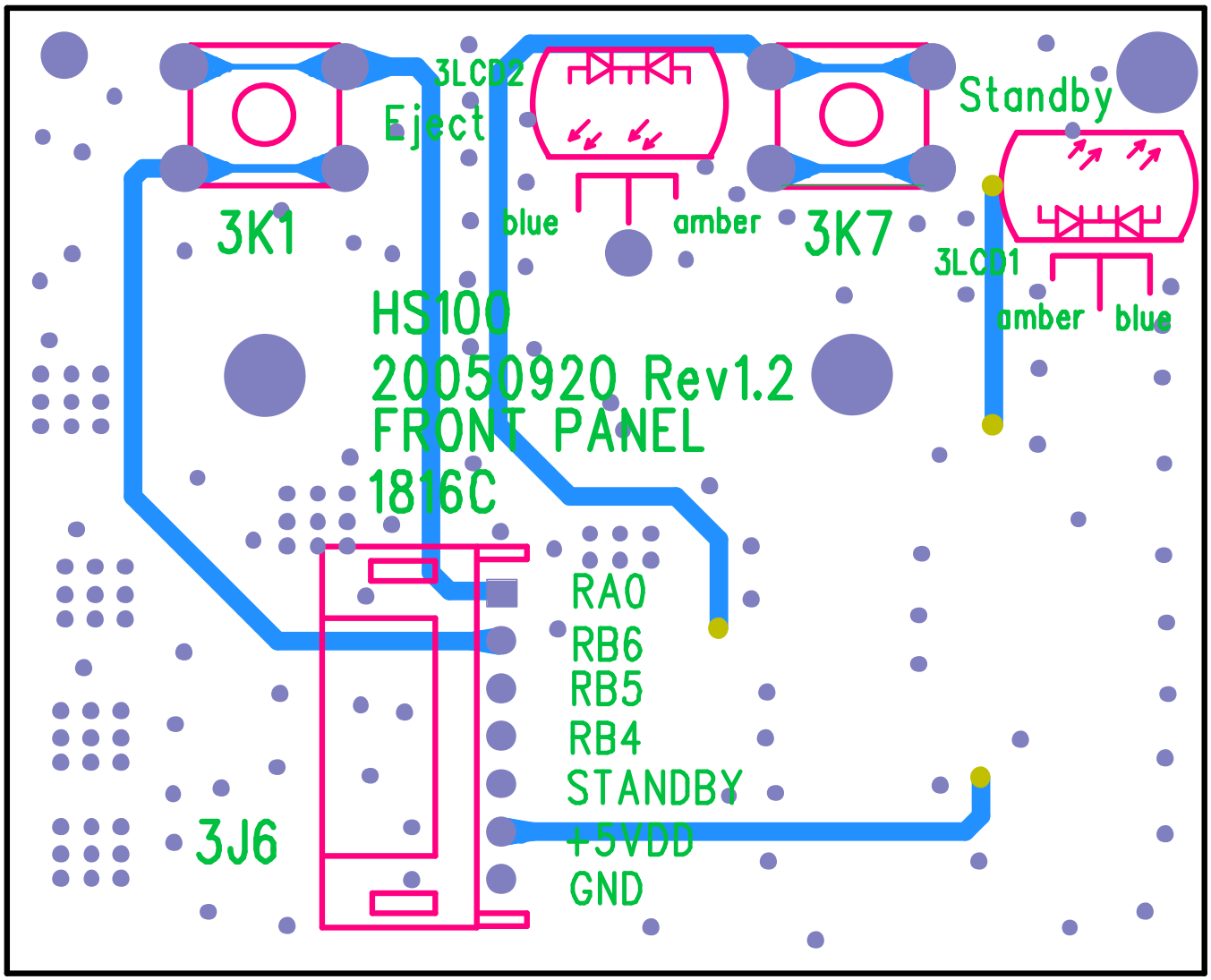
3LCD2
Eject
3K1
blue
amber
3K7
Standby
3LCD1
amber
blue
HS100
20050920 Rev1.2
FRONT PANEL
1816C
RA0
RB6
RB5
RB4
STANDBY
+5VDD
GND
3J6

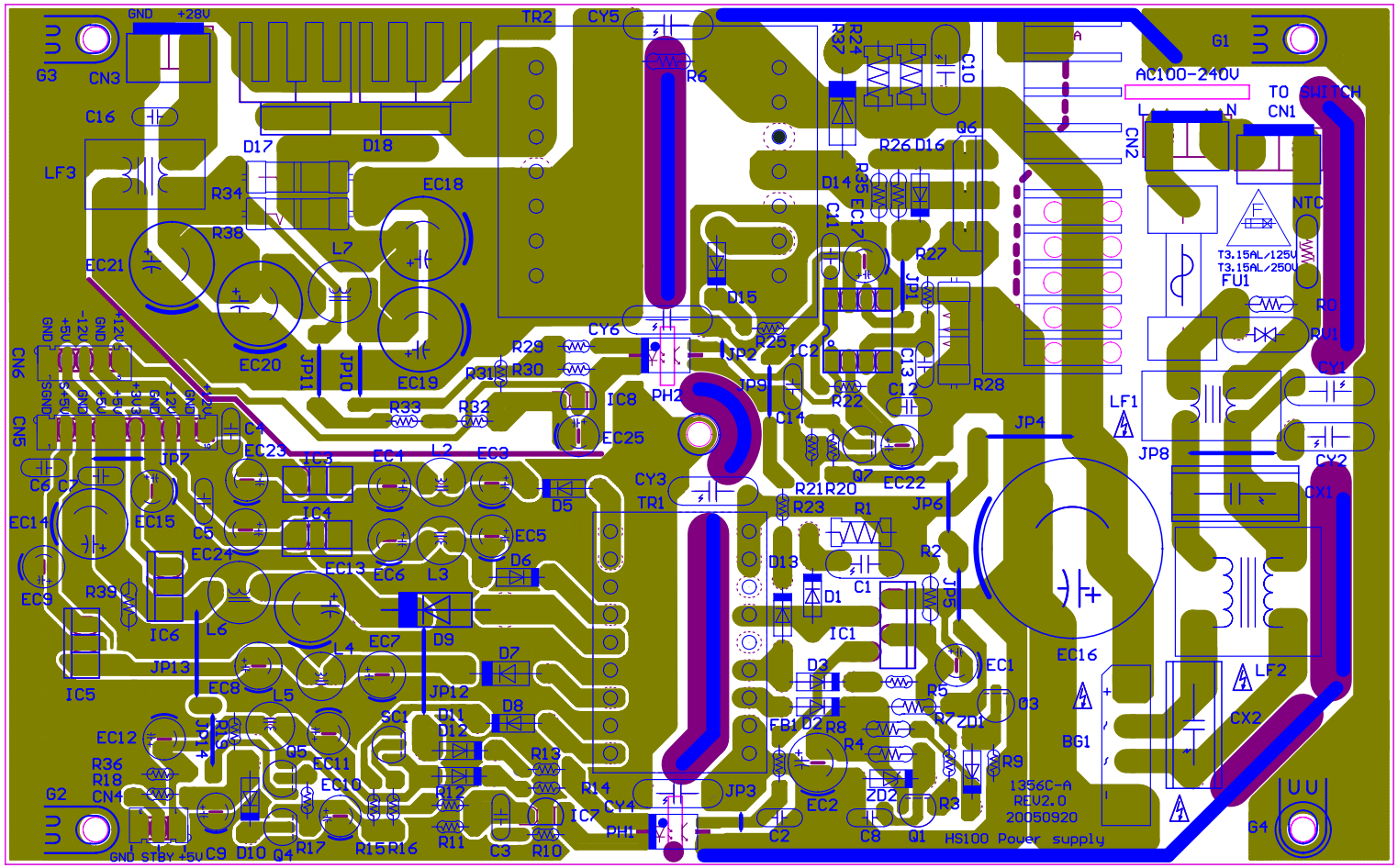
AC100-240V
TO SWITCH
CN1
CN2
CN3
CN4
CN5
CN6
FU1
T3.15AL/125V
T3.15AL/250V
NTC
1356C-A
REV2.0
20050920
HSI00 Power supply

Semiconductor Pinouts for HS 100

8050, NPN Transistor, SMD

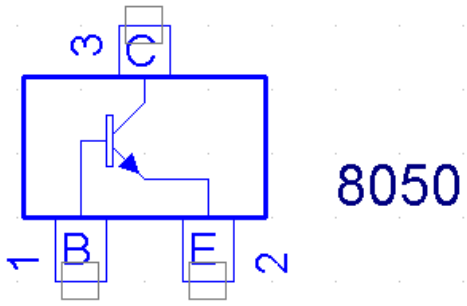

8550, NPN Transistor, SMD

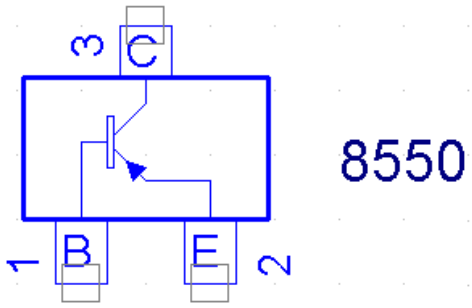

9014, NPN Transistor, SMD

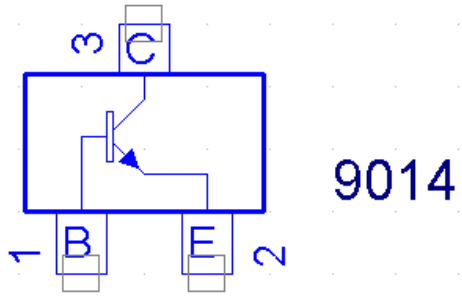

DTC343TK, NPN Transistor, SMD

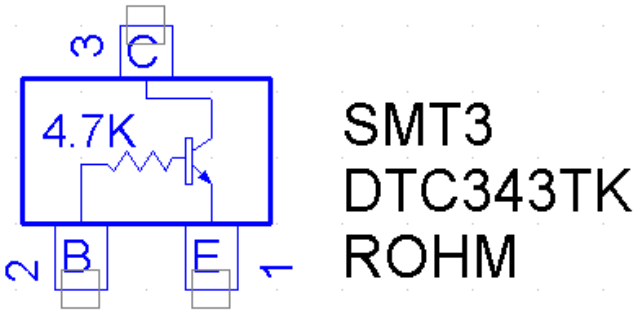

DTC114EKA, PNP Transistor, SMD

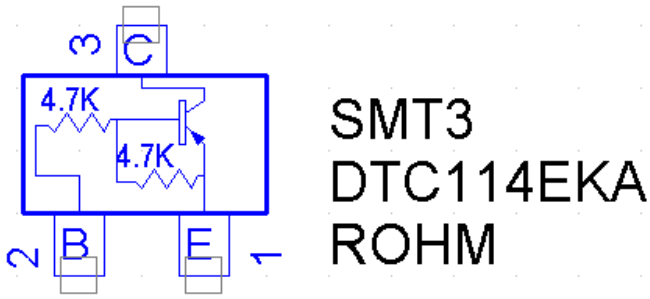

2SK3018, Silicon N-channel MOSFET, SMD

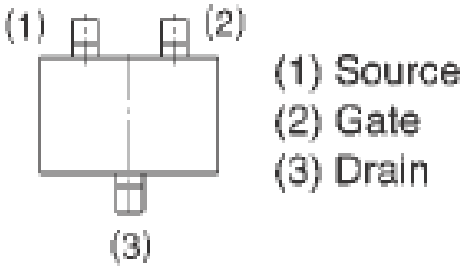

AT27C020-70JC, Servo Memory, SMD

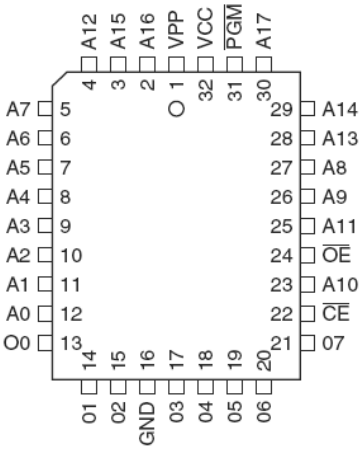

PT28C020P-90, Servo Memory, SMD

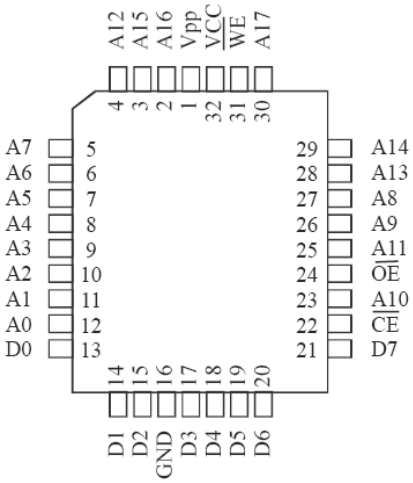

LM833M, pre-amp, SMD

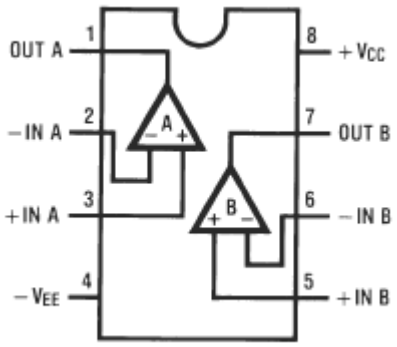

NJM4558, pre-amp, SMD

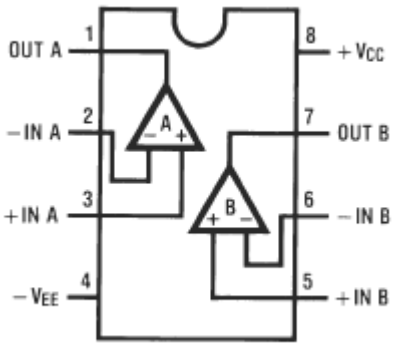

74HCT14, Hex inverting Schmitt trigger, SMD

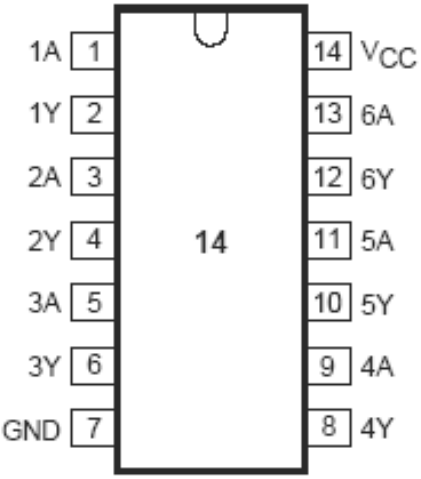

AN8785SB, motor driver, SMD

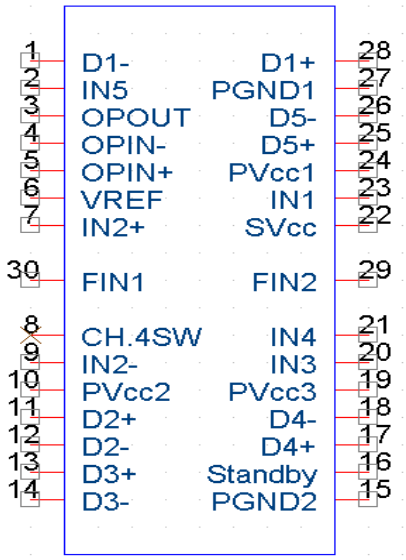

AM29LV160DB-90EC, flash, SMD

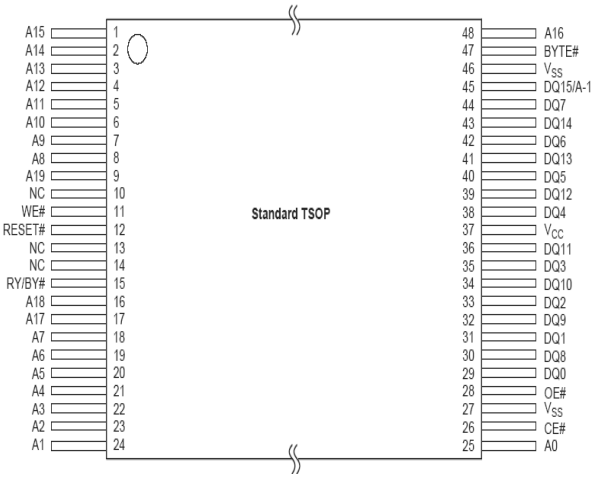

MBM29LV160BE-70P, flash, SMD

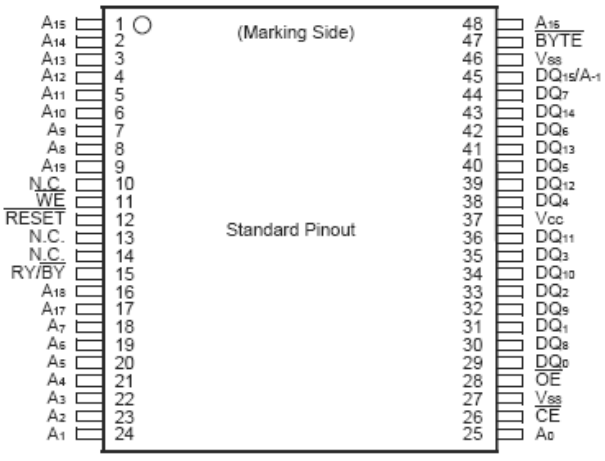

AML3390DTS, decoder, SMD

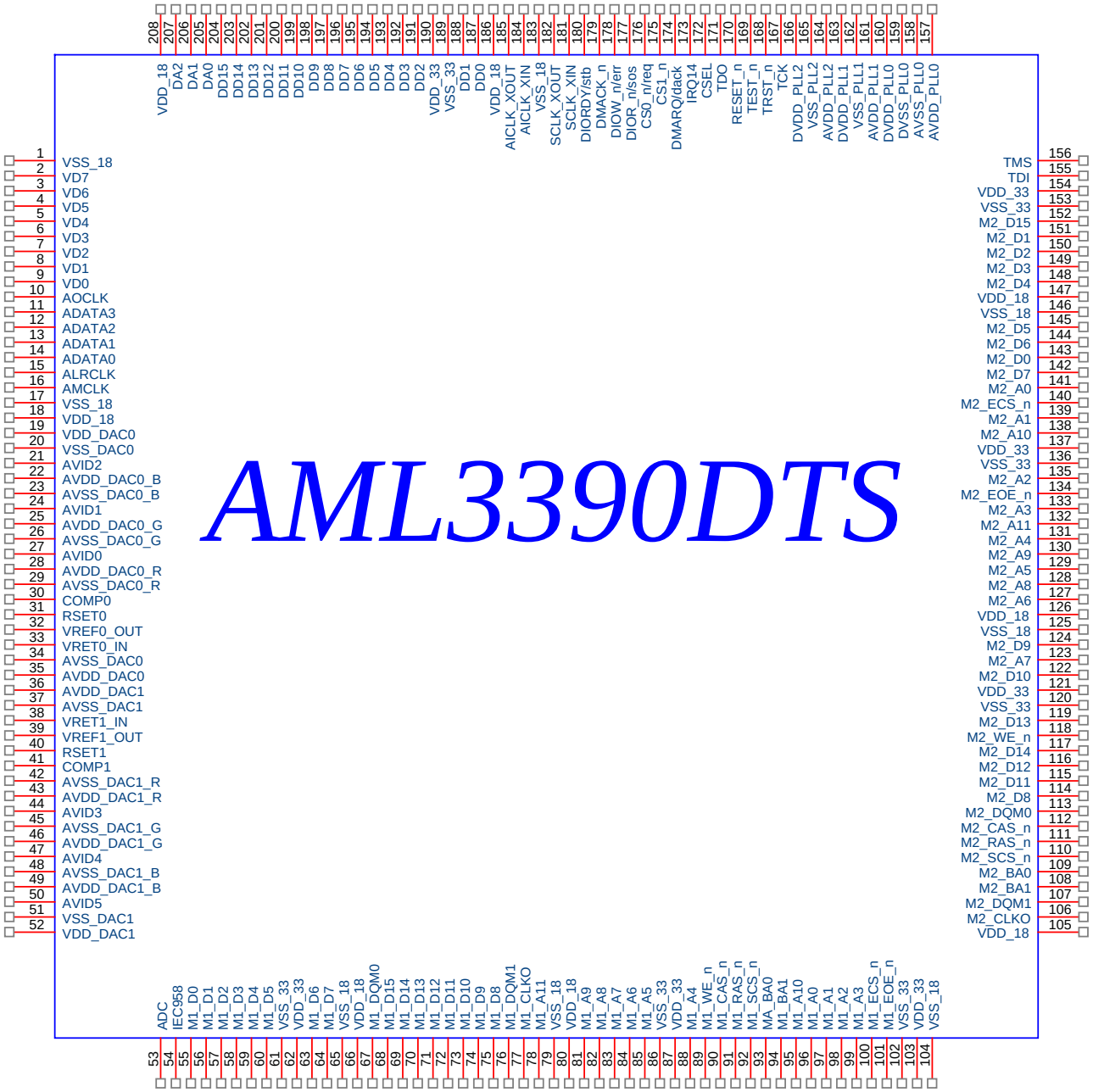

AT24C64, EEPROM, SMD

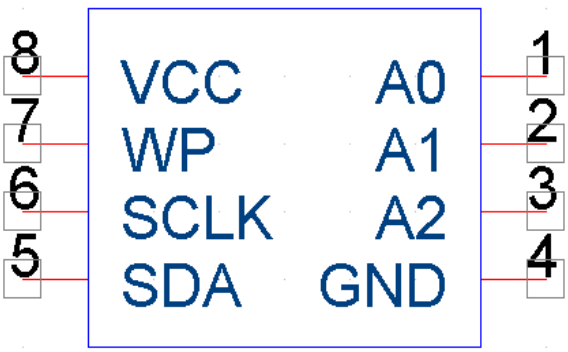

OPA2134, pre-amp, SMD

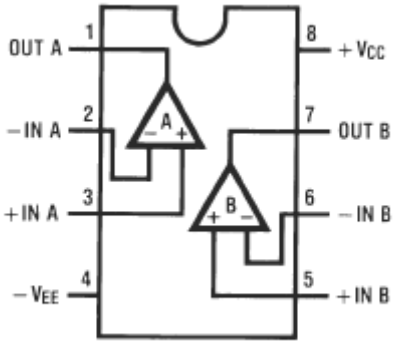

78L05, Voltage Regulator, TO-92

1. Output 2. GND 3. Input

78L12, Voltage Regulator, TO-92

1. Output 2. GND 3. Input

79L05, Voltage Regulator, TO-92

1.GND 2.Input 3.Output

MCR100-6, Silicon controlled rectifiers, TO-92

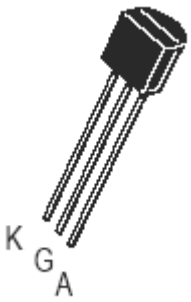

2N5551, NPN, TO-92

8550, PNP, TO-92

8050, NPN, TO-92

9014, NPN, TO-92

PC817, Photoelectric Coupler, DIP

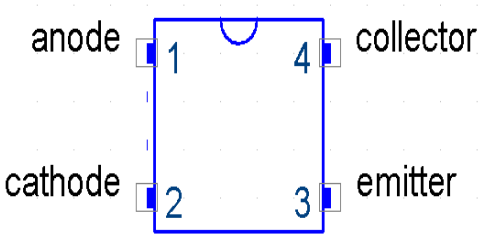

KA431, Precision Adjustable Voltage Regulator, TO-92

1. Ref 2. Anode 3. Cathode

MN103S47JRB, servo, SMD

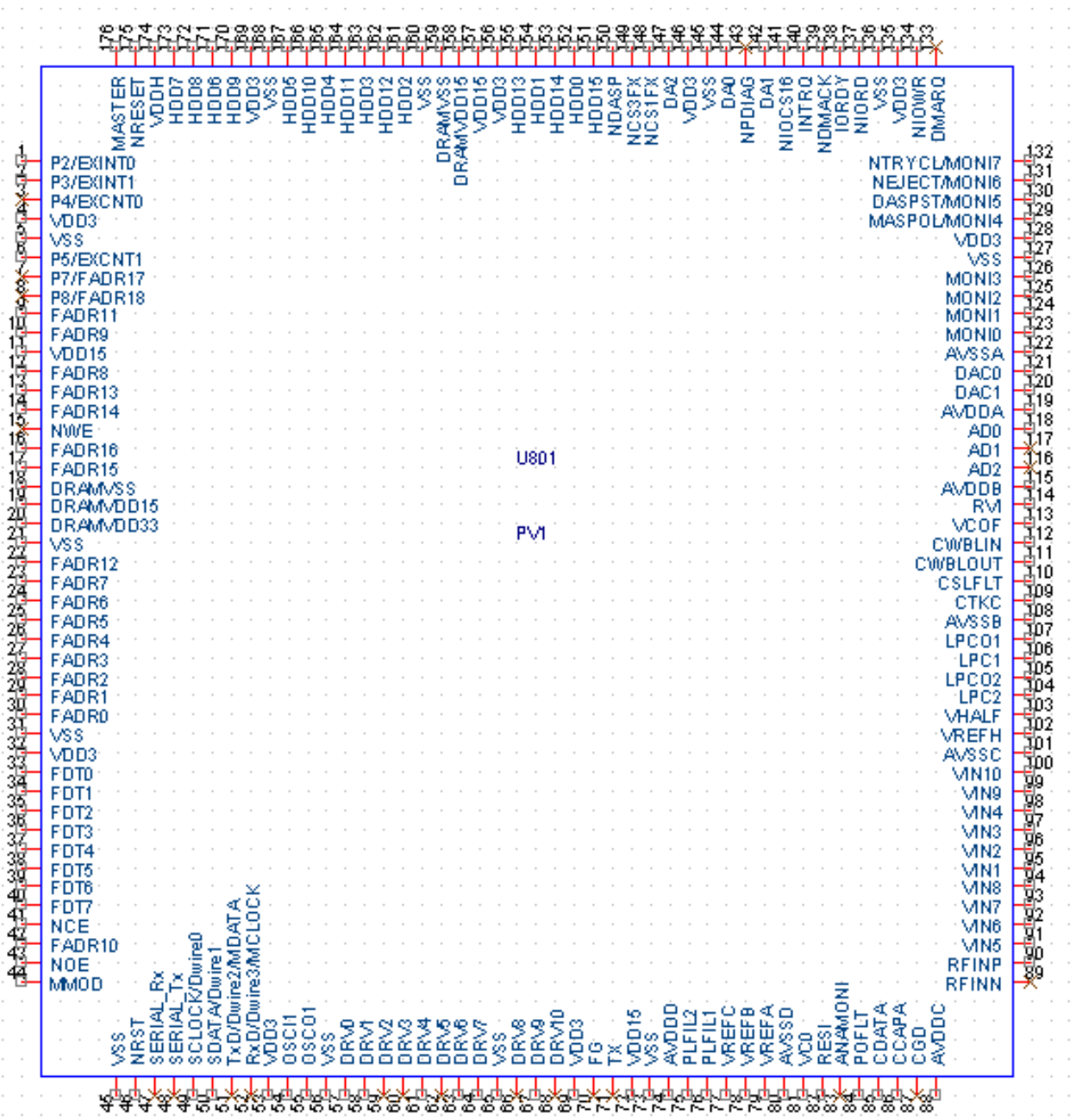

O18EZ01, Voltage Regulator, SMD

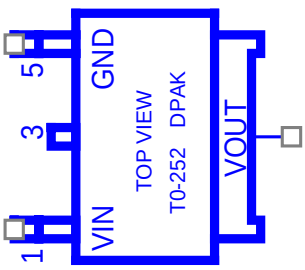

SHARP 018EZ01

WM8728, Audio DAC, SMD

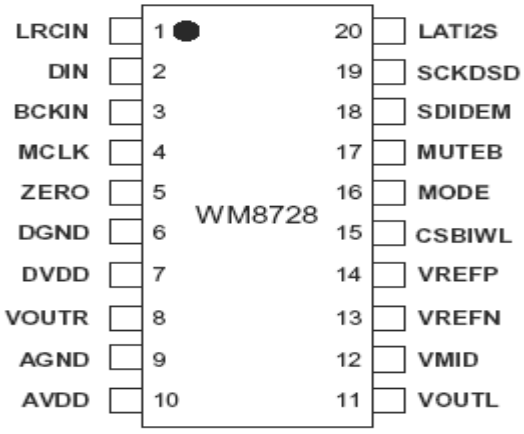

BH7862FS, Video Buffer, SMD

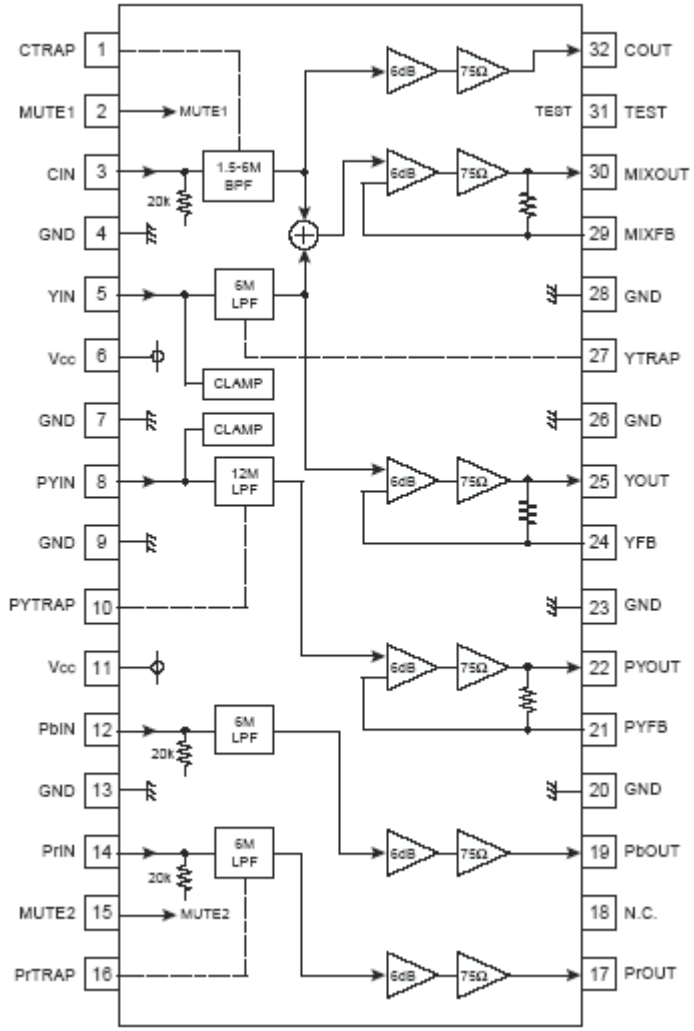

LC75710NE, VFD driver, SMD

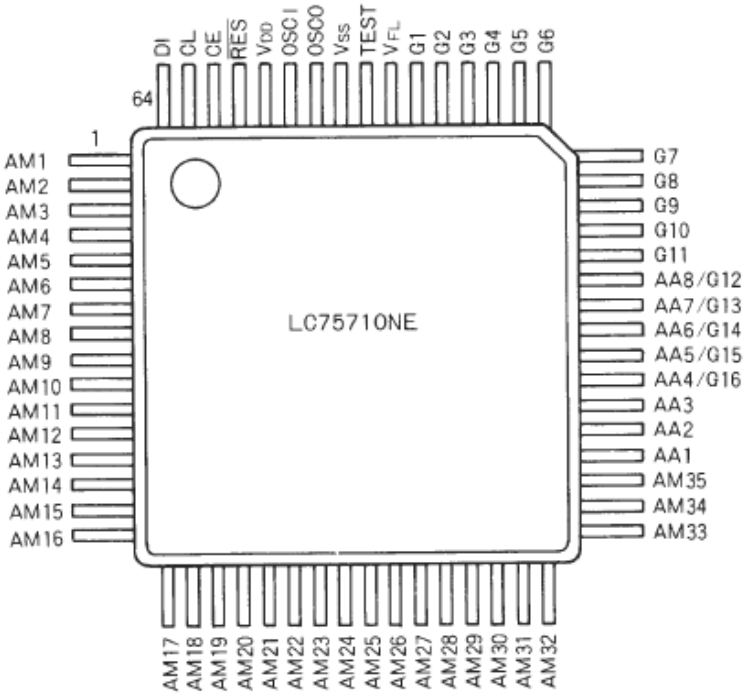

74HC164, SMD

8-bit serial-in/ parallel-out shift register

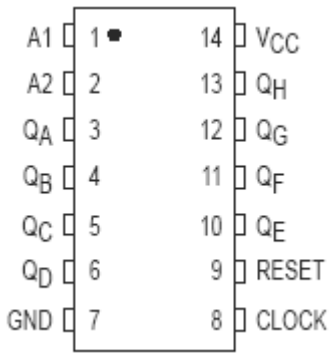

LM9022, SMD

Vacuum Fluorescent Display Filament Driver

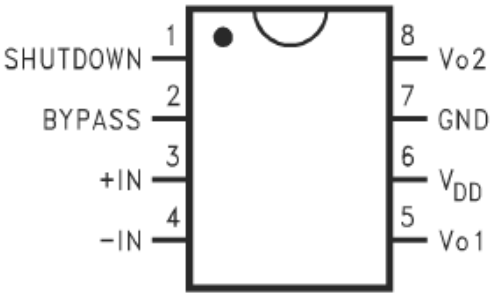

PIC16C56A, MCU, DIP

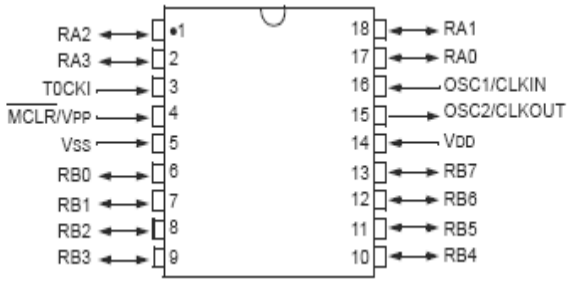

L7809, Voltage Regulator, TO-220

1. Input 2. GND 3. Output

LM7805, Voltage Regulator, TO-220

1. Input 2. GND 3. Output

BA033T, Voltage Regulator, TO-220

1. Input 2. GND 3. Output

BA05T, Voltage Regulator, TO-220

1. Input 2. GND 3. Output

L7812 or LM7812, Voltage Regulator, TO-220

1. Input 2. GND 3. Output

L7912 or LM7912, Voltage Regulator, TO-220

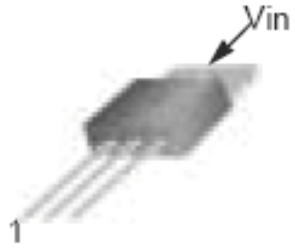

1. GND 2. Input 3. Output

KA5L0380R, Power Switch, In-line Package

1. GND 2. Drain
3. Vcc 4. FB

BU1924, RDS decoder, SMD

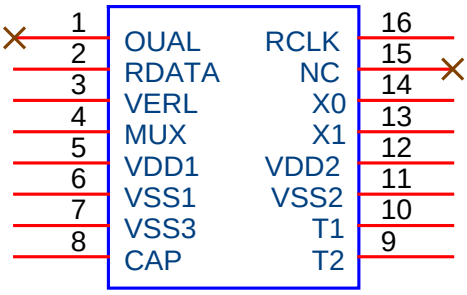

BU1924F

HY57V641620HG, SDRAM, SMD

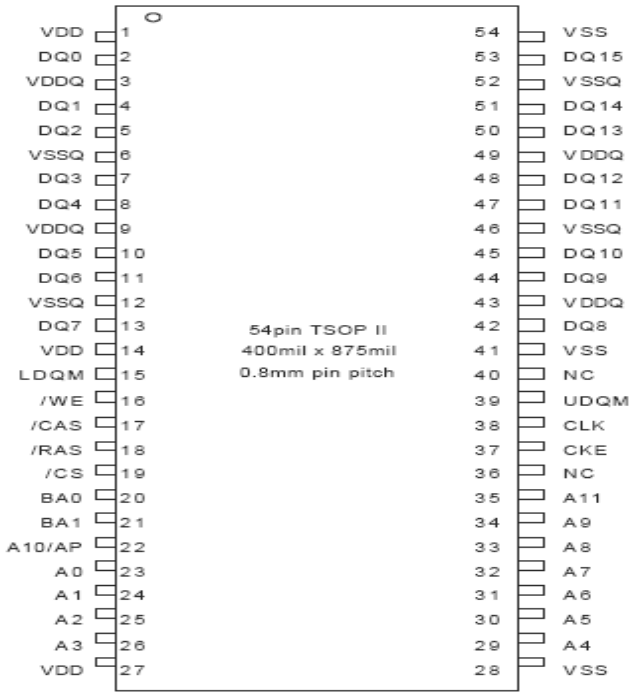

DDX2100, Power Device, SMD

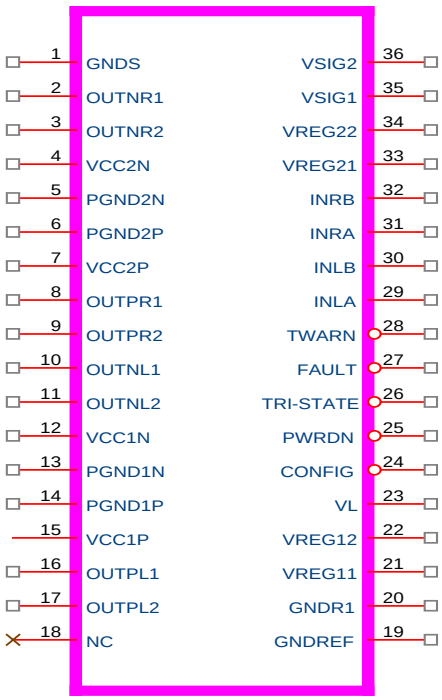

DDX2100

LM4880, Audio Power Amplifier, SMD

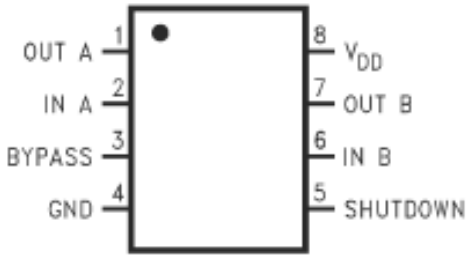

CD4052, Analog Multiplexer, SMD

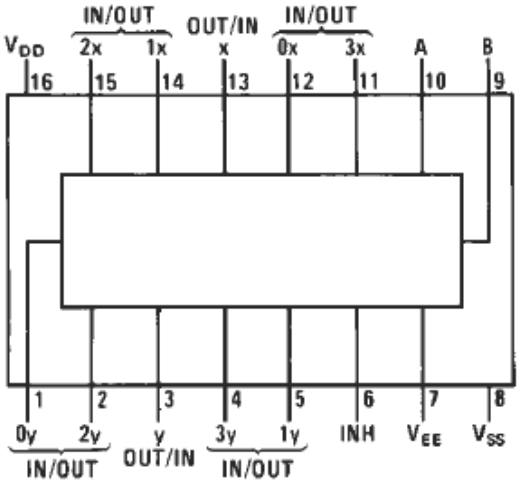

DDX8001, Digital Audio Processor, SMD

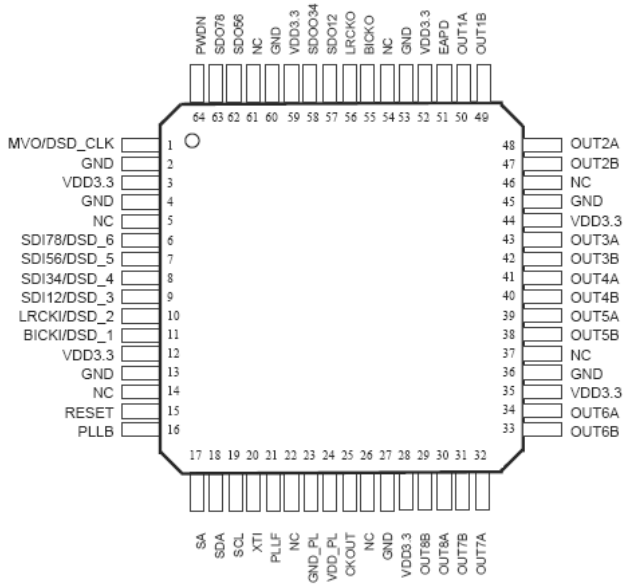

AAT3522IGY-3.08, Microprocessor Reset Circuit, SMD

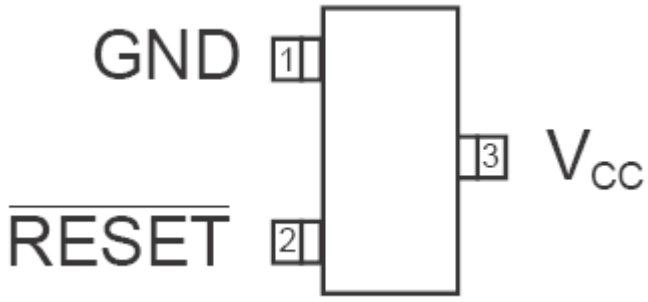

RT9161/A-33, Voltage Regulator, SMD

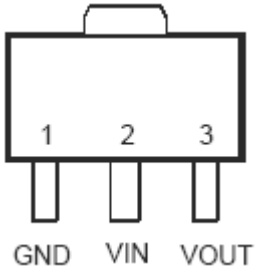

74HC158, data selectors, SMD

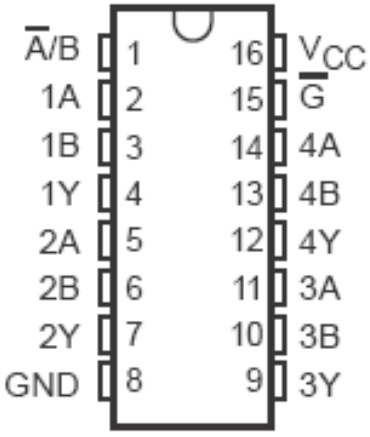

CS5333, A/D Converter, SMD

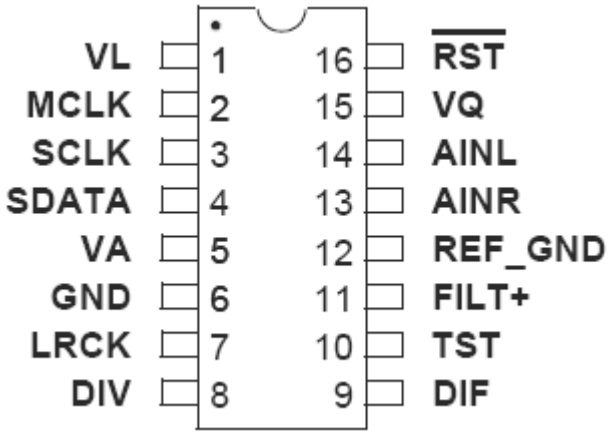

KBU8M, Bridge Rectifiers, In-line Package

FCH20A20, Schottky diode, In-line Package

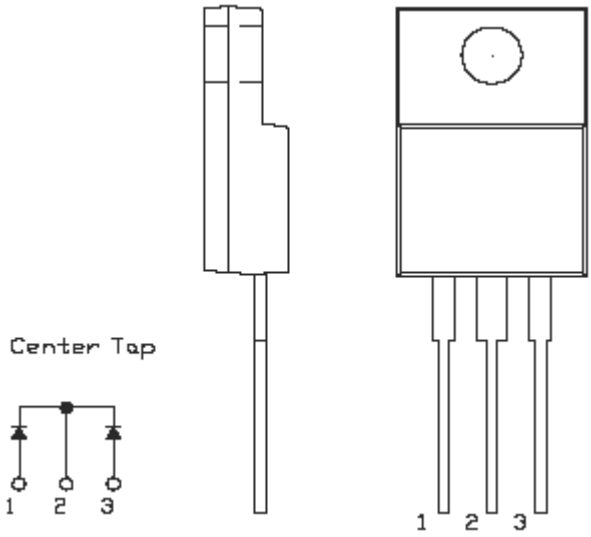

FQA11N90, MOS-FET, In-line Package

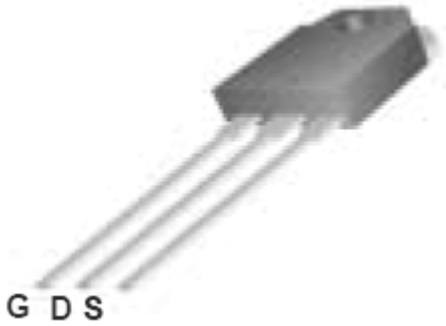

FAN7554, Versatile PWM Controller, DIP

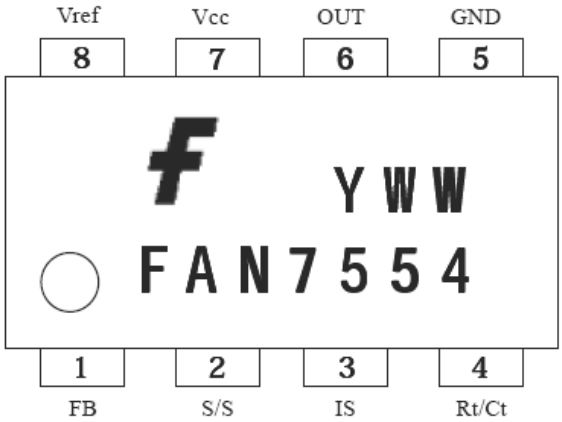

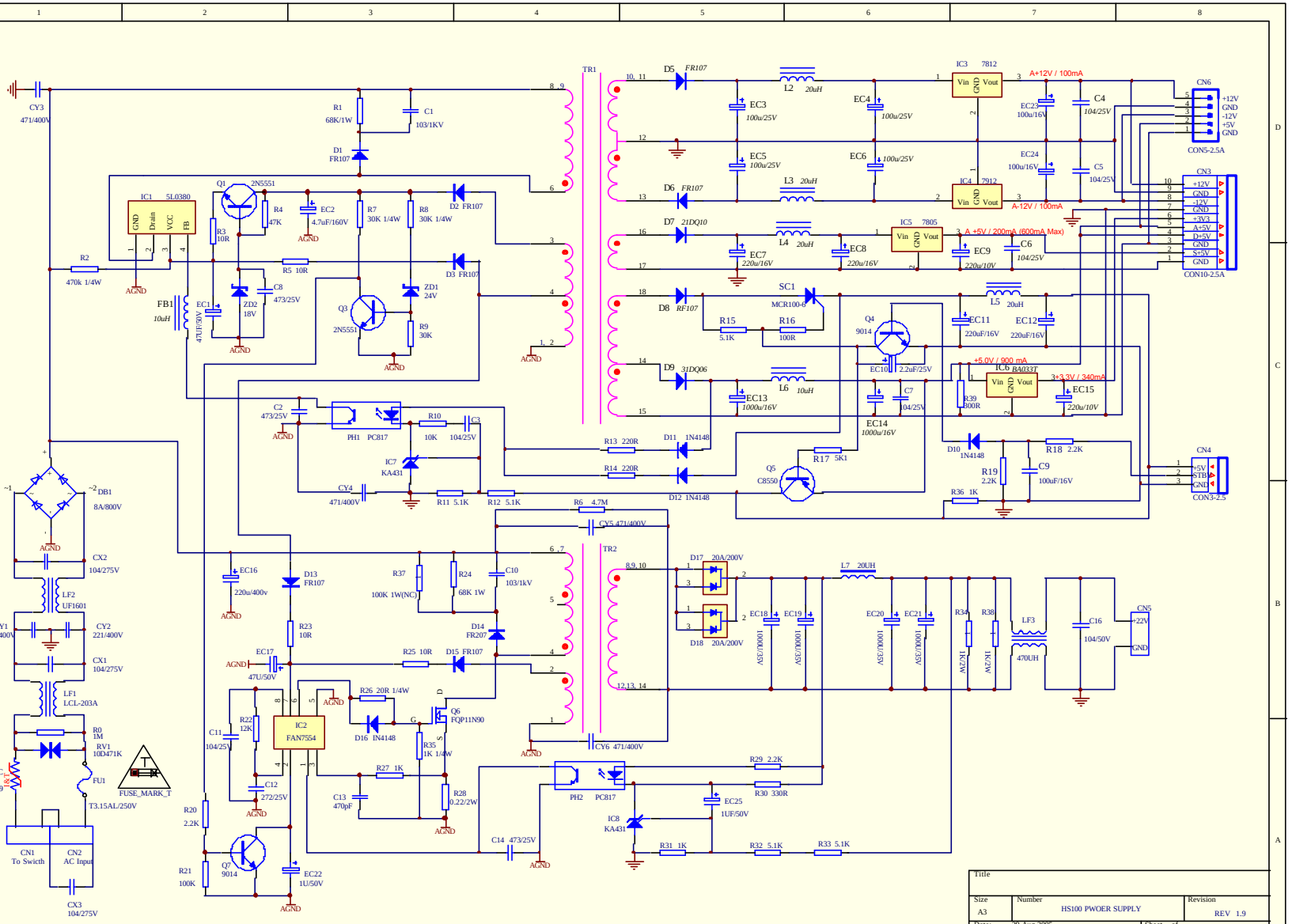
CY3 471/400V
R1 68K/1W
C1 103/1KV
D1 FR107
IC1 5L0380
Q1 2N5551
R4 47K
EC2 4.7uF/160V
R7 30K 1/4W
R8 30K 1/4W
D2 FR107
R3 10R
R5 10R
D3 FR107
R2 470k 1/4W
FB1 10uH
EC1 47UF/50V
ZD2 18V
C8 473/25V
ZD1 24V
Q3 2N5551
R9 30K
TR1
D5 FR107
L2 20uH
EC3 100u/25V
EC4 100u/25V
EC5 100u/25V
EC6 100u/25V
D6 FR107
L3 20uH
D7 21DQ10
L4 20uH
EC7 220u/16V
EC8 220u/16V
D8 RF107
SC1 MCR100-8
D9 31DQ06
L6 10uH
EC13 1000u/16V
EC14 1000u/16V
L5 20uH
EC11 220uF/16V
EC12 220uF/16V
R15 5.1K
R16 100R
Q4 9014
EC10 2.2uF/25V
R17 5K1
Q5 C8550
IC3 7812
IC4 7912
IC5 7805
IC6 BA033T
A+12V / 100mA
A-12V / 100mA
A +5V / 200mA (600mA Max)
+5.0V / 900 mA
3+3.3V / 340mA
EC22 100u/16V
EC24 100u/16V
C4 104/25V
C5 104/25V
C6 104/25V
EC9 220u/10V
EC15 220u/10V
C7 104/25V
R39 100R
R36 1K
D10 1N4148
R18 2.2K
R19 2.2K
C9 100uF/16V
CN6 +12V GND -12V +5V GND
CON5-2.5A
CN3 +12V GND -12V GND +3V3 A+5V D+5V GND S+5V GND
CON10-2.5A
CN4 +5V STB GND
CON3-2.5
C2 473/25V
PH1 PC817
R10 10K
C3 104/25V
IC7 KA431
CY4 471/400V
R11 5.1K
R12 5.1K
R13 220R
R14 220R
D11 1N4148
D12 1N4148
R6 4.7M
CY5 471/400V
TR2
D17 20A/200V
D18 20A/200V
L7 20UH
EC18 1000U/35V
EC19 1000U/35V
EC20 1000U/35V
EC21 1000U/35V
R34 NC/2W
R38 NC/2W
LF3 470UH
C16 104/50V
CN5 +22V GND
CY6 471/400V
DB1 8A/800V
CX2 104/275V
LF2 UF1601
CY1 221/400V
CY2 221/400V
CX1 104/275V
LF1 LCL-203A
R0 1M
RV1 10D471K
NTC 5D-9
FU1 T3.15AL/250V
FUSE_MARK_T
CN1 To Swicth
CN2 AC Input
CX3 104/275V
EC16 220u/400v
D13 FR107
R37 100K 1W(NC)
R24 68K 1W
C10 103/1KV
R23 10R
D14 FR207
EC17 47U/50V
R25 10R
D15 FR107
R26 20R 1/4W
D16 IN4148
Q6 FQP11N90
R35 1K 1/4W
IC2 FAN7554
R22 12K
C11 104/25V
C12 272/25V
R27 1K
C13 470pF
R28 0.22/2W
R20 2.2K
R21 100K
Q7 9014
EC22 1U/50V
PH2 PC817
R29 2.2K
R30 330R
EC25 1UF/50V
IC8 KA431
R31 1K
R32 5.1K
R33 5.1K
C14 473/25V
AGND
Title
Size A3
Number HS100 PWOER SUPPLY
Revision REV 1.9
Date: 29-Aug-2005
File: F:\HS100.ddb
Sheet of
Drawn By: Yicong Huang

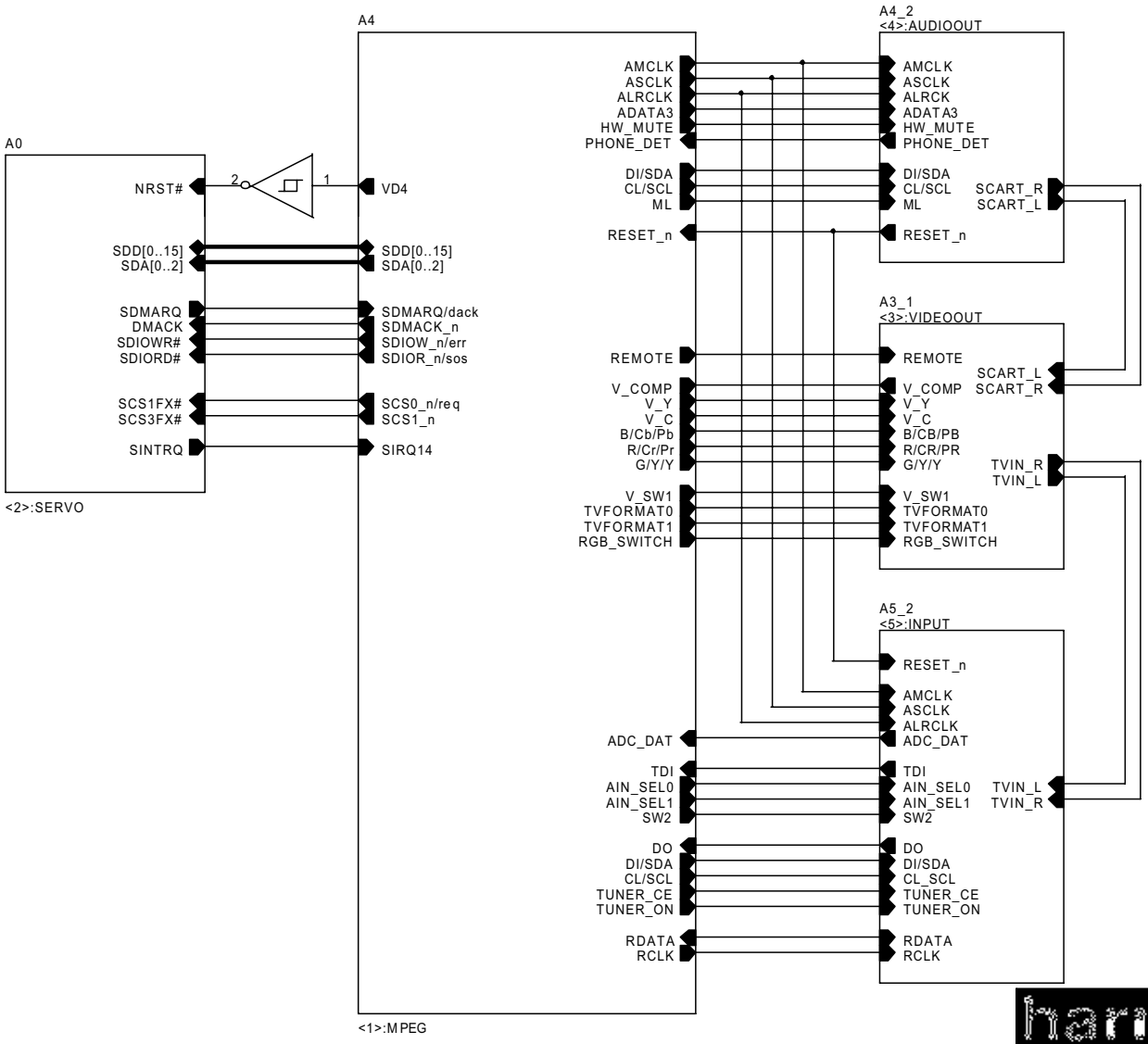

harman kardon

Harman Kardon, Northridge, California 91329, USA

Title	HS100 MAIN BOARD	050725	
Size A4	Document Number 1239C-PV1		Rev 3.43
Date: Tuesday, November 22, 2005	Sheet 2 of 24		

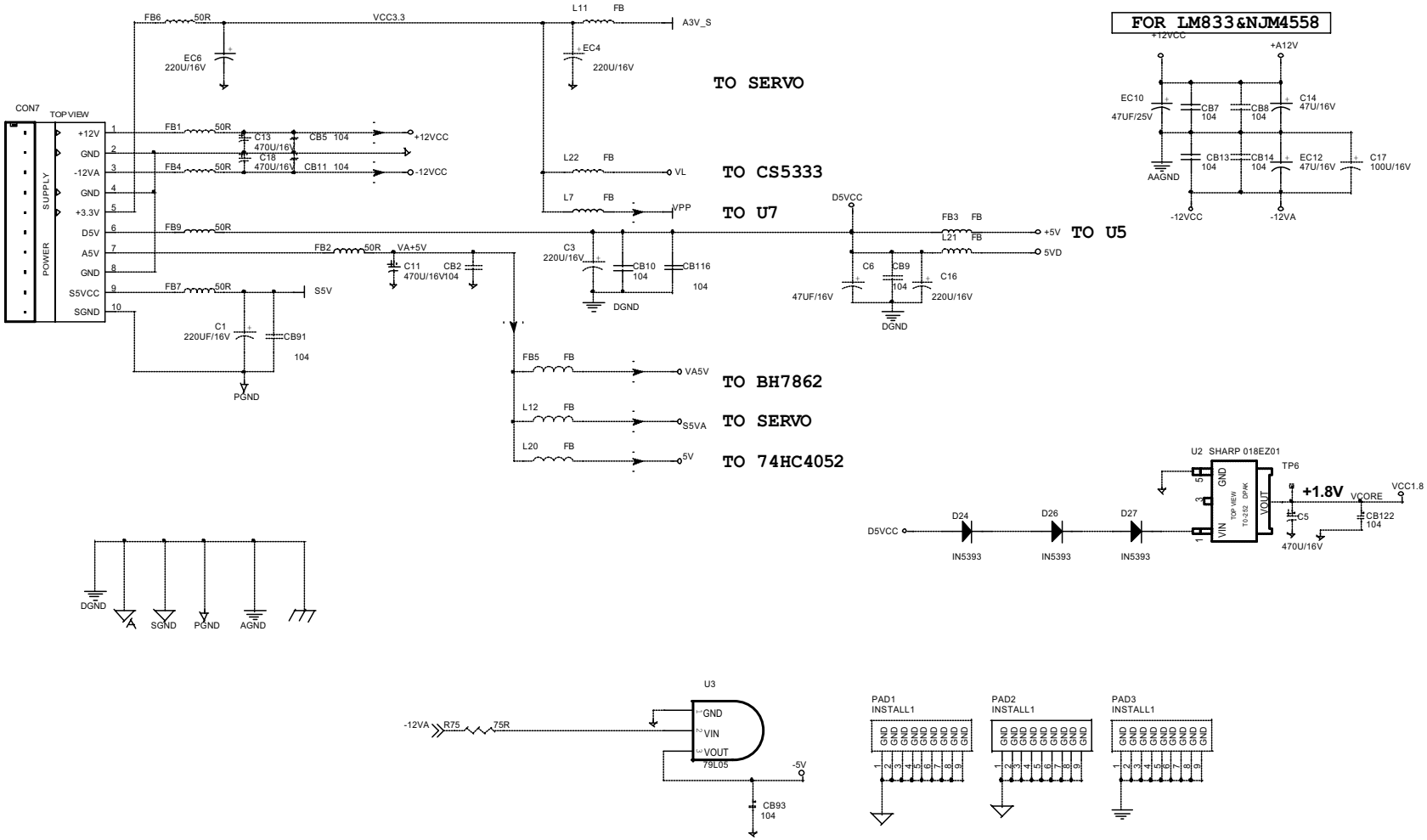

harman kardon

Harman Kardon, Northridge, California 91329, USA

Title		
HS100 MAIN BOARD		050725
Size A3	Document Number 1239C-PV1	Rev 3.43
Date: Tuesday, November 22, 2005	Sheet 3 of 24	

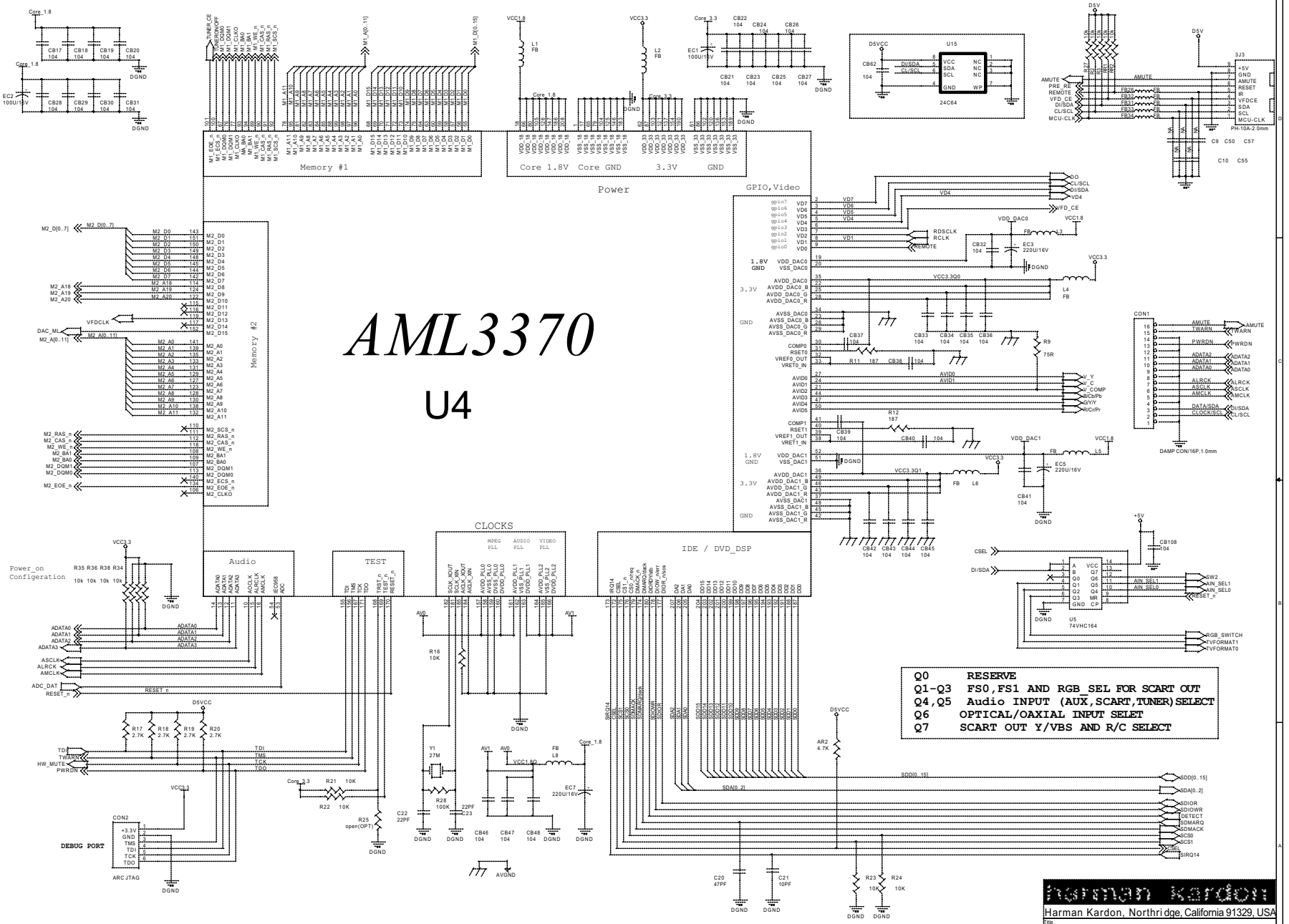
AML3370
U4
Memory #1
Memory #2
Power
GPIO,Video
CLOCKS
Audio
TEST
IDE / DVD_DSP
Power_on Configeration
DEBUG PORT
ARC JTAG
DAMP CON/16P,1.0mm
Q0 RESERVE
Q1-Q3 FS0,FS1 AND RGB_SEL FOR SCART OUT
Q4,Q5 Audio INPUT (AUX,SCART,TUNER)SELECT
Q6 OPTICAL/OAXIAL INPUT SELET
Q7 SCART OUT Y/VBS AND R/C SELECT
harman kardon
Harman Kardon, Northridge, California 91329, USA
HS100 MAIN BOARD
050725
Document Number
1239C-PV1
Rev
3.43
Tuesday, November 22, 2005
Sheet 4 of 24

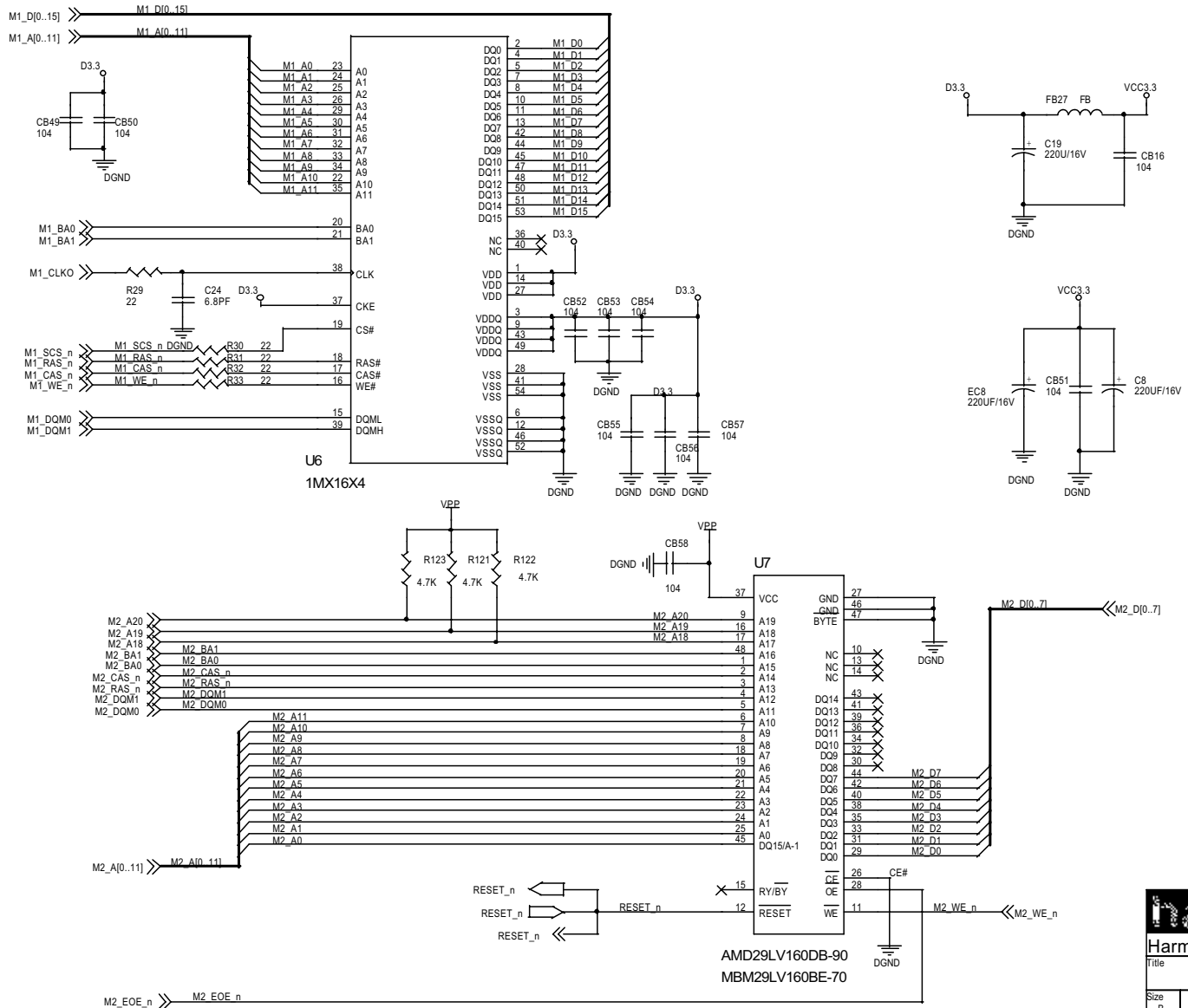

harman kardon

Harman Kardon, Northridge, California 91329, USA

Title	HS100 MAIN BOARD	050725
Size B	Document Number 1239C-PV1	Rev 3.43
Date: Tuesday, November 22, 2005	Sheet 5 of 24	

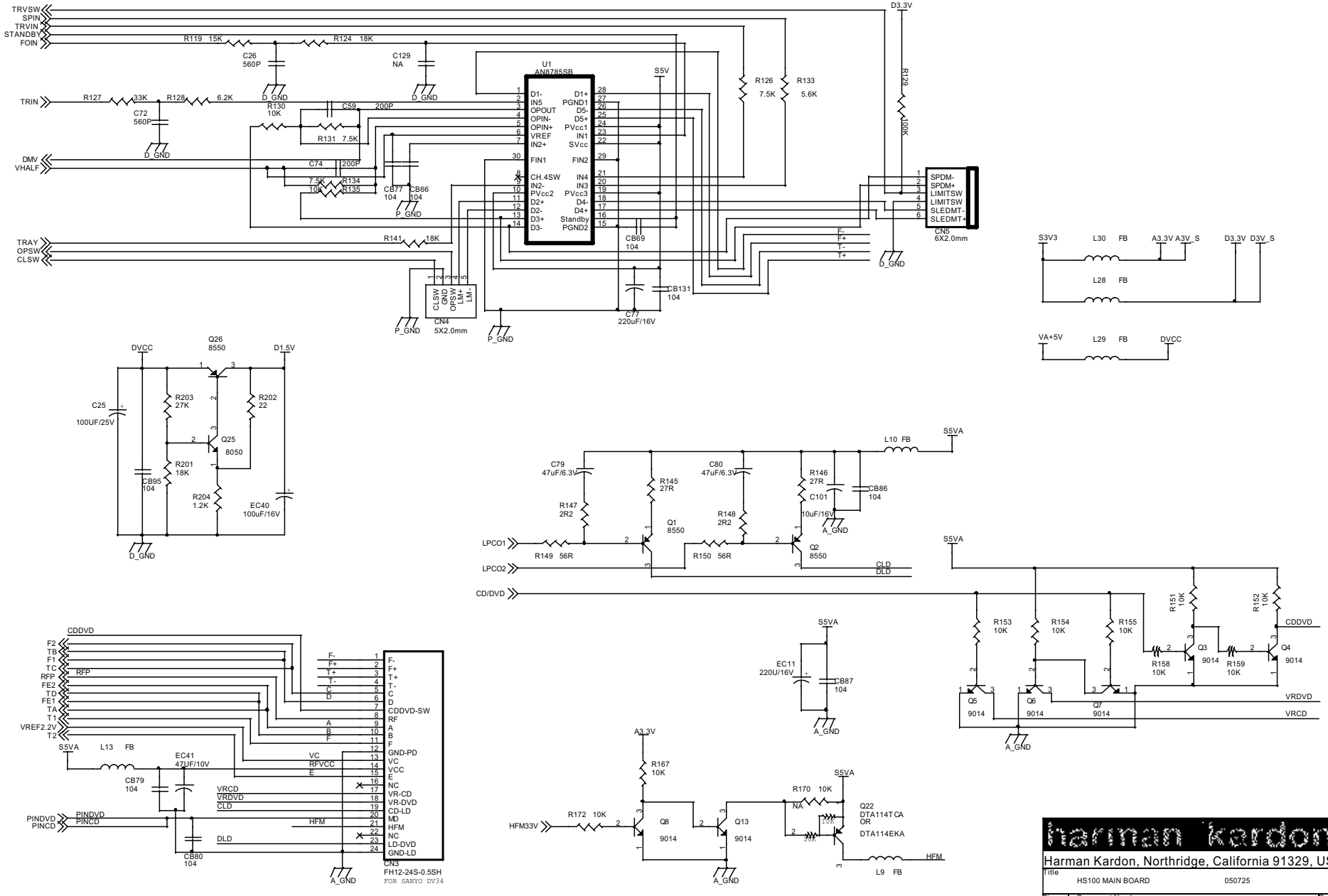

harman kardon

Harman Kardon, Northridge, California 91329, USA

Title		
HS100 MAIN BOARD	050725	
Size A3	Document Number 1239C-PV1	Rev 3.43
Date: Tuesday, November 22, 2005	Sheet 6 of 24	

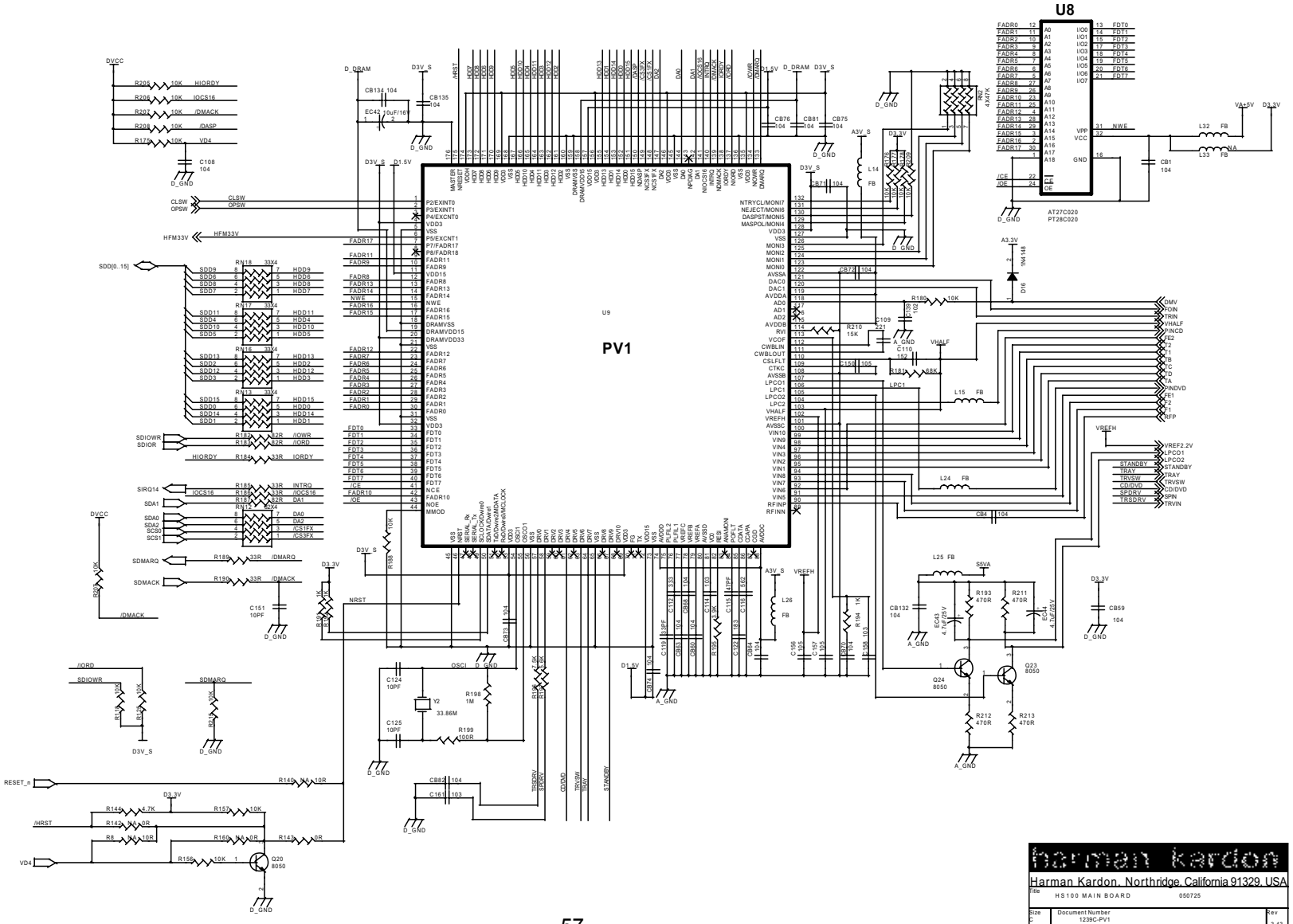
U8
PV1
U9
AT27C020
PT28C020
harman kardon
Harman Kardon, Northridge, California 91329, USA
HS100 MAIN BOARD
050725
Document Number
1239C-PV1
Rev
3.43
Tuesday, November 22, 2005
Sheet 7 of 24

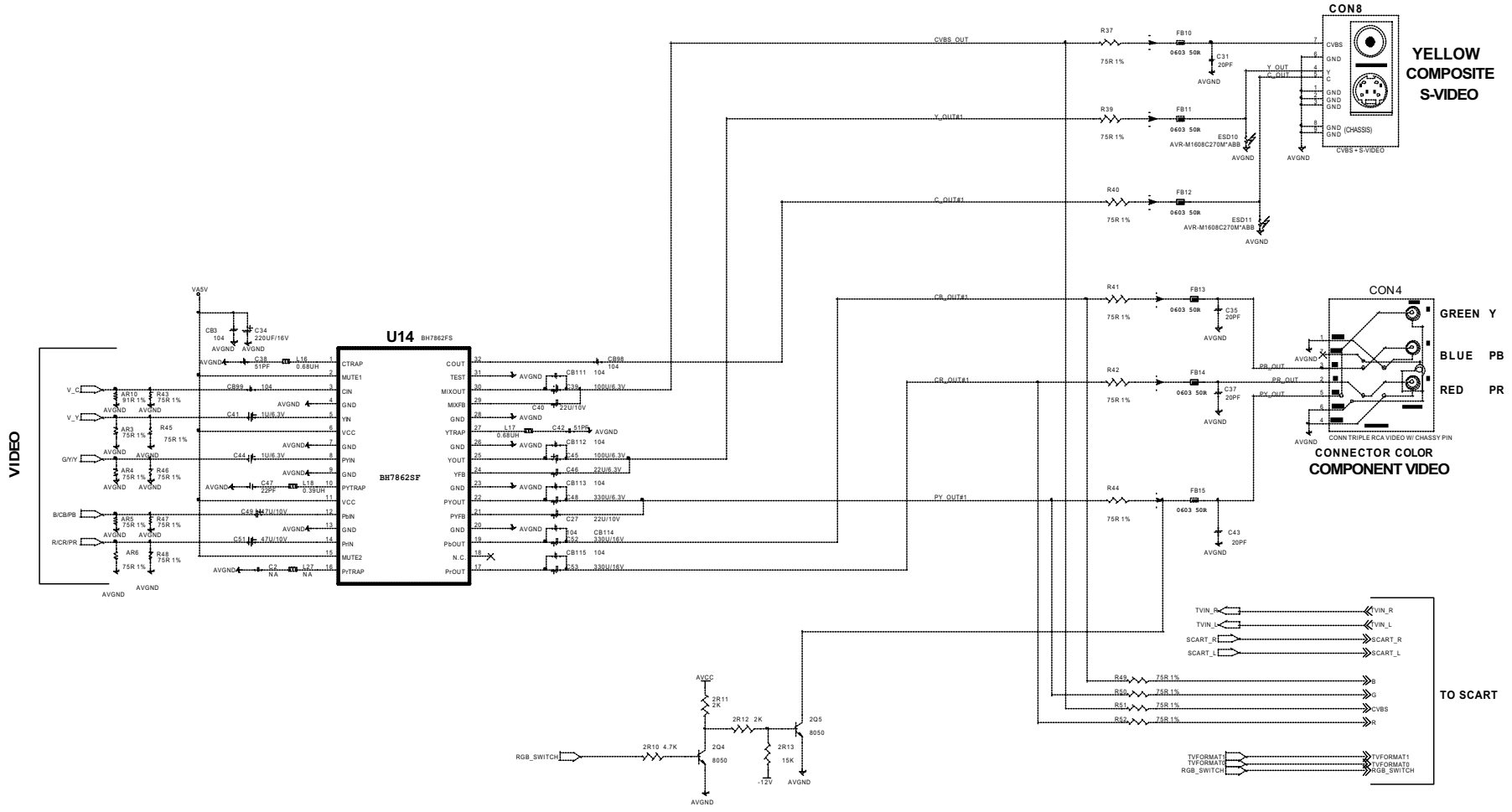

harman kardon
Harman Kardon, Northridge, California 91329, USA
Title: HS100 MAIN BOARD 050725
Size: A2 | Document Number: 1239C-PV1 | Rev: 3.43
Date: Tuesday, November 22, 2005 | Sheet 8 of 24

SCART

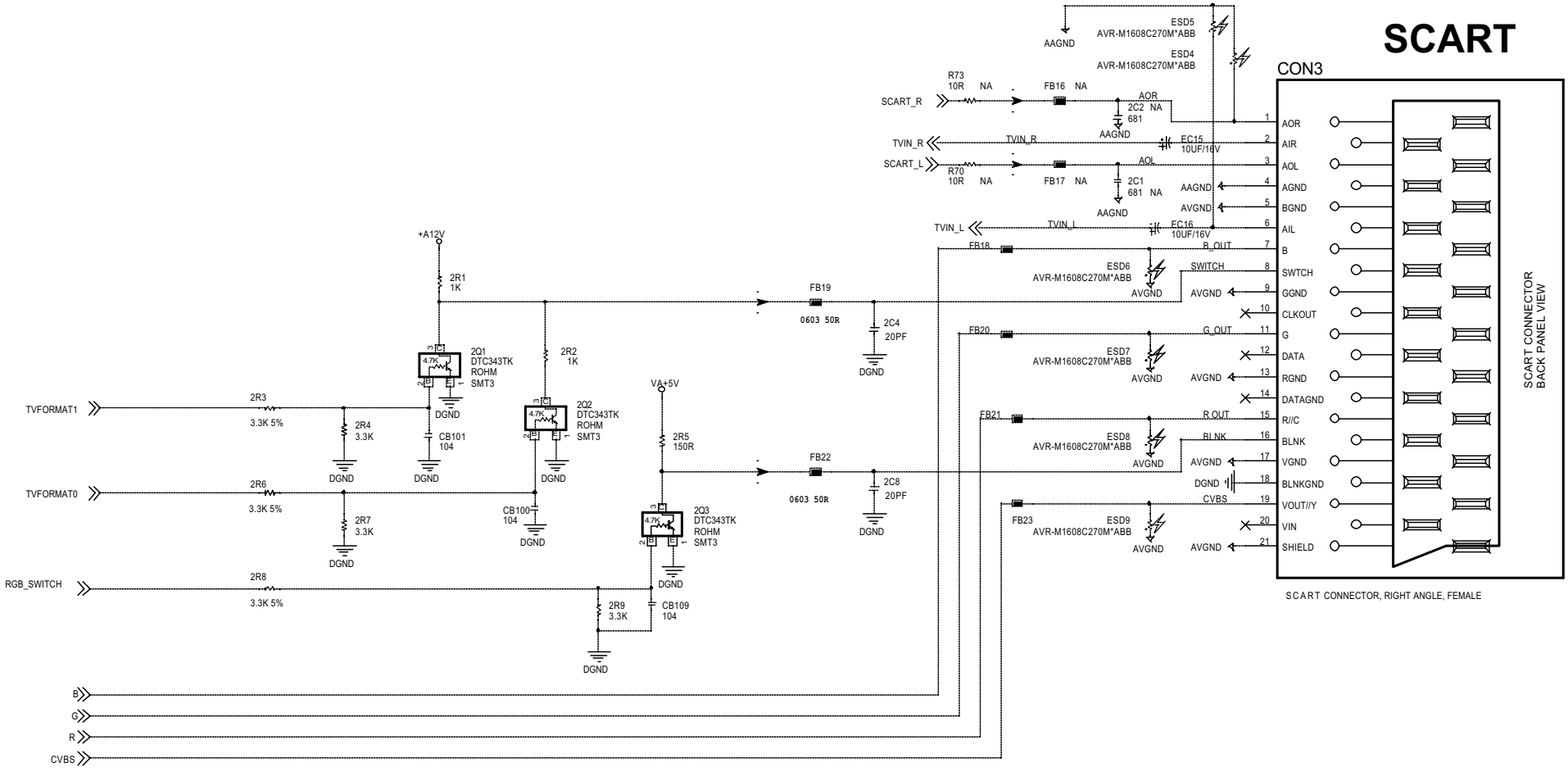

RGBSWITCH	TVFORMAT0	TVFORMAT1	TV FUNCTION	PIN8(V)	PIN16(V)
X	0	1	SCART Inactive (Standby)	0V	X
X	0	0	SCART Active Auto Switch to 4:3 Aspect Ratio	12V	X
X	1	0	SCART Active Auto Switch to 16:9 Aspect Ratio	6V	X
0	X	X	RGB	X	1-3V
1	X	X	CVBS	X	0-0.4V

harman kardon

Harman Kardon, Northridge, California 91329, USA

Title		
HS100 MAIN BOARD	050725	
Size B	Document Number 1239C-PV1	Rev 3.43
Date: Tuesday, November 22, 2005	Sheet 9 of 24	

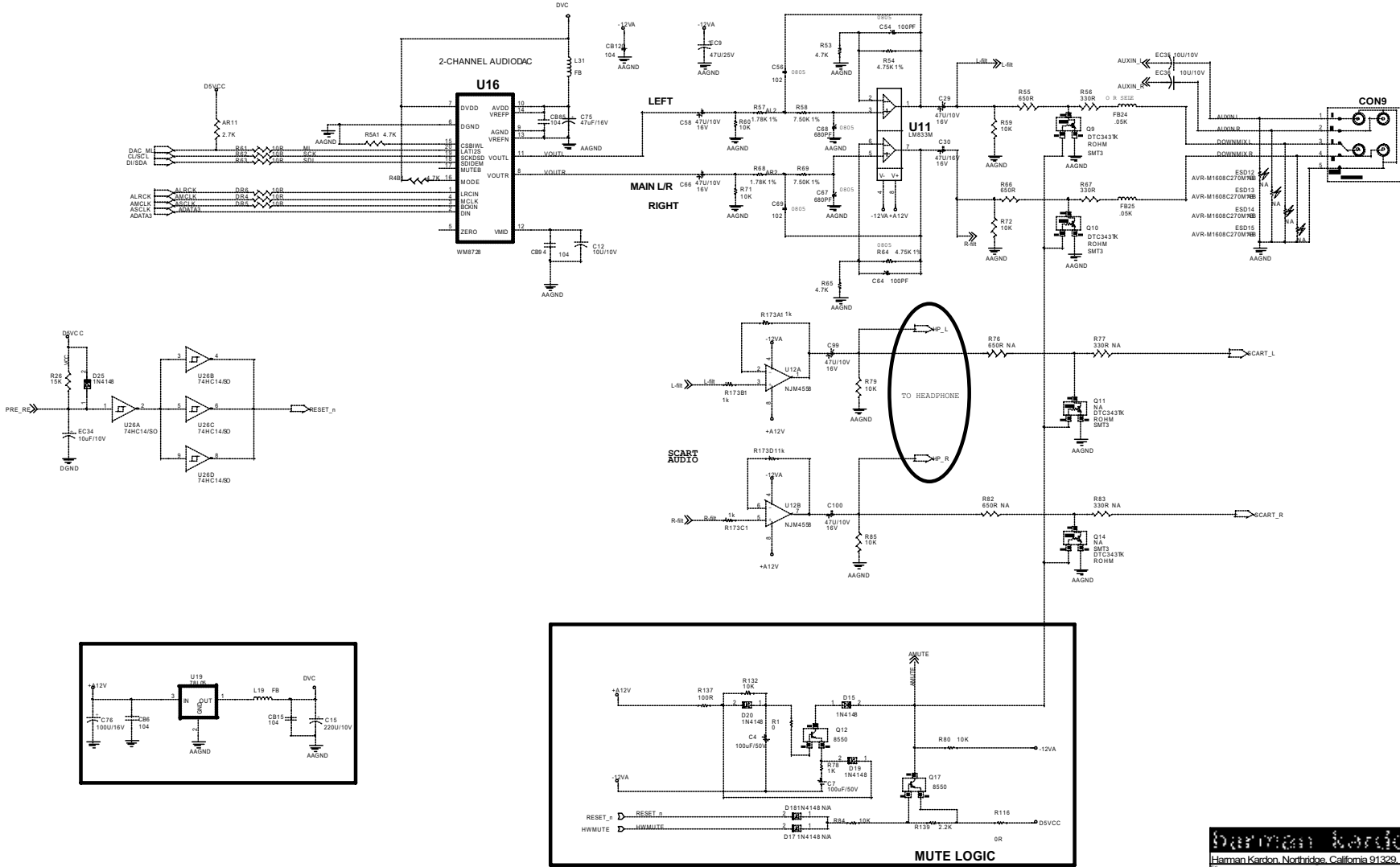

Harman Kardon, Northridge, California 91329, USA

Title: H S100 MAIN BOARD 050725

Size: Custom | Document Number: 1239C-PM | Rev: 3.43

Date: Tuesday, November 22, 2005 | Sheet 10 of 24

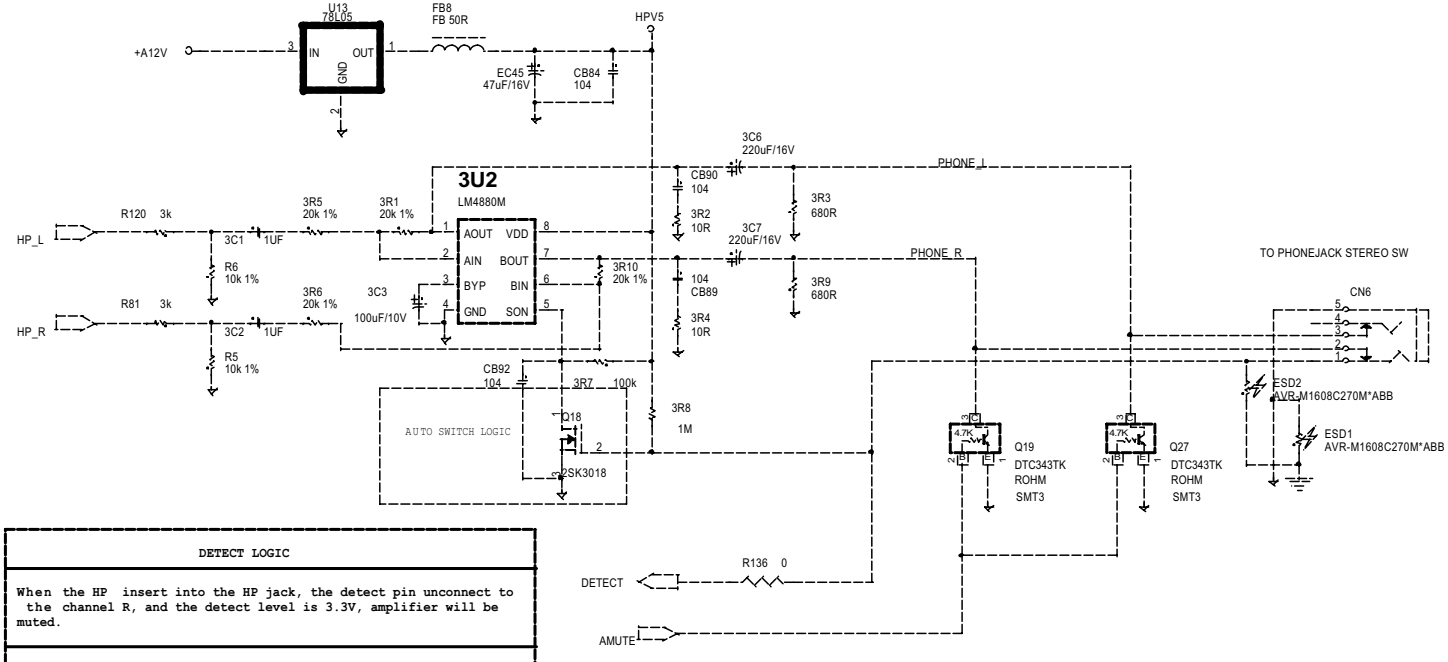

DETECT LOGIC
When the HP insert into the HP jack, the detect pin unconnect to the channel R, and the detect level is 3.3V, amplifier will be muted.
When the HP doesn't insert into the HP jack, the detect pin will connect to the channel R, and the detect level is 0V, amplifier will work normally.

harman kardon

Harman Kardon, Northridge, California 91329, USA

Title		
HS100 MAIN BOARD	050725	
Size: B	Document Number: 1239C-PV1	Rev: 3.43
Date: Tuesday, November 22, 2005	Sheet 11 of 24	

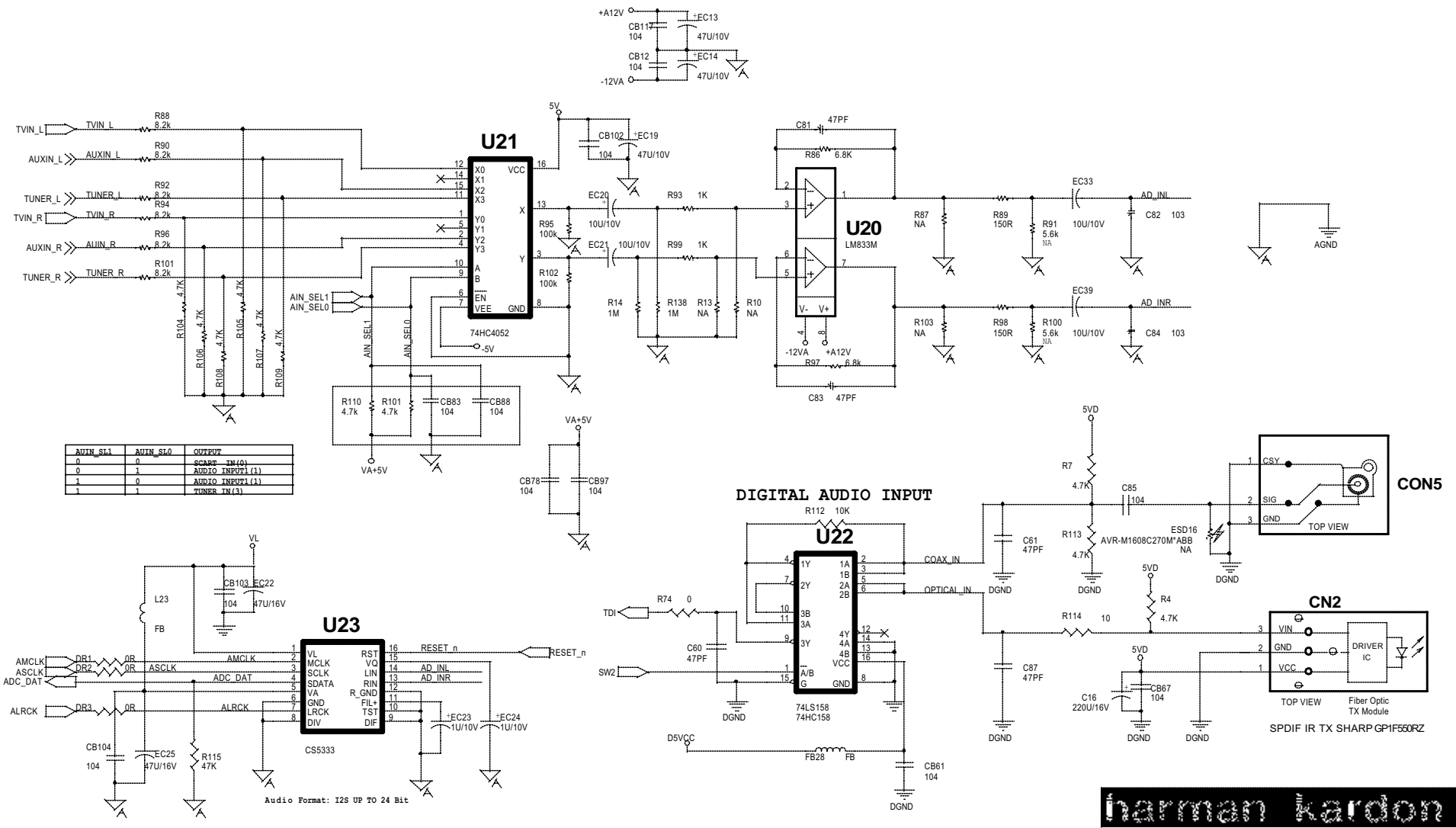
U21
74HC4052
U20
LM833M
U22
74LS158
74HC158
U23
CS5533
DIGITAL AUDIO INPUT
CON5
CN2
SPDIF IR TX SHARP GP1F550RZ
Audio Format: I2S UP TO 24 Bit
AUIN_SL1 AUIN_SL0 OUTPUT
0 0 SCART IN(0)
0 1 AUDIO INPUT1(1)
1 0 AUDIO INPUT1(1)
1 1 TUNER IN(3)

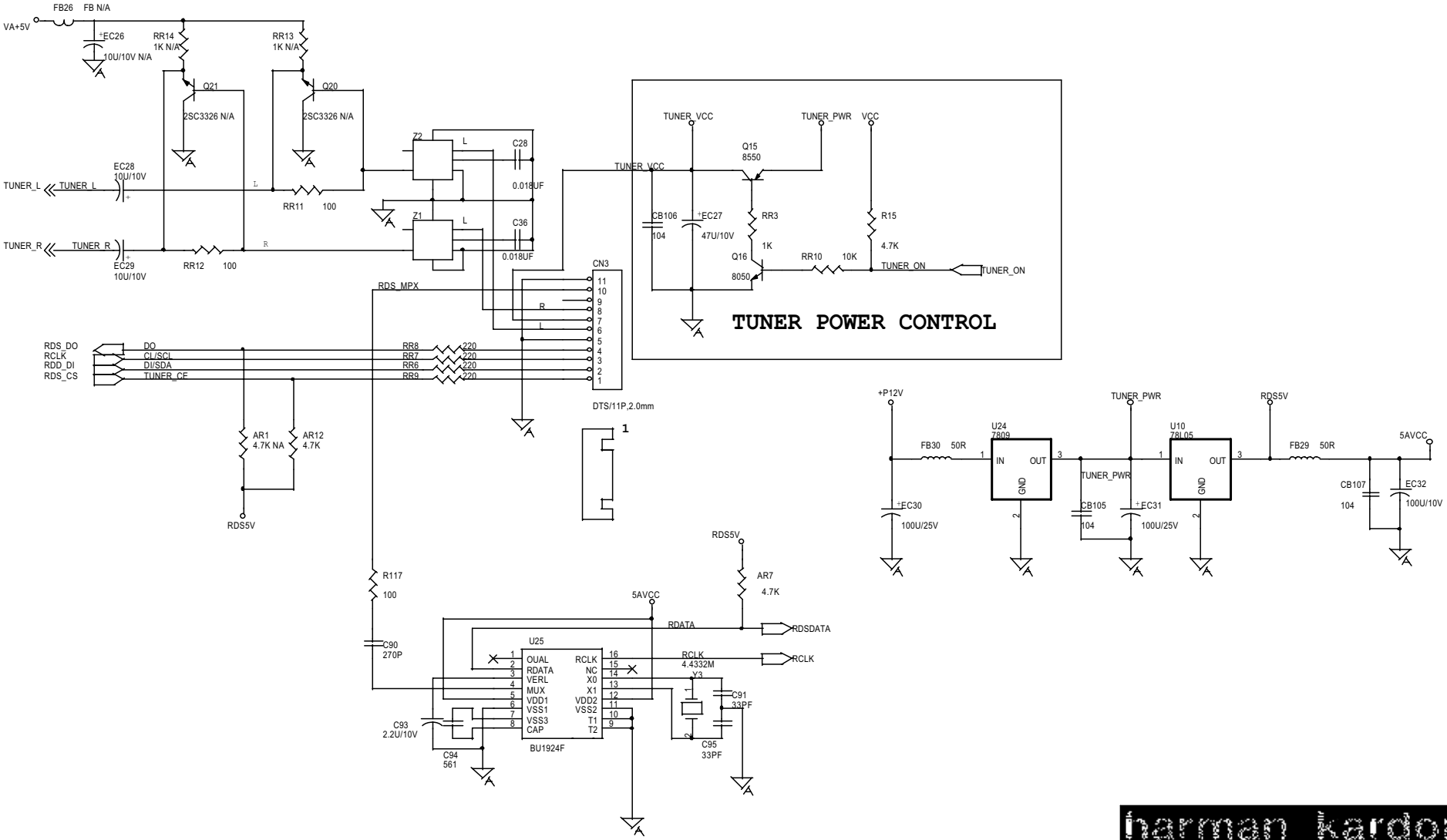

harman kardon

Harman Kardon, Northridge, California 91329, USA

Title		
HS100 MAIN BOARD	050725	
Size B	Document Number 1239C	Rev 3.43
Date: Tuesday, November 22, 2005	Sheet 13 of 24	

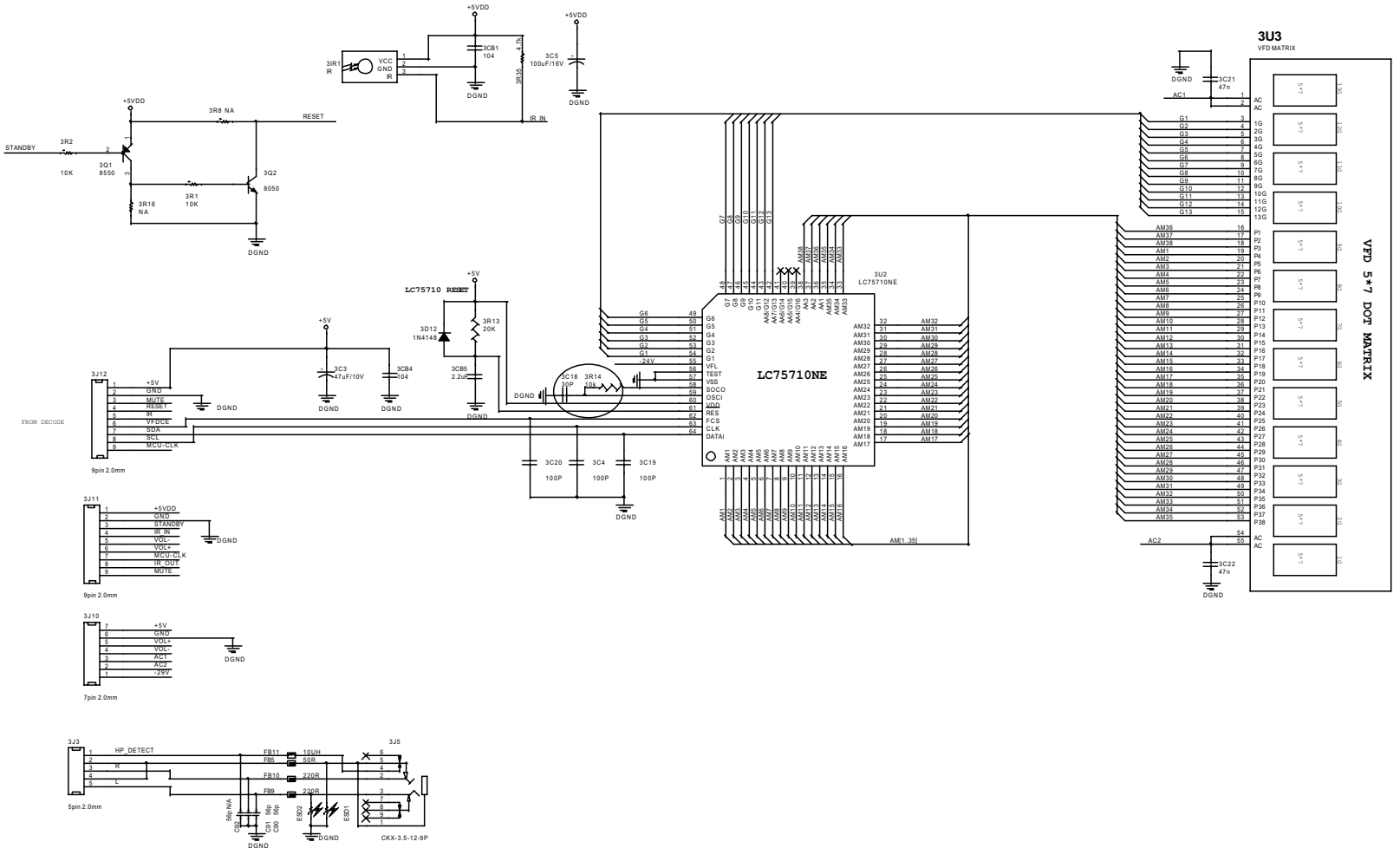

Harman Kardon, Northridge, California 91329, USA

Title	HS100 FRONT PANEL	050927
Size C	Document Number 1813C	Rev 1.3
Date: Tuesday, November 22, 2005	Sheet 14 of 24	

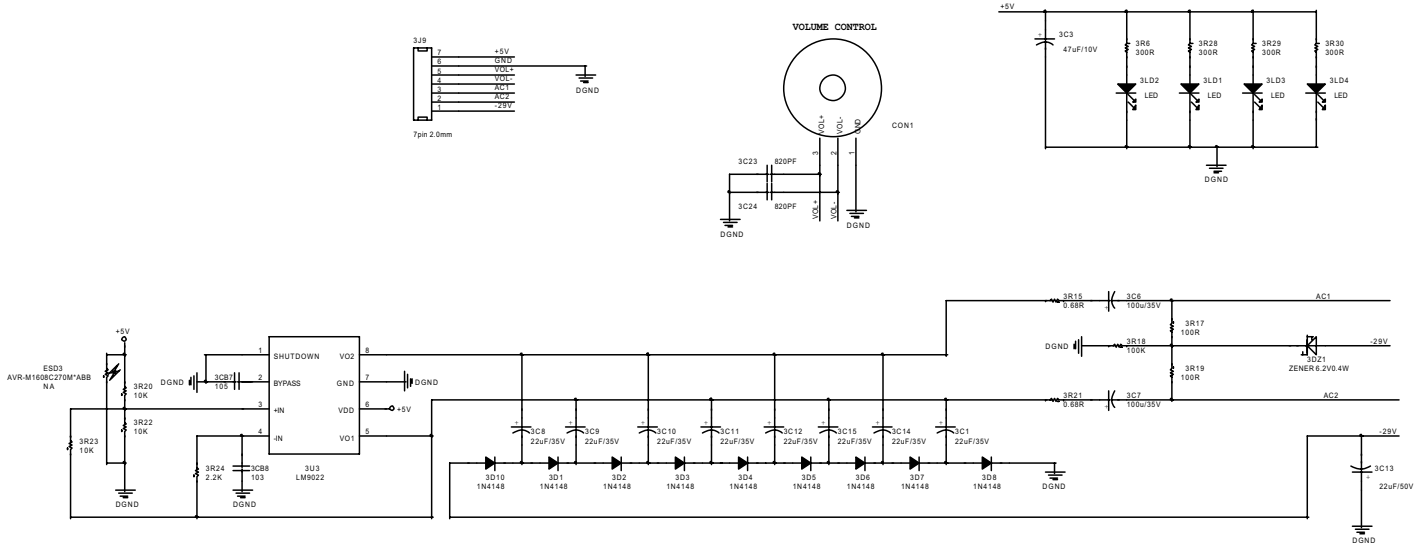

Harman Kardon, Northridge, California 91329, USA

Title: HS100 FRONT PANEL 050920			
Size: C	Document Number: 1814C		Rev: 1.2
Date: Tuesday, November 22, 2005		Sheet 15 of 24	

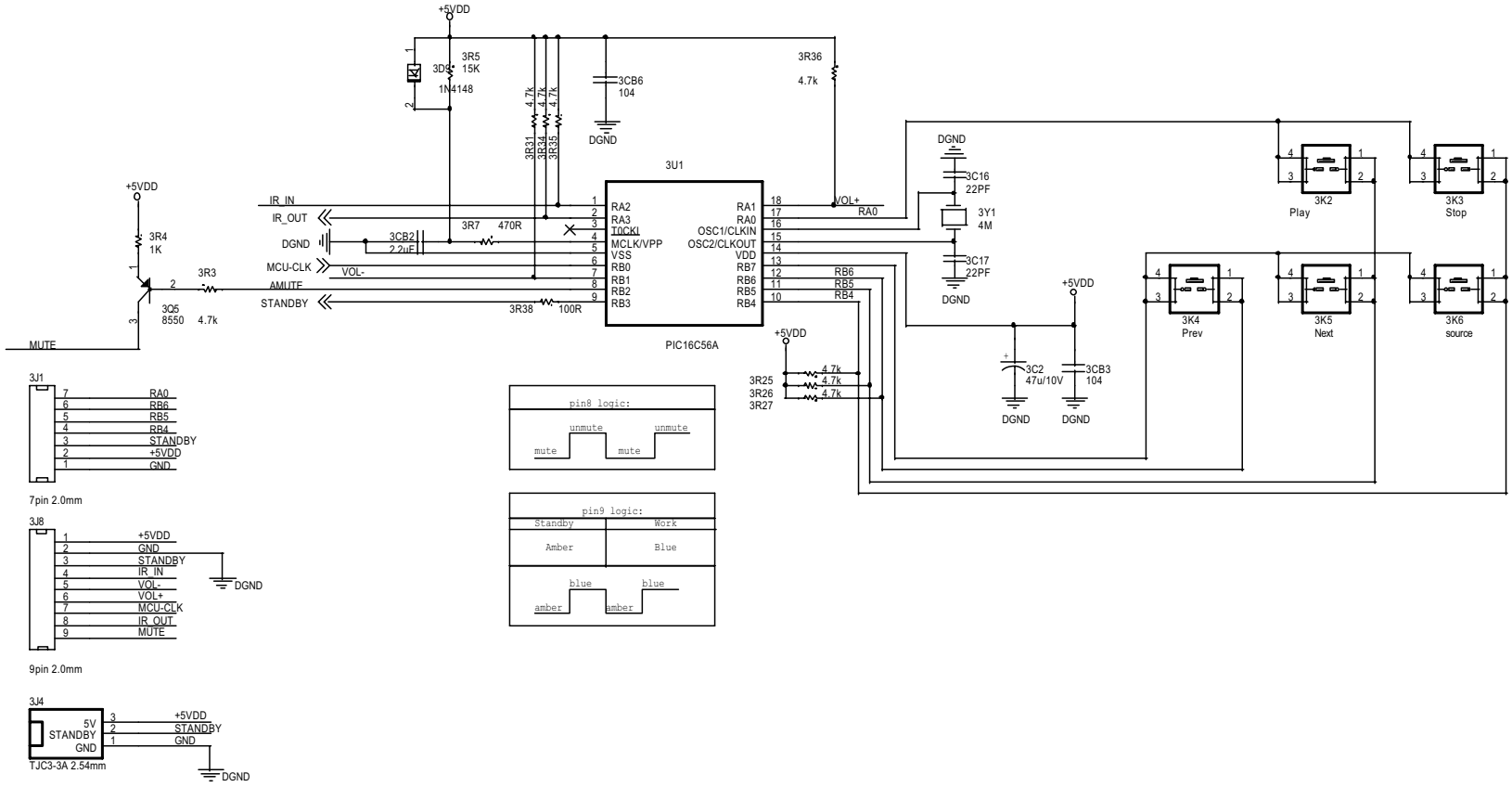

harman kardon

Harman Kardon, Northridge, California 91329, USA

Title		
HS100 FRONT PANEL	050920	
Size: B	Document Number: 1815C	Rev: 1.2
Date: Tuesday, November 22, 2005	Sheet 16 of 24	

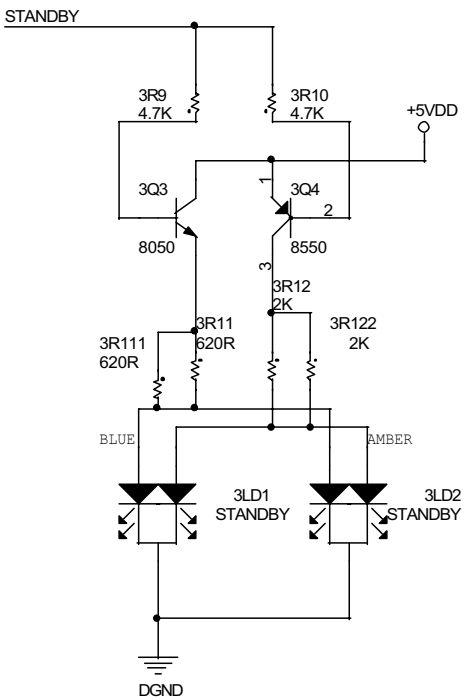

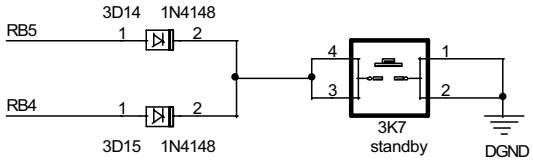

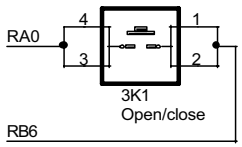

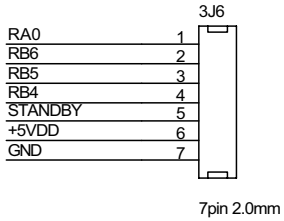

Harman Kardon, Northridge, California 91329, USA

Title	HS100 FRONT PANEL 050920	
Size A	Document Number 1816C	Rev 1.2
Date: Tuesday, November 22, 2005	Sheet 17 of 24	

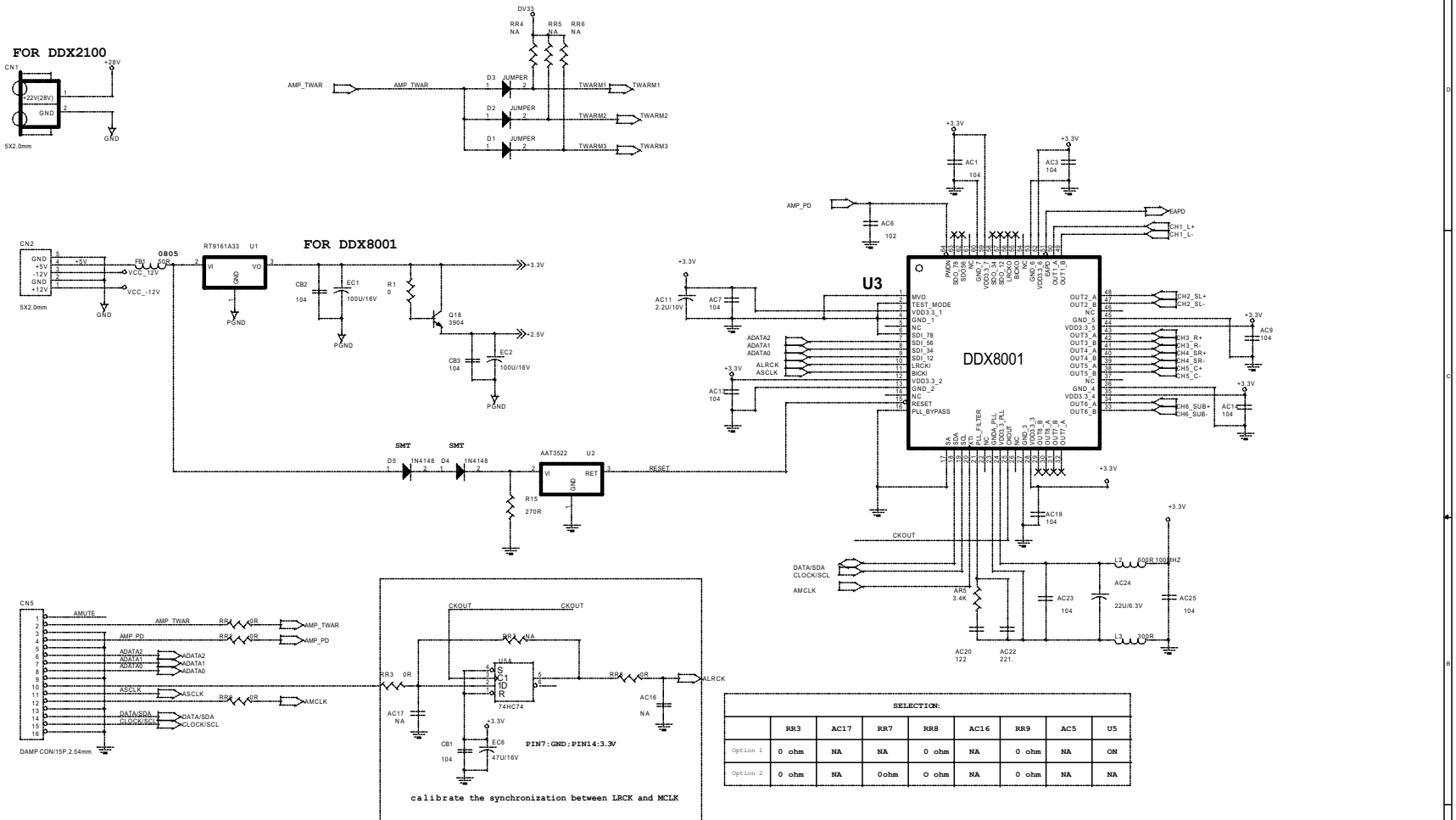

SELECTION:	RR3	AC17	RR7	RR8	AC16	RR9	AC5	U5
Option 1	0 ohm	NA	NA	0 ohm	NA	0 ohm	NA	ON
Option 2	0 ohm	NA	0ohm	O ohm	NA	0 ohm	NA	NA

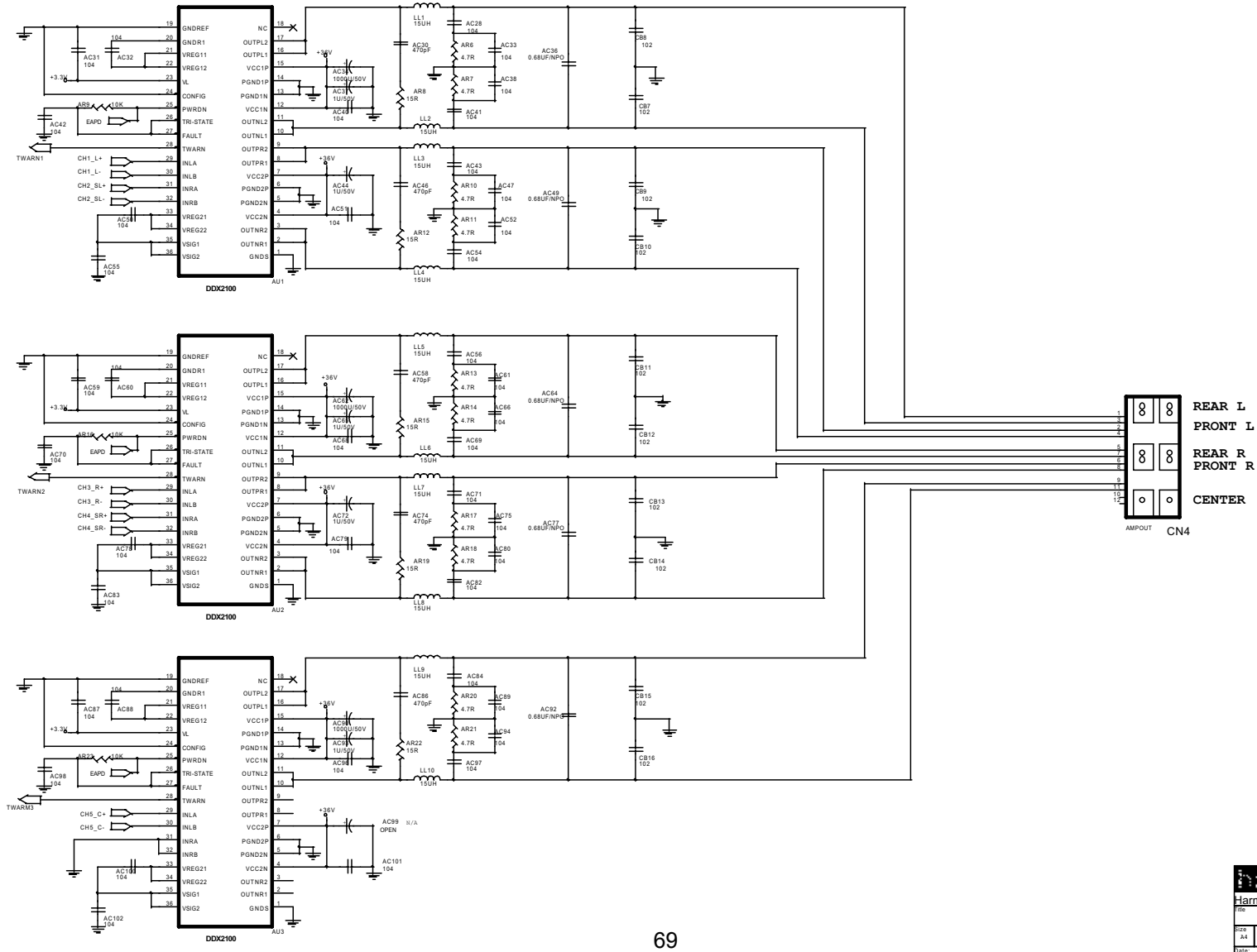

Harman Kardon, Northridge, California 91329, USA

File	HS100 AMP BOARD	050725	
Size A4	Document Number 1241C-1		Rev 3.43
Date: Tuesday, November 22, 2005	Sheet 23 of 24		