HARMAN-KARDON
MODEL T-120

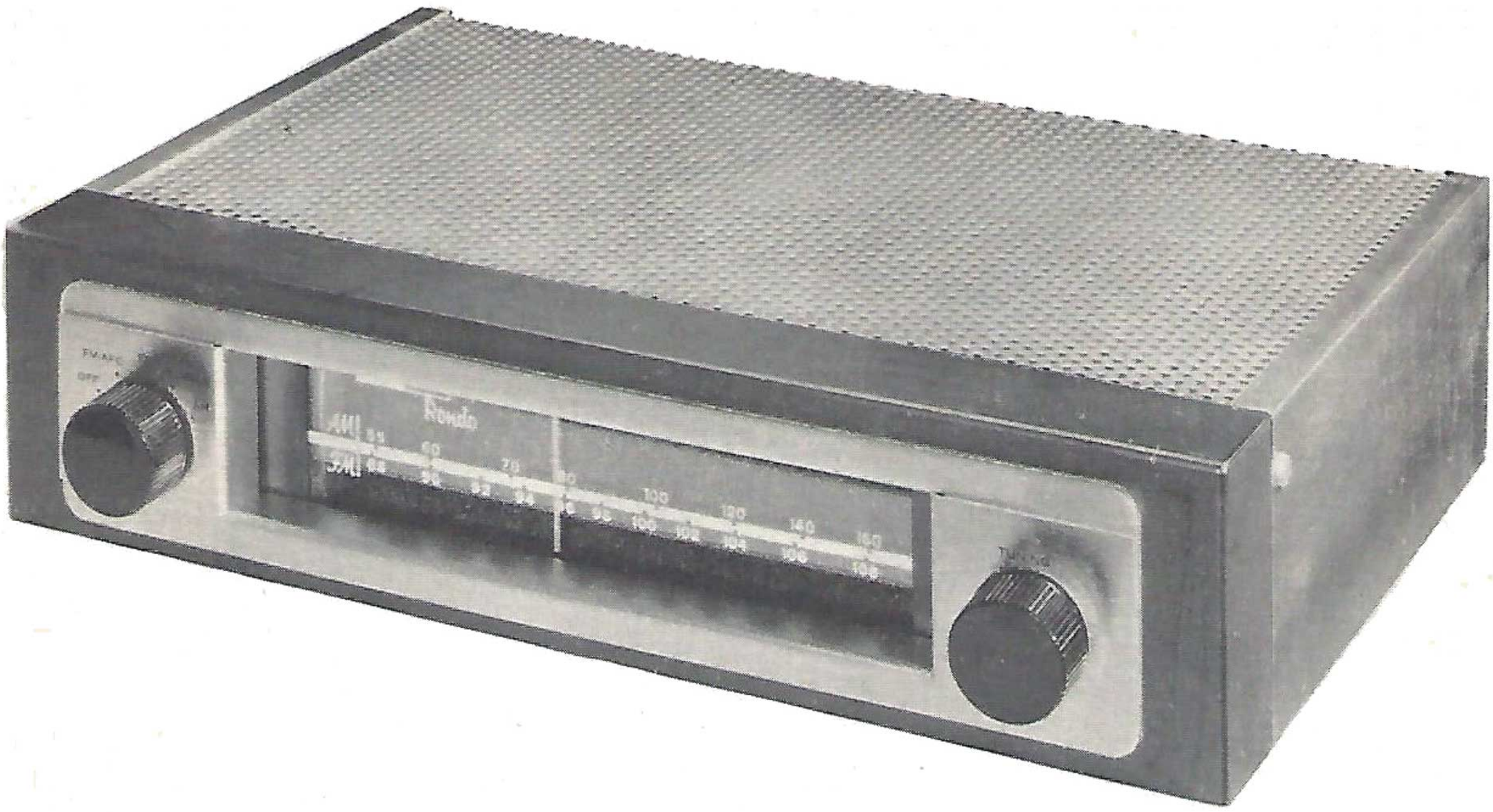

TRADE NAME	Harman-Kardon Model T-120		
MANUFACTURER	Harman-Kardon, Inc., 520 Main St., Westbury, L.I., N.Y.		
TYPE SET	AC Operated FM-AM Tuner		
TUBES (Eight)	Types 12AT7 FM RF Amp. -Mixer, 12AT7 FM Osc. -AFC, 6BE6 AM Conv., 6BA6 1st IF Amp., 6AU6 2nd FM IF Amp. -AM Det-AVC, 6AU6 Limiter, 6AL5 Disc., 12AU7A AF Amp. -Cath. Follower		
POWER SUPPLY	105-125 Volts AC - 60 Cycles	RATING	.35 Amp. @ 117 Volts AC (30 Watts)
TUNING RANGE -BROADCAST	530KC - 1650KC	FREQ. MOD.	88MC - 108MC

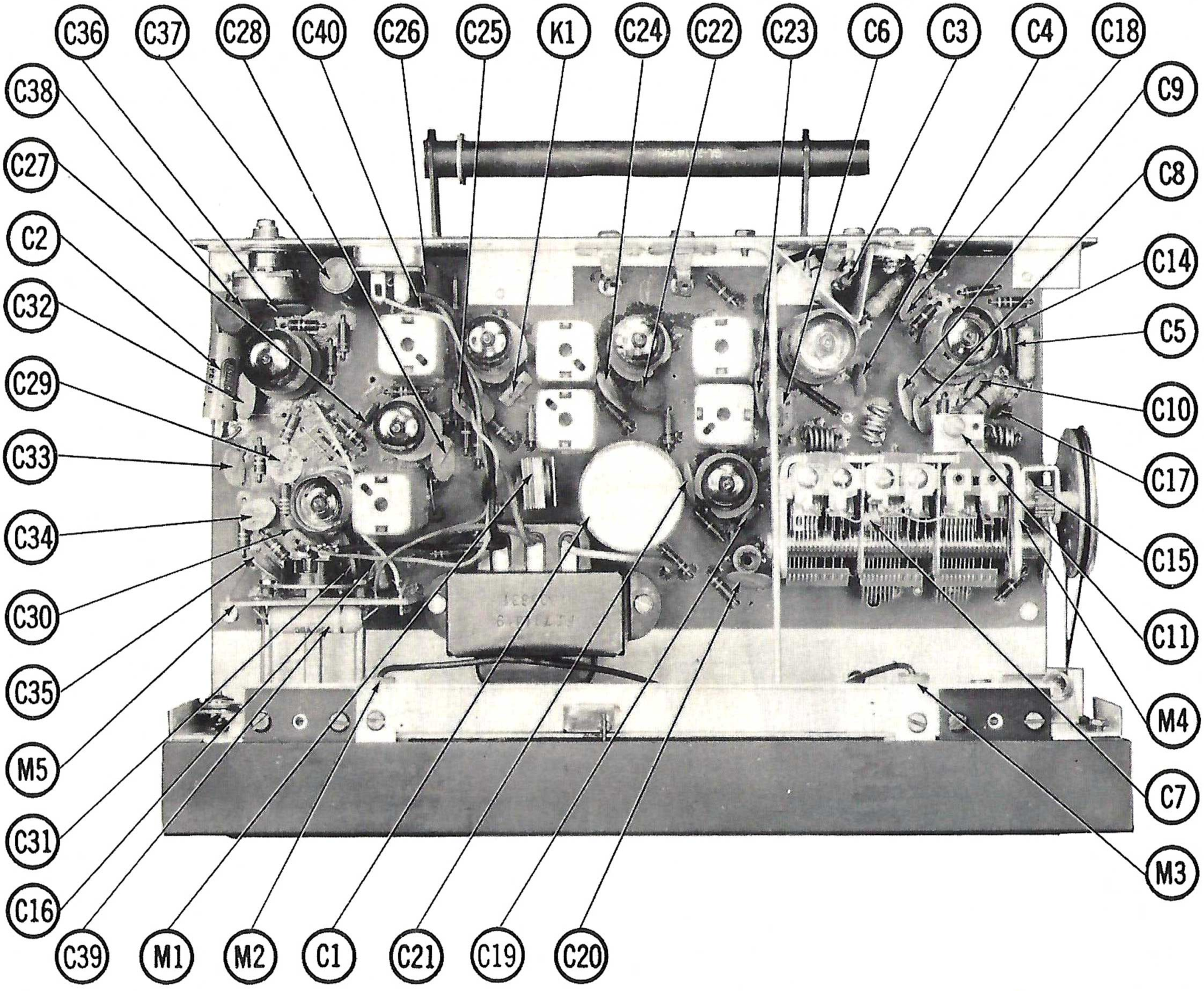

CHASSIS-TOP VIEW -CAPACITOR IDENTIFICATION

www.hifiengine.com

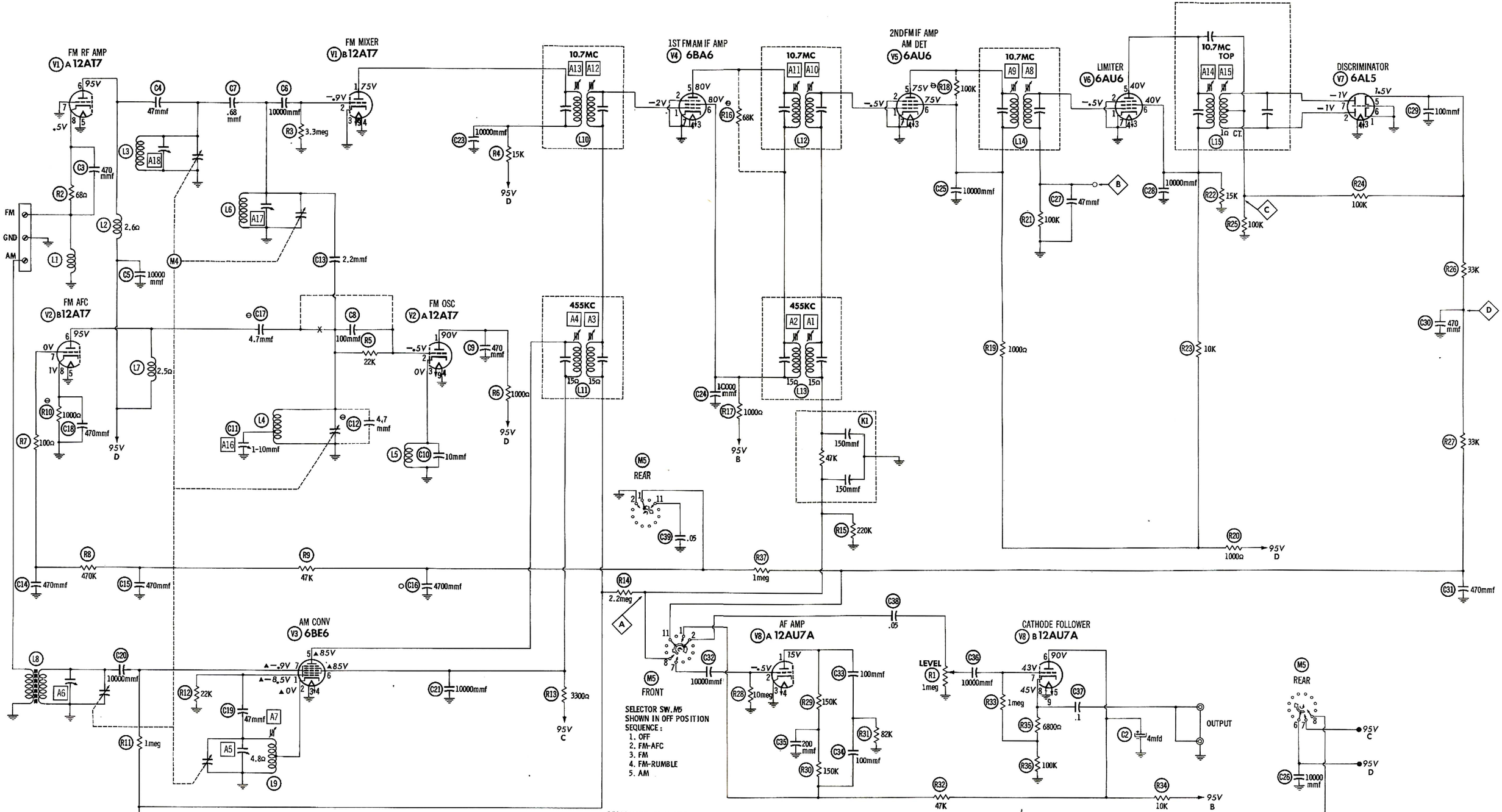

1. DC voltage measurements taken with vacuum tube voltmeter; AC voltages measured at 1000 ohms per volt.
2. Socket connections are shown as bottom views.
3. Measured values are from socket pin to commom negative.
4. Line voltage maintained at 117 volts for voltage readings.
5. Nominal tolerance on component values makes possible a variation of ±15% in voltage and resistance readings.
6. Volume control at maximum, no signal applied for voltage measurements.

DC COIL RESISTANCE VALUES UNDER ONE OHM NOT SHOWN ON SCHEMATIC DIAGRAM.

⊖ SEE PARTS LIST FOR ALTERNATE VALUE OR APPLICATION

RESISTANCE READINGS

ITEM	TUBE	Pin 1	Pin 2	Pin 3	Pin 4	Pin 5	Pin 6	Pin 7	Pin 8	Pin 9
V1	12AT7	†15K	3.3Meg	0Ω	0Ω	0Ω	†660Ω	0Ω	68Ω	.3Ω
V2	12AT7	†1660Ω	22K	.6Ω	0Ω	0Ω	†660Ω	540K	1000Ω	.3Ω
V3	6BE6	▲22K	▲.6Ω	0Ω	.3Ω	▲†4000Ω	▲†4000Ω	▲3.4Meg		
V4	6BA6	2.4Meg	0Ω	.3Ω	0Ω	†1600Ω	†1600Ω	0Ω		
V5	6AU6	270K	0Ω	.3Ω	0Ω	†2600Ω	†2600Ω	0Ω		
V6	6AU6	100K	0Ω	.3Ω	0Ω	†10K	†10K	0Ω		
V7	6AL5	0Ω	100K	.3Ω	0Ω	200K	0Ω	100K		
V8	12AU7A	†350K	10Meg	0Ω	.3Ω	.3Ω	†10K	1.1Meg	100K	0Ω

ALL MEASUREMENTS TAKEN IN "FM" POSITION UNLESS OTHERWISE NOTED.
† MEASURED FROM OUTPUT OF M1.
▲ MEASURED IN "AM" POSITION.

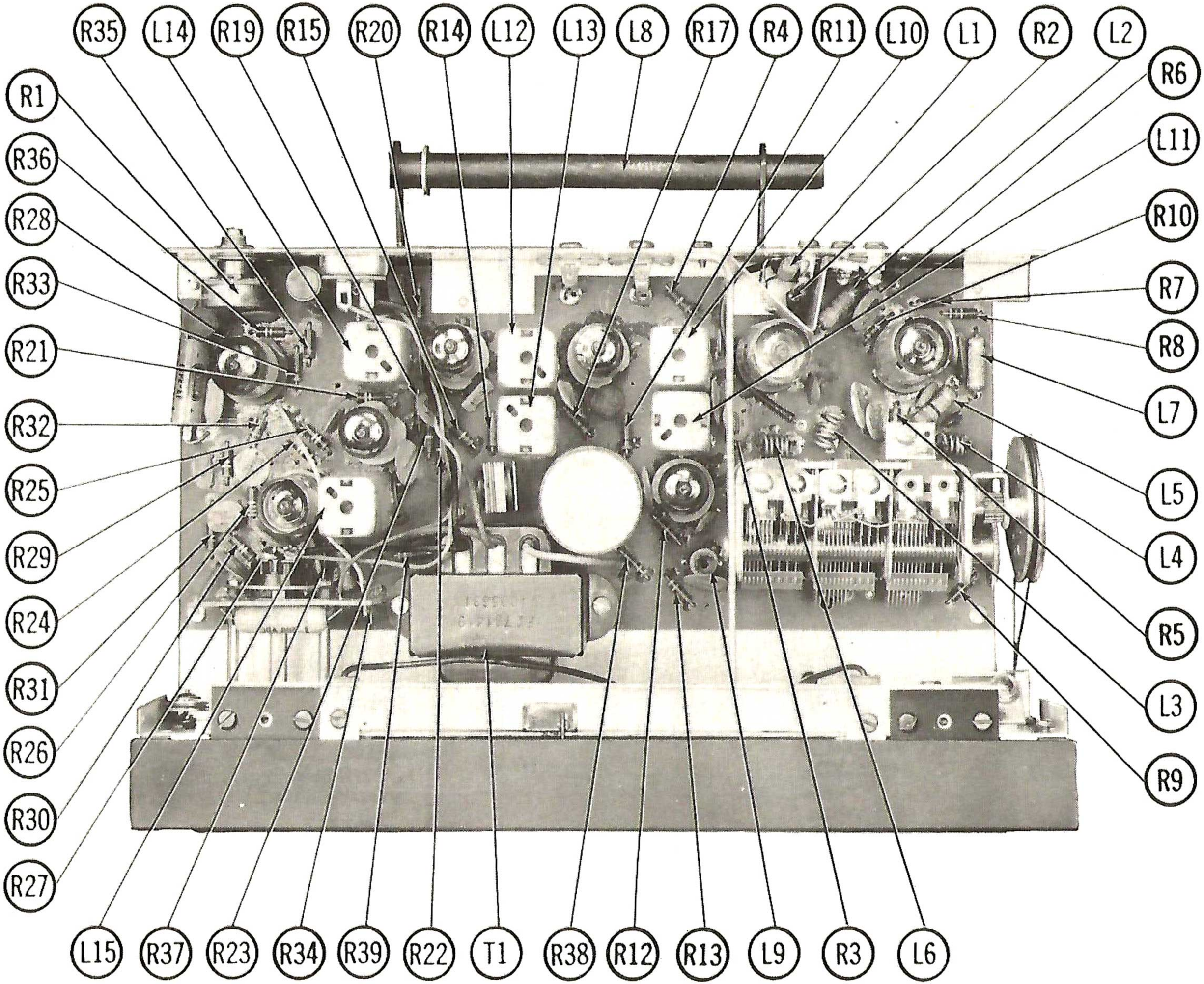

CHASSIS-TOP VIEW-RESISTOR IDENTIFICATION

ALIGNMENT INSTRUCTIONS

ALIGNMENT INSTRUCTIONS—READ CAREFULLY BEFORE ATTEMPTING ALIGNMENT

To set pointer, turn tuning capacitor fully closed and set pointer to last reference mark at low frequency end of dial.

AM ALIGNMENT

	DUMMY ANTENNA	SIGNAL GENERATOR COUPLING	SIGNAL GENERATOR FREQUENCY	BAND SWITCH POS.	RADIO DIAL SETTING	CONNECT VTVM	ADJUST	REMARKS
1.	.01MFD	High side to AM RF stator lug on tuning gang. Low side to chassis.	455KC (400∿ Mod)	AM	1600KC	DC probe to point (A). Common to chassis.	A1, A2, A3, A4	Adjust for maximum deflection.
2.	Direct	High side to AM antenna terminal. Low side to chassis.	1500KC	"	1500KC	"	A5, A6	"
3.	"	"	600KC	"	600KC	"	A7	"

FM IF ALIGNMENT USING AM SIGNAL GENERATOR AND VTVM

	DUMMY ANTENNA	SIGNAL GENERATOR COUPLING	SIGNAL GENERATOR FREQUENCY	BAND SWITCH POS.	RADIO DIAL SETTING	CONNECT VTVM	ADJUST	REMARKS
4.	.01MFD	High side to FM RF stator lug on tuning gang. Low side to chassis.	10.7MC (unmod)	FM	Point of non-interference.	DC probe to point (B). Common to chassis.	A8, A9, A10, A11, A12, A13	Adjust for maximum deflection.
5.	"	"	"	"	"	DC probe to point (C). Common to chassis.	A14	"
6.	"	"	"	"	"	DC probe to point (D). Common to chassis.	A15	Adjust for zero reading. A positive and negative reading will be obtained on either side of the correct setting.

FM IF ALIGNMENT USING FM SIGNAL GENERATOR AND OSCILLOSCOPE

Use frequency modulated signal with 60∿ modulation and 450KC sweep. Use 120∿ sawtooth voltage in scope for horizontal deflection.

	DUMMY ANTENNA	SIGNAL GENERATOR COUPLING	SIGNAL GENERATOR FREQUENCY	BAND SWITCH POS.	RADIO DIAL SETTING	CONNECT SCOPE	ADJUST	REMARKS
4.	.01MFD	High side to FM RF stator lug on tuning gang. Low side to chassis.	10.7MC (450KC Swp)	FM	Point of non-interference.	Vert. amp. to point (B). Low side to chassis.	A8, A9, A10, A11, A12, A13	Adjust for curve of maximum amplitude and symmetry similar to Fig. 1.
5.	"	"	"	"	"	Vert. amp. to point (C). Low side to chassis.	A14	"
6.	"	"	"	"	"	Vert. amp. to point (D). Low side to chassis.	A15	Adjust so that 10.7MC occurs at center of crossover lines similar to Fig. 2. SLIGHTLY retouch A14 for maximum amplitude and straightness of crossover lines.

FM RF ALIGNMENT

	DUMMY ANTENNA	SIGNAL GENERATOR COUPLING	SIGNAL GENERATOR FREQUENCY	BAND SWITCH POS.	RADIO DIAL SETTING	CONNECT VTVM	ADJUST	REMARKS
7.	270Ω carbon resistor	High side thru 270Ω to FM antenna terminals. Low side to chassis.	106MC	FM	106MC	DC probe to point (B). Common to chassis.	A16, A17, A18	Adjust for maximum deflection.
8.	"	"	90MC	"	90MC	"	L3, L4, L5	Adjust for maximum deflection by compressing or expanding coil turns.

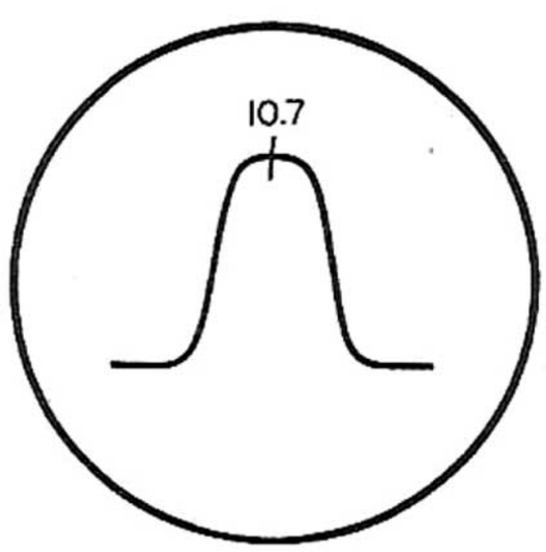

FIG. 1

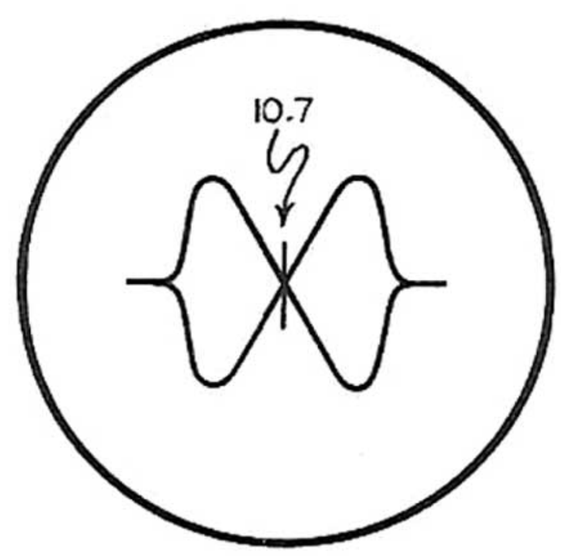

FIG. 2

PARTS LIST AND DESCRIPTIONS

TUBES (GENERAL ELECTRIC, SYLVANIA)

ITEM No.	USE	TYPE	NOTES
V1	FM RF Amp. -FM Mixer	12AT7	
V2	FM Osc. -FM AFC	12AT7	
V3	AM Converter	6BE6	
V4	1st IF Amplifier	6BA6	
V5	2nd FM IF Amp. -AM Det. -AVC	6AU6	
V6	Limiter	6AU6	
V7	Discriminator	6AL5	
V8	AF Amp. -Cath. Follower	12AU7A	

ELECTROLYTIC CAPACITORS

ITEM No.	RATING		REPLACEMENT DATA						
	CAP.	VOLT.	Harman-Kardon PART No.	AEROVOX PART No.	CORNELL-DUBILIER PART No.	MALLORY PART No.	PYRAMID PART No.	SANGAMO PART No.	SPRAGUE PART No.
C1A	■40	150	JE781436C						
B	▲60	150							
C	60	150							
C2	4	150		PRS150V4	BBR4-150	TC40	TD-4-150	FM-1504	TVA-1402

FIXED CAPACITORS

Capacity values given in the rating column are in mfd. for Paper Capacitors, and in mmfd. for Mica and Ceramic Capacitors.

ITEM No.	RATING		REPLACEMENT DATA							NOTES
	CAP.	VOLT	Harman-Kardon PART No.	AEROVOX PART No.	CENTRALAB PART No.	CORNELL-DUBILIER PART No.	ERIE PART No.	MALLORY PART No.	SPRAGUE PART No.	
C3	470			BPD-00047	DD-471	LT6T47	ED-470	UC-5347	5GA-T47	
C4	47			N750-SI 47	TCN-47	C10Q47U	TC7-47	NT-5447	5TCU-Q47	
C5	10000			BPD-01	DD-103	BYA6S1	ED-01	DC511	5HK-S1	
C6	10000			BPD-01	DD-103	BYA6S1	ED-01	DC511	5HK-S1	
C7	.68				TCZ-R68					
C8	100			N750-SI 100	TCN-100	C10T1U	TC7-100	NT-531	5TCU-T1	
C9	470			BPD-00047	DD-471	BYA10T47	ED-470	UC-5347	5GA-T47	
C10	10			N750-SI 10	TCN-10	C10Q1U	TC7-10	NT-541	5TCU-Q1	
C11	1-10		JV20688							
C12	4.7			NP0-SI 4.7	TCZ-4R7	C10V47C	TCO-4.7	ZT-5547	5TCCB-V47	Note 3
C13	2.2			NP0-SI 2.2	TCZ-2R2	C10V22C	TCO-2.2		5TCCB-V22	
C14	470			BPD-00047	DD-471	BYA6T47	ED-470	UC-5347	5GA-T47	
C15	470			BPD-00047	DD-471	BYA6T47	ED-470	UC-5347	5GA-T47	
C16	4700			BPD-0047	D6-472	LT6D47	GP-4700	UC-5247	5HK-D47	Note 2
C17	4.7			NP0-SI 4.7	TCZ-4R7	C10V47C	TCO-4.7	ZT-5547	5TCCB-V47	Note 1
C18	470			BPD-00047	DD-471	BYA6T47	ED-470	UC-5347	5GA-T47	
C19	47			N750-SI 47	TCN-47	C10Q47U	TC7-47	NT-5447	5TCU-Q47	
C20	10000			BPD-01	DD-103	BYA6S1	ED-01	DC511	5HK-S1	
C21	10000			BPD-01	DD-103	BYA6S1	ED-01	DC511	5HK-S1	
C22	.05	200		BPD-05	DF-503	BC2S47J		ACE615	2SE-S47	
C23	10000			BPD-01	DD-103	BYA6S1	ED-01	DC511	5HK-S1	
C24	10000			BPD-01	DD-103	BYA6S1	ED-01	DC511	5HK-S1	
C25	10000			BPD-01	DD-103	BYA6S1	ED-01	DC511	5HK-S1	
C26	10000			BPD-01	DD-103	BYA6S1	ED-01	DC511	5HK-S1	
C27	47			N750-SI 47	TCN-47	C10Q47U	TC7-47	NT-5447	5TCU-Q47	
C28	10000			BPD-01	DD-103	BYA6S1	ED-01	DC511	5HK-S1	
C29	100			N750-SI 100	TCN-100	C10T1U	TC7-100	NT-531	5TCU-T1	
C30	470			BPD-00047	DD-471	BYA10T47	ED-470	UC-5347	5GA-T47	
C31	470			BPD-00047	DD-471	BYA10T47	ED-470	UC-5347	5GA-T47	
C32	10000			BPD-01	DD-103	BYA6S1	ED-01	DC511	5HK-S1	
C33	100			N750-SI 100	TCN-100	C10T1U	TC7-100	NT-531	5TCU-T1	
C34	100			N750-SI 100	TCN-100	C10T1U	TC7-100	NT-531	5TCU-T1	
C35	200				TCZ-200		TCO-200			
C36	10000			BPD-01	DD-103	BYA6S1	ED-01	DC511	5HK-S1	
C37	.1	200			DF-104	BC2P1J		ACE601	2SE-P1	
C38	.05	200		BPD-05	DF-503	BC2S47J		ACE615	2SE-S47	
C39	.05	200		BPD-05	DF-503	CUB2S5		GEM-415	2TM-S5	
C40	10000			BPD-01	DD-103	BYA6S1	ED-01	DC511	5HK-S1	

Note 1: Some versions use 10MMF in this application.
Note 2: Some versions use 10000MMF in this application.
Note 3: Not used in some versions.

CONTROLS

ITEM No.	RATING		REPLACEMENT DATA					INSTALLATION NOTES
	RESIST-ANCE	WATTS	Harman-Kardon PART No.	CENTRALAB PART No.	CLAROSTAT PART No.	IRC PART No.	MALLORY PART No.	
R1	1Meg	½	RV811600					Output Level

CHASSIS—TOP VIEW

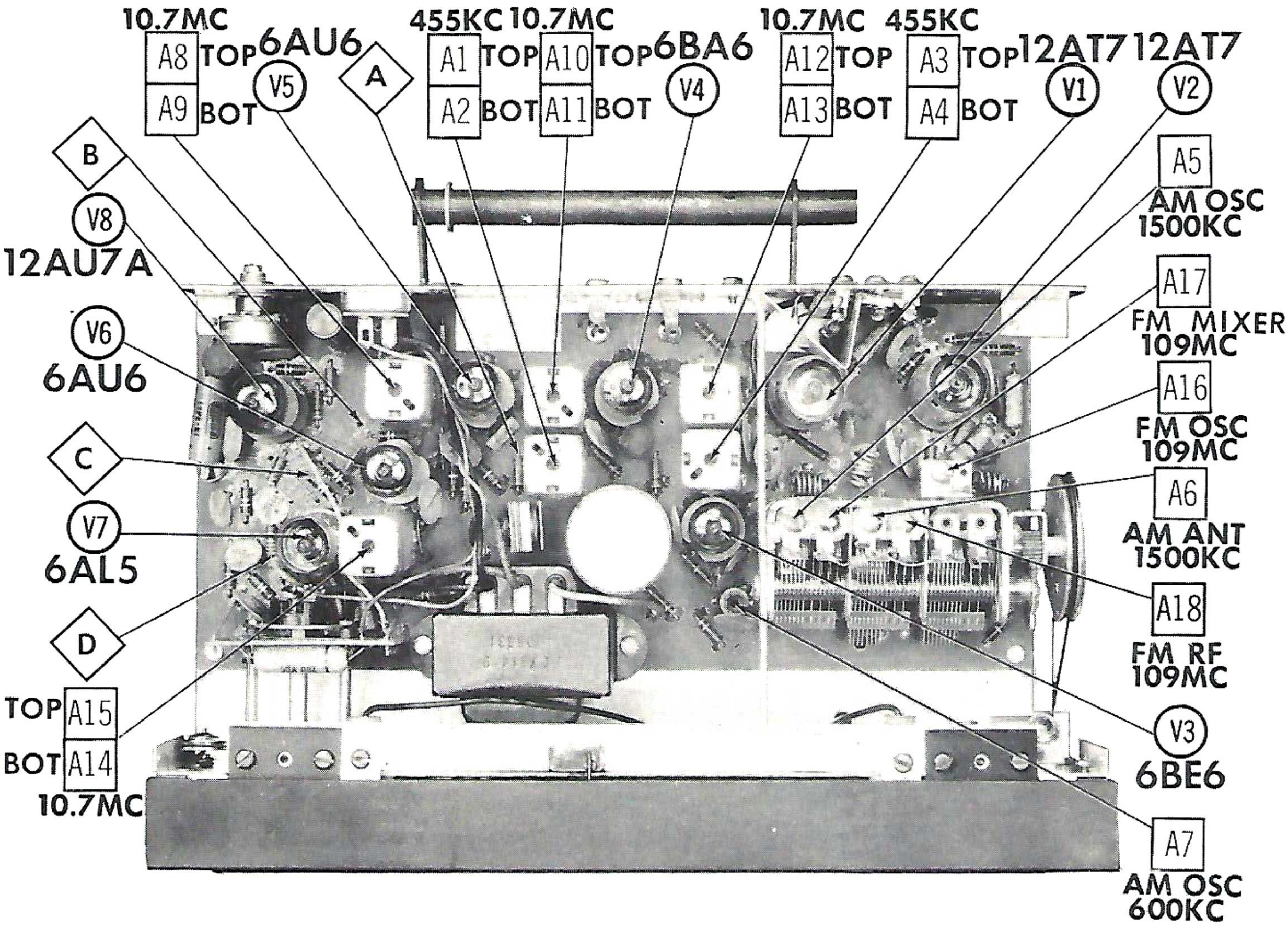

RESISTORS

All wattages 1/2 watt, or less, unless otherwise listed.

ITEM No.	RATING		REPLACEMENT DATA		NOTES
	OHMS	WATT	Harman-Kardon PART No.	IRC PART No.	
R2	68Ω			BTS-68	
R3	3.3Meg			BTS-3.3Meg	
R4	15K			BTS-15K	
R5	22K			BTS-22K	Note 3
R6	1000Ω			BTS-1000	
R7	100Ω			BTS-100	
R8	470K			BTS-470K	
R9	47K			BTS-47K	
R10	1000Ω			BTS-1000	Note 1
R11	1Meg			BTS-1Meg	
R12	22K			BTS-22K	
R13	3300Ω			BTS-3300	
R14	2.2Meg			BTS-2.2Meg	
R15	220K			BTS-220K	
R16	68K			BTS-68K	Note 2
R17	1000Ω			BTS-1000	
R18	100K			BTS-100K	Note 2
R19	1000Ω			BTS-1000	
R20	1000Ω			BTS-1000	

ITEM No.	RATING		REPLACEMENT DATA		NOTES
	OHMS	WATT	Harman-Kardon PART No.	IRC PART No.	
R21	100K			BTS-100K	
R22	15K			BTS-15K	
R23	10K			BTS-10K	
R24	100K			BTS-100K	
R25	100K			BTS-100K	
R26	33K			BTS-33K	
R27	33K			BTS-33K	
R28	10Meg			BTS-10Meg	
R29	150K			BTS-150K	
R30	150K			BTS-150K	
R31	82K			BTS-82K	
R32	47K			BTS-47K	
R33	1Meg			BTS-1Meg	
R34	10K			BTS-10K	
R35	6800Ω			BTS-6800	
R36	100K			BTS-100K	
R37	1Meg			BTS-1Meg	
R38	330Ω			BTS-330	
R39	330Ω			BTS-330	

Note 1: 560Ω used in some versions.
Note 2: Not used in some versions.
Note 3: 10K used in some versions.

TRANSFORMER (POWER)

ITEM No.	RATING				REPLACEMENT DATA					
	PRI.	SEC. 1	SEC. 2	SEC. 3	Harman-Kardon PART No.	Halldorson PART No.	Merit PART No.	Stancor PART No.	Thordarson PART No.	Triad PART No.
T1	117VAC @ .35A	120VAC @ .037A Tap @ 6.3VAC @ 2.45A			FT7814190					

COILS (RF-IF)

ITEM No.	USE	REPLACEMENT DATA				NOTES
		Harman-Kardon PART No.	MEISSNER PART No.	MERIT PART No.	MILLER PART No.	
L1	FM Ant. Coil					.24 Microhenries; IRC part #CLA
L2	FM RF Choke					3.3 Microhenries; IRC part #CLA
L3	FM RF Coil	GL781543				
L4	FM Osc. Coil	GL781544				
L5	Cathode Choke		19-1000		4602	1 Microhenry; IRC part#CLA
L6	FM Mixer Coil	GL781543				
L7	RF Choke		19-1000		4602	1 Microhenry; IRC part #CLA - Note 1
L8	Loop Stick	GL781479A				
L9	AM Osc. Coil					
L10	1st FM IF	GL781491A	16-3490			
L11	1st AM IF	GT781493A	16-6780		13-PC1	
L12	2nd FM IF	GT781570	16-3490			
L13	2nd AM IF	GT781493A	16-6780		13-PC2	
L14	FM Limiter	GT781570	16-3490			
L15	FM Discriminator	GT781492A	17-3491			

Note 1: Some versions may use 3.3 Microhenries.

COMPONENT COMBINATIONS

ITEM No.	USE	DESCRIPTION	Harman-Kardon PART No.	REPLACEMENT DATA	
K1	AM Det. RF Filter	150MMF, 150MMF, 47K		Aerovox Centralab Cornell-Dubilier Erie Sprague	PA-98 PC-51 111TM2 1403-02 D-2

SELENIUM RECTIFIER

ITEM No.	RATING	REPLACEMENT DATA						NOTES
	CURRENT	Harman-Kardon PART No.	FEDERAL PART No.	INTERNATIONAL PART No.	MALLORY PART No.	RADIO RECEPTOR PART No.	SARKES TARZIAN PART No.	
M1	.037A	Z781490		RS065Q		8J1B	50	

MISCELLANEOUS

ITEM No.	PART NAME	Harman-Kardon PART No.	NOTES
M2	Dial Light		#51
M3	Dial Light		#51
M4	Tuning Cap.	C811553A	6 Gang, Alternate part #JV811553.
M5	Switch	ER8115453	Function
	Glass	P811551A	Dial Ass'y.
	Pointer	Z811552A	
	Knob	P25790	Function, Tuning
	Cabinet	P811557A	Metal

TUNING GANG FULLY CLOSED

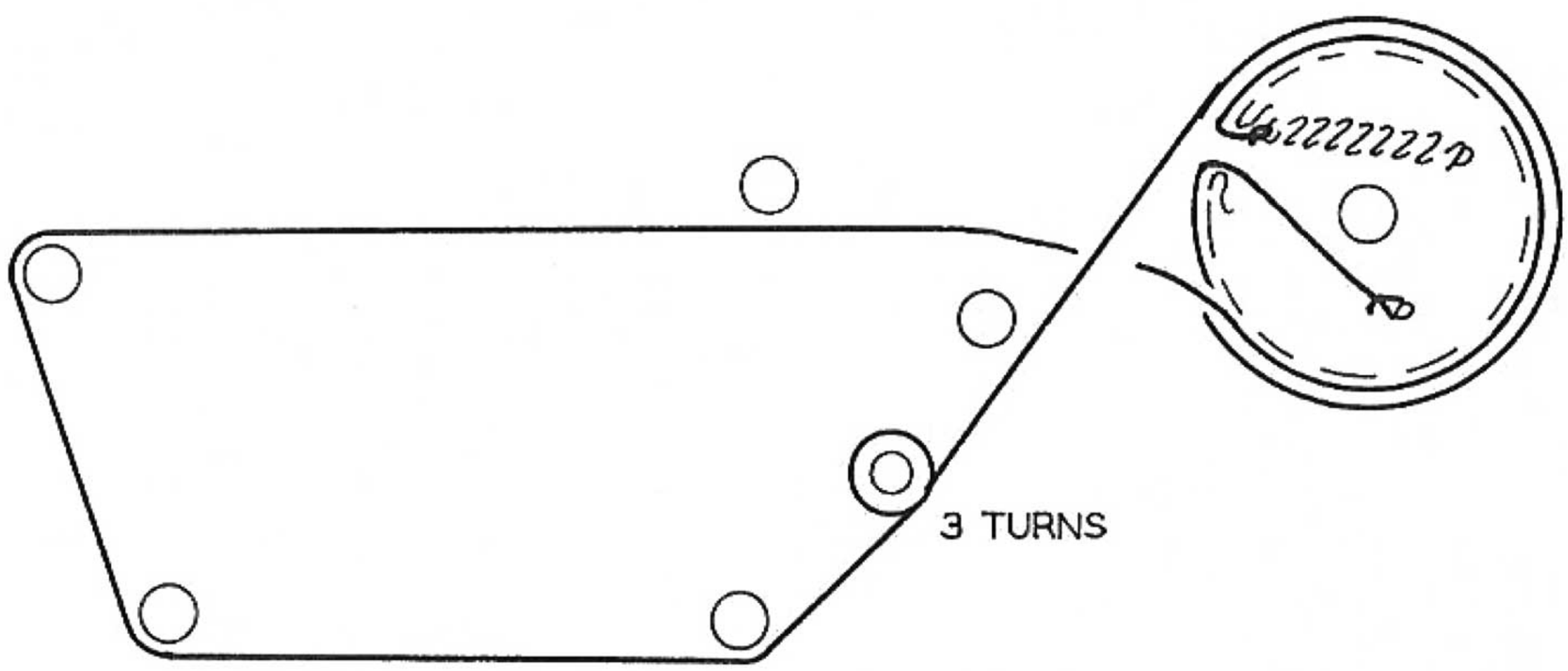

DIAL CORD STRINGING