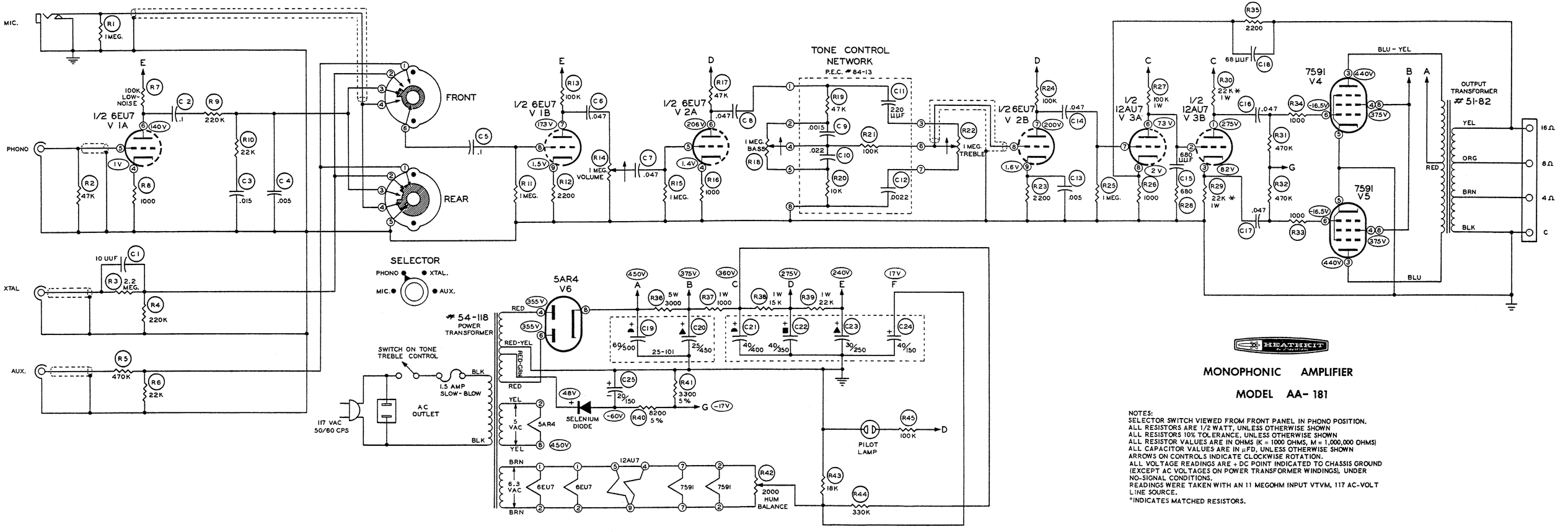

HEATHKIT

MONOPHONIC AMPLIFIER

MODEL AA-181
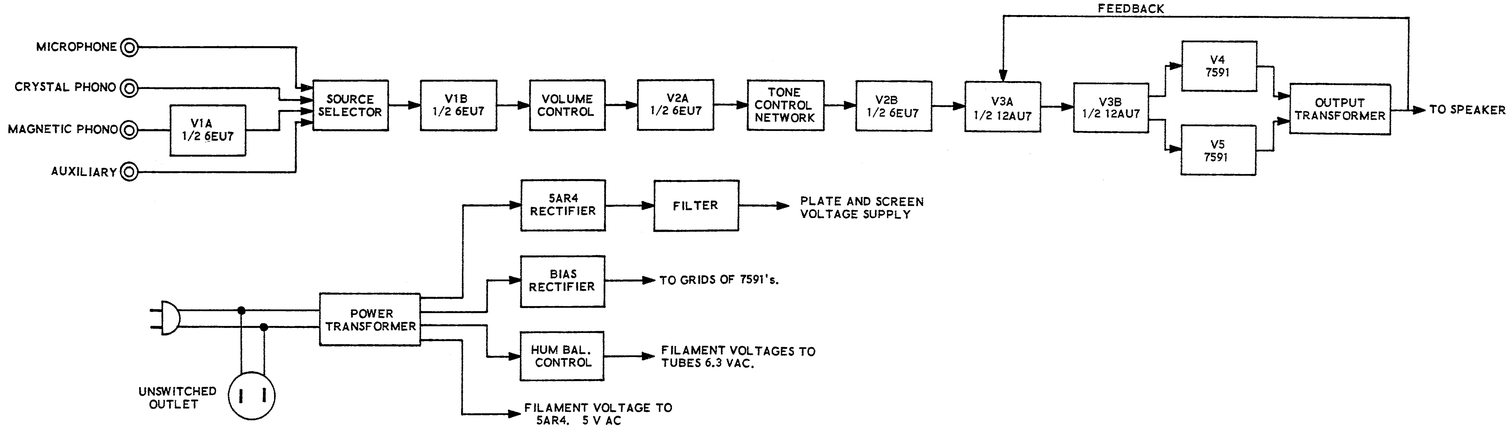
NOTES:
SELECTOR SWITCH VIEWED FROM FRONT PANEL IN PHONO POSITION.
ALL RESISTORS ARE 1/2 WATT, UNLESS OTHERWISE SHOWN
ALL RESISTORS 10% TOLERANCE, UNLESS OTHERWISE SHOWN
ALL RESISTOR VALUES ARE IN OHMS (K = 1000 OHMS, M = 1,000,000 OHMS)
ALL CAPACITOR VALUES ARE IN μFD, UNLESS OTHERWISE SHOWN
ARROWS ON CONTROLS INDICATE CLOCKWISE ROTATION.
ALL VOLTAGE READINGS ARE + DC POINT INDICATED TO CHASSIS GROUND (EXCEPT AC VOLTAGES ON POWER TRANSFORMER WINDINGS), UNDER NO-SIGNAL CONDITIONS.
READINGS WERE TAKEN WITH AN 11 MEGOHM INPUT VTVM, 117 AC-VOLT LINE SOURCE.
*INDICATES MATCHED RESISTORS.