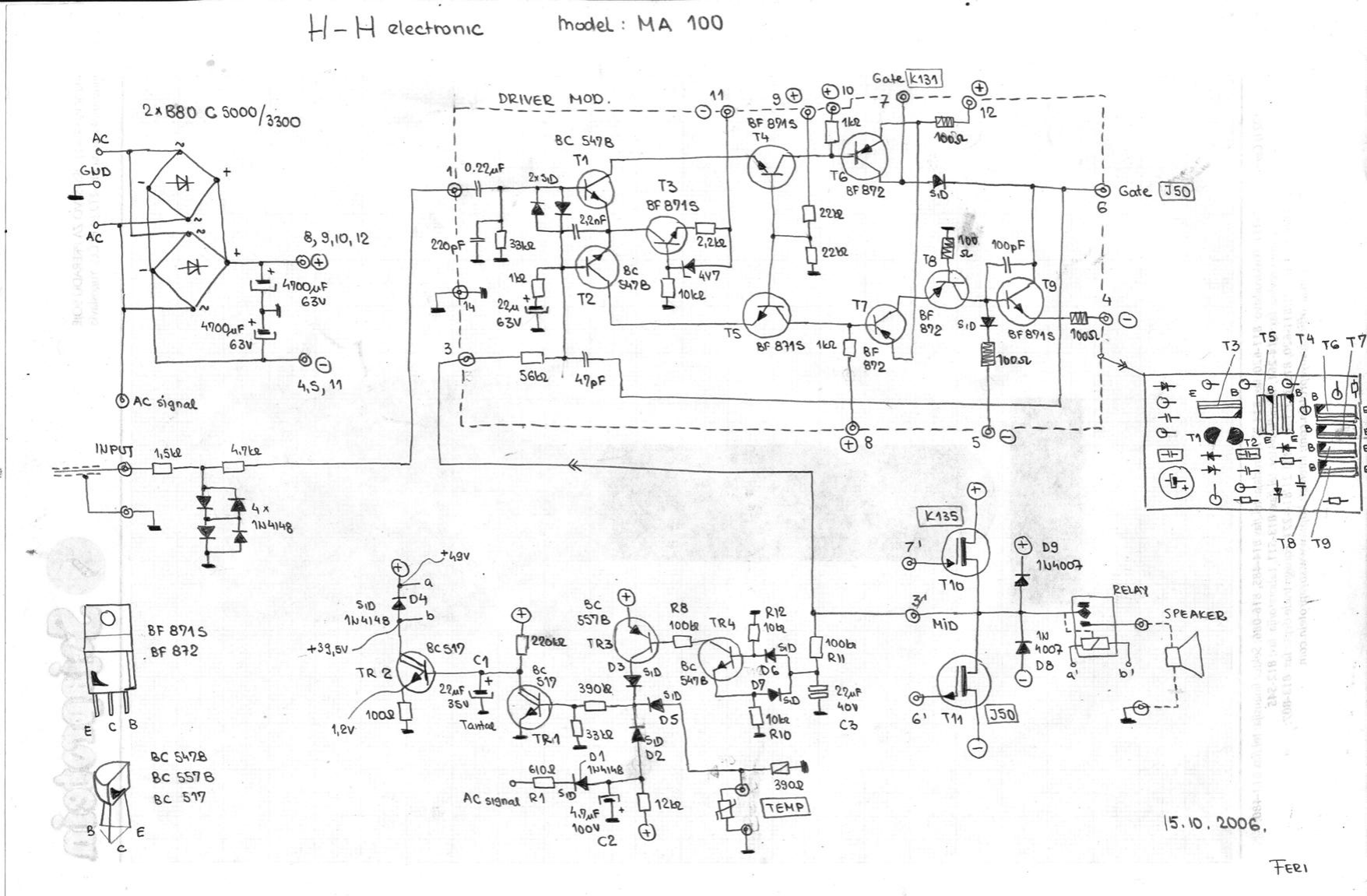H – H electronic model : MA 100