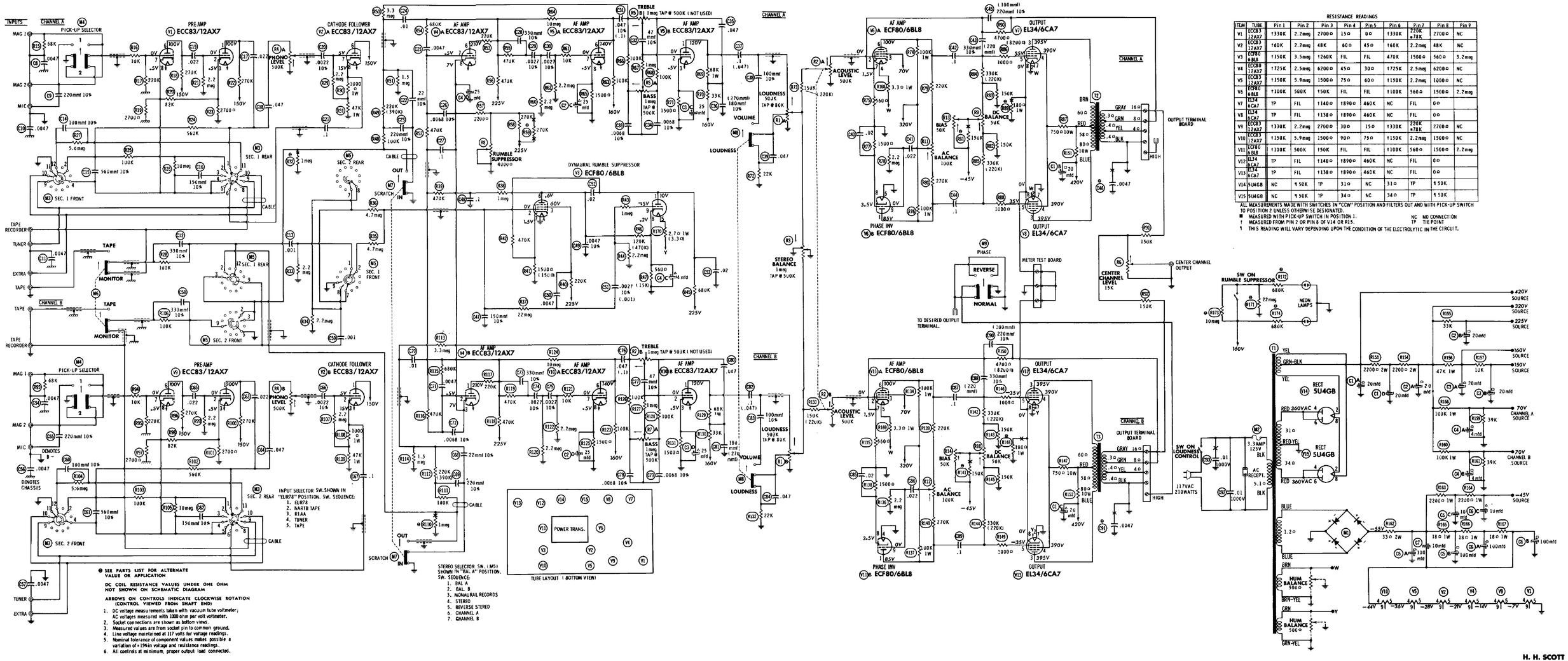

● SEE PARTS LIST FOR ALTERNATE VALUE OR APPLICATION

DC COIL RESISTANCE VALUES UNDER ONE OHM NOT SHOWN ON SCHEMATIC DIAGRAM

ARROWS ON CONTROLS INDICATE CLOCKWISE ROTATION (CONTROL VIEWED FROM SHAFT END)

1. DC voltage measurements taken with vacuum tube voltmeter; AC voltages measured with 1000 ohm per volt voltmeter.
2. Socket connections are shown as bottom views.
3. Measured values are from socket pin to common ground.
4. Line voltage maintained at 117 volts for voltage readings.
5. Nominal tolerance of component values makes possible a variation of ±15% in voltage and resistance readings.
6. All controls at minimum, proper output load connected.

RESISTANCE READINGS

ITEM	TUBE	Pin 1	Pin 2	Pin 3	Pin 4	Pin 5	Pin 6	Pin 7	Pin 8	Pin 9
V1	ECC83 12AX7	330K	2.2meg	2700Ω	15Ω	0Ω	330K	220K ±78K	2700Ω	NC
V2	ECC83 12AX7	160K	2.2meg	48K	60Ω	45Ω	160K	2.2meg	48K	NC
V3	ECF80 6BL8	150K	3.5meg	1260K	FIL	FIL	470K	1500Ω	560Ω	3.2meg
V4	ECC83 12AX7	175K	2.5meg	6200Ω	45Ω	30Ω	175K	2.5meg	6200Ω	NC
V5	ECC83 12AX7	150K	5.9meg	1500Ω	75Ω	60Ω	150K	2.2meg	1000Ω	NC
V6	ECF80 6BL8	100K	500K	150K	FIL	FIL	100K	560Ω	1500Ω	2.2meg
V7	EL34 6CA7	TP	FIL	114Ω	189Ω	46Ω	NC	FIL	0Ω	
V8	EL34 6CA7	TP	FIL	113Ω	189Ω	46Ω	NC	FIL	0Ω	
V9	ECC83 12AX7	330K	2.2meg	2700Ω	38Ω	15Ω	330K	220K ±78K	2700Ω	NC
V10	ECC83 12AX7	150K	5.9meg	1500Ω	90Ω	75Ω	150K	2.2meg	1500Ω	NC
V11	ECF80 6BL8	100K	500K	150K	FIL	FIL	100K	560Ω	1500Ω	2.2meg
V12	EL34 6CA7	TP	FIL	114Ω	189Ω	46Ω	NC	FIL	0Ω	
V13	EL34 6CA7	TP	FIL	113Ω	189Ω	46Ω	NC	FIL	0Ω	
V14	5U4GB	NC	¶ 50K	TP	31Ω	NC	31Ω	TP	¶ 50K	
V15	5U4GB	NC	¶ 50K	TP	34Ω	NC	34Ω	TP	¶ 50K	

ALL MEASUREMENTS MADE WITH SWITCHES IN "CCW" POSITION AND FILTERS OUT AND WITH PICK-UP SWITCH TO POSITION 2 UNLESS OTHERWISE DESIGNATED.

■ MEASURED WITH PICK-UP SWITCH IN POSITION 1.

† MEASURED FROM PIN 2 OR PIN 8 OF V14 OR R15.

¶ THIS READING WILL VARY DEPENDING UPON THE CONDITION OF THE ELECTROLYTIC IN THE CIRCUIT.

NC NO CONNECTION
TP TIE POINT

H. H. SCOTT
MODEL 272