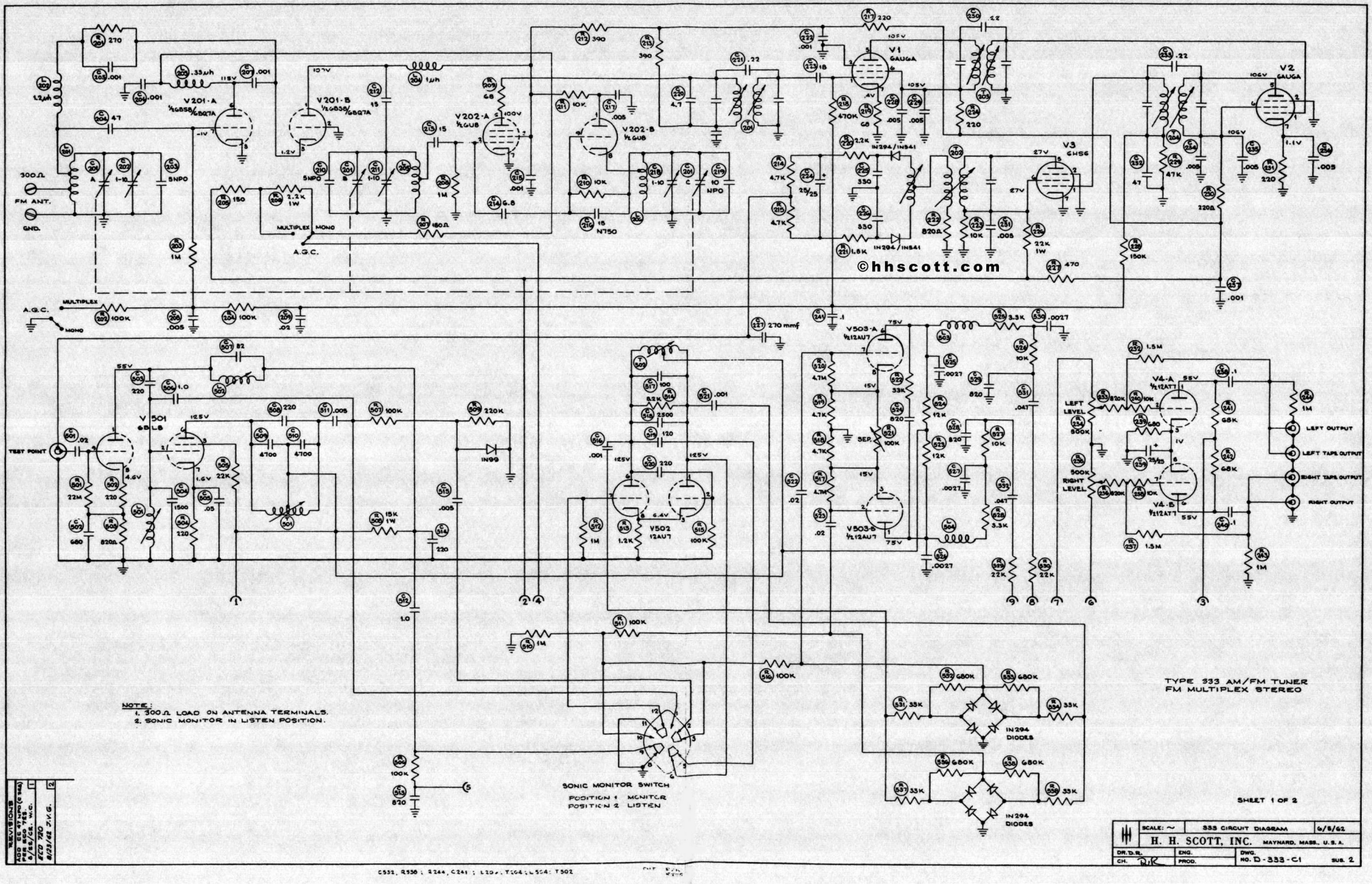
TYPE 333 AM/FM TUNER
FM MULTIPLEX STEREO
NOTE:
1. 300Ω LOAD ON ANTENNA TERMINALS.
2. SONIC MONITOR IN LISTEN POSITION.
SONIC MONITOR SWITCH
POSITION 1 MONITOR
POSITION 2 LISTEN
300Ω
FM ANT.
GND.
TEST POINT
A.G.C.
MULTIPLEX
MONO
LEFT LEVEL
RIGHT LEVEL
LEFT OUTPUT
LEFT TAPE OUTPUT
RIGHT TAPE OUTPUT
RIGHT OUTPUT
V1 6AU6A
V2 6AU6A
V3 6HS6
V4-A 1/2 12AT7
V4-B 1/2 12AT7
V501 6BL8
V502 12AU7
V503-A 1/2 12AU7
V503-B 1/2 12AU7
V201-A 1/2 6BS8/6BQ7A
V201-B 1/2 6BS8/6BQ7A
V202-A 1/2 6U8
V202-B 1/2 6U8
IN294 DIODES
IN294/IN541
IN99
©hhscott.com
SHEET 1 OF 2
SCALE: ~
333 CIRCUIT DIAGRAM
6/8/62
H. H. SCOTT, INC.
MAYNARD, MASS., U.S.A.
DR. D.R.
CH. D.K.
ENG.
PROD.
DWG. NO. D-333-C1
SUB. 2
REVISIONS
ADD C6 47 UFD (6 VOLT) PER ECO 723. 9/26/62 W.C.
ECO 780 6/23/62 J.K.G.
C532, R530 ; R244, C241 ; L201, T504, L504 ; T502

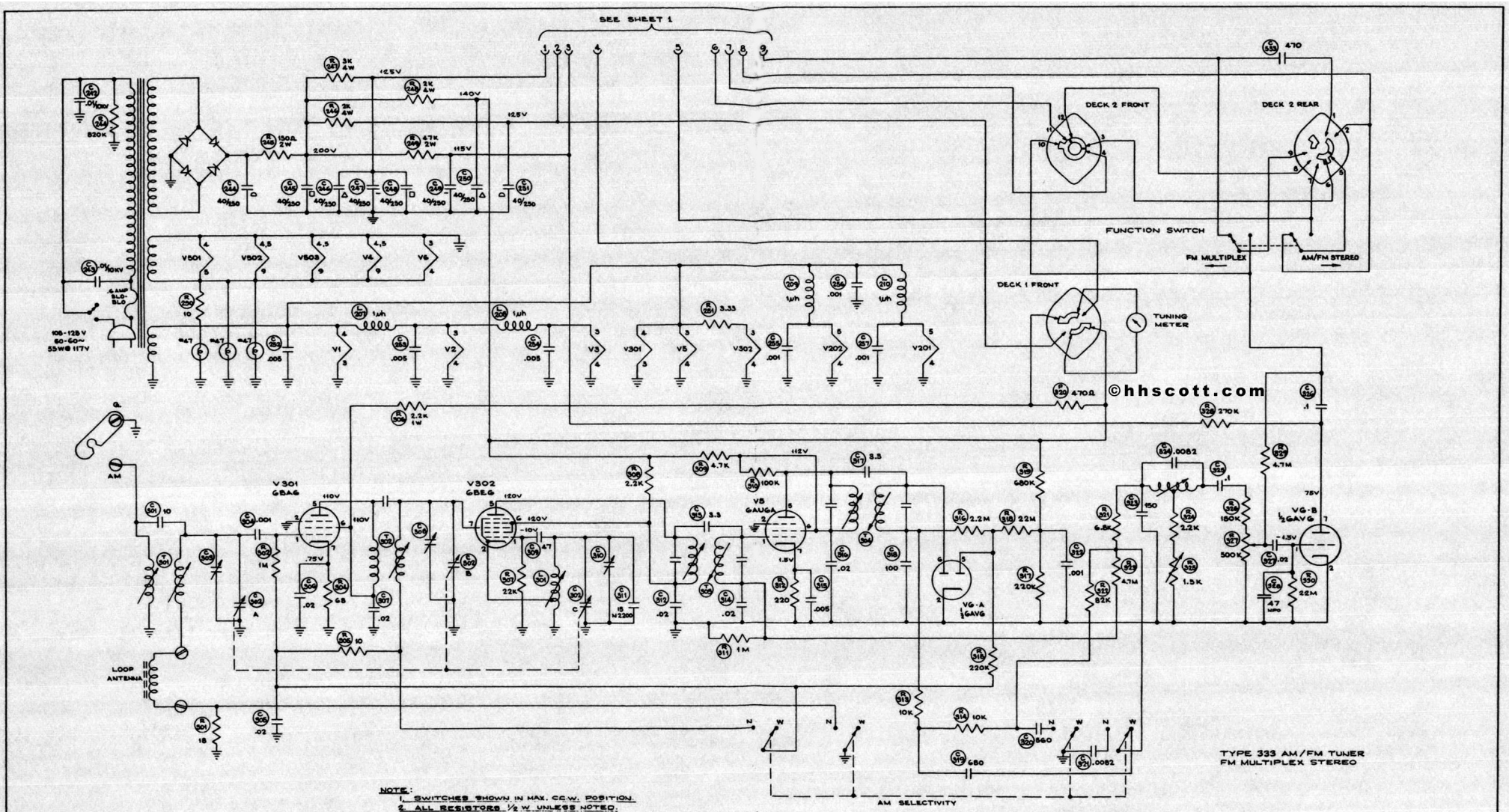

NOTE:
1. SWITCHES SHOWN IN MAX. CC.W. POSITION.
2. ALL RESISTORS ½ W UNLESS NOTED.
3. ALL VOLTAGES DC. ±15% MEASURED WITH V.O.M. (20,000 OHM/VOLT).
4. NO SIGNAL AND 117V LINE.

FUNCTION SWITCH

POSITION	FUNCTION
1	AM
2	FM MONO
3	STEREO
4	SUB CH. FILTER

SHEET 2 OF 2

SCALE: ~	333 CIRCUIT DIAGRAM		6/5/62
H. H. SCOTT, INC. MAYNARD, MASS., U.S.A.			
DR. DR.	ENG.	DWG. NO. D-333-C1	SUB. 2
CH. DJK	PROD.		

C328, R330; C257, R251; C333, ; T304, L301, L210