PRODUCT SAFETY NOTE: Components marked with a ⚠ have special characteristics important to safety.

CIRCUIT DIAGRAM

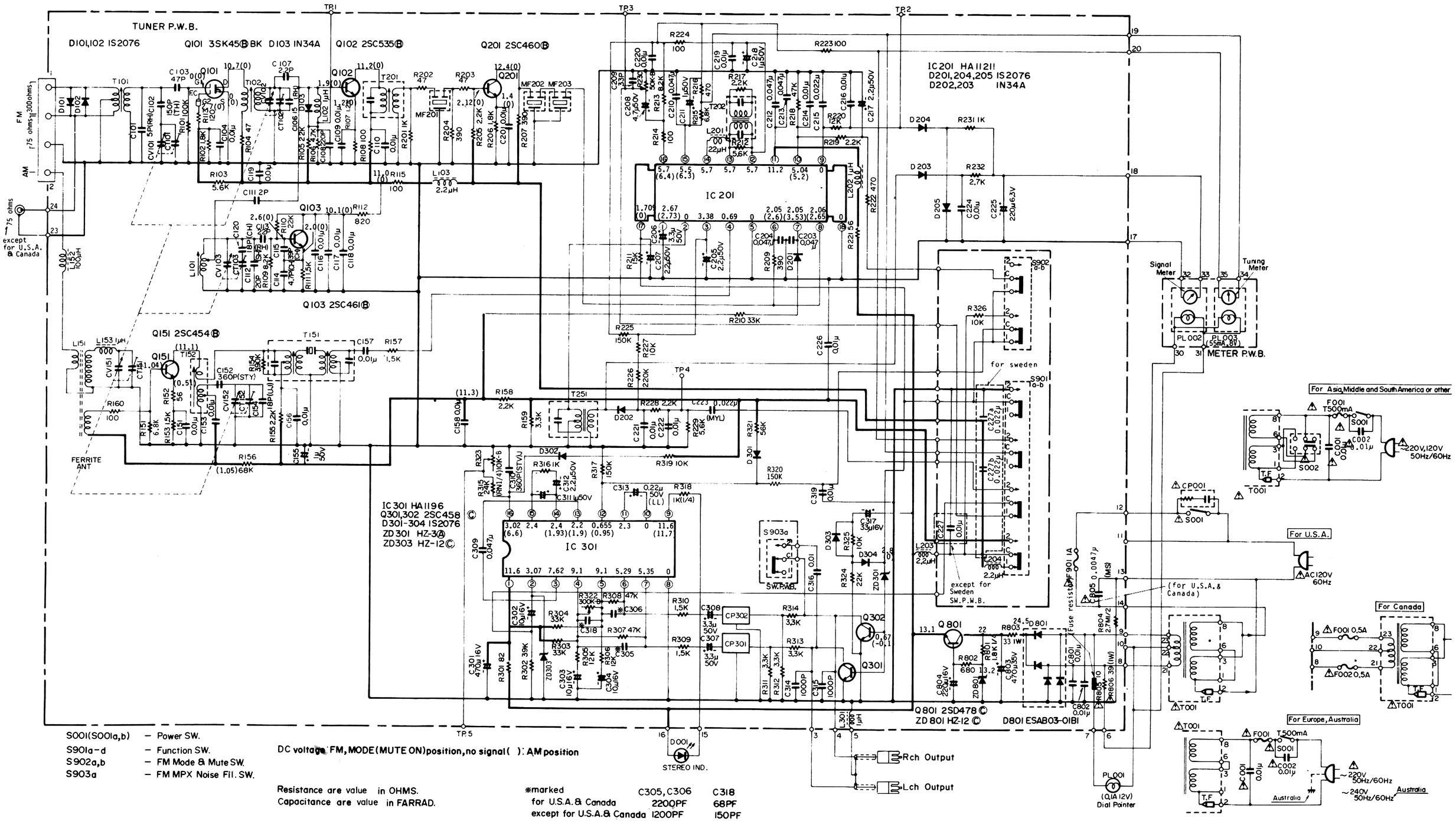

S001(S001a,b) – Power SW.
S901a–d – Function SW.
S902a,b – FM Mode & Mute SW.
S903a – FM MPX Noise Fil. SW.

DC voltage: FM, MODE(MUTE ON)position, no signal( ): AM position

Resistance are value in OHMS.
Capacitance are value in FARRAD.

*marked

	C305, C306	C318
for U.S.A.& Canada	2200PF	68PF
except for U.S.A.& Canada	1200PF	150PF

The circuit diagram is subject to change for improvement without notice.