HITACHI

SR-8010

SERVICE MANUAL

English
Français

No. 218

SPECIFICATIONS

• FM SECTION

Frequency range	88 – 108 MHz	
Usable sensitivity	Mono: 10.3 dBf (1.8 μV)	Stereo: 20 dBf (5.5 μV)
50 dB Quieting sensitivity	Mono: 17 dBf (3.9 μV)	Stereo: 37 dBf (39 μV)
Signal-to-noise ratio (at 65 dBf)	Mono: 74 dB	Stereo: 68 dB
Harmonic distortion (at 65 dBf)		
100 Hz	Mono: 0.2%	Stereo: 0.3%
1 kHz	Mono: 0.15%	Stereo: 0.25%
6 kHz	Mono: 0.25%	Stereo: 0.3%
Frequency response	30 Hz – 12 kHz (±0.5 dB)	
Image response ratio	90 MHz : 56 dB, 98 MHz : 50 dB, 106 MHz : 45 dB	
Spurious response ratio	80 dB	
IF response ratio	80 dB	
Alternate channel selectivity	70 dB	
Capture ratio	1 dB	
AM suppression	55 dB	
Stereo separation	45 dB (1 kHz)	
Sub carrier suppression	50 dB	
SCA rejection	65 dB	
Muting threshold	20 dBf (5.5 μV)	
Antenna input	300 ohms balanced	

( ) is indicated IHF '58.

• AM SECTION

Frequency range	530 – 1,605 kHz
Sensitivity	370 μV/m (S/N 20 dB), 20 μV (IHF, ext. Antenna)
Image rejection	50 dB
IF rejection	42 dB
Selectivity (IHF)	34 dB
Signal-to-noise ratio	50 dB
Antenna	Ferrite antenna and Separate terminal

• AUDIO SECTION

Output

RMS power

(Both channel driven)

50 watts per channel, min. RMS, at 8 ohms from 20 Hz to 20 kHz, with no more than 0.09% total harmonic distortion.

	60 W + 60 W (8 ohms, 1 kHz, T.H.D. 0.09%)
	65 W + 65 W (4 ohms, 1 kHz, T.H.D. 0.1%)
Non-clipped transient power	100 W + 100 W (8 ohms, 1 kHz, T.H.D. 0.09%)
Power bandwidth	10 Hz – 40 kHz (1/2 RMS power, T.H.D. 0.09%)
Frequency characteristics	10 Hz – 30 kHz (+0, –1 dB), 10 Hz – 40 kHz (+0, –2 dB)
Harmonic distortion	
(at rated output)	Less than 0.09%
(at 1/2 rated output)	Less than 0.05%
Intermodulation distortion	
(at rated output)	0.1%
(at 1/2 rated output)	0.05%

STEREO RECEIVER

August 1980

www.hifiengine.com

Input sensitivity (at 50 W output, 1 kHz)	
PHONO	2.5 mV (47 k ohms)
AUX	150 mV (33 k ohms)
TAPE-1	150 mV (38 k ohms)
TAPE-2	150 mV (38 k ohms)
Max. input level (PHONO)	250 mV (T.H.D. 0.1% at 1 kHz)
Output level	
TAPE OUT	150 mV (PHONO, AUX at rated input)
	150 mV (FM 400 Hz, 30% mod. input: 1 mV)
	150 mV (AM 400 Hz, 30% mod. input: 5 mV/m)
Signal-to-noise ratio (IHF, A network, rated power)	
PHONO	75 dB
AUX	90 dB
TAPE	90 dB
Damping factor	40 (1 kHz, 8 ohms)
Equalizer	RIAA ± 1 dB
Bass control	±10 dB (100 Hz)
Treble control	±10 dB (10 kHz)
Loudness control	+9 dB (100 Hz), +4 dB (10 kHz)
Semi-conductors	1 FET, 10 ICs, 54 Transistors, 119 Diodes
Low filter	50 Hz -8 dB (6 dB/oct)
High filter	10 kHz -8 dB (6 dB/oct)
Mode	Mono, Stereo
FM Muting	Provided
Tape monitor	2
LED indicators	Signal 5 LEDs, Vector tuning 3 LEDs
Tuning meter	Power 24 LEDs (L and R), Class G (Dynaharmony) 1 LED
Speaker switch	A, B, A+B
AC outlet	1 (50 W switched)
Speaker terminal	One touch terminal
Power requirement	120 V, 60 Hz
Power consumption	195 W
Dimensions	460 (W) x 145 (H) x 360 (D) mm
	18-1/8 (W) x 5-3/4 (H) x 14-3/16 (D) in.
Weight	10.6 kg (23.3 lbs.)

Specifications and designs may be changed without notice for improvement.

CARACTERISTIQUES

• **SECTION FM**		
Bande de fréquences	88–108 MHz	
Sensibilité utilisable	Mono: 10,3 dBf (1,8 μV)	Stéréo: 20 dBf (5,5 μV) Entre parenthèses: IHF '58
Seuil de sensibilité 50 dB	Mono: 17 dBf (3,9 μV)	Stéréo: 37 dBf (39 μV)
Rapport signal/bruit (65 dBf)	Mono: 74 dB	Stéréo: 68 dB
Distorsion harmonique (65 dBf)		
100 Hz	Mono: 0,2%	Stéréo: 0,3%
1 kHz	Mono: 0,15%	Stéréo: 0,25%
6 kHz	Mono: 0,25%	Stéréo: 0,3%
Réponse en fréquence	30 Hz–12 kHz (±0,5 dB)	
Rapport de sélectivité	90 MHz: 56 dB, 98 MHz: 50 dB, 106 MHz: 45 dB	
Rapport de réception non sélective	80 dB	
Taux de réponse FI	80 dB	
Sélectivité du canal de rechange	70 dB	
Rapport de captage	1 dB	
Suppression AM	55 dB	
Séparation stéréo	45 dB (1 kHz)	
Filtrage de la sous-porteuse	50 dB	
Réjection SCA	65 dB	
Seuil de sourdine	20 dBf (5,5 μV)	
Entrée de l'antenne	300 ohms pondérés	
• **SECTION AM**		
Bande de fréquence	530–1 605 kHz	
Sensibilité	370 μV/m (S/B 20 dB), 20 μV (Antenne ext., IHF)	
Rejet image	50 dB	
Rejet FI	42 dB	
Sélectivité (IHF)	34 dB	
Rapport signal/bruit	50 dB	
Antenne	Antenne de ferrite et borne séparée	
• **SECTION AUDIO**		
Sortie		
Puissance nominale	50 W + 50 W (8 ohms, 20 Hz–20 kHz, D.H.T. 0,09%)	
(Les deux canaux en	60 W + 60 W (8 ohms, 1 kHz, D.H.T. 0,1%)	
fonctionnement)	65 W + 65 W (4 ohms, 1 kHz, D.H.T. 0,09%)	
Réponse instantanée nette	100 W + 100 W (8 ohms, 1 kHz, D.H.T. 0,09%)	
Bande passante	10 Hz–40 kHz (1/2 puissance normale, D.H.T. 0,1%)	
Courbe de fréquence	10 Hz–30 kHz (+0, -1 dB), 10 Hz–40 kHz (+0, -2 dB)	
Distorsion harmonique		
(à la puissance réelle)	0,09%	
(à la moitié de la puissance réelle)	0,05%	

www.hifiengine.com

Distorsion d'intermodulation	
(à la puissance réelle)	0,1%
(à la moitié de la puissance réelle)	0,05%
Sensibilité d'entrée	
(sous 50 W, 1 kHz de sortie)	
PHONO	2,5 mV (47 k ohms)
AUX	150 mV (33 k ohms)
TAPE-1	150 mV (38 k ohms)
TAPE-2	150 mV (38 k ohms)
Niveau d'entrée maximum (PHONO)	250 mV (avec une D.H.T. de 0,1% à 1 kHz)
Niveau de sortie	
TAPE OUT	150 mV (PHONO, AUX à l'entrée nominale)
	150 mV (FM 400 Hz, 30% d'entrée mod. : 1 mV)
	150 mV (AM 400 Hz, 30% d'entrée mod.: 5 mV/m)
Rapport signal/bruit	
(IHF, réseau A, puissance nominale)	
PHONO	75 dB
AUX	90 dB
TAPE	90 dB
Facteur d'atténuation	40 (1 kHz, 8 ohms)
Compensateur	RIAA ± 1 dB
Commande des graves	±10 dB (100 Hz)
Commande des aigus	±10 dB (10 kHz)
Correction sonore physiologique	+9 dB (100 Hz), +4 dB (10 kHz)
Semi-conducteur	FET: 1, CI: 10, Transistors; 54, Diodes: 119
Filtre bas	50 Hz, -8 dB (6 dB/oct)
Filtre haut	10 kHz, -8 dB (6 dB/oct)
Mode	Mono, Stéréo
Sonorité FM	Incorporé
Contrôle de bande	2
LED indicatrices	Signal 5 LEDs, accord vectoriel 3 LEDs, puissance 24 LEDs (gauche et droite), classe G (Dynaharmony) 1 LED
Interrupteur d'enceintes	A, B, A+B
Sortie C.A.	1 (50 W, commutable)
Bornes d'enceinte	Borne à une touche
Alimentation	Secteur 120 V 60 Hz
Consommation	195 W
Dimensions	460 (L) x 145 (H) x 360 (P) mm (18-1/8" x 5-3/4" x 14-3/16")
Poids	10,6 kg (23,3 lbs.)

Les caractéristiques techniques et la présentation peuvent être modifiées sans préavis pour des raisons d'améliorations.

IMPOPTANT NOTICES

(1) When measuring the power output or listening to program source with the 4-OHMS load impedance, do not drive the Model SR-8010 at full power for a long period of time.

(2) When using the model with a continuous output of over 100 watts, the protection indicator will light up and the sound will sometimes be interrupted. This does not indicate a breakdown. In such cases, turn off the power, turn down the volume level and then wait 30 seconds before switching the power back on again.

NOTE: When the impedance of speakers is 8 ohms, the level of the indicators expresses the power output in watts. When the impedance of the speakers is only 4 ohms, the actual output is double the value indicated by the indicators.

(3) The Model SR-8010 has two types of electronic protection circuits; a shut-down circuit and current limiter circuit. If the shut-down circuit is actuated, the output of the amplifier is cut off. When only the current limiter circuit is actuated, the operation of the power amplifier is not shut down.

(4) A tape deck being used may be susceptible to induction from the receiver, although this depends on the type of tape deck, and there may be a hum sound. In such cases, install the tape deck in a location where it will not be susceptible to the induction. (For instance, place the tape deck on the right of the receiver when viwed from the front).
Do not place the tape deck on top nor on the left of the receiver since this will impair the receiver's performance.

AVERTISSEMENTS IMPORTANT

(1) Quand on mesure la puissance en sortie ou que l'on écoute des sources de programmes avec l'impédance de charge de 4-OHMS, ne pas faire fonctionner le modèle SR-8010 à pleine puissance pendant une longue période de temps.

(2) Quand on utilise cet appareil avec un débit continuel de puissance dépassant 100 watts, le voyant de protection peut s'allumer et le son peut quelquefois s'interrompre. Ceci ne veut pas dire qu'il y ait une panne. Dans de tels cas, couper l'alimentation, baisser le niveau du son, et puis atendre environ 30 secondes avant de réalimenter l'appareil.

NOTE: Lorsque l'impédance des enceintes est de 8 ohms, le niveau des indicateurs indique la puissance de sortie en watts. Lorsque l'impédance des enceintes n'est que de 4 ohms, la sortie réelle est double de la valeur indiquée par les indicateurs.

(3) Le modèle SR-8010 est équipé de deux types de circuits de protection électronique; un circuit d'arrêt total et un circuit de limitation de courant. Dand le cas où le circuit de coupure totale est activé, la sortie de l'amplificateur continue à fonctionner.

(4) Une platine de magnétophone en fonctionnement est susceptible d'être induite par le récepteur, bien que cela dépende du type de platine de magnétophone utilisé, et, de ce fait un certain ronflement peut apparître. Dans de tels cas, installer la platine de magnétophone dans un endroit où elle ne sera pas susceptible d'être induite. (Par exemple, installer la platine à droite du récepteur quand on les regarde de face.)
Ne pas placer la platine de magnétophone sur ou à gauche du récepteur car cela pourrait affecter les performances du récepteur.

www.hifiengine.com

DISASSEMBLY AND REPLACEMENT·DEMONTAGE ET REMONTAGE

- **Removing the top cover, front panel & bottom plate**
- **Déposer le couvercle supérieur, le panneau frontal et la plaque inférieure**

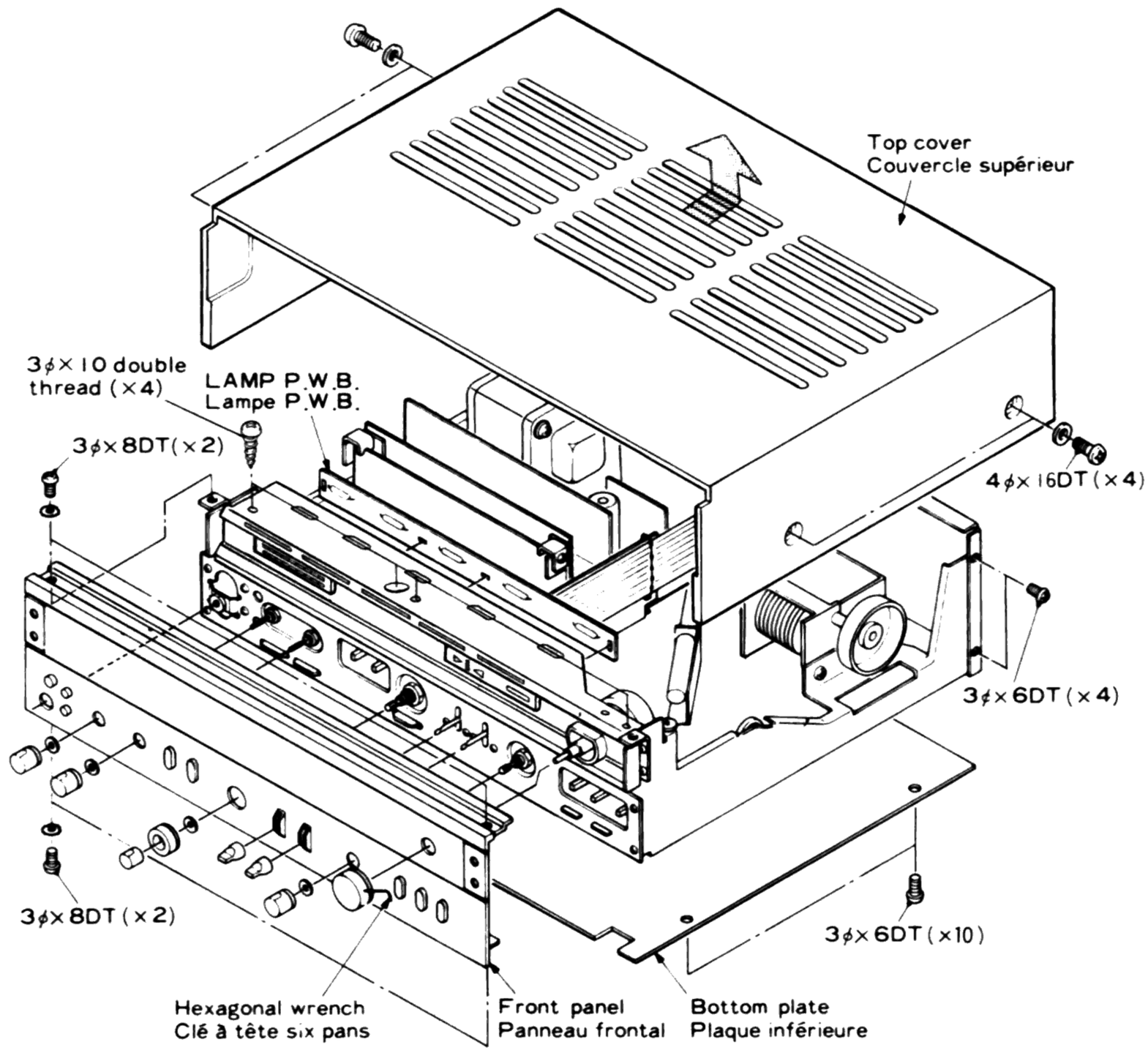

Fig. 1

- **Removing the printed wiring boards and output transistors**
- **Déposer des plaquettes à circuit imprimé et transistors de sortie**

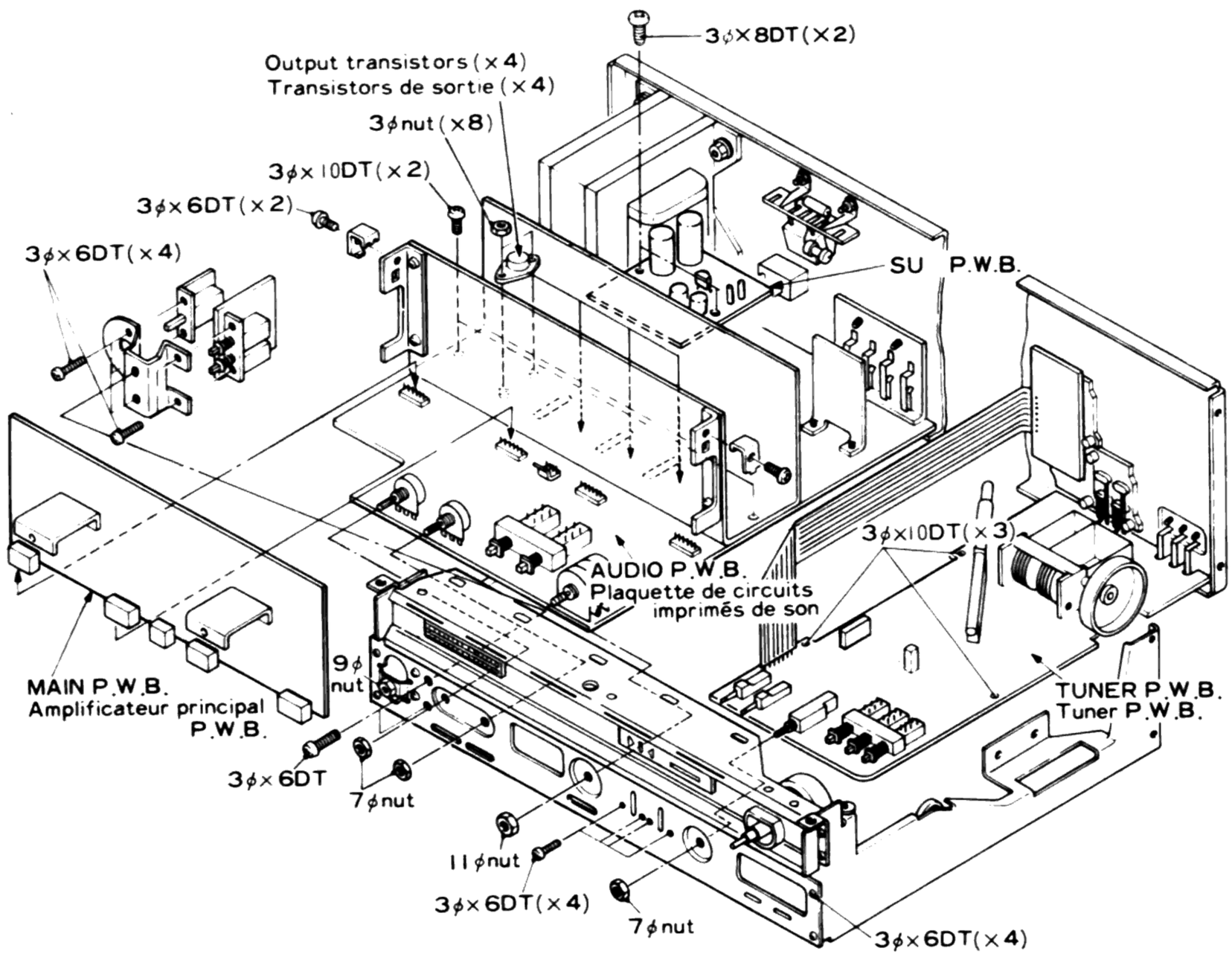

Fig. 2

www.hifiengine.com

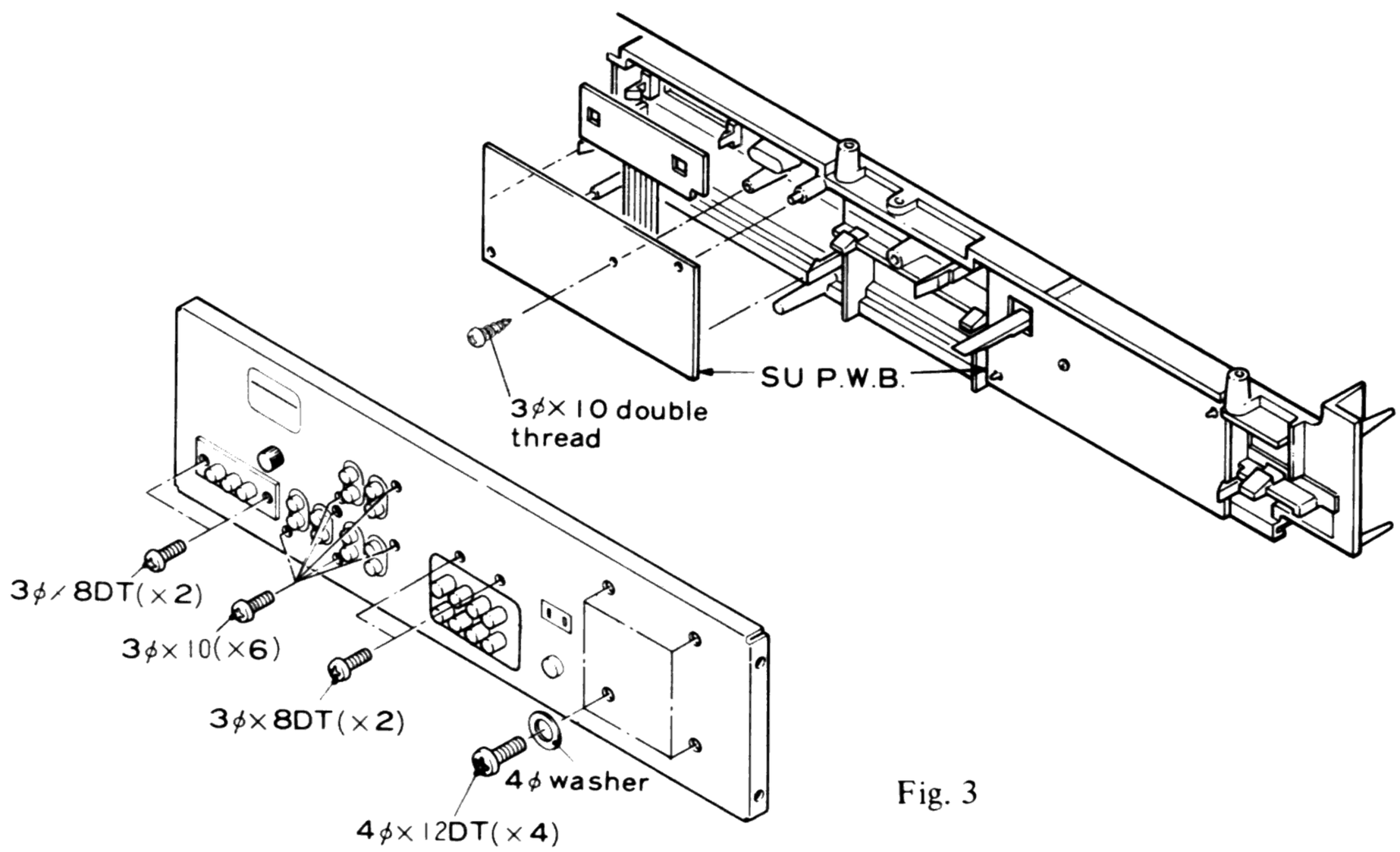

Fig. 3

DIAL CORD SETTING·EQUIPEMENT DE CADRAN

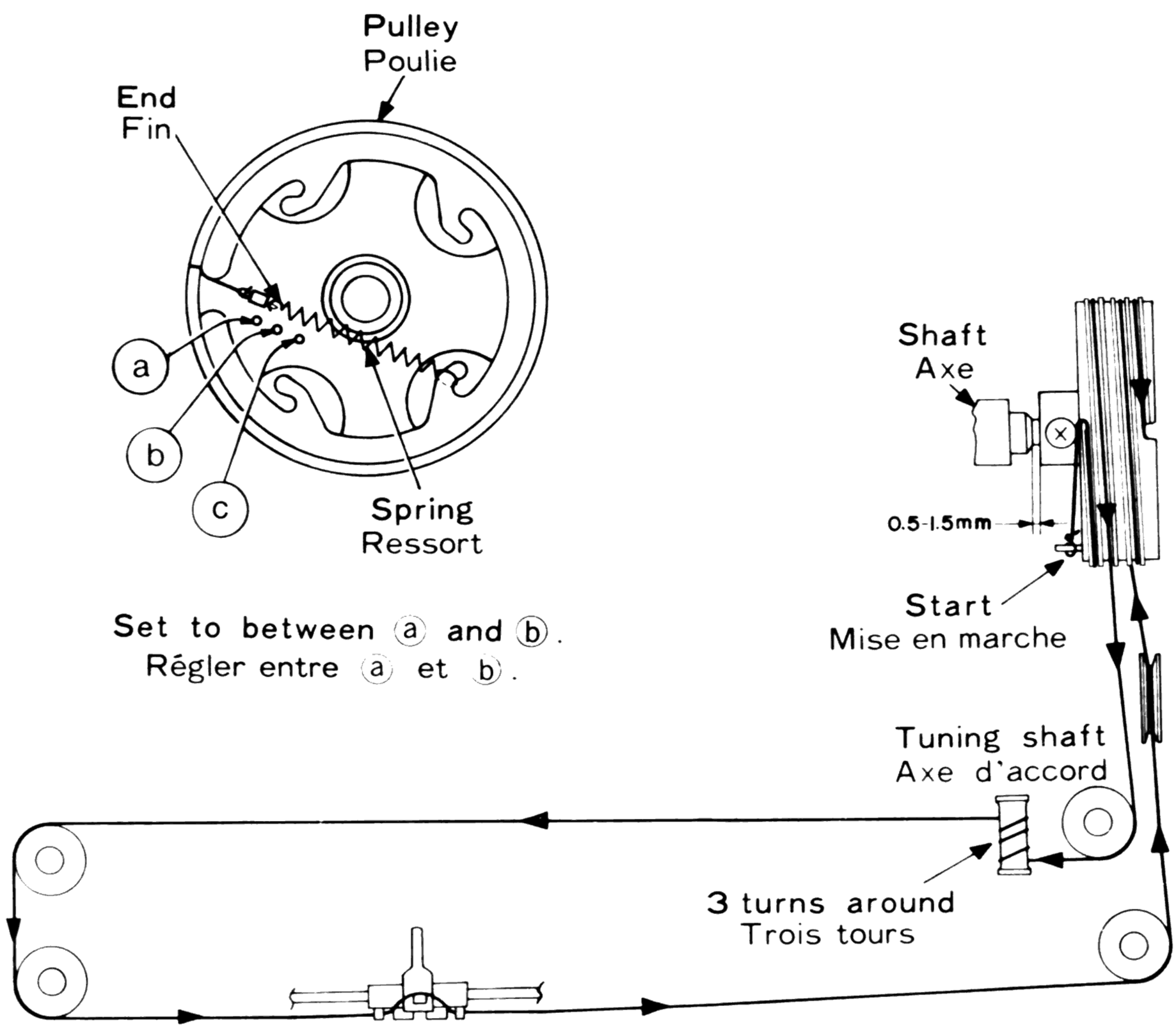

Fig. 4

www.hifiengine.com

GENERAL ALIGNMENT INSTRUCTION·INSTRUCTION GENERALE
TUNER P.W.B.

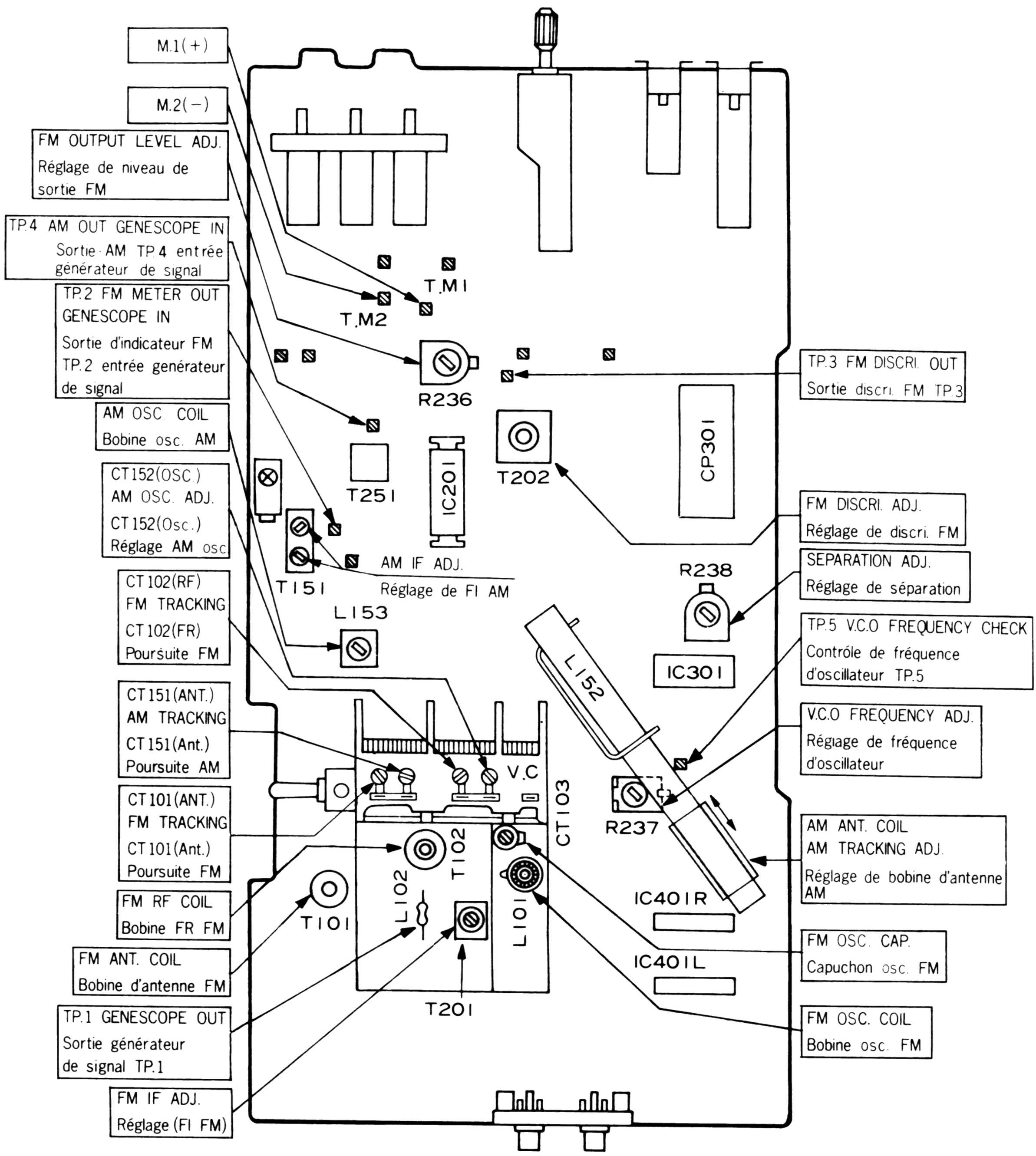

Fig. 5

www.hifiengine.com

FM TUNER ALIGNMENT·REGLAGE DE TUNER FM

Condition
Conditions

Function : FM
Volume : Minimum
Modulation : 400Hz 100 %
(unless otherwise notified)

FM Muting : OFF

Fonction : FM
Volume : au minimum
Modulation : 400Hz 100% (a moins qu'il en soit specifie autrement).

Réglage silencieux FM : OFF

Sweep Generator
Générateur de balayage

Signal Generator
Générateur de signaux

Oscilloscope
Oscilloscope

DC Balance Meter
Indicateur d'équilibrage à C.C.

VTVM
Voltmètre electronique

Frequency Counter
Frequencemetre

Dist.
Distortion Meter
Distorsionmètre

Sequence Ordre		Connection Connexion: Input Entrée	Connection Connexion: Output Sortie	Setting Montage: Tuning Indicateur d'accord	Setting Montage: Signal Signal	Adjust for Reglage pour: Adjust Reglage	Adjust for Reglage pour: Indication Indication
1	IF Amp. Amplificateur de frequence intermediaire	TP1 out sortie 1K	in entrée TP. 2 100K 0. 1µ		10. 7 MHz	T201	MAX.
2	"S" curve Courbe S		in entrée TP. 3 100K 0. 1 µ		10. 7 MHz	T202 lower: "S" curve upper : Straight line inférieure : courbe "S" supérieure : ligne droite	Straight line Ligne droite
3	Covering Guipage	ANT. Terminal Borne d'antenne	REC out or SP out Sortie d'enregistrement ou sortie haut-parleur	88MHz	88MHz	L101	V max.
				108MHz	108MHz	CT 103	
							Repeat 3
4	Tracking Alignement			90MHz	90MHz	T 101 ,102	V max.
				106MHz	106MHz	CT 101,102	
							Repeat 4
5	Discri. Discriminateur		REC out or SP out Sortie d'enregistrement ou sortie haut-parleur Dist.	98MHz	98MHz	T202 (lower) (inférieure)	T.M1 (+) T.M2 (-) 0 V±30 mV
6	Distortion Distorsion					T202 (upper) (supérieure)	Distortion min. CAUTION (1) Distorsion minimum ATTENTION(1)
7	Output Sortie	400Hz 30% Mod. Modulation	REC out Sortie d'enregistrement	98MHz	98MHz		
				98MHz	98MHz	R236	150mV ± 1dB
8	76kHz	Non-modulated Sans modulation	TP. 5	98MHz	98MHz	R237	Freq. Fréquence 76kHz±100Hz
9	Separation Séparation	Rch 400Hz 46% Mod. Canal droit : 400Hz 46% de modulation Pilot 8% Mod. Signal pilote 8% de modulation	REC out SP out Sortie d'enregistrement 13. 6kHz L. P. F.	98MHz	98MHz	R238	Lch out MIN CAUTION (2) Sortie canal gauche Min. Attention (2)

www.hifiengine.com

CAUTION

1. As the result of the adjustment step 6, the best point of adjustment from step 5 will be shifted a bit. Repeat the adjustment of step 5 and 6 until the deterioration becomes minimum and the pointer of tuning meter is in its center.
2. Optimize R238 so that the leak level of the L ch signal is equal to that of the R ch signal.

ATTENTION

1. A la suite du réglage décrite en 6, le meilleur réglage décrit en 5 sera légèrement décalé. Renouveler les réglages 5 et 6 jusqu'à ce que les détèriorations soient minimum et que l'aiguille de l'indicateur d'accord soit en position centrale.
2. Rendre R238 optimum pour que le niveau de crête du signal de canal gauche (L) soit égal à celui du canal droit (R).

AM TUNER ALIGNMENT·REGLAGE DE TUNER AM

Condition Function : AM Modulation : 400Hz 30%

Conditions Fonction : AM Modulation : 400Hz 30%

Sequence Ordre		Connection Connexion		Setting Montage		Adjust for Reglage pour	
		Input Entrée	Output Sortie	Tuning Indicateur d'accord	Signal Signal	Adjust Réglage	Indication Indication
1	IF Amp. Amplificateur de fréquence intèrmediaire	out sortie, 1K, CT151	TP. 4, 100k, 0.1μ, in entrée		455kHz	T151	MAX. CAUTION(1) ATTENTION(1)
2	Covering Guipage	Ferrite Antenna Antenne en ferrite	REC out or SP out Sortie d'enregistrement ou sortie haut-parleur	600kHz	600kHz	L153	V max. CAUTION (2) ATTENTION(2)
				1400kHz	1400kHz	CT152	
3	Tracking Alignement			600kHz	600kHz	L152 Ferrite Antenna Antenne en ferrite	
				1400kHz	1400kHz	CT151	

CAUTION

1. In step 1, set the capacitance of the variable capacitor to minimum and adjust red and blue cores of T151 so that the wave form is as shown in Fig. 6. As T151 contains a 455 kHz ceramic filter, sometimes the center of the marker will not correspond to that of the wave form.
   In this case, neglect the marker. After adjusting as above, increase the output level of the sweep generator and adjust T151 again so that the top of the wave form A (indicated in Fig. 7) will be flat and wide.
2. In carrying out adjustment described in step 2 and 3, repeat the adjustment so that the output at 600 kHz and 1400 kHz become maximum.

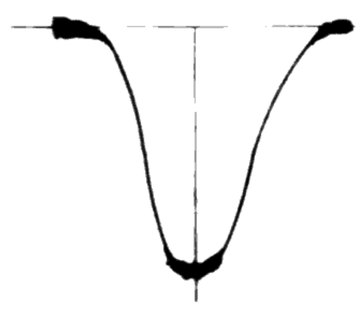

Fig. 6

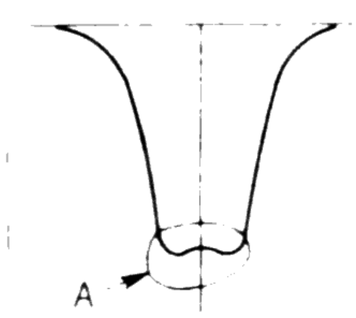

Fig. 7

ATTENTION

1. Dans le point 1, régler la capacitance du condensateur variable sur la position minimum et ajuster les noyaux rouge et bleu de T151 pour que la forme d'onde soit identique à celle indiquèe sur l'illustration (Fig. 6). Etant donné que T151 contient un filtre céramique de 455 kHz, il peut arriver que le centre de l'indicateur ne corresponde pas à la forme d'onde.
   Si le cas se présente, ne pas tenir compte de la position de l'indicateur. Après avoir effectué les réglages cidessus, augmenter le niveau de sortie à l'aide d'un générateur de balayage et ajuster T151 une nouvelle fois pour que le haut de la forme d'onde A (illustrée par la Fig. 7) soit plate et large.
2. En effectuant le réglage décrit en 2 et 3, répéter le réglage pour que la sortie à 600 kHz et 1400 kHz soit maximale.

www.hifiengine.com

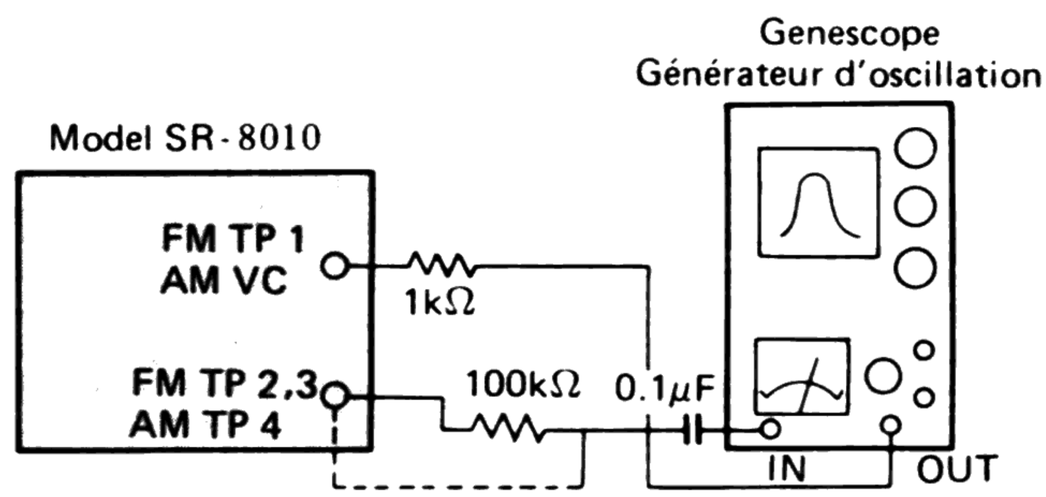

Fig. 8 FM IF Discriminator and AM IF alignments (FM: Step. 1,2 AM: Step. 1)
Réglages de discriminateur FM IF et AM IF (Operations 1.2 FM et 1 AM)

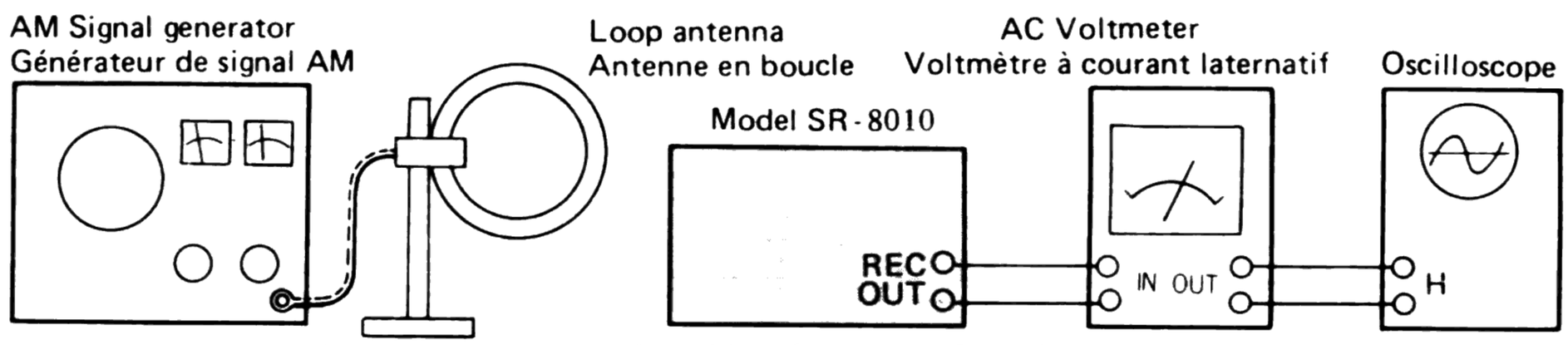

Fig. 9 AM frequency covering and tracking alignments (Step. 2 and 3)
Réglages de poursuite et d'étendue de fréquence AM (Operations 2 et 3)

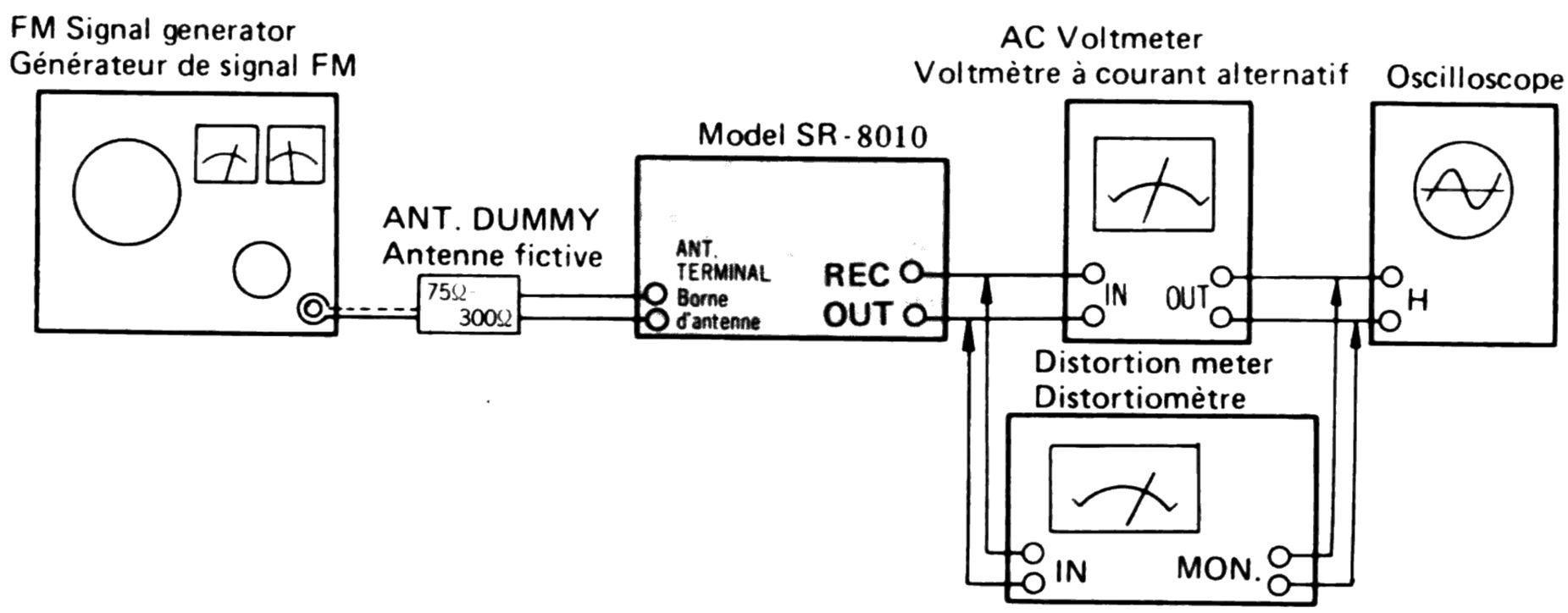

Fig. 10 FM frequency covering, tracking and other alignments (Step. 3 to 7)
Réglages de poursuite, d'étendue de fréquence FM et autres (Operations 3 ä 7)

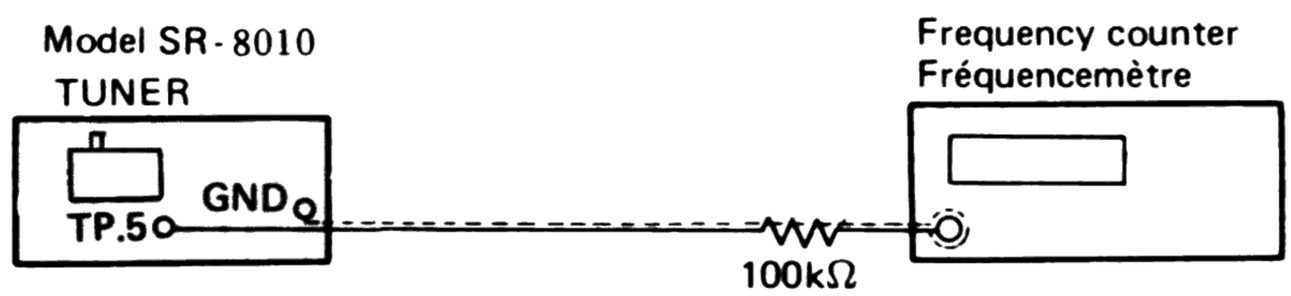

Fig. 11 FM MPX 76 kHz adjustment (Step. 8)
Réglage de 76kHz MPX FM (Operation 8)

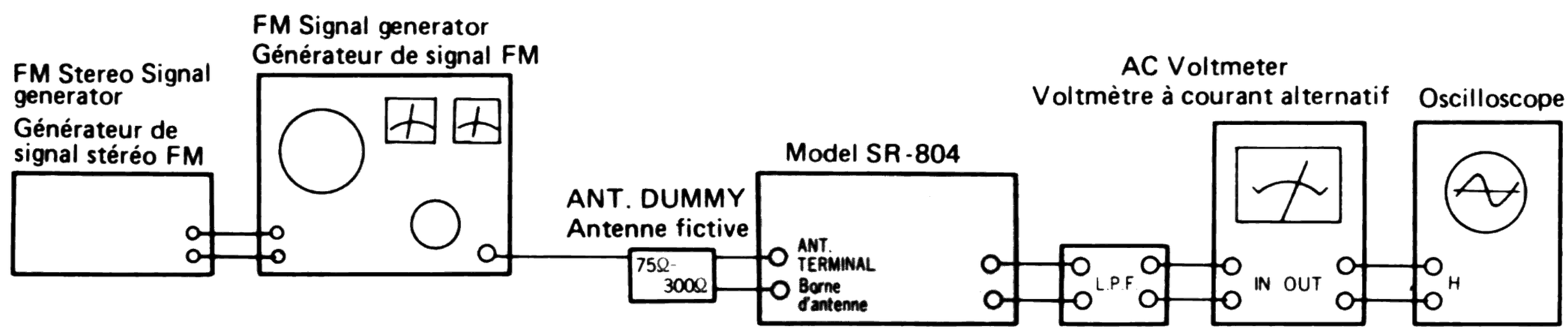

Fig. 12 FM MPX algnments (Step. 9)
Réglage de MPX FM (Operation 9)

www.hifiengine.com

AUDIO CIRCUIT ALIGNMENT · REGLAGE DE CIRCUIT DE SON

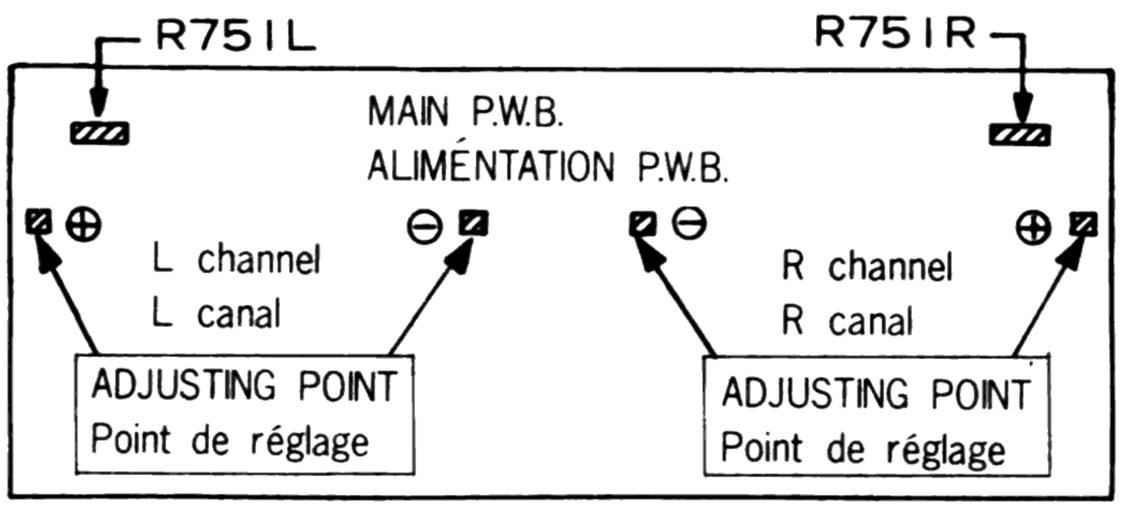

Fig. 13

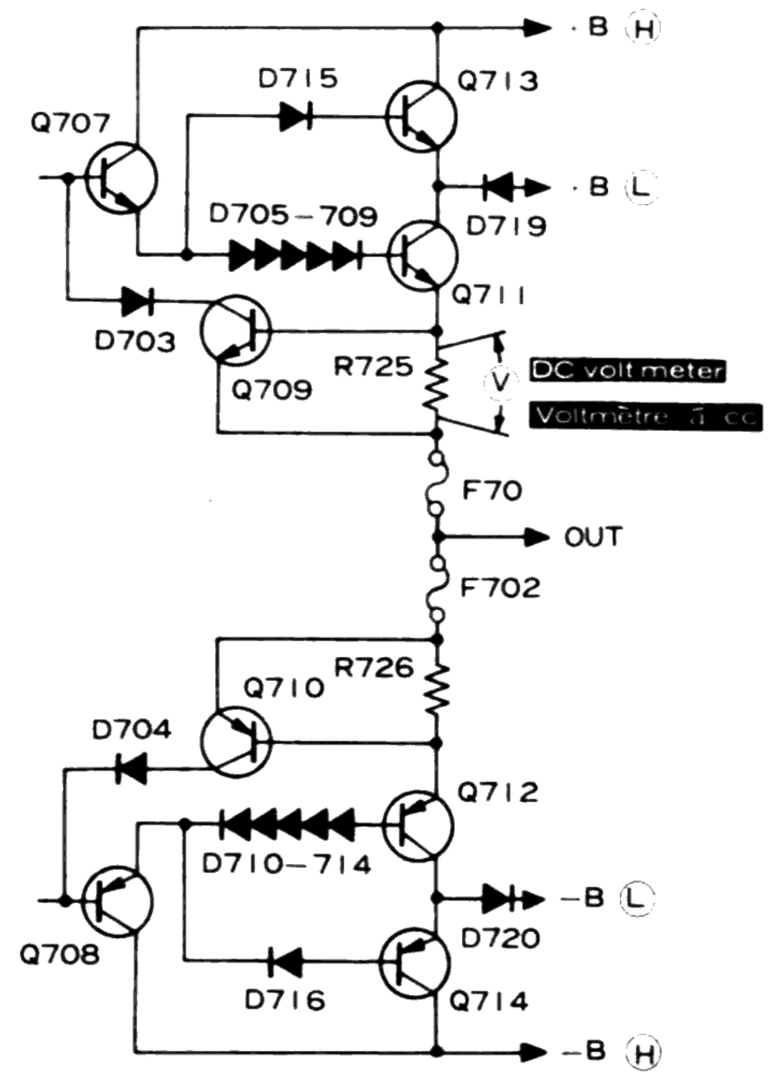

Fig. 14

Test conditions
FUNCTION . . . . . Free
VOLUME . . . . . Minimum

Item	Measuring instrument	Point to be measured	Adjust	Value adjusted
Idle current	DC voltmeter	Fig. 13	R751 L,R	11mV ± 4.4mV (50mA ± 20mA)

Conditions pour les essais
FUNCTION . . . . . Libre
VOLUME . . . . . Minimal

Désignation	Appareil de mesure	Point de mesure	Réglage	Valeur adjustée
Courant déwatté	Voltmètre à D.C.	Fig. 13	R751 L,R	11mV ± 4,4mV (50mA ± 20mA)

BLOCK DIAGRAM · SCHEMA

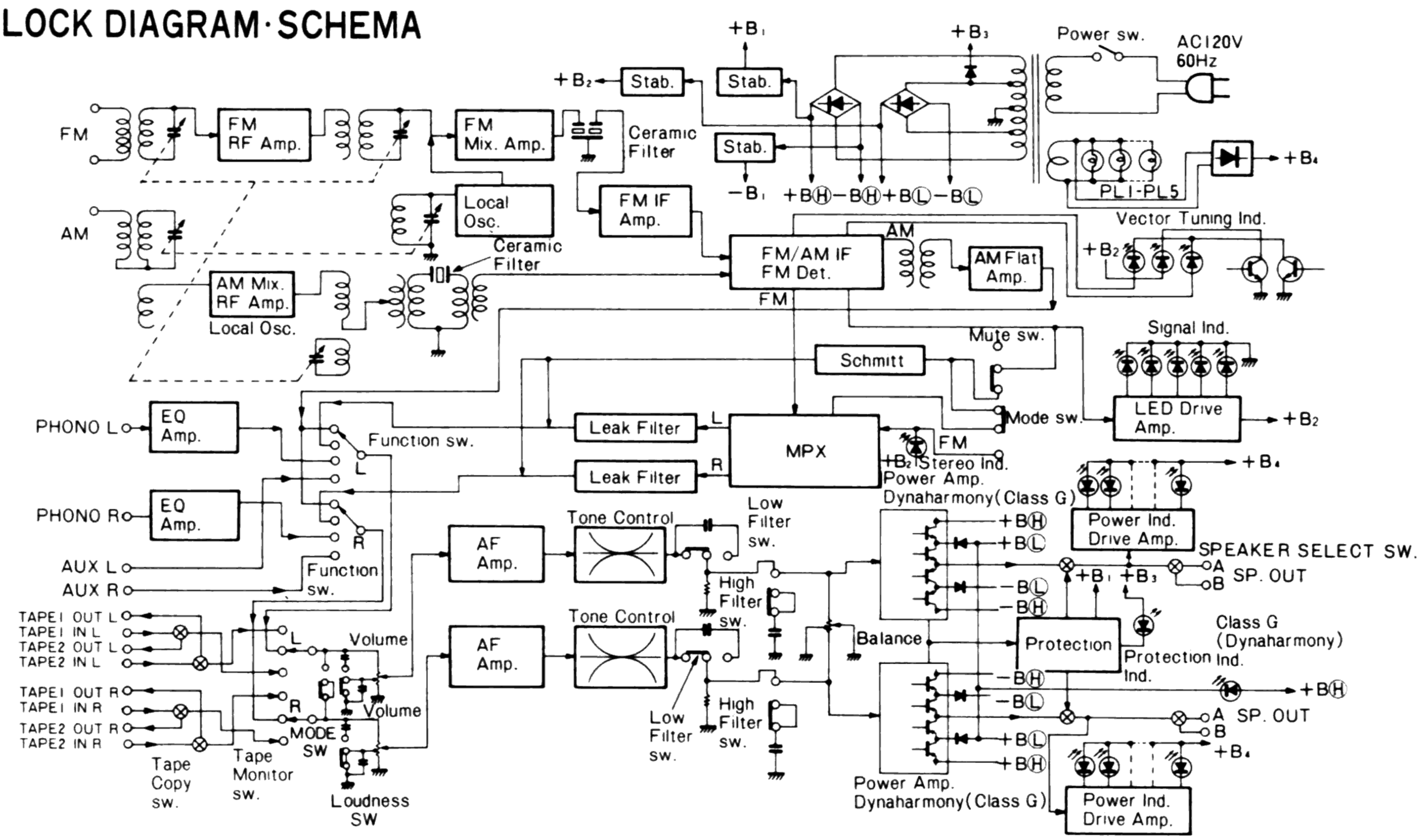

www.hifiengine.com

CIRCUIT DIAGRAM·PLAN DE CIRCUIT

CAUTION: Fuse resistors are used to improve safety (to protect the circuit). When replacing them with new ones, be sure to use the designated type. Always use the designated fuse without fail.

ATTENTION: Les résistance à fusible sont faites pour améliorer la sécurité de l'appareil (protection de circuit). Pour les remplacer, utiliser le même type. Utiliser toujours le modèle de fusible spécifié pour effectuer le remplacement.

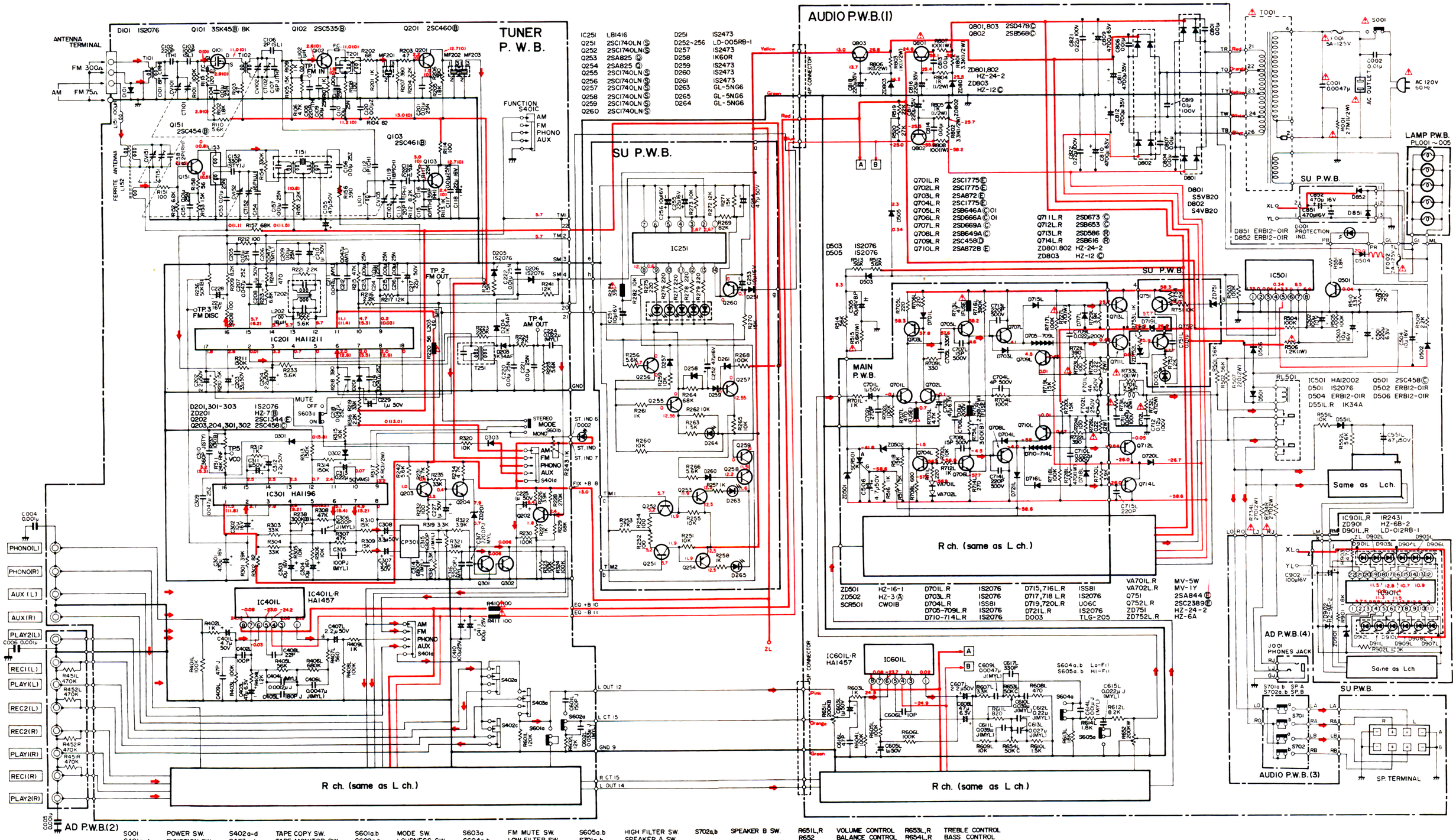

The circuit diagram is subject to change for improvement without notice.
Le schéma de montage est sujet à modification sans préavis, pour des raisons d'amélioration.

PRINTED WIRING BOARD·PLAN DE BASE

[: +B, : −B, : Earth, : Other]

The circuit symbol (▬) means a fuse resistor. When replacing it with new one, refer to the CAUTION on page 11.

Le symbole de circuit (▬) signifie qu'il s'agit d'une résistance à fusible. Consulter les instructions "ATTENTION" de la page 11 pour effectuer son remplacement.

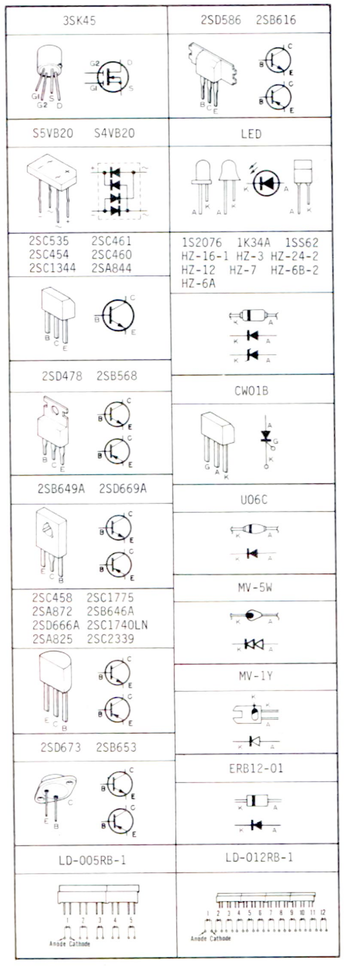

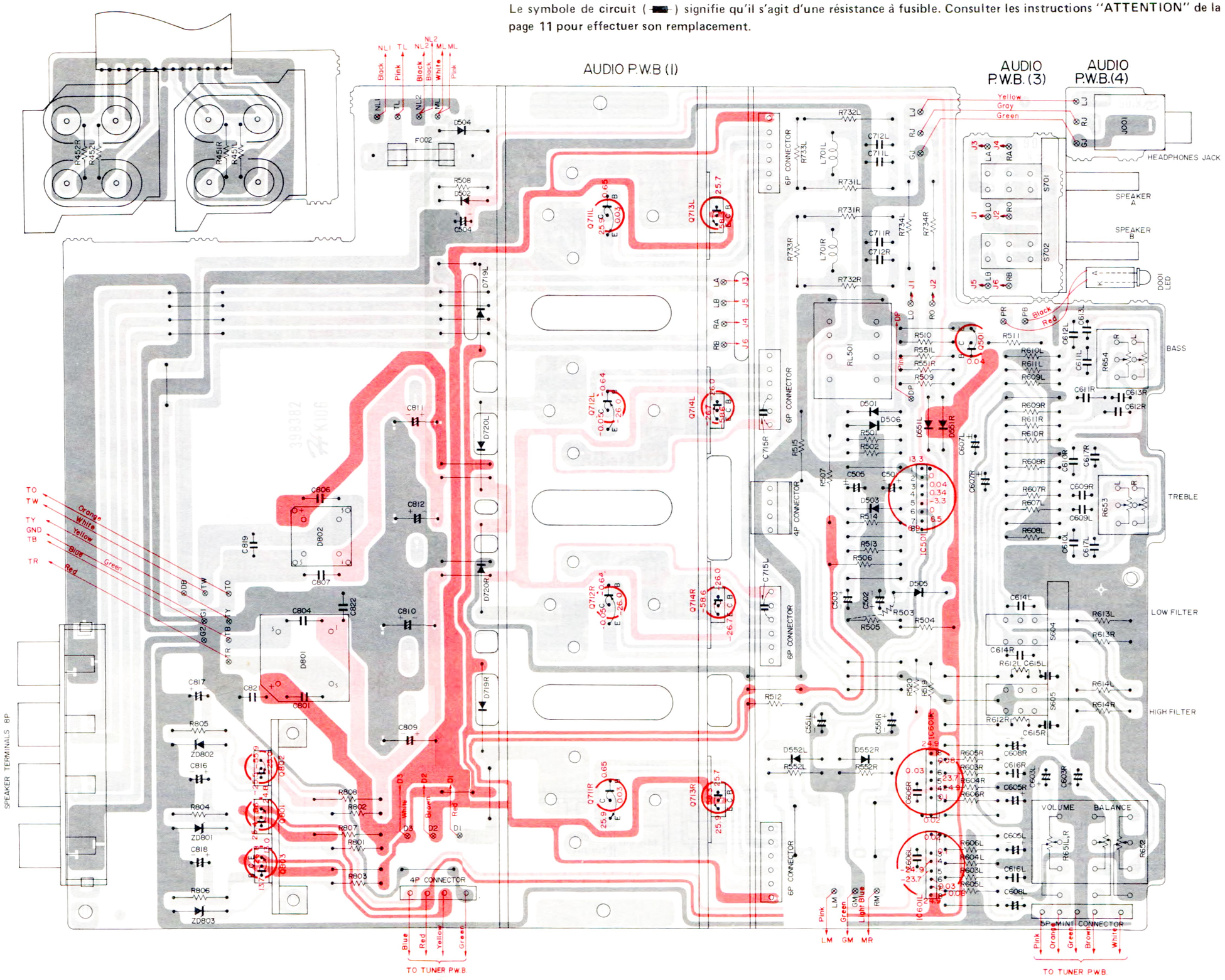

The terminal No. shows the stamp on the printed wiring board. This number matches the number in the circuit diagram.

Le N° de borne correspond à l'indication de la plaquette à circuit imprimé. Ce numéro correspond au numéro du schéma de montage.

PRINTED WIRING BOARD·PLAN DE BASE [: +B, : −B, : Earth, : Other]

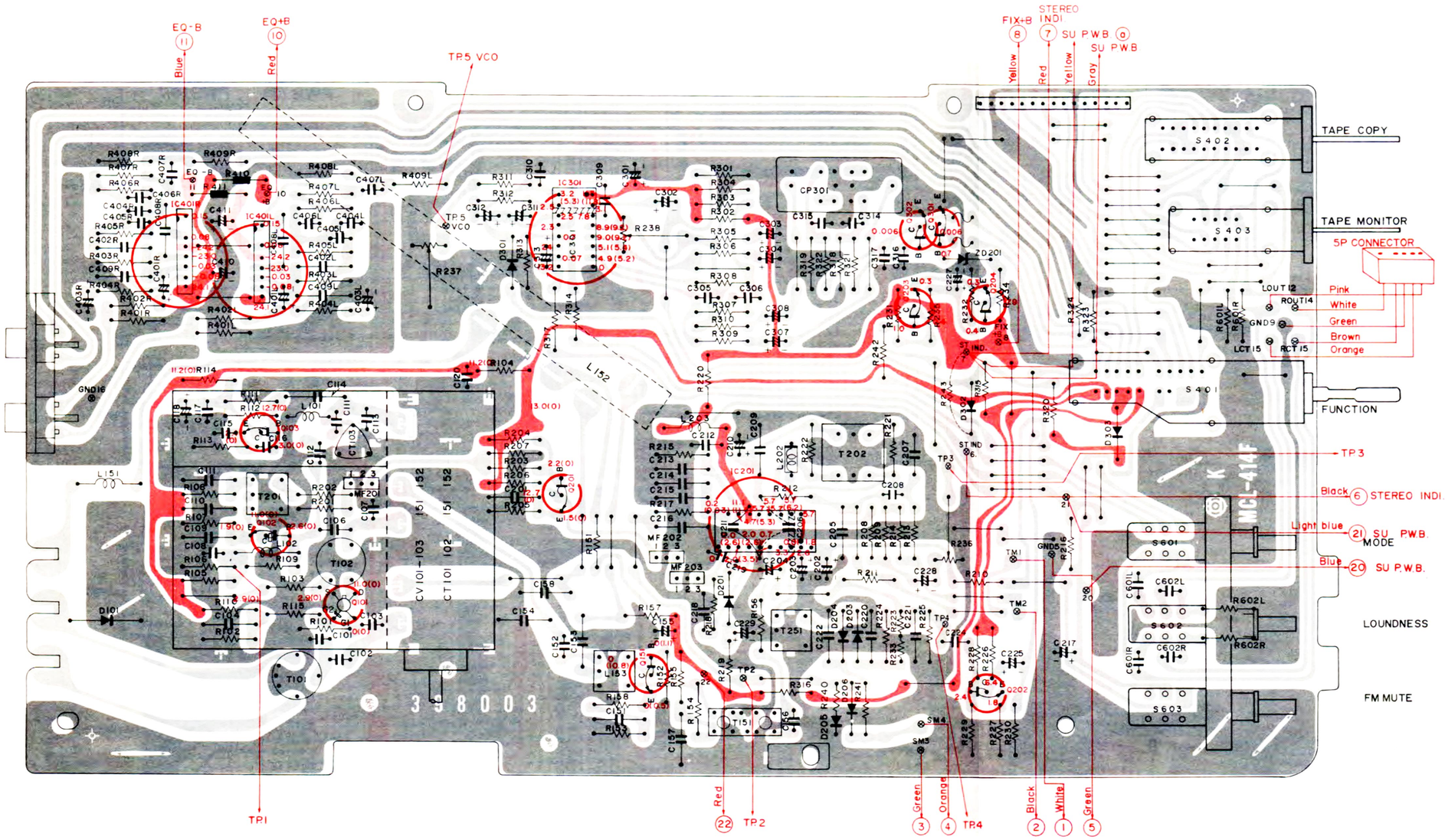

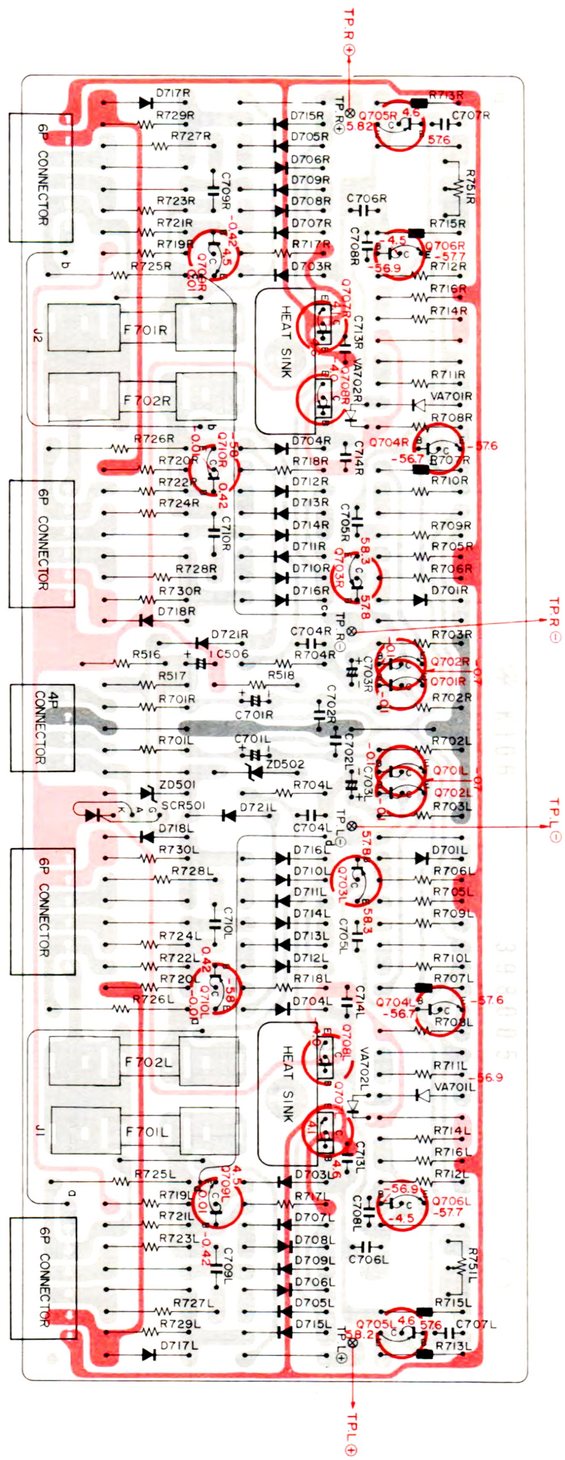

HA11211

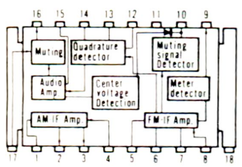

HA1196

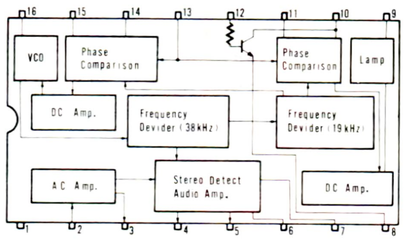

HA1457

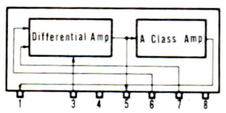

HA12002

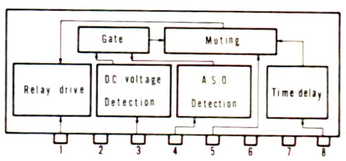

LB1416

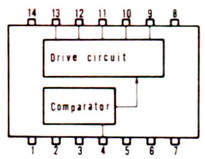

IR2431

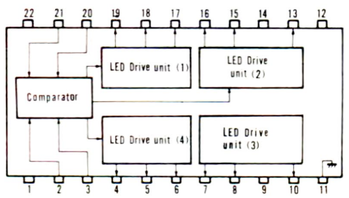

The circuit symbol (▬) means a fuse resistor. When replacing it with new one, refer to the CAUTION on page 11.

Le symbole de circuit (▬) signifie qu'il s'agit d'une résistance à fusible. Consulter les instructions "ATTENTION" de la page 11 pour effectuer son remplacement.

The terminal No. shows the stamp on the printed wiring board. This number matches the number in the circuit diagram.

Le N° de borne correspond à l'indication de la plaquette à circuit imprimé. Ce numéro correspond au numéro du schéma de montage.

PRINTED WIRING BOARD·PLAN DE BASE

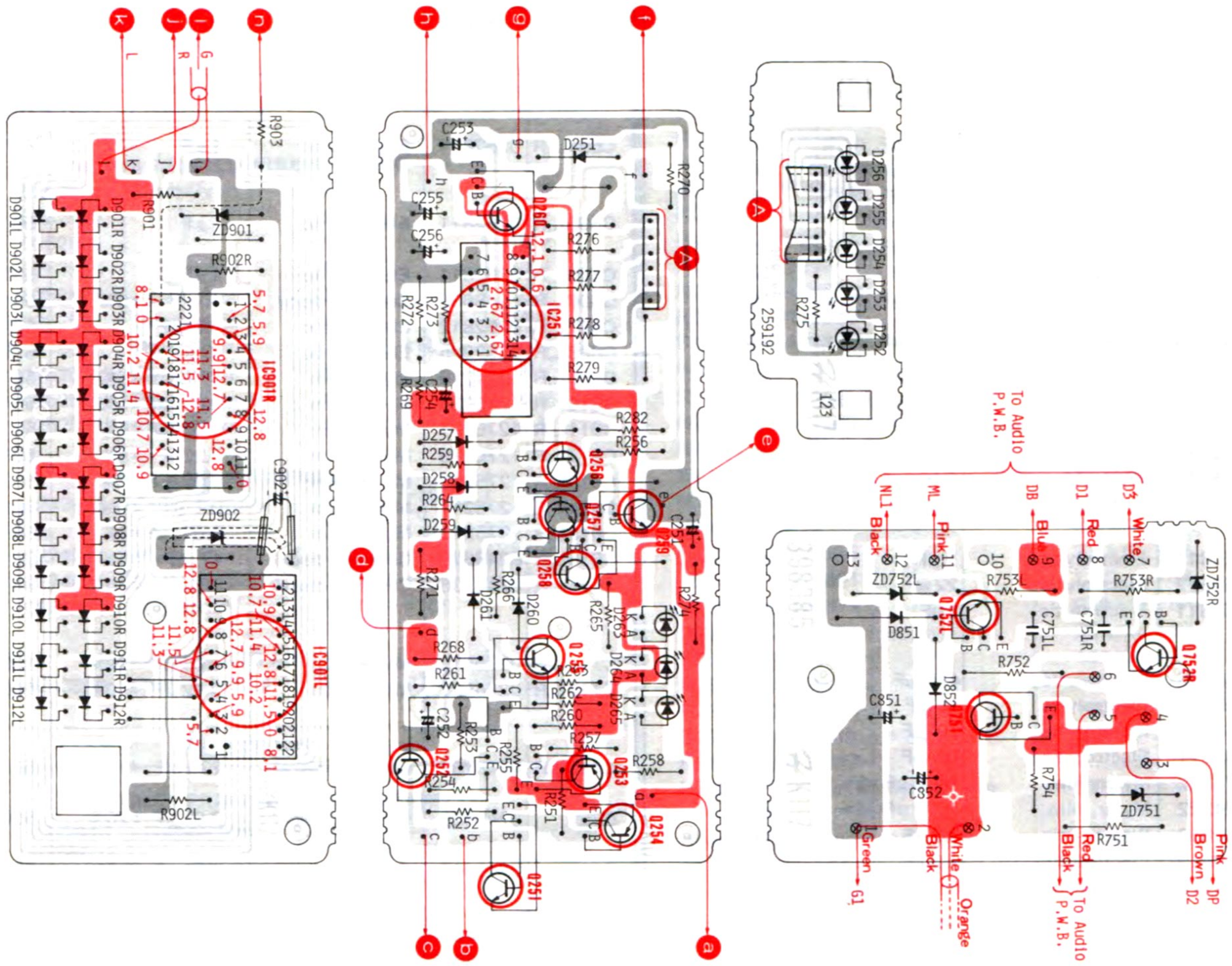

REPLACEMENT PARTS LIST·TABLEAU DES PIECE

SYMBOL NO.	STOCK NO.	DESCRIPTION		
CAPACITORS				
for TUNER PRINTED WIRING BOARD				
C101	0248008	Ceramic, discal	8 pF ±0.25 pF	50 V
C102	0248362	Ceramic, discal	220 pF ±5%	50 V
C103	0248684	Ceramic, discal	100 pF ±5%	50 V
C104	H240106	Cylindrical ceramic	0.01 μF ±30%	25 V
C106	0248632	Ceramic, discal	2 pF ±0.25 pF	50 V
C107	0248335	Ceramic, discal	16 pF ±5%	50 V
C108	0248362	Ceramic, discal	220 pF ±5%	50 V
C109	H240106	Cylindrical ceramic	0.01 μF ±30%	25 V
~	~	~	~	~
C111	H240106	Cylindrical ceramic	0.01 μF ±30%	25 V
C112	0246411	Ceramic, discal	1 pF ±0.25 pF	50 V
C113	0246707	Ceramic, discal	20 pF ±5%	50 V
C114	0246448	Ceramic, discal	22 pF ±5%	50 V
C115	0248310	Ceramic, discal	10 pF ±5%	50 V
C116	0248044	Ceramic, discal	39 pF ±5%	50 V
C117	0245017	Ceramic, discal	0.01 μF +80% -20	25 V
C118	0252522	Electrolytic	22 μF	16 V
C119	0246446	Ceramic, discal	18 pF ±5%	50 V

SYMBOL NO.	STOCK NO.	DESCRIPTION		
C120	0245017	Ceramic, discal	0.01 μF +80% -20	25 V
C151	H240106	Cylindrical ceramic	0.01 μF ±30%	25 V
C152	0228323	Styrol	330 pF ±5%	50 V
C153	H240106	Cylindrical ceramic	0.01 μF ±30%	25 V
C154	H230167	Cylindrical ceramic	16 pF ±5%	50 V
C155	0252815	Electrolytic	4.7 μF	50 V
C156	0245017	Ceramic, discal	0.01 μF +80% -20	25 V
C157	H240106	Cylindrical ceramic	0.01 μF ±30%	25 V
C158	H230111	Cylindrical ceramic	8.2 pF ±10%	50 V
C201	H240106	Cylindrical ceramic	0.01 μF ±30%	25 V
C202	0252812	Electrolytic	2.2 μF	50 V
C203	0252813	Electrolytic	3.3 μF	50 V
C204	0252811	Electrolytic	1 μF	50 V
C205	H240106	Cylindrical ceramic	0.01 μF ±30%	25 V
C206	0275015	Mylar, film	0.047 μF ±10%	50 V
C207	0244175	Ceramic, discal	0.047 μF +80% -20	25 V
C208	0252811	Electrolytic	1 μF	50 V

www.hifiengine.com

SYMBOL NO.	STOCK NO.	DESCRIPTION		
C209	H240106	Cylindrical ceramic	0.01 μF ±30%	25 V
C210	0252811	Electrolytic	1 μF	50 V
C211	0275015	Mylar, film	0.047μF ±10%	50 V
C212	0275015	Mylar, film	0.047μF ±10%	50 V
C213	H240106	Cylindrical ceramic	0.01 μF ±30%	25 V
~	~	~	~	~
C216	H240106	Cylindrical ceramic	0.01 μF ±30%	25 V
C217	0252812	Electrolytic	2.2 μF	50 V
C218	0244175	Ceramic, discal	0.047μF +80 -20 %	25 V
C219	0244175	Ceramic, discal	0.047μF +80 -20 %	25 V
C220	H240106	Cylindrical ceramic	0.01 μF ±30	25 V
C221	H240108	~	0.022μF ±30%	16 V
C222	H240106	Cylindrical ceramic	0.01 μF ±30%	25 V
C223	0252231	Electrolytic	100 μF	6.3 V
C224	0275013	Mylar, film	0.022μF ±10%	50 V
C225	0252811	Electrolytic	1 μF	50 V
C227	0252811	Electrolytic	1 μF	50 V
C228	0252522	Electrolytic	22 μF	16 V
C229	0252811	Electrolytic	1 μF	50 V
C301	0252535	Electrolytic	470 μF	16 V
C302	0252521	Electrolytic	10 μF	16 V
C303	0252521	Electrolytic	10 μF	16 V
C304	0252521	Electrolytic	10 μF	16 V
C305	1274222	Mylar, film	1600 pF ±5%	50 V
C306	1274222	Mylar, film	1600 pF ±5%	50 V
C307	0252813	Electrolytic	3.3 μF	50 V
C308	0252813	Electrolytic	3.3 μF	50 V
C309	0244175	Ceramic, discal	0.047μF +80 -20 %	25 V
C310	0221523	Styrol	360 pF ±5%	50 V
C311	0252811	Electrolytic	1 μF	50 V
C312	0252812	Electrolytic	2.2 μF	50 V
C313	0252873	Electrolytic	0.22 μF	50 V
C314	1274216	Mylar, film	6800 pF ±5%	50 V
C315	1274216	Mylar, film	6800 pF ±5%	50 V
C316	1274213	Mylar, film	2200 pF ±5%	50 V
C317	1274213	Mylar, film	2200 pF ±5%	50 V
C401L,R	0252815	Electrolytic	4.7 μF	50 V
C402L,R	H230036	Cylindrical ceramic	100 pF ±5%	50 V
C403L,R	0252225	Electrolytic	47 μF	6.3 V
C404L,R	1274231	Mylar, film	1200 pF ±5%	50 V
C405L,R	0248690	Ceramic, discal	180 pF ±5%	50 V
C406L,R	1274215	Mylar, film	4700 pF ±5%	50 V
C407L,R	0252812	Electrolytic	2.2 μF	50 V
C408L,R	H230020	Cylindrical ceramic	22 pF ±5%	50 V
C409L,R	H230028	Cylindrical ceramic	47 pF ±5%	50 V
C410	0252631	Electrolytic	100 μF	25 V
C411	0252631	Electrolytic	100 μF	25 V
C601L,R	0248688	Ceramic, discal	150 pF ±5%	50 V
C602L,R	1275214	Mylar, film	0.033 μF ±5%	50 V
for AUDIO PRINTED WIRING BOARD				
C501	0252232	Electrolytic	220 μF	6.3 V
C502	0252331	Electrolytic	100 μF	10 V
C503	0252521	Electrolytic	10 μF	16 V
C504	0252521	Electrolytic	10 μF	16 V

SYMBOL NO.	STOCK NO.	DESCRIPTION		
C505	0257145	Electrolytic	10 μF	16 V
C551L,R	0252811	Electrolytic	1 μF	50 V
C603L,R	0252811	Electrolytic	1 μF	50 V
C605L,R	0252811	Electrolytic	1 μF	50 V
C606L,R	0248650	Ceramic, discal	10 μF ±5%	50 V
C607L,R	0252812	Electrolytic	2.2 μF	50 V
C608L,R	0252225	Electrolytic	47 μF	6.3 V
C609L,R	1274215	Mylar, film	4700 pF ±5%	50 V
C610L,R	1275234	Mylar, film	0.039μF ±5%	50 V
C611L,R	1275234	Mylar, film	0.039μF ±5%	50 V
C612L,R	1276213	Mylar, film	0.22μF ±5%	50 V
C613L,R	1275233	Mylar, film	0.027μF ±5%	50 V
C614L,R	1276211	Mylar, film	0.1 μF ±5%	50 V
C615L,R	1275213	Mylar, film	0.022μF ±5%	50 V
C616L,R	0248676	Ceramic, discal	47 pF ±5%	50 V
C617L,R	0248736	Ceramic, discal	330 pF ±10%	50 V
C711L,R	0275515	Mylar, film	0.047μF ±10%	100 V
C712L,R	0276531	Mylar, film	0.12 μF ±10%	100 V
C715L,R	0248732	Ceramic, discal	220 pF ±10%	50 V
C801	0245408	Ceramic, discal	0.01 μF ±20%	500 V
C804	0245408	Ceramic, discal	0.01 μF ±20%	500 V
C806	0245408	Ceramic, discal	0.01 μF ±20%	500 V
C807	0245408	Ceramic, discal	0.01 μF ±20%	500 V
C809	0259975	Electrolytic	4700 μF	63 V
C810	0259975	Electrolytic	4700 μF	63 V
C811	0259945	Electrolytic	4700 μF	35 V
C812	0259945	Electrolytic	4700 μF	35 V
C816	0252732	Electrolytic	220 μF	35 V
C817	0252732	Electrolytic	220 μF	35 V
C818	0252731	Electrolytic	100 μF	35 V
C819	0276511	Mylar, film	0.1 μF ±10%	100 V
C821	0276513	Mylar, film	0.22μF ±10%	100 V
C822	0276513	Mylar, film	0.22μF ±10%	100 V
for MAIN PRINTED WIRING BOARD				
C506	0252815	Electrolytic	4.7 μF	50 V
C701L,R	0252811	Electrolytic	1 μF	50 V
C702L,R	0248694	Ceramic, discal	270 pF ±5%	50 V
C703L,R	0252225	Electrolytic	47 μF	6.3 V
C704L,R	0247804	Ceramic, discal	4 pF ±0.25 pF	500 V
C705L,R	0248736	Ceramic, discal	330 pF ±10%	50 V
C706L,R	0275711	Mylar, film	0.01 μF ±10%	200 V
C707L,R	0247834	Ceramic, discal	15 pF ±5%	500 V
C708L,R	0247834	Ceramic, discal	15 pF ±5%	500 V
C709L,R	0275713	Mylar, film	0.022μF ±10%	200 V
C710L,R	0275713	Mylar, film	0.022μF ±10%	200 V

www.hifiengine.com

SYMBOL NO.	STOCK NO.	DESCRIPTION		
C713L,R	0247862	Ceramic, discal	220 pF ±5%	500 V
C714L,R	0247862	Ceramic, discal	220 pF ±5%	500 V
		for SUB PRINTED WIRING BOARD		
C251	0252521	Electrolytic	10 μF	16 V
C252	0252525		47 μF	16 V
C253	0252521		10 μF	16 V
C254	0252815		4.7 μF	50 V
C255	0252522		22 μF	16 V
C256	0252521	Electrolytic	10 μF	16 V
C751L,R	0275011	Mylar, film	0.01 μF ±10%	50 V
C851	0252535K	Electrolytic	470μ F	16 V
C852	0252535K	Electrolytic	470μ F	16 V
C902	0252531K	Electrolytic	100μ F	16 V
		for CHASSIS ASSEMBLY		
⚠ C002	0243899	Ceramic, discal	0.01 μF $^{+100}_{-0}$%	125 V
⚠ C004	0274011	Mylar, film	1000 pF ±10%	50 V
⚠ C005	0274011	Mylar, film	1000 pF ±10%	50 V
⚠ C006	0274011	Mylar, film	1000 pF ±10%	50 V
		for REAR PLATE ASSEMBLY		
⚠ C001	0243898	Ceramic, discal	4700 pF $^{+100}_{-0}$%	125 V

RESISTORS

SYMBOL NO.	STOCK NO.	DESCRIPTION		
		for TUNER PRINTED WIRING BOARD		
R101	H129661	Carbon film	100 kΩ ±5%	SRD1/8P
R102	H129607		1.8 kΩ ±5%	
R103	H129547		47 Ω ±5%	
R104	H129553		82 Ω ±5%	
R105	H129635		15 kΩ ±5%	
R106	H129617		4.7 kΩ ±5%	
R107	H129601		1 kΩ ±5%	
R108	H129561		100 Ω ±5%	
R109	H129601		1 kΩ ±5%	
R110	H129619		5.6 kΩ ±5%	
R111	H129639		22 kΩ ±5%	
R112	H129623		8.2 kΩ ±5%	
R113	H129601		1 kΩ ±5%	
R114	H129561		100 Ω ±5%	
R115	H129563	Carbon film	120 Ω ±5%	SRD1/8P
R151	H129561	Carbon film	100 Ω ±5%	SRD1/8P
R152	H129621		6.8 kΩ ±5%	
R153	H129605		1.5 kΩ ±5%	
R154	H129673		330 kΩ ±5%	
R155	H129609		2.2 kΩ ±5%	
R156	H129575		390Ω ±5%	
R151	H129651		68 Ω ±5%	
R158	H129549	Carbon film	56 Ω ±5%	SRD1/8P
R201	H129601	Carbon film	1 kΩ ±5%	SRD1/8P
R202	H129551		68 Ω ±5%	
R203	H129547		47 Ω ±5%	
R204	H129609		2.2 kΩ ±5%	
R205	H129607		1.8 kΩ ±5%	
R206	H129575		390 Ω ±5%	
R207	H129575		390 Ω ±5%	

SYMBOL NO.	STOCK NO.	DESCRIPTION		
R208	H129561		100 Ω ±5%	
R209	H129623		8.2 kΩ ±5%	
R210	H129635		15 kΩ ±5%	
R211	H129665		150 kΩ ±5%	
R212	H129561		100 Ω ±5%	
R213	H129621		6.8 kΩ ±5%	
R214	H129577		470 Ω ±5%	
R215	H129647		47 kΩ ±5%	
R216	H129609		2.2 kΩ ±5%	
R217	H129633		12 kΩ ±5%	
R218	H129575		390 Ω ±5%	
R219	H129643		33 kΩ ±5%	SRD1/8P
⚠ R220	0100649		56 Ω ±5%	SRD1/4P
R221	H129609		2.2 kΩ ±5%	SRD1/8P
R222	H129619		5.6 kΩ ±5%	
R223	0129669		220 kΩ ±5%	
R224	H129609		2.2 kΩ ±5%	
R225	H129619		5.6 kΩ ±5%	
R226	H129615		3.9 kΩ ±5%	
R227	H129601		1 kΩ ±5%	
R228	H129671		270 kΩ ±5%	
R229	H129651		68 kΩ ±5%	
R230	H129661		100 kΩ ±5%	
R231	H129617		4.7 kΩ ±5%	
R232	H129561		100 Ω ±5%	
R233	0129619		5.6 kΩ ±5%	
R234	H129617		4.7 kΩ ±5%	
R235	H129643	Carbon film	33 kΩ ±5%	SRD1/8P
R240	0129605	Carbon film	1.5 kΩ ±5%	SRD1/8P
R241	H129633		12 kΩ ±5	
R242	H129619		5.6 kΩ ±5	SRD1/8P
R243	0114161	Carbon film	1 kΩ ±5	SRD1/4P
R301	H129645	Carbon film	39 kΩ ±5%	SRD1/8P
R302	H129553		82 Ω ±5%	
R303	H129643		33 kΩ ±5%	
R304	H129643		33 kΩ ±5%	
R305	H129631		10 kΩ ±5%	
R306	H129631		10 kΩ ±5%	
R307	H129647		47 kΩ ±5%	
R308	H129647		47 kΩ ±5%	
R309	H129605		1.5 kΩ ±5%	
R310	H129605	Carbon film	1.5 kΩ ±5%	SRD1/8P
R311	0110820	Metal	24 kΩ ±1%	RN1/4B
R312	H129601	Carbon film	1 kΩ ±5%	SRD1/8P
R313	H129665		150 kΩ ±5%	
R314	H129665		150 kΩ ±5%	
R315	H129631		10 kΩ ±5%	
R316	H129609	Carbon film	2.2 kΩ ±5%	SRD1/8P
R317	0134373	Composition	1 kΩ ±10%	RC1/2GF
R318	H129613	Carbon film	3.3 kΩ ±5%	SRD1/8P
R319	H129613		3.3 kΩ ±5%	
R320	H129631		10 kΩ ±5%	
R321	H129615		3.9 kΩ ±5%	
R322	H129615		3.9 kΩ ±5%	
R323	H129661		100 kΩ ±5%	
R324	H129661	Carbon film	100 kΩ ±5%	SRD1/8P

www.hifiengine.com

SYMBOL NO.	STOCK NO.	DESCRIPTION		
⚠ R401L,R	H129661	Carbon film	100 kΩ ±5%	SRD1/8P
⚠ R402L,R	H129601		1 kΩ ±5%	
R403L,R	H129661		100 kΩ ±5%	
R404L,R	H129603		1.2 kΩ ±5%	
R405L,R	H129649		56 kΩ ±5%	
R406L,R	H129681		680 kΩ ±5%	
R407L,R	H129579		560 Ω ±5%	
R408L,R	H129661		100 kΩ ±5%	
R409L,R	H129601		1kΩ ±5%	SRD1/8P
⚠ R410	0100661		100 Ω ±5%	SRD1/4P
⚠ R411	0100661	Carbon film	100 Ω ±5%	SRD1/4P
R601L,R	H129663	Carbon film	120 kΩ ±5%	SRD1/8P
R602L,R	H129633	Carbon film	12 kΩ ±5%	SRD1/8P
for AUDIO PRINTED WIRING BOARD				
R451L,R	0114297	Carbon film	470 kΩ ±5%	SRD1/4P
R452L,R	0114297	Carbon film	470 kΩ ±5%	SRD1/4P
R501	0114219	Carbon film	56 kΩ ±5%	SRD1/4P
R502	0114219	Carbon film	56 kΩ ±5%	SRD1/4P
R503	0114281	Carbon film	100 kΩ ±5%	SRD1/4P
R504	0114281	Carbon film	100 kΩ ±5%	SRD1/4P
R505	0114281	Carbon film	100 kΩ ±5%	SRD1/4P
R506	0119442	Metal oxide	1.2 kΩ ±10%	RS1B
R507	0119525	Metal oxide	220 Ω ±10%	RS2B
R508	0114169	Carbon film	2.2 kΩ ±5%	SRD1/4P
R509	0114211		27 kΩ ±5%	
R510	0114173		3.3 kΩ ±5%	
R511	0114167		1.8 kΩ 5%	
R512	0114179		5.6 kΩ ±5%	
R513	0114219		56 kΩ ±5%	
R514	0114219	Carbon film	56 kΩ 5%	SRD1/4P
R515	0119450	Metal oxide	5.6 kΩ ±10%	RS1B
R519	0114209	Carbon film	22 kΩ ±5%	SRD1/4P
R520	0114211	Carbon film	27 kΩ ±5%	SRD1/4P
R551L,R	0114201	Carbon film	10 kΩ ±5%	SRD1/4P
R552L,R	0114179	Carbon film	5.6 kΩ ±5%	SRD1/4P
R603L,R	0114161	Carbon film	1 kΩ ±5%	SRD1/4P
R604L,R	0114281		100 kΩ ±5%	
R605L,R	0114281		100 kΩ ±5%	
R606L,R	0114281		100 kΩ ±5%	
R607L,R	0114173		3.3 kΩ ±5%	
R608L,R	0114147		470 Ω ±5%	
R609L,R	0114201		10 kΩ ±5%	
R610L,R	0114165		1.5 kΩ ±5%	
R611L,R	0114153		820 Ω ±5%	SRD1/4P
R612L,R	0138143		8.2 kΩ ±5%	SRD1/4SD
R613L,R	0114207		18 kΩ ±5%	SRD1/4P
R614L,R	0114167	Carbon film	1.8 kΩ ±5%	SRD1/4P

SYMBOL NO.	STOCK NO.	DESCRIPTION		
R731L,R	0119155	Metal	22 Ω ±10%	RN2B
R732L,R	0119139	Metal	4.7 kΩ ±10%	RN3B
R733L,R	0119041	Metal	10 Ω ±10%	RN1B
R734L,R	0119526	Metal oxide	270 Ω ±10%	RS2B
R801	0134379	Composition	3.3 kΩ ±10%	RC1/2GF
R802	0134379		3.3 kΩ ±10%	
R803	0134373		1 kΩ ±10%	
~	~		~	
R806	0134373	Composition	1 kΩ ±10%	RC1/2GF
R807	0119421	Metal oxide	100 Ω ±10%	RSIB
R808	0119421	Metal oxide	100 Ω ±10%	RSIB
for MAIN PRINTED WIRING BOARD				
R516	0114161	Carbon film	1 kΩ ±5%	SRD1/4P
R517	0114205	~	15 kΩ ±5%	~
R518	0114205	Carbon film	15 kΩ ±5%	SRD1/4P
R701L,R	0114161	Carbon film	1 kΩ ±5%	SRD1/4P
R702L,R	0114281		100 kΩ ±5%	
R703L,R	0114177		4.7 kΩ ±5%	
R704L,R	0114281		100 kΩ ±5%	
R705L,R	0114139		220 Ω ±5%	
R706L,R	0114139	Carbon film	220 kΩ ±5%	SRD1/4P
⚠ R707L,R	0110629	Metal(fuse resistor)	470 kΩ ±5%	RN1/4B
R708L,R	0114151	Carbon film	680 Ω ±5%	SRD1/4P
R709L,R	0114143		330 Ω ±5%	
R710L,R	0114201		10 kΩ ±5%	
R711L,R	0114139		220 Ω ±5%	
R712L,R	0114161	Carbon film	1 kΩ ±5%	SRD1/4P
⚠ R713L,R	0110609	Metal(fuse resistor)	47 Ω ±5%	RN1/4B
R714L,R	0114141	Carbon film	270 Ω ±5%	SRD1/4P
⚠ R715L,R	0117395	Metal(fuse resistor)	2.2 kΩ ±5%	RN1/2B
R716L,R	0114295	Carbon film	390 kΩ ±5%	SRD1/4P
R717L,R	0114281		100 kΩ ±5%	
R718L,R	0114281		100 kΩ ±5%	
R719L,R	0114205		15 k Ω ±5%	
R720L,R	0114205		15 kΩ ±5%	
R721L,R	0114145		390 Ω ±5%	
R722L,R	0114145	Carbon film	390 Ω ±5%	SRD1/4P
⚠ R723L,R	0110609	Metal(fuse resistor)	47 Ω ±5%	RN1/4B
R724L,R	0114131	Carbon film	100 Ω ±5%	SRD1/4P
R725L,R	0119123	Metal	0.22 Ω ±10%	RNIB
R726L,R	0119123	Metal	0.22 Ω ±10%	RNIB
R727L,R	0119429	Metal oxide	470 Ω ±10%	RSIB
R728L,R	0119429	Metal oxide	470 Ω ±10%	RSIB
R729L,R	0114175	Carbon film	3.9 kΩ ±5%	SRD1/4P
R730L,R	0114175	Carbon film	3.9 kΩ ±5%	SRD1/4P
R771L,R	0114145	Carbon film	390 Ω ±5%	SRD1/4P
for SUB PRINTED WIRING BOARD				
R251	H129631	Carbon film	10 kΩ ±5%	SRD1/8P
R252	H129561		100 Ω ±5%	
R253	H129641		27 kΩ ±5%	

www.hifiengine.com

SYMBOL NO.	STOCK NO.	DESCRIPTION			
R254	H129561		100 Ω	±5%	
R255	H129631		10 kΩ	±5%	
R256	H129619		5.6 kΩ	±5%	
R257	H129601		1 kΩ	±5%	
R258	H129601		1 kΩ	±5%	
R259	H129631		10 kΩ	±5%	
R260	H129631		10 kΩ	±5%	
R261	H129601		1 kΩ	±5%	
R262	H129631		10 kΩ	±5%	
R263	H129605		1.5 kΩ	±5%	
R264	H129651		68 kΩ	±5%	
R265	H129631		10 kΩ	±5%	
R266	H129619	Carbon film	5.6 kΩ	±5%	SRD1/8P
R268	H129661	Carbon film	100 kΩ	±5%	SRD1/8P
R269	H129653		82 kΩ	±5%	
R270	H129635		15 kΩ	±5%	
R271	H129635		15 kΩ	±5%	
R272	H129633		12 kΩ	±5%	
R273	H129631	Carbon film	10 kΩ	±5%	SRD1/8P
⚠R274	0100645	Carbon film	39 Ω	±5%	SRD1/4P
R275	H129569	Carbon film	220 Ω	±5%	SRD1/8P
~	~	~	~		~
R279	H129569	Carbon film	220 Ω	±5%	SRD1/8P
R282	H129631	Carbon film	10 kΩ	±5%	SRD1/8P
R751	0114201	Carbon film	10 kΩ	±5%	SRD1/4P
R752	0114217	~	1.2 kΩ	±5%	~
R753L,R	0114161	Carbon film	1 kΩ	±5%	SRD1/4P
R901	H129607	Carbon film	1.8 kΩ	±5%	SRD1/8P
R902L,R	H129663	Carbon film	120 kΩ	±5%	SRD1/8P
for REAR PLATE ASSEMBLY					
⚠R001	0139005	Composition	2.7 MΩ	±10%	RC1/2GF

ICS, FETS & TRANSISTORS

SYMBOL NO.	STOCK NO.	DESCRIPTION
for TUNER PRINTED WIRING BOARD		
IC201	2367281	HA11211
IC301	2367271	HA1196
IC401L,R	2367341	HA1457
Q101	2327433	3SK45 Ⓑ BK
Q102	0573510	2SK525 Ⓑ
Q103	0573507	2SC461 Ⓑ
Q151	0573491	2SC454 Ⓑ
Q201	0573486	2SC460 Ⓑ
Q202	2327443	2SC1344 Ⓔ
Q203	2328282	2SC458 Ⓒ
Q204	2328282	2SC458 Ⓒ
Q301	2328282	2SC458 Ⓒ
Q302	2328282	2SC458 Ⓒ
for AUDIO PRINTED WIRING BOARD		
IC501	2367372	HA12002
IC601L,R	2367341	HA1457
Q501	2328282	2SC458 Ⓒ
Q711L,R	2328292	2SD673 Ⓒ
Q712L,R	2328312	2SB653 Ⓒ
Q713L,R	2328112	2SD586 Ⓡ
Q714L,R	2328102	2SB616 Ⓡ
Q801	2328422	2SD478 Ⓒ
Q802	2328432	2SB568 Ⓒ
Q803	2328422	2SD478 Ⓒ
for MAIN PRINTED WIRING BOARD		
Q701L,R	2327913	2SC1775 Ⓔ
Q702L,R	2327913	2SC1775 Ⓔ
Q703L,R	2327893	2SA872 Ⓔ
Q704L,R	2327913	2SC1775 Ⓔ
Q705L,R	2328458	2SB646A Ⓒ
Q706L,R	2328448	2SD666A Ⓒ
Q707L,R	2328465	2SD669A Ⓒ
Q708L,R	2328475	2SB649A Ⓒ
Q709L,R	2328283	2SC458 Ⓓ
Q710L,R	2327907	2SA872B Ⓔ
for SUB PRINTED WIRING BOARD		
IC251	2367901	LB1416
IC901L,R	2368811	IR2473
Q251	2328652	2SC1740LN Ⓢ
Q252	2328652	2SC1740LN Ⓢ
Q253	2328642	2SA825 Ⓠ
Q254	2328642	2SA825 Ⓠ
Q255	2328652	2SC1740LN Ⓢ
~	~	~
Q260	2328652	2SC1740LN Ⓢ
Q751	2328083	2SA844 Ⓔ
Q752L,R	2328783	2SC2389 Ⓔ

DIODES

SYMBOL NO.	STOCK NO.	DESCRIPTION
for TUNER PRINTED WIRING BOARD		
D101	2337011	IS2076
D201	2337011	IS2076
D203	2337922	IK34A
D204	2337922	IK34A
D205	2337011	IS2076
D206	2337011	IS2076
D301	2337011	IS2076
~	~	~
D303	2337011	IS2076
ZD201	2327732	HZ-7 (B)
for AUDIO PRINTED WIRING BOARD		
D501	2337011	IS2076

www.hifiengine.com

SYMBOL NO.	STOCK NO.	DESCRIPTION
D502	2337761	ERB12-01R
D503	2337011	IS2076
D504	2337761	ERB12-01R
D505	2337011	IS2076
D506	2337761	ERB12-01R
D551L,R	2337921	IK34A
D719L,R	2328031	U06C
D720L,R	2328031	U06C
D801	2337341	S5VB20
D802	2337341	S5VB20
ZD801	2337188	HZ-24-2
ZD802	2337188	HZ-24-2
ZD803	2337103	HZ-12C
D001	2337411	LED (Red) (for protection indi.)
for MAIN PRINTED WIRING BOARD		
D701L,R	2337011	IS2076
D703L,R	2337011	IS2076
D704L,R	2337641	ISS81
D705L,R	2337011	IS2076
~	~	~
D714L,R	2337011	IS2076
D715L,R	2337641	ISS81
D716L,R	2337641	ISS81
D717L,R	2337011	IS2076
D718L,R	2337011	IS2076
D721L,R	2337011	IS2076
ZD501	2337184	HZ-16-1
ZD5021	2337431	HZ-3A
for SUB PRINTED WIRING BOARD		
D251	2337601	IS2473
D252	2338682	LED array (LD-005RB-1)
~	~	~
D256	2338682	LED array (LD-005RB-1)
D257	2337601	IS2473
D258	2337932	IK60RF
D259	2337601	IS2473
~	~	~
D261	2337601	IS2473
D263	2337812	LED (Green) GL-5NG6
D264	2337751	LED (Red) GL-5PR6
D265	2337812	LED (Green) GL-5NG6
D267	2337752	LED (Red) GL-5PR6H
D851	2337761	ERB12-01R
D852	2337761	ERB12-01R
D901-912L,R	2338681	LED array
ZD751	2337188	HZ-24-2
ZD752 L,R	2337121	HZ-6A
ZD901	2337515	HZ-6B-2

SYMBOL NO.	STOCK NO.	DESCRIPTION
for MECHANISM PLATE ASSEMBLY		
D002	2337411	LED (for STEREO indi.)
D003	2337732	LED TLG-205 (for Dynaharmony or CLASS G indi.)
VARIABLE RESISTORS		
for TUNER PRINTED WIRING BOARD		
R236	0151225	50 kΩ - (B)
R237	0151224	10 kΩ - (B)
R238	0151284	300 kΩ - (B)
for AUDIO PRINTED WIRING BOARD		
R651L,R	0158058	200 kΩ - (B) (VOLUME)
R652	0158058	200 kΩ - (B) (BALANCE)
R653L,R	0151681	50 kΩ - (C) (TREBLE)
R654L,R	0151681	50 kΩ - (C) (BASS)
for MAIN PRINTED WIRING BOARD		
R751L,R	0151306	300 Ω - (B)
COILS & TRANSFORMERS		
for TUNER PRINTED WIRING BOARD		
L101	2134471	FM OSC coil
L102	2227351	Choke coil - 1μH
L151	2227353	Choke coil - 100μH
L152	2757313	AM Ferrite antenna
L153	2134431	AM OSC coil
L202	2227271	Choke coil - 18 μH
L203	2227351	Choke coil - 1 μH
T101	2134741	FM antenna transformer
T102	2134743	FM RF transformer
T151	2154341	AM IF transformer
T201	2154291	FM IF transformer
T202	2154271	FM discriminating transformer
T251	2154122	AM IF transformer
for AUDIO PRINTED WIRING BOARD		
L701L,R	2227311	Andio trap coil - 2.5 μH
MISCELLANEOUS		
MF201	2134991	Ceramic filter
MF202	2134991	Ceramic filter
MF203	2134991	Ceramic filter
	2677392	4P US pin jack (TAPE)
	2677421	4P US pin jack
S401	2617602	Switch-rotary switch (FUNCTION)
S402	2627281	Switch-lever switch (TAPE COPY)
S403	2627271	Switch-lever switch (TAPE MONITOR)
S601-603	2638004	Switch-push switch (MODE, Others)
S604,605	2637993	Switch-push switch (FILTER)

www.hifiengine.com

SYMBOL NO.	STOCK NO.	DESCRIPTION
S701,702	2638063	Switch-push switch (SPEAKER A,B)
CP301	2134771	Leak filter
J001	2677233	Jack-headphone jack
CV101-103,151,152	0281169	Variable capacitor
CT103	0283122	Trimmer capacitor
	2777011	Ferrite core
	2748801	5P cord with connector
	2748791	4P cord with connector
	2688051	Speaker terminal
⚠ F002	2727543	Fuse-2A, 125 V
⚠ F701L,R	2727224	Fuse- 4A, 250 V
⚠ F702L,R	2727224	Fuse- 4A, 250 V
	2667321	6P connector (C)
	2667251	4P connector (B)
	2667283	4P miniature connector
	2667284	5P miniature connector
	2647581	LED holder
RL501	2647091	Power relay
	4567414	3 φ x 12 DT bind screw
	4567412	3 φ x 8 DT bind screw
	4397021	Washer
	4575341	3 φ x 14 screw with washer
	3920371	Bushing
	8715414	3 φ x 14 pan head screw
	4567411	3 φ x 6 DT bind screw
	4567412	3 φ x 8 DT bind screw
	2667265	6P connector (A)
	2667264	4P connector (A)
		for FINAL ASSEMBLY
	3246611	Escutcheon ass'y
	3285475	Knob ass'y (SPEAKERS A,B)
	3285474	Knob ass'y (POWER)
	3284974	Knob ass'y (MODE, LOUDNESS, FM MUTE)
	3284975	Knob ass'y (FILTER)
	3284831	Knob (BALANCE)
	3284871	Knob ass'y (TUNING)
	3284851	Knob ass'y (BASS, TREBLE, FUNCTION)
	3284891	Knob ass'y (VOLUME)
	3284992	Knob-lever knob (TAPE COPY, TAPE MONITOR)
	3916411	Leg
	4743852	Knob ring (for BALANCE knob)
	4743392	Knob ring (L)(for BASS,TREBLE,FUNCTION knob)
	4567411	3 φ x 6 CT bind screw (for bottom board fixing)
	0645587	Special washer
	4567412	3 φ x 8 DT bind screw (for escutcheon fixing)
	4567413	3 φ x 10 CT bind screw (for leg fixing)
	4575465	4 φ x 16 DT screw with washer (for cover fixing)
		for DIAL MECHANISM ASSEMBLY
	3387281	Dial pointer ass'y
	0666704	Wire clip
	3337201	Spring
	4575472	3 φ x 8 DT screw with washer
		for CHASSIS ASSEMBLY
S001	2637322	Switch-POWER switch
	3922542	Pulley

SYMBOL NO.	STOCK NO.	DESCRIPTION
	4567411	3φ x 6 DT bind screw (for lever switch other's fixing)
	3917802	Washer
	4567452	3φ x 8 DT bind screw
	4567413	3φ x 10 CT bind screw
	4567432	3φ x 8 CT bind screw (for speaker terminal fixing)
	4574603	3φ x 10 bind double thread screw
		for MECHANISM PLATE ASSEMBLY
	4574321	Flywheel ass'y
	4113441	9φ nut
	4408301	Dial scale
	3183081	Lodging scale
	3931191	Indicator (Red)
	3932771	Indicator
	2647587	LED holder (for STEREO indi.)
	2647589	LED holder (for Dynaharmony or CLASS G indi.)
	2506891	Lamp P.W.B. ass'y
PL001	2767502	Pilot lamp
~	~	~
PL005	2767502	Pilot lamp
	4574603	3 φ x 10bind double thread screw (for lamp cover fixing)
		for REAR PLATE ASSEMBLY
⚠	0043793	Bushing (for power supply cord)
⚠	2748863	Power supply cord
⚠T001	2218621	Power transformer
	2687451	6P terminal board
⚠	2657281	AC outlet
⚠F001	2727547	Fuse - 5A, 125 V
	3925681	Fuse cap
	2687653	3P antenna terminal
	4567432	3 φx 8 CT bind screw (for antenna terminal, other's fixing)
	4575432	3 φ x 8 DT screw with washer (for AC bush plate)
	4575453	4 φ x 12 DT screw with washer (for P. trans. fixing)
	4770255	4 φ flanged nut (for P. trans)
		for ACCESSORY
	2748371	FM antenna
		for AMPLIFIER BOX ASSEMBLY
	9403079	Cabinet ass'y

www.hifiengine.com

FRONT AND REAR PANEL · PANNEAUX AVANT ET ARRIERE

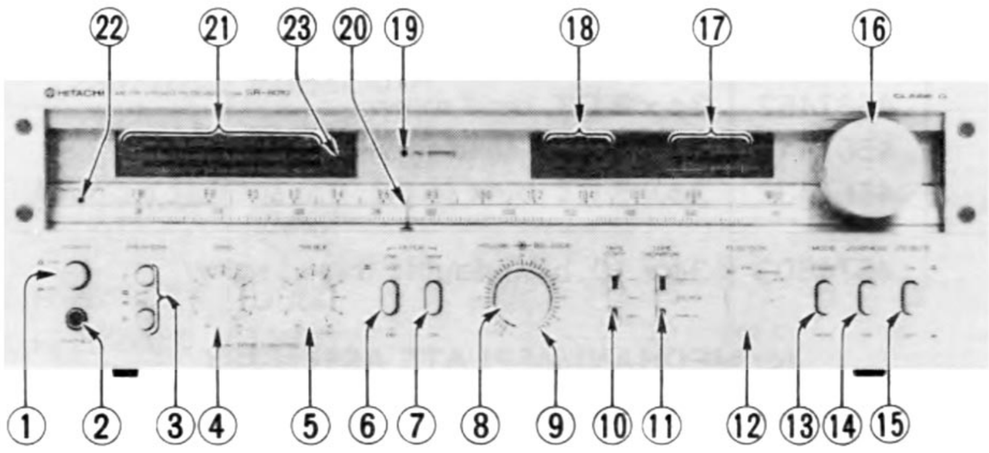

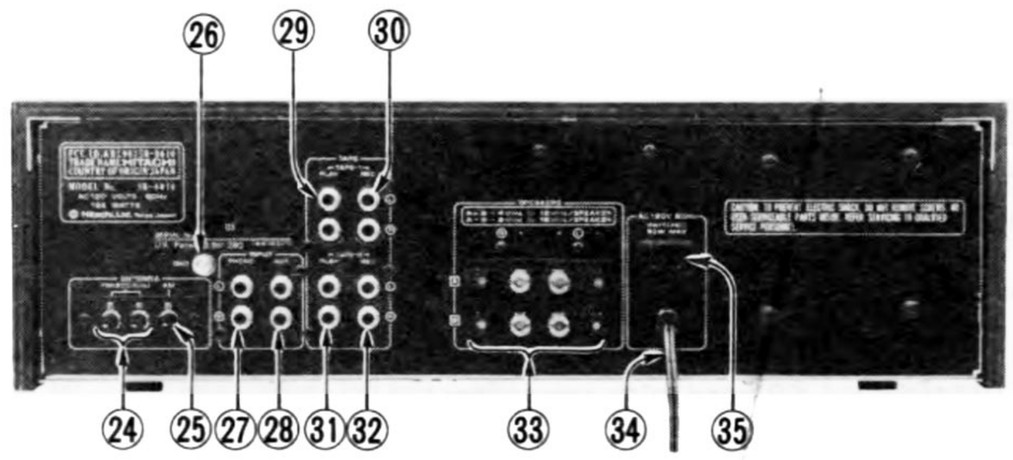

1. POWER switch
2. PHONES jack
3. SPEAKERS switches (A, B)
4. BASS control
5. TREBLE control
6. LOW FILTER switch
7. HIGH FILTER switch
8. VOLUME control
9. BALANCE control
10. TAPE COPY switch
11. TAPE MONITOR switch
12. FUNCTION switch
13. MODE switch
14. LOUDNESS switch
15. FM MUTE switch
16. Tuning knob
17. SIGNAL indicators
18. VECTOR TUNING indicators
19. FM STEREO indicator
20. Dial pointer
21. POWER LEVEL indicator
22. PROTECTION indicator
23. Class G (Dynaharmony) indicator
24. FM ANTENNA terminals
25. AM ANTENNA terminal
26. Ground terminal (GND)
27. PHONO INPUT terminals
28. AUX INPUT terminals
29. TAPE-1 PLAY terminals
30. TAPE-1 REC OUT terminals
31. TAPE-2 PLAY terminals
32. TAPE-2 REC OUT terminals
33. SPEAKERS terminals
34. Power supply cord
35. AC outlet

1. Interrupteur secteur (POWER)
2. Casque stéréophonique (PHONES)
3. Interrupteur de haut-parleurs (A, B) (SPEAKERS)
4. Commande des graves (BASS)
5. Commande des aigus (TREBLE)
6. Commutateur de filtre passe-bas (LOW FILTER)
7. Commutateur de filtre passe-haut (LOW FILTER)
8. Commande de VOLUME
9. Commande d'équilibrage (BALANCE)
10. Commutateur de copiage de bande (TAPE COPY)
11. Commutateur de contrôle de bande (TAPE MONITOR)
12. Commutateur de fonction (FUNCTION)
13. Commutateur de MODE
14. Commutateur de correction physiologique (LOUDNESS)
15. Commutateur de sourdine FM (FM MUTE)
16. Bouton d'accord
17. Témoins de signal (SIGNAL)
18. Indicateurs d'accord vectoriel (VECTOR TUNING)
19. Indicateur stéréo (FM STEREO)
20. Aiguille de cadran
21. Indicateurs de puissance (POWER LEVEL)
22. Lamp de PROTECTION
23. Témoin de Dynaharmony (classe G)
24. Bornes d'antenne FM (FM ANTENNA)
25. Borne d'antenne AM (AM ANTENNA)
26. Borne de terre (GND)
27. Bornes d'entrée PHONO (PHONO INPUT)
28. Bornes d'entrée auxiliaires (AUX INPUT)
29. Bornes de reproduction de bande 1 (TAPE-1 PLAY)
30. Bornes d'enregistrement de bande 1 (TAPE-1 REC OUT)
31. Borne de reproduction de bande 2 (TAPE-2 PLAY)
32. Borne d'enregistrement de bande 2 (TAPE-2 REC OUT)
33. Borne de haut-parleur (SPEAKERS)
34. Cordon d'alimentation C.A.
35. Sortie C.A.

Hitachi, Ltd. Tokyo Japan

Head Office : 5-1, 1-chome, Marunouchi, Chiyoda-ku, Tokyo, Japan
Tel. : Tokyo (212) 1111 (80 lines)
Cable Address : "HITACHY" TOKYO

Printed in Japan (S)

www.hifiengine.com