SR-802

HITACHI

STEREO RECEIVER
STEREO-STEUERGERÄT
RÉCEPTEUR STEREOPHONIQUE

MODEL
MODELL
MODÈLE

SR-802

SERVICE MANUAL
SERVICE ANLEITUNG
SERVICE MANUAL

No. 88 1975

1. SPECIFICATIONS, TECHNISCHE DATEN, CARACTÉRISTIQUES TECHNIQUES

- **FM SECTION**

Frequency range		88 – 108 MHz
Sensitivity (IHF)		1.7 μV
Image rejection		85 dB
IF rejection		100 dB
Harmonic distortion	Mono	0.15% (400 Hz)
	Stereo	0.25% (400 Hz)
Signal-to-noise ratio		74 dB
Selectivity (IHF)		80 dB
Capture ratio		1.0 dB
Stereo separation		45 dB (1 kHz)
AM suppression		55 dB

- **AM SECTION**

Frequency range		530 – 1,605 kHz
Sensitivity		300 μV/m (S/N 20 dB), 20 μV (IHF)
Image rejection		50 dB
IF rejection		50 dB
Selectivity (IHF)		35 dB
Signal-to-noise ratio		50 dB

- **AUDIO SECTION**

Output

RMS power (Both channel driven)		50 watts per channel, min. RMS, at 8 ohms from 20 Hz to 20 kHz, with no more than 0.5% total harmonic distortion.
Music power (IHF)		60 W/ch+60 W/ch (8 ohms,1 kHz, T.H.D. 0.5%) 70 W/ch+70 W/ch (4 ohms, 1 kHz, T.H.D. 0.5%) 80 W/ch+80 W/ch (8 ohms, T.H.D. 1%) 90 W/ch+90 W/ch (4 ohms, T.H.D. 1%)
Frequency characteristics		10 Hz – 30 kHz (± 1 dB)
Power bandwidth		10 Hz – 40 kHz
Harmonic distortion	at rated output	0.5%
	at ½ rated output	0.05%

www.hifiengine.com

Intermodulation distortion	at rated output	0.3%
	at ½ rated output	0.2%
Input sensitivity (at 55 W output, 1 kHz)		
PHONO		2.5 mV (47 k ohms)
AUX		150 mV (50 k ohms)
TAPE-1		150 mV (50 k ohms)
TAPE-2		150 mV (50 k ohms)
Output level	TAPE OUT	150 mV (PHONO, AUX at rated input)
		150 mV (FM 400 Hz, 30% dev. input: 1 mV)
		150 mV (AM 400 Hz, 30% mod. input: 5 mV/m)
	DIN OUT	40 mV (PHONO at rated input)
Crosstalk (1 kHz)	PHONO	55 dB
	AUX	70 dB
	TAPE	70 dB
Signal-to-noise ratio	PHONO	70 dB
	AUX	85 dB
	TAPE	85 dB
Damping factor		50 (1 kHz, 8 ohms)
Equalizer		RIAA ± 1 dB
Bass control		± 10 dB (100 Hz)
Treble control		± 10 dB (10 kHz)
Loudness control		+ 9 dB (10 kHz), + 4 dB (10 kHz)
Power supply		AC 120 V, 220V – 240 V, 50/60 Hz
Power consumption		230 W or 285 VA (120 V), 370 W (220 – 240 V)
Dimensions		490 (W) x 144 (H) x 400 (D) mm
Weight		12.8 kg

Specifications and designs may be changed without notice for improvement.

- **UKW-Teil**

Wellenbereich		88 – 108 MHz
Empfindlichkeit (IHF)		1,7 μV
Spiegelselektion		85 dB
ZF-Dämpfung		100 dB
Klirraktor	Mono	0,15% (400 Hz)
	Stereo	0,25% (400 Hz)
Geräuschspannungsabstand		74 dB
Selektivität (IHF)		80 dB
Einfangverhältnis		1,0 dB
Kanaltrennung		45 dB (1 kHz)
AM Unterdrückung		55 dB

- **MW-Teil**

Wellenbereich	530 – 1.605 kHz
Empfindlichkeit	300 μV/m (S/N 20 dB), 20 μV (IHF)
Spiegelselektion	50 dB
ZF-Dämpfung	50 dB
Selektivität (IHF)	35 dB
Geräuschspannungsabstand	50 dB

- **NF-Teil**

Ausgang		
Sinusleistung		50 W/ch+50 W/ch (8 Ohm, 20 Hz – 20 kHz, 0,5%)
		60 W/ch+60 W/ch (4 Ohm, 20 Hz – 20 kHz, 0,5%)
		60 W/ch+60 W/ch (8 Ohm, 1 kHz, 0,5%)
		70 W/ch+70 W/ch (4 Ohm, 1 kHz, 0,5%)
Musikleistung (IHF)		80 W/ch+80 W/ch (8 Ohm, 1%)
		90 W/ch+90 W/ch (4 Ohm, 1%)
Frequenzumfang		10 Hz – 30 kHz (± 1 dB)
Ausgangs-Bandbreite		10 Hz – 40 kHz
Klirrfaktor	bei Nennleistung	0,5%
	bei halber Leistung	0,05%

www.hifiengine.com

Intermodulation bei Nennleistung	
bei Nennleistung	0,3%
bei halber Leistung	0,2%
Eingangsempfindlichkeit (bei 55 W, 1 kHz)	
PHONO	2,5 mV (47 kOhm)
AUX	150 mV (50 kOhm)
Tonband-1	150 mV (50 kOhm)
Tonband-2	150 mV (50 kOhm)
Ausgänge TAPE OUT	150 mV (PHONO, AUX bei Nenneingangsleistung)
	150 mV (FM 400Hz, 30% Dev. Eingang: 1 mV)
	150 mV (AM 400Hz, 30% Mod. Eingang: 5 mV/m)
DIN OUT	40 mV (PHONO bei Nenneingangsleistung)
Fremspannungsabstand (1 kHz) PHONO	55 dB
AUX	70 dB
TAPE	70 dB
Geräuschspannungsabstand PHONO	70 dB
AUX	85 dB
TAPE	85 dB
Dämpfungsfaktor	50 (1 kHz, 8 Ohm)
Entzerrung	RIAA ± 1 dB
Tiefeneinstellung	± 10 dB (100 Hz)
Höheneinstellung	± 10 dB (10 kHz)
Gehörrichtige Lautstärke	+ 9 dB (100 Hz), + 4 dB (10 kHz)
Netzspannung	AC 120 V, 220 – 240 V, 50/60 Hz
Leistungsaufnahme	230 W oder 285 VA (120 V), 370 W (220 – 240 V)
Abmessungen	490 (B) x 144 (H) x 400 (T) mm
Gewicht	12,8 kg

Änderungen der technischen Daten bleiben im Sinne der ständigen Verbesserung vorbehalten.

- **Partie FM**

Bande de fréquence	88 – 108 MHz
Sensibilité (IHF)	1.7 μV
Rejet image	85 dB
Rejet MF	100 dB
Distorsion harmonique Mono	0.15% (400 Hz)
Stéréo	0.25% (400 Hz)
Rapport signal/bruit	74 dB
Sélectivité (IHF)	80 dB
Rapport de captage	1.0 dB
Séparation stéréo	45 dB (1 kHz)
Suppression AM	55 dB

- **Partie AM**

Bande de fréquence	530 – 1,605 kHz
Sensibilité	300 μV/m (S/B 20 dB), 20 μV (IHF)
Rejet image	50 dB
Rejet MF	50 dB
Sélectivité (IHF)	35 dB
Rapport signal/bruit	50 dB

- **Partie AUDIO**

Sortie	
Puissance nomiale	50 W/ch + 50 W/ch (8 ohms, 20 Hz – 20 kHz, T.H.D. 0.5%)
	60 W/ch + 60 W/ch (4 ohms, 20 Hz – 20 kHz, T.H.D. 0.5%)
	60 W/ch + 60 W/ch (8 ohms, 1 kHz, T.H.D. 0.5%)
	70 W/ch + 70 W/ch (4 ohms, 1 kHz, T.H.D. 0.5%)
Puissance musicale	80 W/ch + 80 W/ch (8 ohms, T.H.D. 1%)
	90 W/ch + 90 W/ch (4 ohms, T.H.D. 1%)
Bande passante	10 Hz – 30 kHz (± 1%)
Sortie bande passante	10 Hz – 40 kHz
Distorsion harmonique à la puissance réelle	0.5%
à la moitié de la puissance réelle	0.05%

www.hifiengine.com

Distorsion d'intermodulation	à la puissance réelle	0.3%
	à la moitié de la puissance réelle ...	0.2%
Sensibilité d'entrée (sous 1 W, 1 kHz de sortie)		
PHONO	.....	2.5 mV (47 k ohms)
AUX	.....	150 mV (50 k ohms)
Bande-1	.....	150 mV (50 k ohms)
Bande-2	.....	150 mV (50 k ohms)
Bornes de sortie	TAPE OUT	150 mV (PHONO, AUX à l'entrée nominale)
		150 mV (FM 400 Hz, 30% d'entrée dev.: 1 mV)
		150 mV (AM 400 Hz, 30% d'entrée mod.: 5 mV/m)
	DIN OUT	40 mV (PHONO à l'entrée nominale)
Interférence (1 kHz)	PHONO	55 dB
	AUX	70 dB
	TAPE	70 dB
Rapport signal/bruit	PHONO	70 dB
	AUX	85 dB
	TAPE	85 dB
Facteur d'atténuation	.....	50 (1 kHz, 8 ohms)
Compensateur	.....	RIAA ± 1 dB
Basse	.....	± 10 dB (100 Hz)
Aigu	.....	± 10 dB (10 kHz)
Sonorité	.....	+ 9 dB (100 Hz), + 4 dB (10 kHz)
Alimentation	.....	Secteur 120V, 220 – 240V, 50/60 Hz
Consommation	.....	230 W ou 285 VA (120 V), 370 W (220 – 240 V)
Dimensions	.....	490 (L) x 144 (H) x 400 (P) mm
Poids	.....	12.8 kg

Les caractéristiques techniques et la présentation peuvent être modifiées sans préavis pour des raisons d'amé liorations.

2. FEATURES, TECHNISCHE MERKMALE, CARACTÉRISTIQUES

Tuner Section

1. Dual gate MOS FET and linear frequency type (4 stage) variable condensers are used for the FM front section. These improve various characteristics, including reflection interference, spurious interference and the S/N ratio.
2. 4-stage differential amplification is used. By the extensive use of ICs, together with 3 ceramic filter elements that have good phase characteristics, in the FM-IF amplifier there is a great improvement in the limiter and selectivity characteristics.
   Quadrature detection, using ICs extensively, has a wide band coverage and low distortion.
3. PLL-IC, which was developed by Hitachi, is used for FM/MPX circuits, and high separation and low distortion are achieved; also high reliability is achieved as far as the effects of temperature and aging are concerned.
4. A reed relay is employed in the FM "MUTING" circuit. With this circuit all inter-station noise is eliminated while a station is being selected and so pleasant listening is enjoyed.
5. A ceramic filter is employed in the AM tuner to obtain high selectivity and AGC characteristics. The extensive use of ICs enables stable reception to be achieved.
6. Two easy-to-read meters are used. A dial mechanism employing a large-sized fly-wheel with a high moment of inertia, and a 75 ohm antenna make for easy operation.

Audio section

1. All-stage direct-connection inverted Darlington OCL circuit, which uses NPN, PNP silicon transistor with good linearity, is employed to improve frequency characteristic, power bandwidth and distortion.
2. Hitachi's original, highly reliable electronic protection circuit is built in to protect the speakers and power transistors. When a fault occurs, the circuit is switched off and this is then displayed on the front panel by light emitting diode.
3. New ICs developed by Hitachi are employed in the equaliser and the first stage of the main amplifier, this stabilizes the circuit as well as giving a wide dynamic range.
4. Tape dubbing can be done either from TAPE-1 to TAPE-2 or vice versa. In addition, a source monitor circuit, with which tape dubbing is possible while listening to an FM broadcast or a record, is provided.
5. A low-pass filter to cut out low frequency noise and a high-pass filter to cut out the high frequency noise are provided.
6. Two different types of speaker systems can be connected to the unit and the change from one to the other is simply by a switch.

www.hifiengine.com

Rundfunkempfangsteil

1. Dual-Steuerelektrode (MOS FET) und 4-stufiger Verstellkondensator mit ausgezeichneter Linearität im FM-Eingangsteil verbessern Spiegelfrequenzgang und Fremdspannungsabstand und vermindern unerwünschte Ausstrahlungen.
2. 4-stufiger Differenitialverstärker mit integrierten Schaltungen und drei Keramikfiltern ausgezeichnetem Phasenverhaltens im FM-Zwischenfrequenz-Verstärkungsteil für verbesserte Begrenzungscharakteristik und Selektivität. Ein mit integrierten Schaltungen bestückter Phasenschieberkreis sorgt für ausgezeichnete Bandbreite und geringe Verzerrung.
3. Eine von Hitachi entwickelte phasenstarre Printschaltung (PLL-IC) wird im FM/MPX-Teil verwendet, wodurch hervorragende Signaltrennung bei geringster Verzerrung erzielt wird. Ausgezeichnete Zuverlässigkeit auch bei Temperaturschwankungen und hervorragende Alterungsbeständigkeit.
4. Ein Zungenrelais in der FM-Stillabstimmung garantiert vermindertes Zwischenstationsrauschen während der Sendersuche und sorgt für optimale Empfangsqualität.
5. Im AM-Tuner sorgt ein Keramikfilter für ausgezeichnete Selektivität, und die Verwendung von Integralschaltungen garantiert exzellente Schwundausgleich-Charakteristik, so daß stabiler Empfang gewährleistet wird.
6. Zwei großflächige Anzeigeinstrumente.
   Zwei Anzeigeinstrumente, ein großes Schwungrad mit hohem Trägheitsmoment und eine 75-Ohm Antenne erleichtern die Bedienung und gewährleisten optimalen Empfang.

Audio-Teil

1. Ein Gegentaktverstärker in Darlington-OCL-Schaltung, der mit NPN und PNP Siliziumtransistoren hervorrangender Linearität bestückt ist, sorgt für verbesserte Frequenzcharakteristik, große Leistungsbandbreite und sehr geringen Klirrfaktor.
2. Eine äußerst zuverlässige, von Hitachi entwickelte Elektronikschutzschaltung schützt die Lautsprecher und Hochleistungstransistoren. Bei Störungen tritt diese Schutzschaltung in Betrieb und die Störung wird an der Fronttafel angezeigt.
3. Im Entzerrer und der ersten Stufe des Hauptverstärkers gelangen von Hitachi neu entwickelte Printschaltungen zur Anwendung, wodurch stabiler Empfang und hoher Dynamikbereich erzielt werden.
4. Bandaufnahme vom Original, d.h. Überspielen von TAPE-1 auf TAPE-2 oder umgekehrt, durch Anschluß an dieses Gerät möglich. Ausgerüstet mit Monitor-Schaltung, wodurch Tonbänder bei gleichzeitigem UKW-Empfang bzw. während der Wiedergabe von Schallplatten überspielt werden können.
5. Ausgerüstet mit Höhen- und Tifenfilter, wodurch Hochfrequenz-bzw. Niederfrequenzrauschen eliminiert werden kann.
6. Anschlußmöglichkeit für zwei getrennte Boxenpaare; schaltbar mittels Umschalter.

Section Tuner

1. Un FET MOS à double entrèe et des condensateurs variable à fréquence linéaire (4 étages) sont utilisés pour la section FM. Ceci améliore diverses caractéristiques, en particulier les interférences de réflection, les fausses interférences et le rapport Signal/Bruit.
2. On utilise un systèmes d'amplification différenttiel à 4 étages. Grâce à la large utilisation de circuits intégrés, ainsi que d'éléments filtres céramique qui ont d'excellentes caractéristiques de phase, dans l'amplificateur FM-IF, le progrès est considérable dans les caractéristiques de régulation et de sélectivité. La détection quadraphonique, qui utilise largement les circuits intégrés, couvre une large bande et permet une faible distorsion.
3. PLL-IC (circuits intégrés, boucle à blocage de phase), mis au point par Hitachi, sont utilisés pour les circuits FM/MPX (multiplex), et on atteint ainsi une haute séparation et une faible distorsion; la fiabilité en est excellente tant que les effects de la température et du vieillissement ne se font pas sentir.
4. On utilise un relais à lame vibrante dans le circuit atténuateur FM. Grâce à ce circuit, tous les bruits inter-station sont éliminés pendant la sélection des stations. On peut profiter ainsi d'une écoute agréable.
5. On utilise un filtre céramique dans le tuner AM pour obtenir une haute sélectivité et des caractéristiques AGC (Contrôle de volume automatique). La large utilisation de circuits intégrés permet une réception stable.
6. Utilisation de deux mètreurs à lecture facile.
   Il s'agit d'un mécanisme utilisant un volant de large dimension à fort moment d'inertie ainsi que d'une antenne de 75 ohms conçue pour une manipulation facile.

Section Audio

1. Le circuit Darlington OCL à inversion et à connection directe pour tous les étages, équipé de transistors au silicium NPN, PNP affichant une excellente linéarité, est utilisé dans le but d'améliorer les caractéristiques de fréquences, la bande passante et le taux de distorsion.
2. Le circuit électronique de protection hautement fiable, exclusivité Hitachi, est intégré pour protéger les hautparleurs et les transistors. Si une erreur quelconque se produit, le circuit est coupé et cela se trouve signalé sur le panneau avant.
3. De nouveaux circuits intégrés, mis au point par Hitachi, sont utilisés dans l'égalisateur et dans le premier étage de l'amplificateur principal, cela stabilise le circuit et donne une large portée dynamique.
4. On peut reproduire des bandes de TAPE-1 vers TAPE-2 ou inversement. De plus, un circuit de monitoring de la source est fourni grâce auquel on peut reproduire (copier) des bandes tout en écoutant un programme FM ou un disque.
5. On dispose également d'un filtre passe-bas pour éliminer les bruits de basse fréquence et d'un filtre passe-haut pour éliminer les bruits de haute fréquence.
6. Deux types différents de systèmes de hautparleurs peuvent être connectés à cet appareil et le passage de l'un à l'autre se fait par un simple commutateur.

www.hifiengine.com

3. SERVICE POINT, WARTUNGSPUNKTE, POINTS DE SERVICE

1. **Removing the variable resistor**
   Detach screw, nuts and washers shown in Fig. 3 after removing the escutcheon. Then pull the control printed wiring board down.
2. **Removing the audio printed wiring board**
   Removes screws shown in Fig. 4 and Fig. 5.
3. **Removing the equalizer printed wiring board**
   After removing the audio printed wiring board, take off the shield plate of the equalizer printed wiring board by straightening and unsoldering the foot of the shield palte. And remove the shaft connectors shown in Fig. 7.
4. **Replacing the dial scale lamp**
   Straighten the lamp printed wiring board holders and then remove the printed wiring board from the cover. To remove the lamp shown in Fig. 8, unsolder the lead connections and melt the adhesive with heat from soldering iron. (Do not use your fingers to remove the lamp. They may be hurt.)
   The replacement lamp shown in Fig. 8 is available from our service parts. There is no need to fix it with adhesive.
5. **Caution-when exchanging a power transistor**
   When exchanging one of the power transistors (Q703, 704), due to its having deteriorated, be sure to check the other transistors.
   Be careful as they may deteriorate as a reaction to the deterioration of the transistor to be removed.
6. **Caution-when exchanging the FM ceramic filter**
   FM ceramic filters (MF201–203) are identified by color, red, blue and orange, depending on the range of accuracy of their characteristics. Replace MF201–203 by filters of the same color when exchanging parts. In our service parts, MF201–203 are replaced as a apir.

---

1. **Ausbau des Regelwiderstandes**
   Frontplatte entfernen und danach Schraube, Muttern und Beilegescheiben gemäß Abb.3 abnehmen. Anschile end die Reglerdruckschaltung nach unten herausziehen.
2. **Ausbau der Audiodruckschaltung**
   Die Schrauben gemäß Abb. 4 und Abb. 5 lösen.
3. **Ausbau der Entzerrer-Druckschaltung**
   Nach dem Ausbau der Audiodruckschaltung die Lasche der Abschirmplatte geradebiegen bzw. ablöten, wonach die Abschirmplatte von der Audiodruckschaltung abgenommen werden kann.
4. **Auswechseln der Skalenbeleuchtungs-Glühbirne**
   Die Halter der Leuchtendruckschaltung geradebiegen und die Druckschaltung vom Deckel abnehmen. Um die in Abb.8 gezeigte Lampe abnehmen zu können, die Leiterverbrindung ablöten und den Kleber mit Hilfe eines warmen Lötkolbens erweichen. (Die Lampe nicht mit den Fingern abnehmen, da Verletzungsgefahr besteht.)
   Die in Abb.8 gezeigte Ersatzlampe ist als Serviceteil erhältlich. Bei der Anbringung muß,kein Klebemittel verwendet werden.
5. **Vorsicht beim Austausch der Leistungstransistoren**
   Wenn einer der Leistungstransistoren (Q703, 704) ausgewechselt werden muß, auch den Zustand der anderen Transistoren überprüfen.
   Unbedingt beachten, daß ein beschädigter Transistor auch die anderen Transistoren negativ beeinflussen kann.
6. **Vorsicht beim Austausch des FM-Keramikfilters**
   Die FM-Keramikfilter(MF201–203)sind in Abhängigkeit von ihrer Genauigkeit und Eigenschaft mit den Farbkennzeichnungen Rot, Blau und Orange versehen. Wenn erforderlich, die Filter MF201–203 daher gegen Filter mit der gleichen Farbkennzeichnung austauschen.
   Unsere Serviceteile MF201–203 sind geneinsam auszutauschen.

---

1. **Pour enlever le résistor variable**
   Détacher les vis, les écrous et les rondelles (voir Fig. 3) après avoir enlever la plaque. Puis tirer la plaque du circuit imprimé de contrôle.
2. **Pour enlever la plaque de circuit imprimé audio**
   Détacher les vis comme il est montré sur les Fig. 4 et 5.
3. **Pour enlever la plaque de circuit imprimé égaliseur de potentiel**
   Aprés avoir retiré la plaque de circuit imprimé audio, enlever la plaque de protection du circuit imprimé égaliseur de potentiel en redressant et déssoudant le pied de la plaque protectrice.
   Enlever l'axe de connexion (voir Fig. 7)
4. **Pour replacer la lampe du cadran gradué**
   Redresser le support des plaques de circuit imprimé de lampe et enlever la plaque de sa gaine.
   Pour enlever la lampe montrée à la Fig. 8, dessouder les connections en fondant le plomb à l'aide d'un fer à souder. (ne pas utiliser vos doigts pour enlever la lampe. Vous pourriez vous blesser.)
   La lampe de remplacement sont disponibles à notre service de pièces détachèes. Il n'est pas necessaire de la fixer avea un adhesif.
5. **ATTENTION-Changement d'un transistor de puissance**
   Pour échanger un transistor de puissance (Q703, 704) à la suite d'une détérioration,vérifier l'état de fonctionnement des autres transistors.
   Attention car ils peuvent être détériorés en réaction à la détérioration du transistor à changer.
6. **ATTENTION-Quand vous changer le filtre céramique FM**
   Les filtres céramiques FM (MF201–203) se differentient par leur couleur: rouge, bleu et orange suivant le degré de précision de leurs caractéristiques. Remplacer MF201–203 par des filtres de la même couleur lorsque vous procédez à l'échange.
   Dans notre service de piéces, MF201–203 sont placés ensemble.

www.hifiengine.com

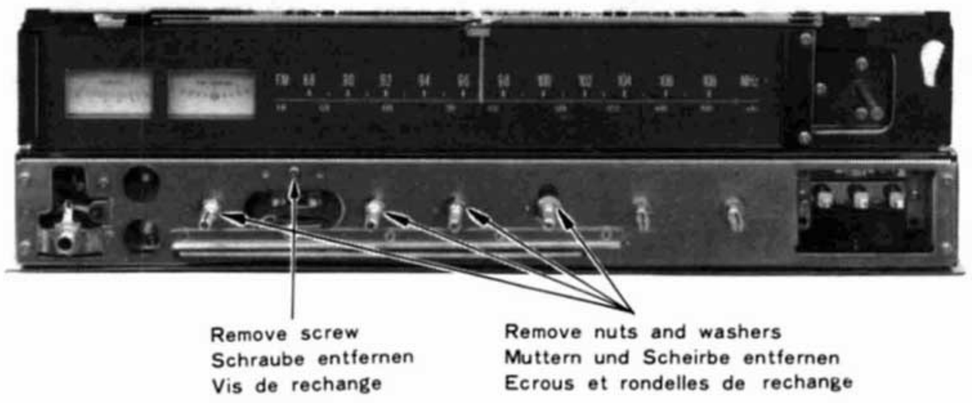

Fig. 3
Abb. 3

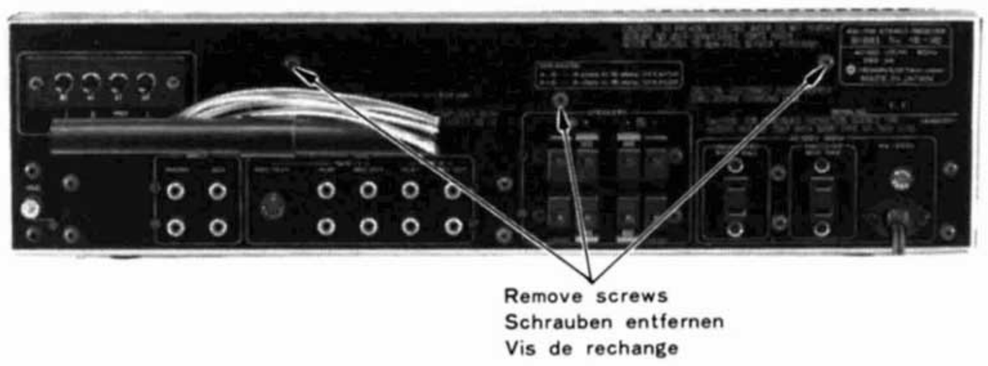

Fig. 6
Abb. 6

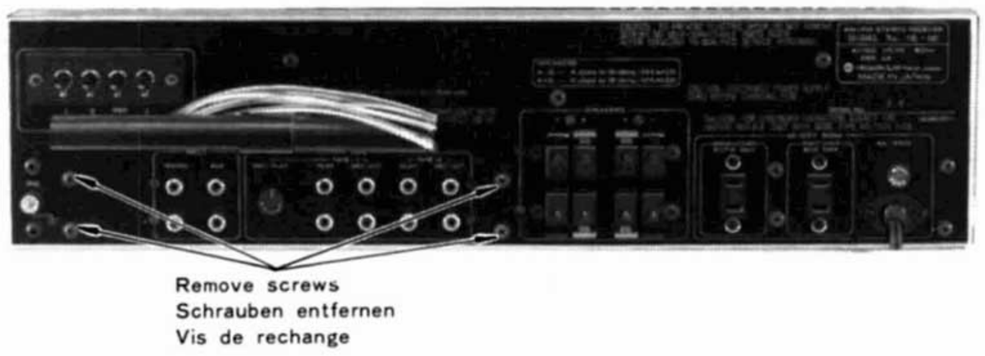

Fig. 4
Abb. 4

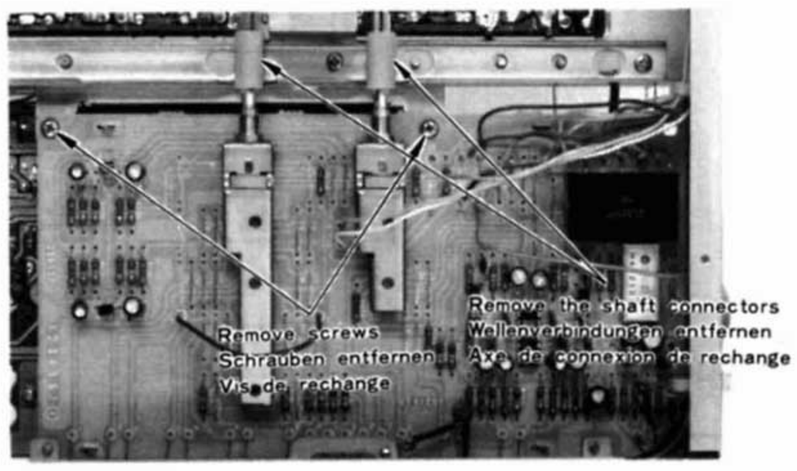

Fig. 7
Abb. 7

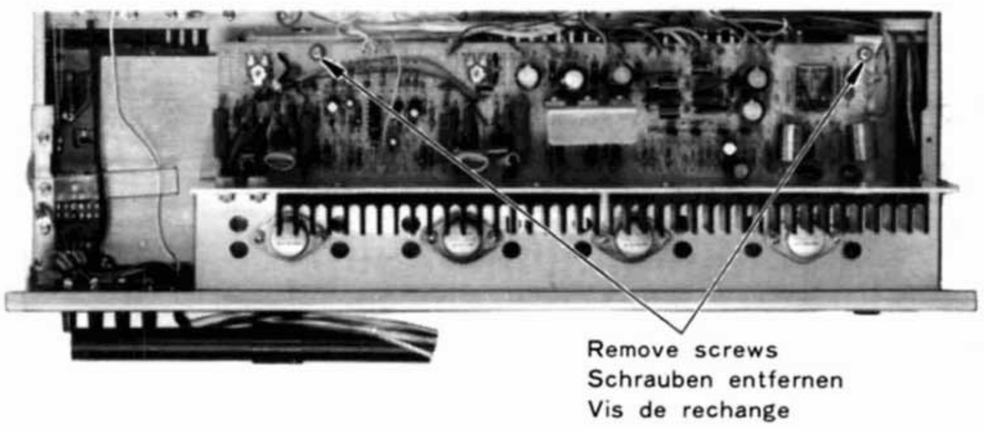

Fig. 5
Abb. 5

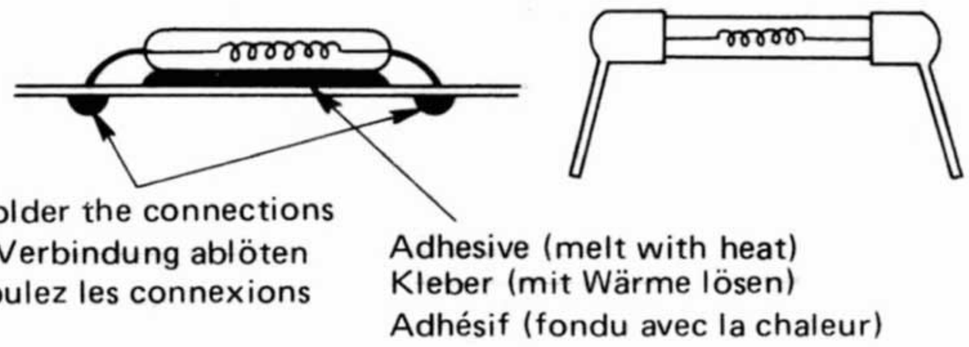

Fig. 8 Abb. 8

Fig. 9 Abb. 9

4. DIAL CORD SETTING, SKALENSEILEINSTELL NG, EQUIPEMENT DE CADRAN

Note: The dial pulley shows the position that the variable condenser is turned to the counterclockwise direction.

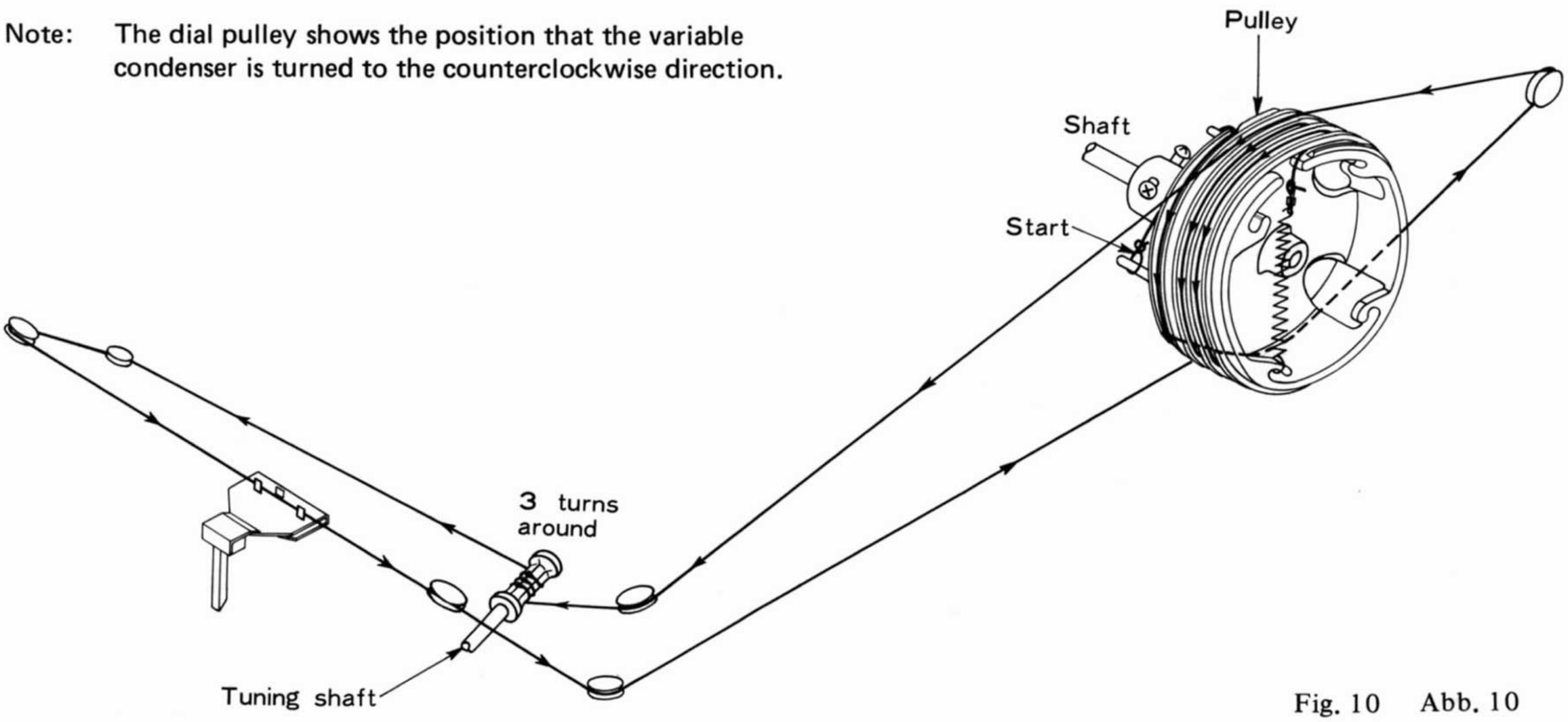

Fig. 10 Abb. 10

www.hifiengine.com

5. GENERAL ALIGNMENT INSTRUCTION, ALLGEMEINE AUSRICHT-ANLEITUG, INSTRUCTION GENERALE

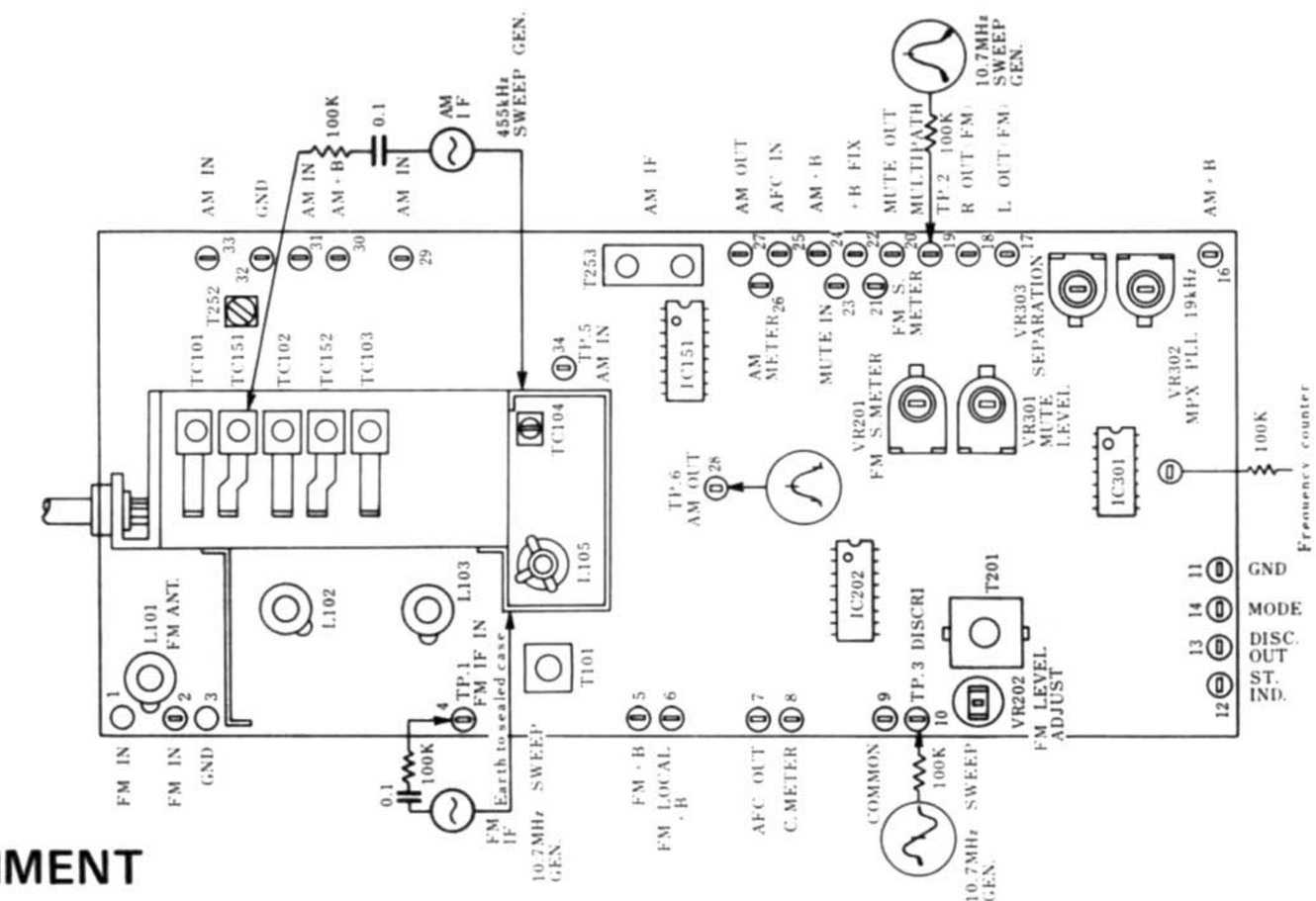

Fig. 11
Abb. 11

5.1 FM TUNER ALIGNMENT

Steps		Item	Measuring Instrument	Input Terminal	Output Terminal	Frequency	Adjust	Wave Form
1	(1)	IF Amplifier	10.7MHz ± 150kHz Sweep Generator	TP 1	TP 2		T101	CAUTION (1)
	(2)	"S" curve		TP 1	TP 3		T201	CAUTION (2)
2	(1)	Covering	2.1 FM signal generator 90MHz 400Hz 100% modulated, 60dB at input V.T.V.M.	Antenna terminal	TAPE OUT (L) or SP OUT (L)	90MHz (Turn the dial pointer at 90MHz)	L105	Output Max.
	(2)		2.2 FM signal generator 106MHz 400Hz 100% modulated, 60dB at input V.T.V.M.			106MHz (Turn the dial pointer at 106MHz)	TC104	
	(3)							Repeat (1) & (2)
3	(1)	Tracking	3.1 FM signal generator 90MHz 400Hz 100% modulated, 10dB at input V.T.V.M.	Antenna terminal	TAPE OUT (L) or SP OUT (L)	90MHz	L101, L102 L103	Output Max.
	(2)		3.2 FM signal generator 106MHz 400Hz 100% modulated, 10dB at input V.T.V.M.			106MHz	TC101, TC102 TC103	
	(3)							Repeat (1) & (2)
4		Discriminate	FM signal generator 100MHz 400Hz 100% modulated, 10dB at input V.T.V.M.	Antenna terminal	TAPE OUT (L) or SP OUT (L)	100MHz	T201 (lower)	Cut the input signal level of FM signal generator and set the pointer of tuning meter to the center mark.
5		Distortion	FM signal generator 100MHz 400Hz 100% modulated, 60dB at input Distortion meter	Antenna terminal	TAPE OUT (L) or SP OUT (L)	100MHz	T201 (upper)	Adjust T201 so that distortion will become min. CAUTION (3)
6		Output	FM signal generator 98MHz 400Hz 30% modulated, 60dB at input V.T.V.M.	Antenna terminal	TAPE OUT (L)	98MHz	VR202	150mV ± 1dB
7		FM Muting	FM signal generator 98MHz 400Hz 100% modulated, 20dB at input V.T.V.M.	Antenna terminal	TAPE OUT (L) or SP OUT (L)	98MHz	VR301	Adjust VR301 so that the output signal can occur then the input signal is 24 ± 6dB.
8		Signal Meter	Same as step 4	Antenna terminal	Signal Meter	98MHz	VR201	Adjust VR201 so that the pointer of signal meter will be 4 – 5.

www.hifiengine.com

CAUTION

1. Short-circuit the OSC stage by earthing the live side of the variable capacitor in that stage. Adjust the core of T101 so that the gain will be max. In this case, reduce the level of the input signal of signal generator so that the waveform will be one shown in Fig. 12.
2. Short-circuit the OSC stage as described in Caution 1. Adjust the primary core (lower) of T101 so that the output is like the S curve shown in Fig. 13 with A and B symmetrical with respect to C.
   Adjust the secondary core (upper) so that the straight line of the S curve can be achieved.
   At the time of adjustment in Caution 1 and 2, center of the marker will sometimes not correspond to that of the waveform because of the ceramic filters used.

Fig. 12

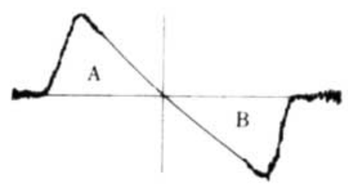

Fig. 13

3. As the result of the adjustment step 5, the best point of adjustment from step 4 will be shifted a bit. Repeat the adjustment of step 4 and 5 until the deterioration becomes minimum and the pointer of the tuning meter is in its center.

5.2 FM MPX ALIGNMENT

Steps		Item	Measuring Instrument	Input Terminal	Output Terminal	Frequency	Adjust	Wave Form
1	(1)	Separation	1. FM signal generator 100MHz, 60dB at input 2. Stereo signal generator Main signal 92% modulated Pilot signal 8% modulated V. T.V.M.	Antenna terminal	TAPE OUT (L) or SP OUT (L)	100MHz	VR303	After making the signal of Rch and Pilot, adjust VR303 so that the output wave form of Lch becomes min.
	(2)							Optimize VR303 so that the leak level of the Lch signal is equal to that of the Rch signal.
2		19kHz Free Running Frequency	FM signal generator 98MHz non-modulated 60dB at input V.T.V.M. Frequency counter	Antenna terminal	TP 4	98MHz	VR302	Adjust VR302 so that the counter will indicated 19kHz± 30Hz.

www.hifiengine.com

5.3 AM TUNER ALIGNMENT

Steps		Item	Measuring Instrument	Input Terminal	Output Terminal	Frequency	Adjust	Wave Form
1		IF Amplifier	Sweep generator 455kHz	TC 151	TP 6		T253	Gain Max. CAUTION (4)
2	(1)	Covering	AM signal generator 600kHz 400Hz 30% modulated, 50dB at input V.T.V.M.	Ferrite antenna	TAPE OUT or SP OUT	600kHz	T252	Gain Max. CAUTION (5)
	(2)		AM signal generator 1400kHz 400Hz 30% modulated, 50dB at input V.T.V.M.			1400kHz	TC152	
	(3)							Repeat (1) and (2)
3	(1)	Tracking	AM signal generator 600kHz 400Hz 30% modulated, 50dB at input V.T.V.M.	Ferrite antenna	TAPE OUT or SP OUT	600kHz	Ferrite antenna	Gain Max. CAUTION (5)
	(2)		AM signal generator 1400kHz 400Hz 30% modulated, 50dB at input V.T.V.M.			1400kHz	TC151	
	(3)							Repeat (1) and (2)

4. In item 1, set the capacitance of the variable capacitor to minimum and adjust red and blue cores of T253 so that the waveform is as shown in Fig. 14. As T253 contains a 455kHz ceramic filter, sometimes the center of the marker will not correspond to that of the waveform.
   In this case, neglect the marker. After adjusting as above, increase the output level of the sweep generator and adjust T253 again so that the top of the waveform A (indicated in Fig. 15) will be flat and wide.
5. In items 2 and 3, at the time of first adjustment, set input power at 74dB and adjust obtaining the minimum necessary input power (50dB).

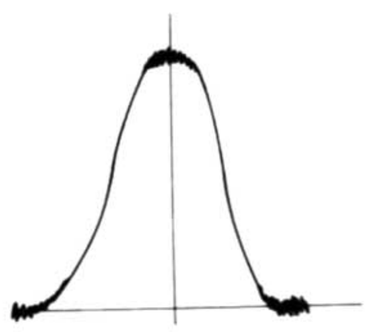

Fig. 14
Abb. 14

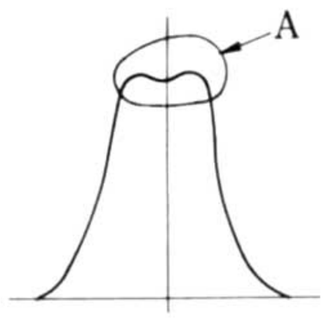

Fig. 15
Abb. 15

5.4 AUDIO CIRCUIT ALIGNMENT

Item	Measuring Instrument	Point to be Measured	Adjust	Value Adjusted
Idle Current	DC volt meter	R713 L,R	VR701 L,R	20±10mV (40±20mA)

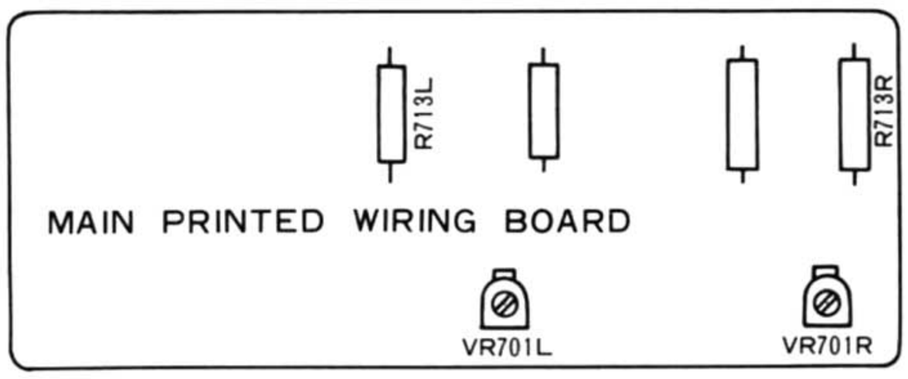

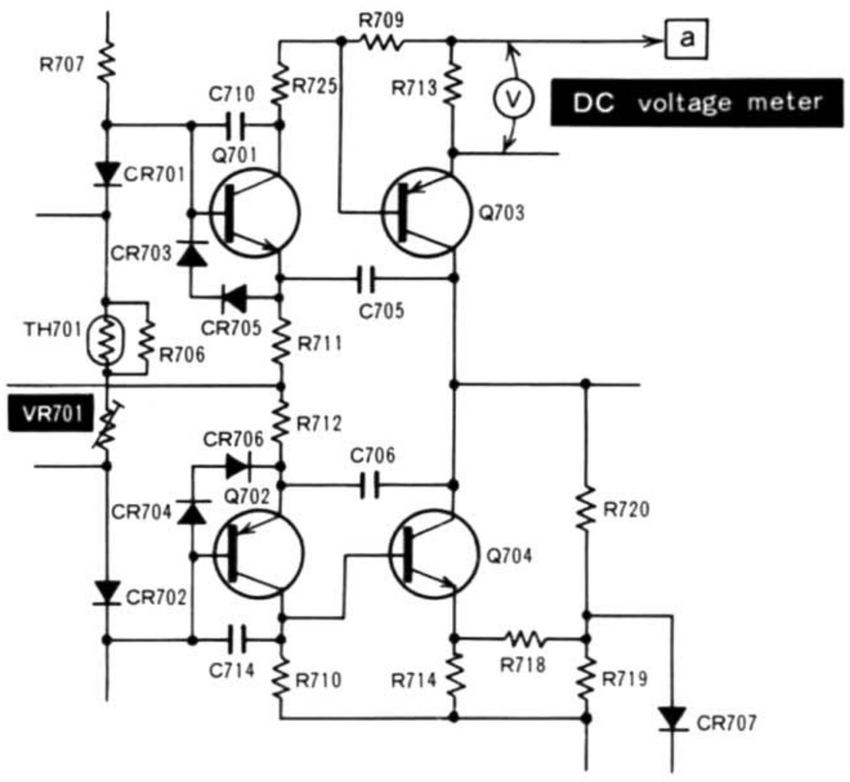

(This figure shows L channel only.)

www.hifiengine.com

6. PRINTED WIRING BOARD, PRINTPLATTEN, PLAN DE BASE

TUNER PRINTED WIRING BOARD

The terminal No. shows the stamp on the printed wiring board. This number matches the number in the circuit diagram.

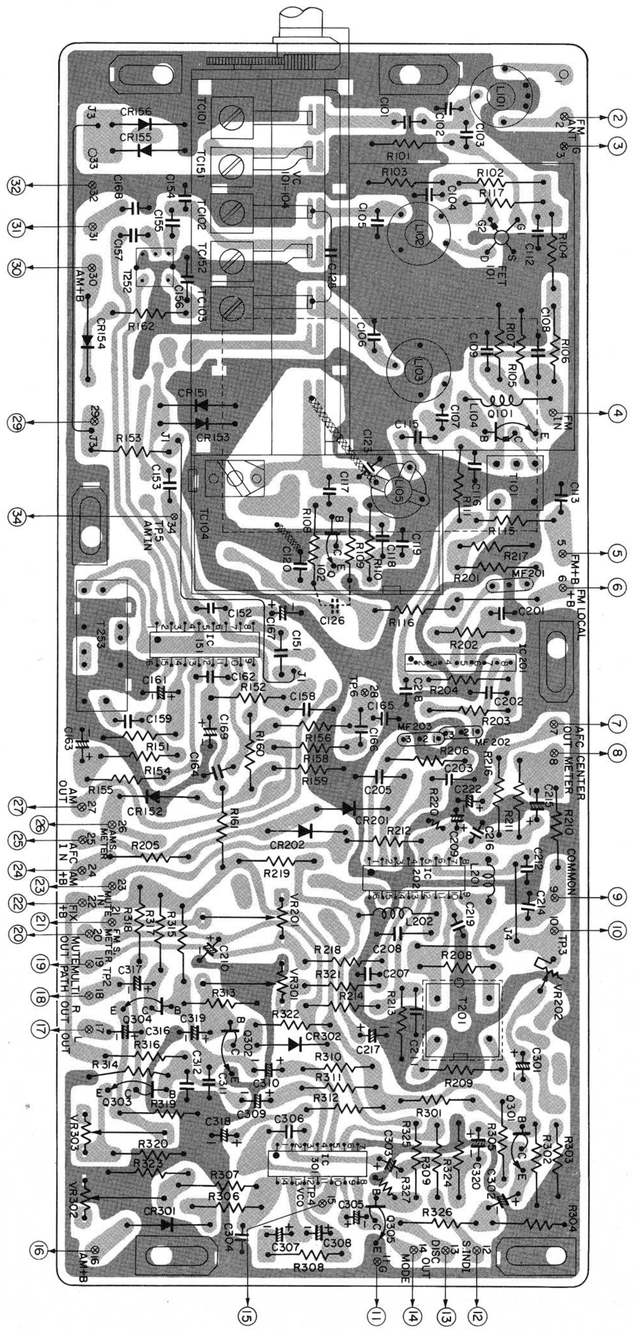

EQUALIZER PRINTED WIRING BOARD

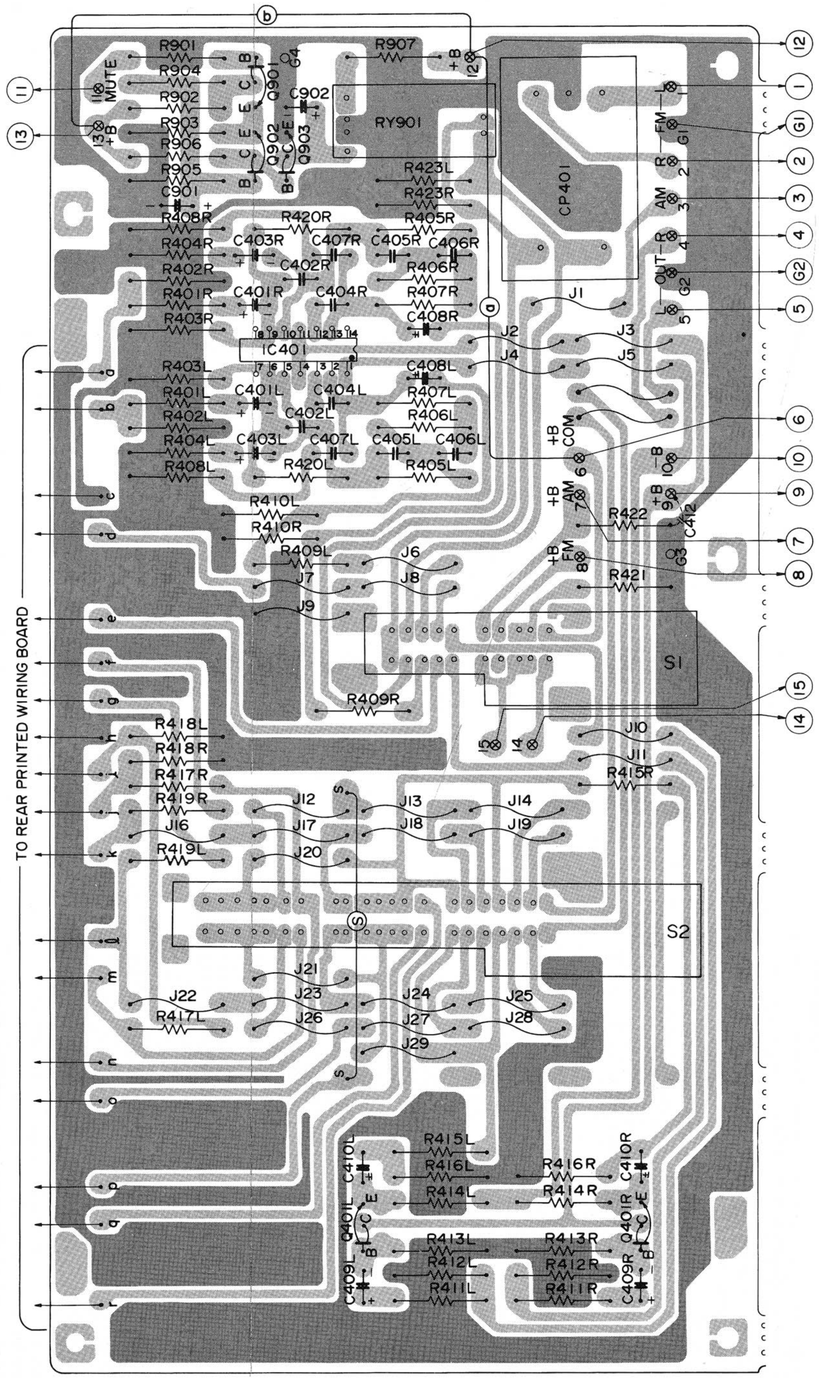

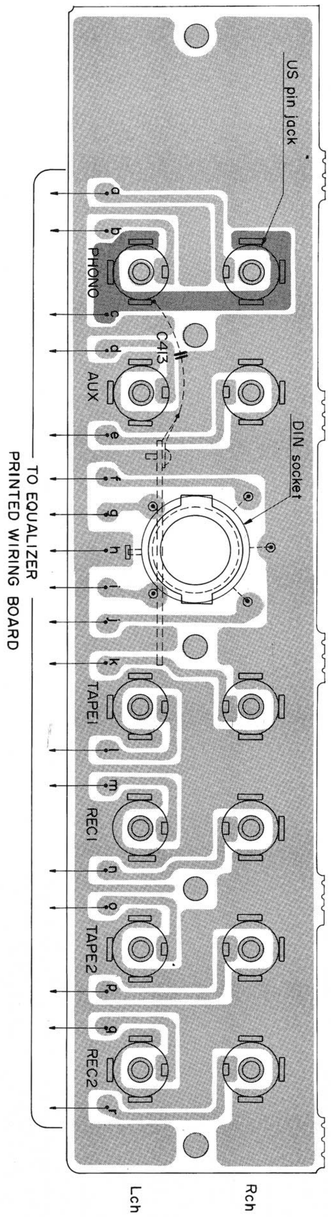

MAIN PRINTED WIRING BOARD

The terminal No. shows the stamp on the printed wiring board.
This number matches the number in the circuit diagram.

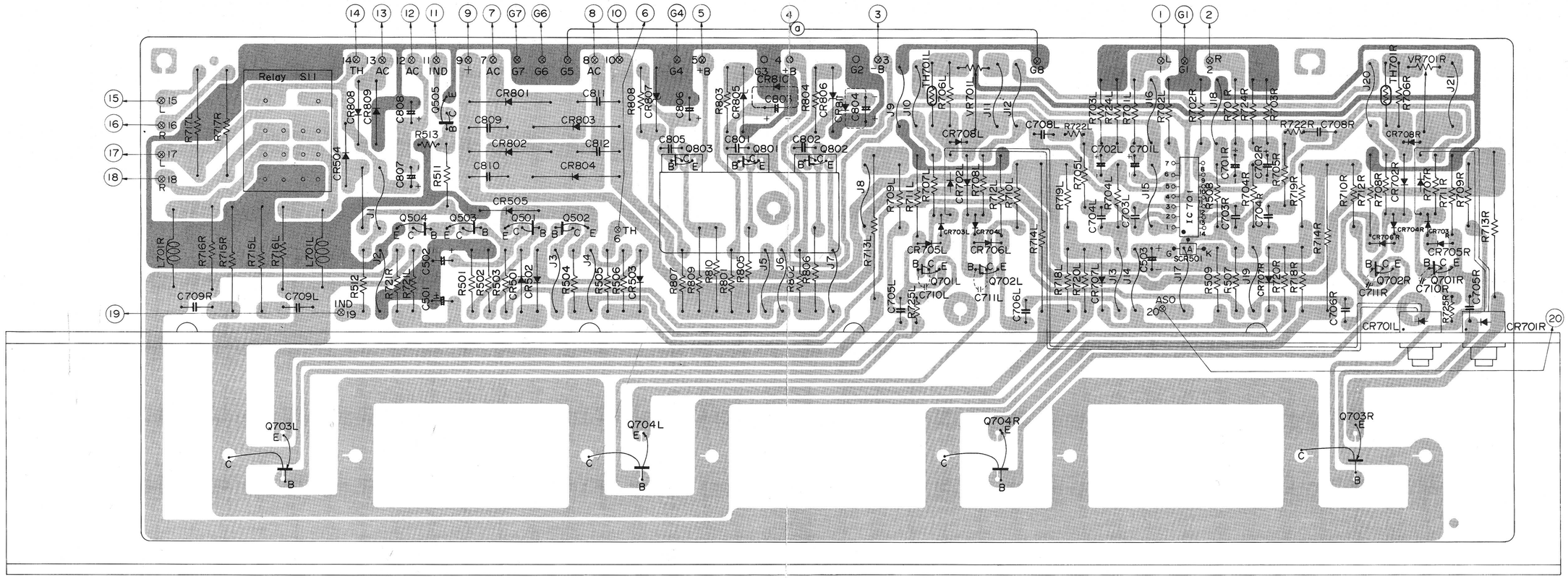

PRE - TONE PRINTED WIRING BOARD

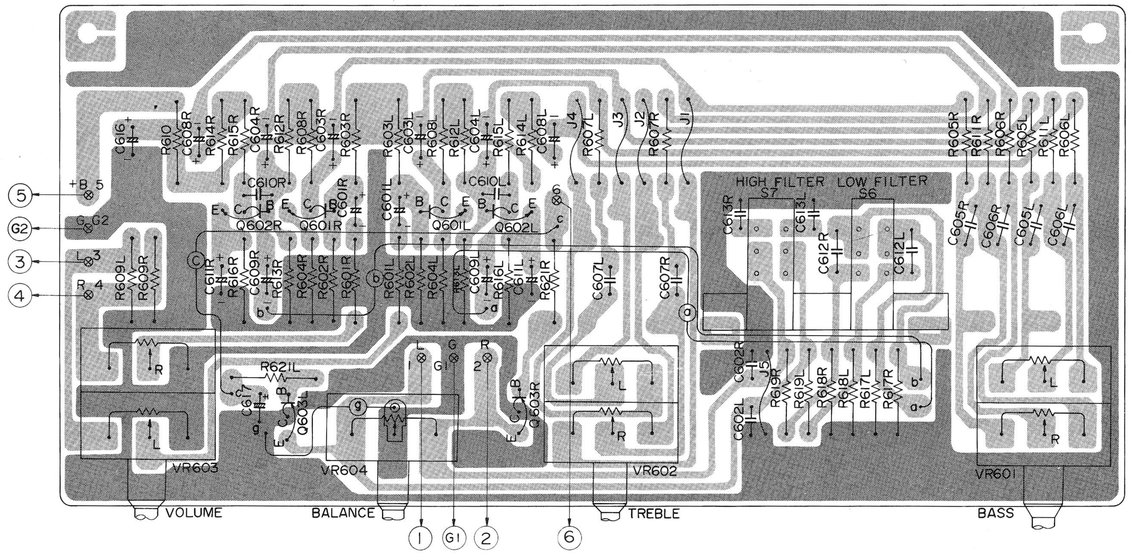

SWITCH PRINTED WIRING BOARD

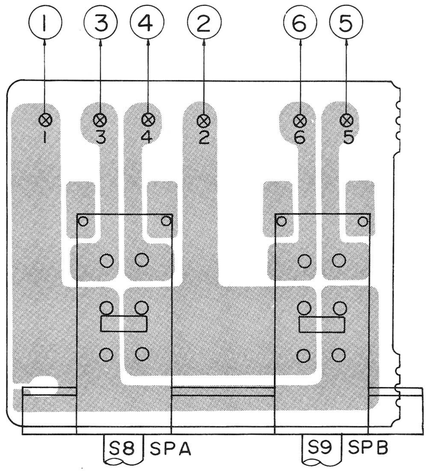

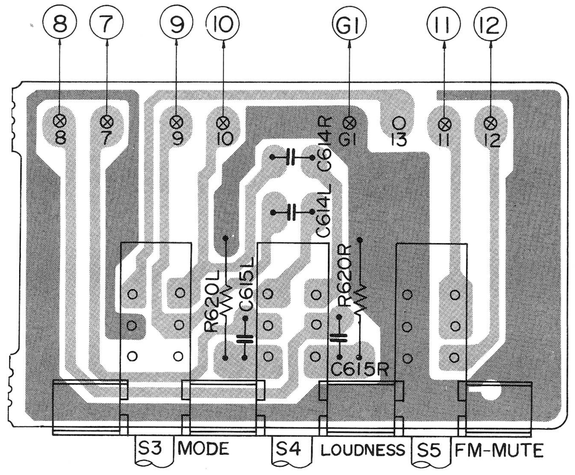

7. CIRCUIT DIAGRAM, SCHALTPLAN, PLAN DE CIRCUIT

The circuit diagram is subject to change for improvement without notice.

TUNER CIRCUIT DIAGRAM

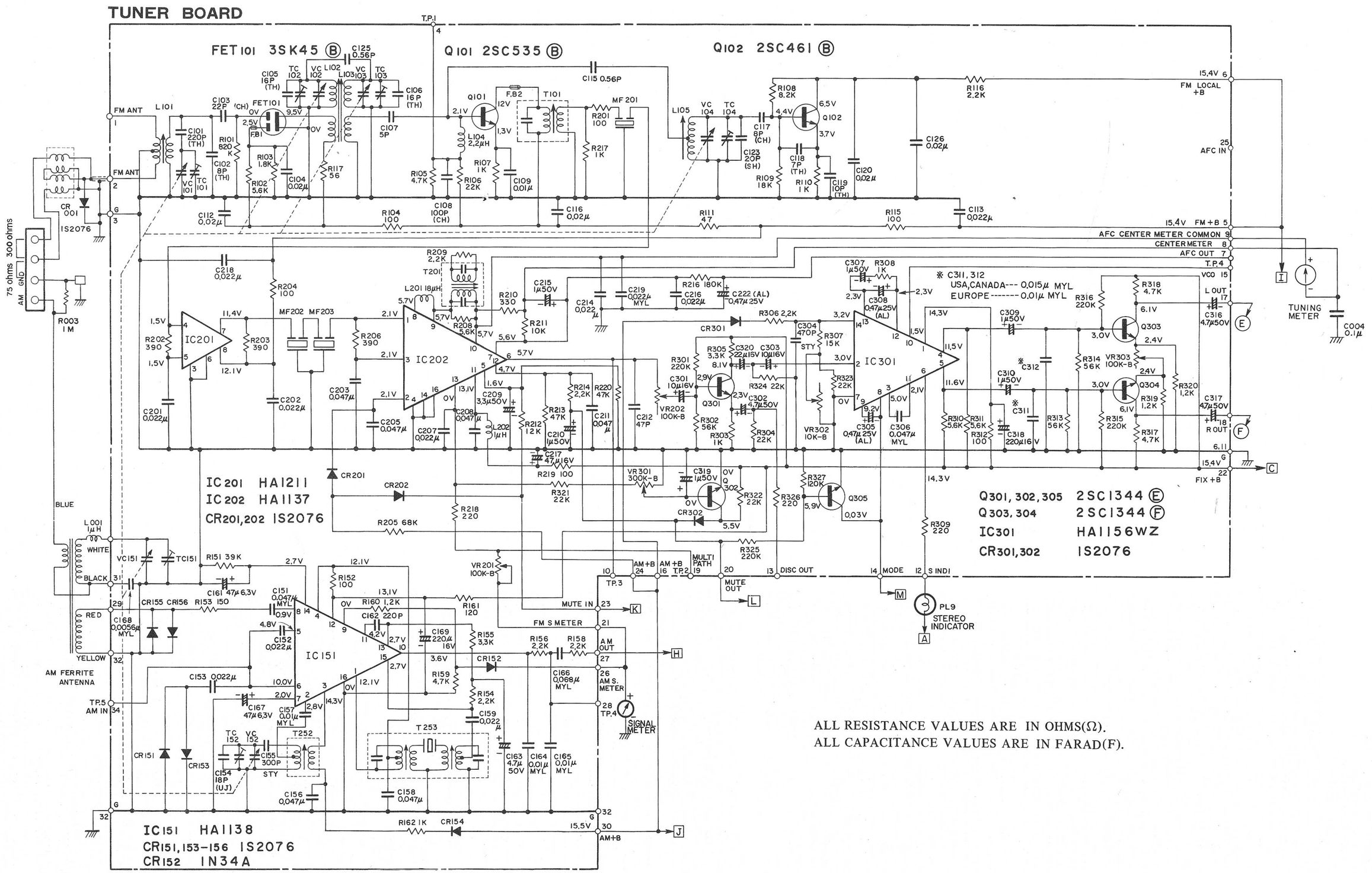

ALL RESISTANCE VALUES ARE IN OHMS(Ω).
ALL CAPACITANCE VALUES ARE IN FARAD(F).

MODEL SR-802 SERVICE MANUAL
MODELL SR-802 SERVICE ANLEITUNG
MODÈLE SR-802 SERVICE MANUAL

AUDIO CIRCUIT DIAGRAM

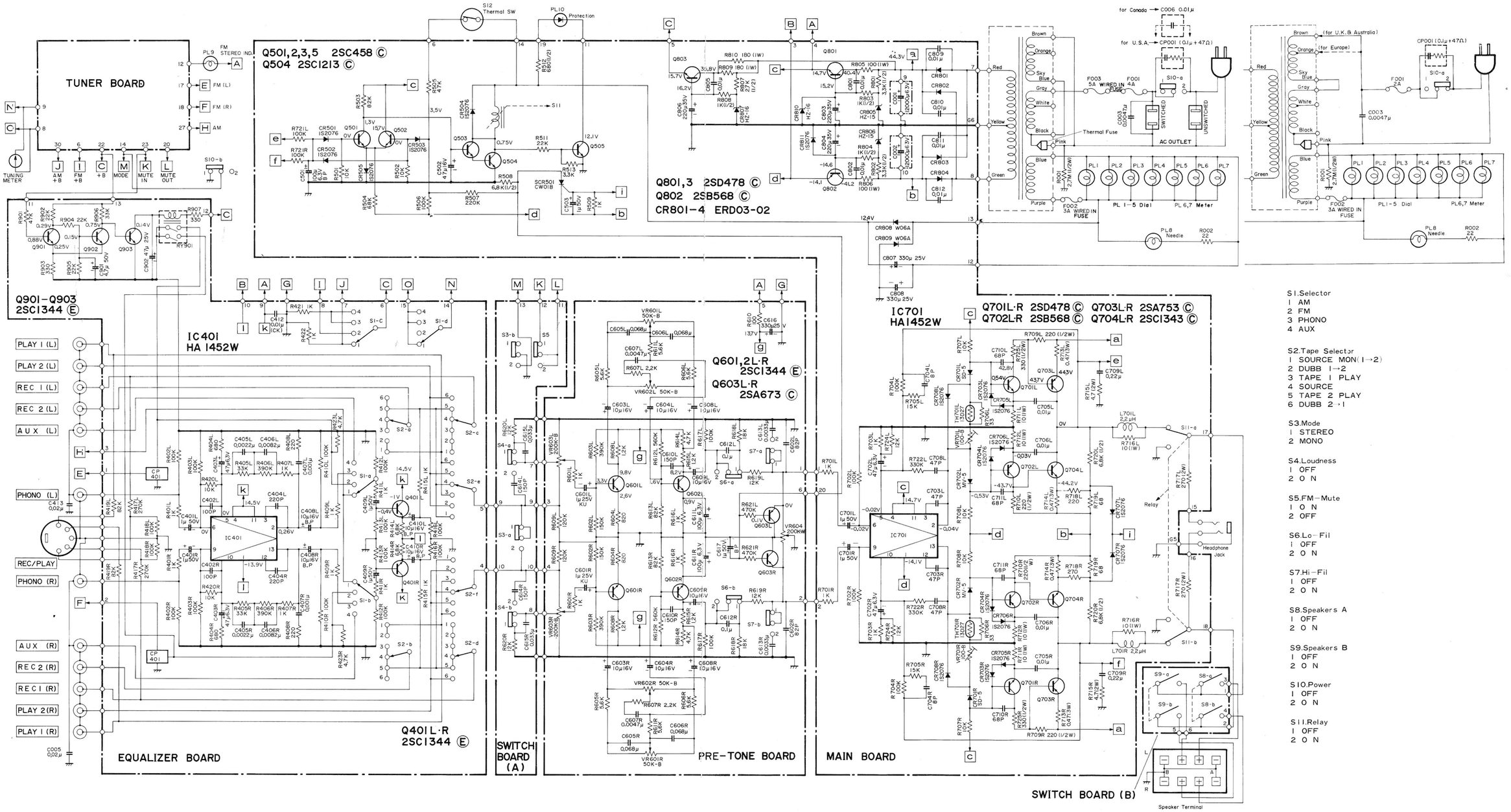

ALL RESISTANCE VALUES ARE IN OHMS (Ω).
ALL CAPACITANCE VALUES ARE IN FARAD(F).

8. REPLACEMENT PARTS LIST, ERSATZTEILLISTE, TABLEAU DES PIÈCE

CAPACITORS

for TUNER PRINTED WIRING BOARD

SYMBOL NO.	STOCK NO.	DESCRIPTION			
C101	0248362	Ceramic, discal	220pF	±5%	50V
C102	0248308	Ceramic, discal	8pF	±0.25pF	50V
C103	0246448	Ceramic, discal	22pF	±5%	50V
C104	0245018	Ceramic, discal	0.02μF	+80% −20%	25V
C105	0248335	Ceramic, discal	16pF	±5%	50V
C106	0248335	Ceramic, discal	16pF	±5%	50V
C107	0248635	Ceramic, discal	5pF	±0.25pF	10V
C108	0246464	Ceramic, discal	100pF	±5%	50V
C109	0245017	Ceramic, discal	0.01μF	+80% −20%	25V
C112	0245018	Ceramic, discal	0.02μF	+80% −20%	25V
C113	0245018	Ceramic, discal	0.02μF	+80% −20%	25V
C115	0231185	Ceramic, discal	0.56pF	±5%	500V
C116	0245018	Ceramic, discal	0.02μF	+80% −20%	25V
C117	0246418	Ceramic, discal	8pF	±0.25pF	50V
C118	0248307	Ceramic, discal	7pF	±0.25pF	50V
C119	0248310	Ceramic, discal	10pF	±0.25pF	50V
C120	0245018	Ceramic, discal	0.02μF	+80% −20%	25V
C123	0248177	Ceramic, discal	20pF	±5%	50V
C125	0231185	Ceramic, discal	0.56pF	±5%	500V
C126	0245018	Ceramic, discal	0.02μF	+80% −20%	25V
C151	0275015	Mylar, film	0.047μF	±10%	50V
C152	0245018	Ceramic, discal	0.022μF	+80% −20%	25V
C153	0245018	Ceramic, discal	0.022μF	+80% −20%	35V
C154	0248496	Ceramic, discal	18pF	±5%	50V
C155	0228322	Styrol	300pF	±5%	50V
C156	0244175	Ceramic, discal	0.047μF	+80% −20%	25V
C157	0275011	Mylar, film	0.01μF	±10%	50V
C158	0244175	Ceramic, discal	0.047μF	+80% −20%	25V
C159	0245018	Ceramic, discal	0.022μF	+80% −20%	25V
C161	0252225	Electrolytic	47μF		6.3V
C162	0248692	Ceramic, discal	220pF	±5%	50V
C163	0252815	Electrolytic	4.7μF		50V
C164	0275011	Mylar, film	0.01μF	±10%	50V
C165	0275011	Mylar, film	0.01μF	±10%	50V
C166	0275016	Mylar, film	0.068μF	±10%	50V
C167	0252225	Electrolytic	47μF		6.3V
C168	1274235	Mylar, film	5600pF	±5%	50V
C169	0252532	Electrolytic	220μF		16V
C201	0245018	Ceramic, discal	0.022μF	+80% −20%	25V
C202	0245018	Ceramic, discal	0.022μF	+80% −20%	25V
C203	0244175	Ceramic, discal	0.047μF	+80% −20%	25V
C205	0244175	Ceramic, discal	0.047μF	+80% −20%	25V
C207	0245018	Ceramic, discal	0.022μF	+80% −20%	25V
C208	0244175	Ceramic, discal	0.047μF	+80% −20%	25V
C209	0252813	Electrolytic	3.3μF		50V
C210	0252811	Electrolytic	1μF		50V
C211	0244175	Ceramic, discal	0.047μF	+80% −20%	25V
C212	0248676	Ceramic, discal	47pF	±5%	50V
C214	0245018	Ceramic, discal	0.022μF	+80% −20%	25V
C215	0252811	Electrolytic	1μF		50V
C216	0245018	Ceramic, discal	0.022μF	+80% −20%	25V
C217	0252525	Electrolytic	47μF		16V
C218	0245018	Ceramic, discal	0.022μF	+80% −20%	25V
C219	0275013	Mylar, film	0.022μF	±10%	50V
C222	0251925	Aluminum solid	0.47μF	±10%	25V
C301	0252521	Electrolytic	10μF		16V
C302	0252815	Electrolytic	4.7μF		50V
C303	0252521	Electrolytic	10μF		16V
C304	0221522	Mylar, film	470pF	±5%	50V
C305	0251925	Aluminum solid	0.47μF	±10%	25V
C306	0275015	Mylar, film	0.047μF	±10%	50V
C307	0252811	Electrolytic	1μF		50V
C308	0251925	Aluminum solid	0.47μF	±10%	25V
C309	0252811	Electrolytic	1μF		50V
C310	0252811	Electrolytic	1μF		50V
C311	0275212	Mylar, film (for U.S.A. & Canada)	0.015μF	±5%	50V
C311	0275211	Mylar, film (for Europe & England)	0.01μF	±5%	50V
C312	0275212	Mylar, film (for U.S.A. & Canada)	0.015μF	±5%	50V
C312	0275211	Mylar, film (for Europe & England)	0.01μF	±5%	50V
C316	0252815	Electrolytic	4.7μF		50V
C317	0252815	Electrolytic	4.7μF		50V
C318	0252532	Electrolytic	220μF		16V
C319	0252811	Electrolytic	1μF		50V
C320	0252522	Electrolytic	22μF		16V

for EQUALIZER PRINTED WIRING BOARD

SYMBOL NO.	STOCK NO.	DESCRIPTION			
C401(L,R)	0252811	Electrolytic	1μF		50V
C402(L,R)	0248684	Ceramic, discal	100pF	±5%	50V
C403(L,R)	0252225	Electrolytic	47μF		6.3V
C404(L,R)	0248732	Ceramic, discal	220pF	±10%	50V
C405(L,R)	0274013	Mylar, film	2200pF	±10%	50V
C406(L,R)	0274036	Mylar, film	8200pF	±10%	50V
C407(L,R)	0274011	Mylar, film	1000pF	±10%	50V
C408(L,R)	0257145	Electrolytic	10μF		16V
C409(L,R)	0252811	Electrolytic	1μF		50V
C410(L,R)	0257145	Electrolytic	10μF		16V
C412	0245017	Ceramic, discal	0.01μF	+80% −20%	50V
C413	0245018	Ceramic, discal	0.02μF	+80% −20%	25V
C901	0252815	Electrolytic	4.7μF		50V
C902	0252625	Electrolytic	47μF		25V

for PRE-TONE PRINTED WIRING BOARD

SYMBOL NO.	STOCK NO.	DESCRIPTION			
C601(L,R)	0252602	Electrolytic	1μF		25V
C602(L,R)	0248722	Ceramic, discal	82pF	±10%	50V
C603(L,R)	0252521	Electrolytic	10μF		16V
C604(L,R)	0252521	Electrolytic	10μF		16V
C605(L,R)	0275016	Mylar, film	0.068μF	±10%	50V
C606(L,R)	0275016	Mylar, film	0.068μF	±10%	50V
C607(L,R)	0274015	Mylar, film	4700pF	±10%	50V
C608(L,R)	0252521	Electrolytic	10μF		16V
C609(L,R)	0252521	Electrolytic	10μF		16V
C610(L,R)	0248728	Ceramic, discal	150pF	±10%	50V
C611(L,R)	0252231	Electrolytic	100μF		6.3V
C612(L,R)	0276011	Mylar, film	0.1μF	±10%	50V

www.hifiengine.com

SYMBOL NO.	STOCK NO.	DESCRIPTION			
C613(L,R)	0274014	Mylar, film	3300pF	±10%	50V
C616	0252633	Electrolytic	330μF		25V
C617	0257181	Electrolytic	1μF		50V
for SWITCH PRINTED WIRING BOARD					
C614(L,R)	0228315	Styrol	150pF	±5%	50V
C615(L,R)	0275014	Mylar, film	0.033μF	±10%	50V
for MAIN PRINTED WIRING BOARD					
C501	0257109	Electrolytic	100μF		6.3V
C502	0252525	Electrolytic	47μF		16V
C503	0252811	Electrolytic	1μF		50V
C701(L,R)	0252811	Electrolytic	1μF		50V
C702(L,R)	0252225	Electrolytic	47μF		6.3V
C703(L,R)	0248676	Ceramic, discal	47pF	±5%	50V
C704(L,R)	0248676	Ceramic, discal	8pF	±0.5pF	50V
C705(L,R)	0275011	Mylar, film	0.01μF	±10%	50V
C706(L,R)	0275011	Mylar, film	0.01μF	±10%	50V
C708(L,R)	0248676	Ceramic, discal	47pF	±5%	50V
C709(L,R)	0276213	Mylar, film	0.22μF	±10%	50V
C710(L,R)	0248720	Ceramic, discal	68pF	±10%	50V
C711(L,R)	0248720	Ceramic, discal	68pF	±10%	50V
C801	0275011	Mylar, film	0.01μF	±10%	50V
C802	0275011	Mylar, film	0.01μF	±10%	50V
C803	0252732	Electrolytic	220μF		35V
C804	0252732	Electrolytic	220μF		35V
C805	0275011	Mylar, film	0.01μF	±10%	50V
C806	0252732	Electrolytic	220μF		35V
C807	0252633	Electrolytic	330μF		25V
C808	0252633	Electrolytic	330μF		25V
C809	0245408	Ceramic, discal	0.01μF	±20%	500V
C810	0245408	Ceramic, discal	0.01μF	±20%	500V
C811	0245408	Ceramic, discal	0.01μF	±20%	500V
C812	0245408	Ceramic, discal	0.01μF	±20%	500V
for CHASSIS ASSEMBLY					
C001	0250631	Electrolytic	12000μF		63V
C002	0250631	Electrolytic	12000μF		63V
C003	0243875	Ceramic, discal	4700pF	±20%	250V
	(for Europe & England)				
C003	0243873	Ceramic, discal	4700pF	+80% −20%	500V
	(for U.S.A. & Canada)				
C004	0246007	Ceramic, discal	0.1μF	+80% −20%	25V
C005	0245018	Ceramic, discal	0.02μF	+80% −20%	25V
C006	0243876	Ceramic, discal	0.01μF	±20%	250V
	(only for Canada)				

RESISTORS

SYMBOL NO.	STOCK NO.	DESCRIPTION			
for TUNER PRINTED WIRING BOARD					
R101	0114303	Carbon film	820kΩ	±5%	SRD¼P
R102	0114179	Carbon film	5.6kΩ	±5%	SRD¼P
R103	0114167	Carbon film	1.8kΩ	±5%	SRD¼P
R104	0114131	Carbon film	100Ω	±5%	SRD¼P
R105	0114177	Carbon film	4.7kΩ	±5%	SRD¼P
R106	0114209	Carbon film	22kΩ	±5%	SRD¼P
R107	0114161	Carbon film	1kΩ	±5%	SRD¼P
R108	0114183	Carbon film	8.2kΩ	±5%	SRD¼P
R109	0114207	Carbon film	18kΩ	±5%	SRD¼P
R110	0114161	Carbon film	1kΩ	±5%	SRD¼P
R111	0114057	Carbon film	47Ω	±5%	SRD¼P
R115	0114131	Carbon film	100Ω	±5%	SRD¼P
R116	0114169	Carbon film	2.2kΩ	±5%	SRD¼P
R117	0114059	Carbon film	56Ω	±5%	SRD¼P
R151	0114215	Carbon film	39kΩ	±5%	SRD¼P
R152	0114131	Carbon film	100Ω	±5%	SRD¼P
R153	0114135	Carbon film	150Ω	±5%	SRD¼P
R154	0114169	Carbon film	2.2kΩ	±5%	SRD¼P
R155	0114173	Carbon film	3.3kΩ	±5%	SRD¼P
R156	0114169	Carbon film	2.2kΩ	±5%	SRD¼P
R158	0114169	Carbon film	2.2kΩ	±5%	SRD¼P
R159	0114177	Carbon film	4.7kΩ	±5%	SRD¼P
R160	0114163	Carbon film	1.2kΩ	±5%	SRD¼P
R161	0114133	Carbon film	120Ω	±5%	SRD¼P
R162	0114161	Carbon film	1kΩ	±5%	SRD¼P
R201	0114131	Carbon film	100Ω	±5%	SRD¼P
R202	0114145	Carbon film	390Ω	±5%	SRD¼P
R203	0114145	Carbon film	390Ω	±5%	SRD¼P
R204	0114131	Carbon film	100Ω	±5%	SRD¼P
R205	0114221	Carbon film	68kΩ	±5%	SRD¼P
R206	0114145	Carbon film	390Ω	±5%	SRD¼P
R208	0114179	Carbon film	5.6kΩ	±5%	SRD¼P
R209	0114169	Carbon film	2.2kΩ	±5%	SRD¼P
R210	0114143	Carbon film	330Ω	±5%	SRD¼P
R211	0114201	Carbon film	10kΩ	±5%	SRD¼P
R212	0114203	Carbon film	12kΩ	±5%	SRD¼P
R213	0114217	Carbon film	47kΩ	±5%	SRD¼P
R214	0114169	Carbon film	2.2kΩ	±5%	SRD¼P
R216	0114287	Carbon film	180kΩ	±5%	SRD¼P
R217	0114161	Carbon film	1kΩ	±5%	SRD¼P
R218	0114139	Carbon film	220Ω	±5%	SRD¼P
R219	0114131	Carbon film	100Ω	±5%	SRD¼P
R220	0138177	Composition	47kΩ	±5%	RC½GF
R301	0114289	Carbon film	220kΩ	±5%	SRD¼P
R302	0114219	Carbon film	56kΩ	±5%	SRD¼P
R303	0114161	Carbon film	1kΩ	±5%	SRD¼P
R304	0114209	Carbon film	22kΩ	±5%	SRD¼P
R305	0114173	Carbon film	3.3kΩ	±5%	SRD¼P
R306	0114169	Carbon film	2.2kΩ	±5%	SRD¼P
R307	0114205	Carbon film	15kΩ	±5%	SRD¼P
R308	0114161	Carbon film	1kΩ	±5%	SRD¼P
R309	0114139	Carbon film	220Ω	±5%	SRD¼P
R310	0114179	Carbon film	5.6kΩ	±5%	SRD¼P
R311	0114179	Carbon film	5.6kΩ	±5%	SRD¼P
R312	0114131	Carbon film	100Ω	±5%	SRD¼P
R313	0114219	Carbon film	56kΩ	±5%	SRD¼P
R314	0114219	Carbon film	56kΩ	±5%	SRD¼P
R315	0114289	Carbon film	220kΩ	±5%	SRD¼P
R316	0114289	Carbon film	220kΩ	±5%	SRD¼P
R317	0114177	Carbon film	4.7kΩ	±5%	SRD¼P
R318	0114177	Carbon film	4.7kΩ	±5%	SRD¼P
R319	0114163	Carbon film	1.2kΩ	±5%	SRD¼P
R320	0114163	Carbon film	1.2kΩ	±5%	SRD¼P
R321	0114209	Carbon film	22kΩ	±5%	SRD¼P
R322	0114209	Carbon film	22kΩ	±5%	SRD¼P
R323	0114209	Carbon film	22kΩ	±5%	SRD¼P
R324	0114209	Carbon film	22kΩ	±5%	SRD¼P
R325	0114289	Carbon film	220kΩ	±5%	SRD¼P
R326	0114139	Carbon film	220Ω	±5%	SRD¼P
R327	0138203	Composition	120kΩ	±5%	RC½GF

www.hifiengine.com

SYMBOL NO.	STOCK NO.	DESCRIPTION			
for EQUALIZER PRINTED WIRING BOARD					
R401(L,R)	0114161	Carbon film	1kΩ	±5%	SRD¼P
R402(L,R)	0114281	Carbon film	100kΩ	±5%	SRD¼P
R403(L,R)	0114281	Carbon film	100kΩ	±5%	SRD¼P
R404(L,R)	0114151	Carbon film	680Ω	±5%	SRD¼P
R405(L,R)	0114213	Carbon film	33kΩ	±5%	SRD¼P
R406(L,R)	0114295	Carbon film	390kΩ	±5%	SRD¼P
R407(L,R)	0114161	Carbon film	1kΩ	±5%	SRD¼P
R408(L,R)	0114139	Carbon film	220Ω	±5%	SRD¼P
R409(L,R)	0114161	Carbon film	1kΩ	±5%	SRD¼P
R410(L,R)	0114281	Carbon film	100kΩ	±5%	SRD¼P
R411(L,R)	0114161	Carbon film	1kΩ	±5%	SRD¼P
R412(L,R)	0114281	Carbon film	100kΩ	±5%	SRD¼P
R413(L,R)	0114281	Carbon film	100kΩ	±5%	SRD¼P
R414(L,R)	0114181	Carbon film	6.8kΩ	±5%	SRD¼P
R415(L,R)	0114161	Carbon film	1kΩ	±5%	SRD¼P
R416(L,R)	0114281	Carbon film	100kΩ	±5%	SRD¼P
R417(L,R)	0114291	Carbon film	270kΩ	±5%	SRD¼P
R418(L,R)	0114281	Carbon film	100kΩ	±5%	SRD¼P
R419(L,R)	0114223	Carbon film	82kΩ	±5%	SRD¼P
R420(L,R)	0114201	Carbon film	10kΩ	±5%	SRD¼P
R421	0114161	Carbon film	1kΩ	±5%	SRD¼P
R422	0114161	Carbon film	1kΩ	±5%	SRD¼P
R423(L,R)	0114177	Carbon film	4.7kΩ	±5%	SRD¼P
R901	0114217	Carbon film	47kΩ	±5%	SRD¼P
R902	0114209	Carbon film	22kΩ	±5%	SRD¼P
R903	0114143	Carbon film	330Ω	±5%	SRD¼P
R904	0114209	Carbon film	22kΩ	±5%	SRD¼P
R905	0114209	Carbon film	22kΩ	±5%	SRD¼P
R906	0114213	Carbon film	33kΩ	±5%	SRD¼P
R907	0114143	Carbon film	330Ω	±5%	SRD¼P
for PRE-TONE PRINTED WIRING BOARD					
R601(L,R)	0114161	Carbon film	1kΩ	±5%	SRD¼P
R602(L,R)	0114285	Carbon film	150kΩ	±5%	SRD¼P
R603(L,R)	0114295	Carbon film	390kΩ	±5%	SRD¼P
R604(L,R)	0114153	Carbon film	820Ω	±5%	SRD¼P
R605(L,R)	0114179	Carbon film	5.6kΩ	±5%	SRD¼P
R606(L,R)	0114179	Carbon film	5.6kΩ	±5%	SRD¼P
R607(L,R)	0114169	Carbon film	2.2kΩ	±5%	SRD¼P
R608(L,R)	0114163	Carbon film	1.2kΩ	±5%	SRD¼P
R609(L,R)	0114283	Carbon film	120kΩ	±5%	SRD¼P
R610	0114131	Carbon film	100Ω	±5%	SRD¼P
R611(L,R)	0114179	Carbon film	5.6kΩ	±5%	SRD¼P
R612(L,R)	0114299	Carbon film	560kΩ	±5%	SRD¼P
R613(L,R)	0114223	Carbon film	82kΩ	±5%	SRD¼P
R614(L,R)	0114177	Carbon film	4.7kΩ	±5%	SRD¼P
R615(L,R)	0114163	Carbon film	1.2kΩ	±5%	SRD¼P
R616(L,R)	0114161	Carbon film	1kΩ	±5%	SRD¼P
R617(L,R)	0114281	Carbon film	100kΩ	±5%	SRD¼P
R618(L,R)	0114207	Carbon film	18kΩ	±5%	SRD¼P
R619(L,R)	0114203	Carbon film	12kΩ	±5%	SRD¼P
R621(L,R)	0114297	Carbon film	470kΩ	±5%	SRD¼P
for SWITCH PRINTED WIRING BOARD					
R620(L,R)	0114203	Carbon film	12kΩ	±5%	SRD¼P

SYMBOL NO.	STOCK NO.	DESCRIPTION			
for MAIN PRINTED WIRING BOARD					
R501	0114201	Carbon film	10kΩ	±5%	SRD¼P
R502	0114201	Carbon film	10kΩ	±5%	SRD¼P
R503	0114223	Carbon film	82kΩ	±5%	SRD¼P
R504	0114221	Carbon film	68kΩ	±5%	SRD¼P
R505	0114217	Carbon film	47kΩ	±5%	SRD¼P
R506	0114281	Carbon film	100kΩ	±5%	SRD¼P
R507	0114289	Carbon film	220kΩ	±5%	SRD¼P
R508	0134383	Composition	6.8kΩ	±10%	RC½GF
R509	0114161	Carbon film	1kΩ	±5%	SRD¼P
R511	0114209	Carbon film	22kΩ	±5%	SRD¼P
R512	0134371	Composition	680Ω	±10%	RC½GF
R513	0138133	Composition	3.3kΩ	±5%	RC½GF
R701(L,R)	0114161	Carbon film	1kΩ	±5%	SRD¼P
R702(L,R)	0114281	Carbon film	100kΩ	±5%	SRD¼P
R703(L,R)	0114161	Carbon film	1kΩ	±5%	SRD¼P
R704(L,R)	0114281	Carbon film	100kΩ	±5%	SRD¼P
R705(L,R)	0114205	Carbon film	15kΩ	±5%	SRD¼P
R706(L,R)	0114053	Carbon film	33Ω	±5%	SRD¼P
R707(L,R)	0114201	Carbon film	10kΩ	±5%	SRD¼P
R708(L,R)	0114201	Carbon film	10kΩ	±5%	SRD¼P
R709(L,R)	0134365	Composition	220Ω	±10%	RC½GF
R710(L,R)	0134365	Composition	220Ω	±10%	RC½GF
R711(L,R)	0119041	Metal oxide	10Ω	±10%	RD1PA
R712(L,R)	0119041	Metal oxide	10Ω	±10%	RD1PA
R713(L,R)	0119237	Metal oxide	0.47Ω	±10%	RD3PA
R714(L,R)	0119237	Metal oxide	0.47Ω	±10%	RD3PA
R715(L,R)	0119139	Metal oxide	4.7Ω	±10%	RD2PA
R716(L,R)	0119041	Metal oxide	10Ω	±10%	RD1PA
R717(L,R)	0119526	Metal	270Ω	±10%	RN2B
R718 L	0114139	Carbon film	220Ω	±5%	SRD¼P
R718 R	0114141	Carbon film	270Ω	±5%	SRD¼P
R719(L,R)	0114061	Carbon film	68Ω	±5%	SRD¼P
R720(L,R)	0134383	Composition	6.8kΩ	±10%	RC½GF
R721(L,R)	0114281	Carbon film	100kΩ	±5%	SRD¼P
R722(L,R)	0138213	Composition	330kΩ	±5%	RC½GF
R724(L,R)	0114203	Carbon film	12kΩ	±5%	SRD¼P
R725(L,R)	0134367	Composition	330Ω	±10%	RC½GF
R801	0134379	Composition	3.3kΩ	±10%	RC½GF
R802	0134379	Composition	3.3kΩ	±10%	RC½GF
R803	0134373	Composition	1kΩ	±10%	RC½GF
R804	0134373	Composition	1kΩ	±10%	RC½GF
R805	0119421	Metal	100Ω	±10%	RN1B
R806	0119401	Metal	100Ω	±10%	RN1B
R807	0134378	Composition	2.7kΩ	±10%	RC½GF
R808	0134373	Composition	1kΩ	±10%	RC½GF
R809	0119424	Metal	180Ω	±10%	RN1B
R810	0119424	Metal	180Ω	±10%	RN1B
for CHASSIS ASSEMBLY					
R001	0139005	Composition (without U.K.)	2.7MΩ	±10%	RC½GF
R002	0114049	Carbon film	22Ω	±5%	SRD¼P
R003	0134409	Composition	1MΩ	±10%	RC½GF

www.hifiengine.com

IC'S, FET'S & TRANSISTORS

for TUNER PRINTED WIRING BOARD

SYMBOL NO.	STOCK NO.	DESCRIPTION
IC151	2367201	HA1138
IC201	2367191	HA1211
IC202	2367122	HA1137
IC301	2367173	HA1156WZ
FET101	2327432	3SK45 Ⓑ
Q101	0573510	2SC535 Ⓑ
Q102	0573507	2SC461 Ⓑ
Q301	2327443	2SC1344 Ⓔ
Q302	2327443	2SC1344 Ⓔ
Q303	2327444	2SC1344 Ⓕ
Q304	2327444	2SC1344 Ⓕ
Q305	2327443	2SC1344 Ⓔ

for EQUALIZER PRINTED WIRING BOARD

SYMBOL NO.	STOCK NO.	DESCRIPTION
IC401	2367152	HA1452W
Q401(L,R)	2327443	2SC1344 Ⓔ
Q901	2327443	2SC1344 Ⓔ
Q902	2327443	2SC1344 Ⓔ
Q903	2327443	2SC1344 Ⓔ

for PRE-TONE PRINTED WIRING BOARD

SYMBOL NO.	STOCK NO.	DESCRIPTION
Q601(L,R)	2327443	2SC1344 Ⓔ
Q602(L,R)	2327443	2SC1344 Ⓔ
Q603(L,R)	2327453	2SA673 Ⓒ

for MAIN PRINTED WIRING BOARD

SYMBOL NO.	STOCK NO.	DESCRIPTION
IC701	2367152	HA1452W
Q501	2320063	2SC458 Ⓒ
Q502	2320063	2SC458 Ⓒ
Q503	2320063	2SC458 Ⓒ
Q504	2327333	2SC1213 Ⓒ
Q505	2320063	2SC458 Ⓒ
Q701(L,R)	2327802	2SD478 Ⓒ
Q702(L,R)	2327792	2SB568 Ⓒ
Q703(L,R)	2327623	2SA753 Ⓒ
Q704(L,R)	2327613	2SC1343 Ⓒ
Q801	2327802	2SD478 Ⓒ
Q802	2327792	2SB568 Ⓒ
Q803	2327802	2SD478 Ⓒ

DIODES, THYRISTORS & THERMISTORS

for TUNER PRINTED WIRING BOARD

SYMBOL NO.	STOCK NO.	DESCRIPTION
CR151	2337011	1S2076
CR152	0575002	1N34A
CR153	2337011	1S2076
CR154	2337011	1S2076
CR155	2337011	1S2076
CR156	2337011	1S2076
CR201	2337011	1S2076
CR202	2337011	1S2076
CR301	2337011	1S2076
CR302	2337011	1S2076

for MAIN PRINTED WIRING BOARD

SYMBOL NO.	STOCK NO.	DESCRIPTION
CR501	2337011	1S2076
CR502	2337011	1S2076
CR503	2337011	1S2076
CR504	2337011	1S2076
CR505	2337011	1S2076
CR701(L,R)	2347064	SD-5L
CR702(L,R)	2347044	MV-5L
CR703(L,R)	2337011	1S2076
CR704(L,R)	2337011	1S2076
CR705(L,R)	2337011	1S2076
CR706(L,R)	2337011	1S2076
CR707(L,R)	2337011	1S2076
CR708(L,R)	2337011	1S2076
CR801	2337251	ERD 03-02
CR802	2337251	ERD 03-02
CR803	2337251	ERD 03-02
CR804	2337251	ERD 03-02
CR805	2337181	HZ-15
CR806	2337181	HZ-15
CR807	2337182	HZ-16
CR808	2337081	W06A
CR809	2337081	W06A
CR810	2337182	HZ-16
CR811	2337011	1S2076
SCR501	2337091	CW01B
TH701(L,R)	0576031	13D27

for CHASSIS ASSEMBLY

SYMBOL NO.	STOCK NO.	DESCRIPTION
CR001	2337011	1S2076

VARIABLE RESISTORS

for TUNER PRINTED WIRING BOARD

SYMBOL NO.	STOCK NO.	DESCRIPTION
VR201	0151226	100kΩ-(B)
VR202	0151254	100kΩ-(B)
VR301	0151284	300kΩ-(B)
VR302	0151224	10kΩ-(B)
VR303	0151226	100kΩ-(B)

for PRE-TONE PRINTED WIRING BOARD

SYMBOL NO.	STOCK NO.	DESCRIPTION	
VR601(L,R)	0156153	50kΩ-(B)	BASS
VR602(L,R)	0156153	50kΩ-(B)	TREBLE
VR603(L,R)	0153714	200kΩ-(B)	VOLUME
VR604	0156161	200kΩ-(W)	BALANCE

for MAIN PRINTED WIRING BOARD

SYMBOL NO.	STOCK NO.	DESCRIPTION
VR701(L,R)	0151222	100Ω-B

COILS & TRANSFORMERS

for TUNER PRINTED WIRING BOARD

SYMBOL NO.	STOCK NO.	DESCRIPTION
L101	2134651	FM antenna coil
L102	2134657	FM RF1 coil
L103	2134658	FM RF2 coil
L104	2227201	Choke coil (2.2μH)
L105	2134471	FM OSC coil
L201	2227119	Choke coil (18μH)
L202	2227081	Choke coil (1μH)
T101	2154293	FM IF transformer
T201	2154271	FM IF transformer

www.hifiengine.com

SYMBOL NO.	STOCK NO.	DESCRIPTION
T252	2134445	AM OSC coil
T253	2154181	AM IF transformer
	for MAIN PRINTED WIRING BOARD	
L701(L,R)	2227142	Audio trap coil (2.2μH)
	for CHASSIS ASSEMBLY	
L002	2227032	Choke coil (2.2μH)
	MISCELLANEOUS	
	2505285	Tuner printed wiring board assembly (for U.S.A. & Canada)
	2505286	Tuner printed wiring board assembly (for Europe & England)
	2505521	Equalizer printed wiring board assembly
	2505531	Pre-tone printed wiring board assembly
	2505541	Switch printed wiring board assembly
	2505551	Main printed wiring board assembly
	2505561	Lamp printed wiring board assembly
VC101-104 VC151-152	0281181	Variable capacitor
TC104	0283123	Trimmer capacitor
MF201	2134541	Ceramic filter
MF202	2134541	Ceramic filter
MF203	2134541	Ceramic filter
CP001	0269017	CR multiple component (for U.S.A.)
CP001	0269015	CR multiple component (for Europe & England)
CP401	2134492	Leak filter
RY901	2647061	Read relay
F001	2727224	Fuse-fuse (4A) (for U.S.A. & Canada)
F001	2727221	Fuse-fuse (2A) (for Europe & England)
F002	2727085	Fuse-wired in fuse (3A)
F003	2727391	Fuse-wired in fuse (5A) (only for U.S.A. & Canada)
PL6	2767201	Lamp-pilot lamp (6.3V, 250mA)
PL7	2767201	Lamp-pilot lamp (6.3V, 250mA)
PL9	2767231	Lamp-indicator lamp (8V, 30mA)
PL10	2337237	Light emitting diode
S1a-c	2617601	Switch-rotary switch (for Function sw.)
S2a-f	2617591	Switch-rotary switch (for Tape selector sw.)
S3a,b,4a,b,5	2637721	Switch-push switch (for Mode, Loudness, FM mute sw.)
S6a,b,7a,b	2637731	Switch-push switch (for Low Filter, High Filter sw.)
S8a,b,9a,b	2637741	Switch-push switch (for Speaker Selector sw.)
S10	2637322	Switch-power switch
S11	2647072	Speaker relay
S12	2787331	Switch-thermal switch
T001	2218151	Power transformer
	2120871	Balun transformer
L001	2134721	Ferrite antenna
	2577181	Signal meter
	2577184	Tuning meter
	2687451	Terminal-6P terminal
	2687491	Terminal-4P terminal
	2687361	Terminal-2P terminal
	2687421	Terminal-4P screw terminal (for FM antenna)
	2687701	Terminal-4P push terminal (for Speaker)
	2677201	Jack-headphone jack
	2687591	Jack-1P US pin jack
	2657291	Socket-DIN socket
	2657211	Socket-AC socket (only for U.S.A. & Canada)
	2720022	Holder-lamp holder
	2727241	Holder-fuse holder

SYMBOL NO.	STOCK NO.	DESCRIPTION
	4350791	Holder-antenna holder
	2748442	AC power cord (for U.S.A. & Canada)
	2747732	AC power cord (for England)
	2748511	AC power cord (for Europe)
	4567451	Screw-3 φ x 6 CT bind screw
	4567411	Screw-3 φ x 6 CT bind screw
	4567431	Screw-3 φ x 6 CT bind screw
	4567433	Screw-3 φ x 10 CT bind screw
	4567449	Screw-4 φ x 30 CT bind screw
	4790092	Screw (for earth)
	4387911	Nut (for power transformer fixing)
	4683162	Indicator rubber
	3913001	Bushing (for Europe) (for AC power cord)
	3913005	Bushing (for England) (for AC power cord)
	0043793	Bushing (for U.S.A. & Canada) (for AC power cord)
	3913006	Bushing (for ferrite antenna)
	4387281	AC bush plate (for U.S.A. & Canada)
	4387283	AC bush plate (for Europe & England)
	4390421	AC socket cover (only for Europe & England)
	for DIAL MECHANISM ASSEMBLY	
	3199461	Dial scale
	3386712	Dial pointer
	0666704	Dial cord holding fixture
	3338841	Spring
	4567411	3 φ x 6 CT bind screw
	4570552	Tuning shaft assembly
	3920802	Pulley
	for FINAL ASSEMBLY	
	3243891	Escutcheon (with knob stock no.3282802)
	3282802	Knob-Mode, Loudness, FM Mute knob others
	3282395	Knob-Power knob
	3283251	Knob-Tuning knob
	3283031	Knob-Bass, Treble, Balance & Tape selector knob
	3283041	Knob-Volume, Function knob
	3916411	Leg
	4567413	3 φ x 10 CT bind screw
	4567411	3 φ x 6 CT bind screw
	4567446	4 φ x 16 CT bind screw
	for CABINET ASSEMBLY	
	9403042	Cabinet assembly
	for ACCESSORY	
	2748371	FM antenna

www.hifiengine.com

9. FRONT AND REAR PANEL, VORDERE UND HINTERE BEDIENUNG-STAFEL, PANNEAUX AVANT ET ARRIERE

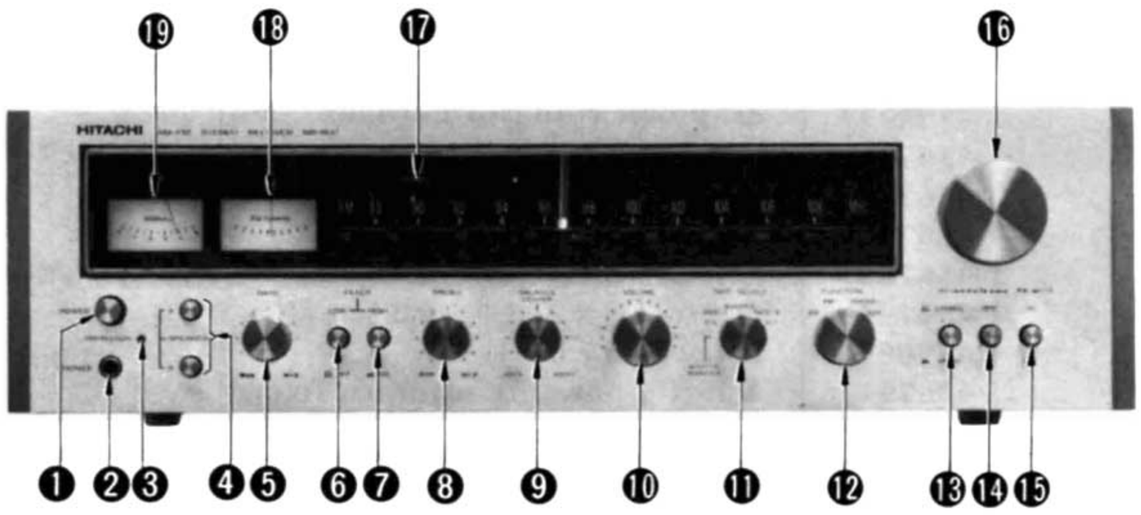

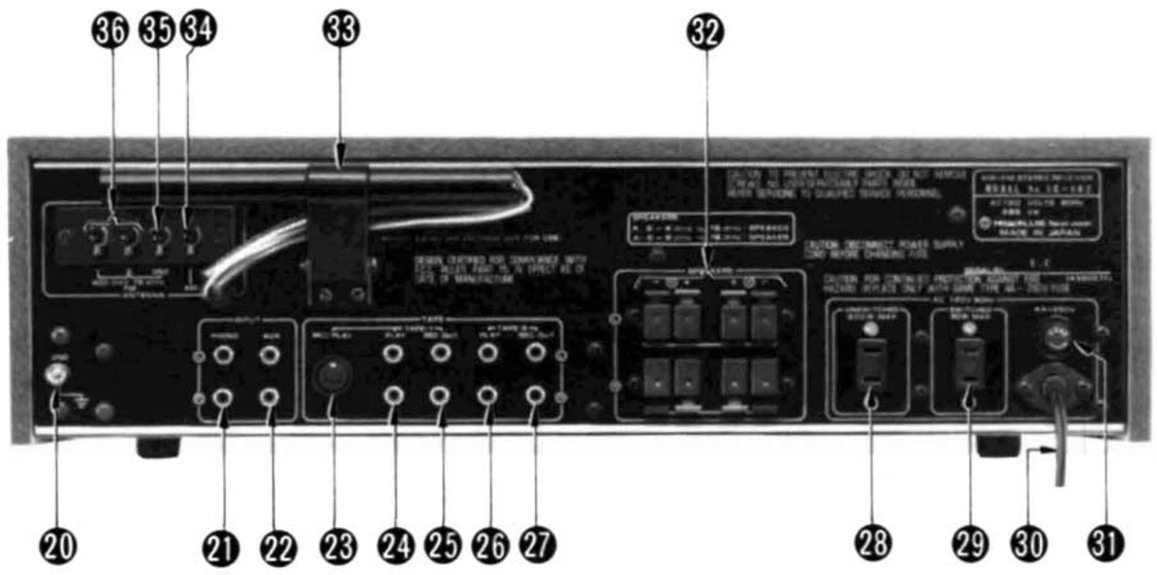

- ❶ POWER SWITCH
- ❷ PHONES JACK
- ❸ PROTECTION INDICATOR LAMP
- ❹ SPEAKER SWITCH
- ❺ BASS CONTROL
- ❻ LOW FILTER SWITCH
- ❼ HIGH FILTER SWITCH
- ❽ TREBLE CONTROL
- ❾ BALANCE CONTROL
- ❿ VOLUME CONTROL
- ⓫ TAPE SELECTOR SWITCH
- ⓬ FUNCTION SWITCH
- ⓭ MODE SWITCH
- ⓮ LOUDNESS SWITCH
- ⓯ FM MUTE SWITCH
- ⓰ TUNING KNOB
- ⓱ FM STEREO INDICATOR
- ⓲ TUNING METER
- ⓳ SIGNAL METER

- ❶ NETZSCHALTER
- ❷ KOPFHÖRER-BUCHSE
- ❸ SCHUTZSCHALTUNG-ANZEIGELEUCHTE
- ❹ LAUTSPRECHERSCHALTER
- ❺ BASS-REGLER
- ❻ TIEFENFILTER
- ❼ HÖHENFILTER
- ❽ HÖHENREGLER
- ❾ BALANCE-REGLER
- ❿ LAUTSTÄRKEREGLER
- ⓫ TONBANDWAHLSCHALTER
- ⓬ FUNKTIONSSCHALTER
- ⓭ STEREO/MONOSCHALTER
- ⓮ SCHALTER FÜR GEHÖRRICHTIGE LAUTSTÄRKEKONTUR
- ⓯ UKW-STILLABSTIMMSCHALTER
- ⓰ ABSTIMMUNG
- ⓱ UKW-STEREO-ANZEIGE
- ⓲ ABSTIMMANZEIGE
- ⓳ FELDSTÄRKE-MESSINSTRUMENT

- ❶ INTERRUPTEUR SECTEUR
- ❷ ECOUTEURS STÉRÉOPHONIQUES
- ❸ LAMPE INDICATRICE DE PROTECTION
- ❹ INTERRUPTEUR DE HAUT-PARLEURS
- ❺ COMMANDE DE GRAVE
- ❻ COMMUTATEUR DU FILTER PASSE-BAS
- ❼ COMMUTATEUR DU FILTER PASSE-HAUT
- ❽ COMMANDE DES AIGUS
- ❾ BALANCE
- ❿ VOLUME
- ⓫ COMMUTATEUR SÉLECTEUR DE BANDE
- ⓬ FONCTIONS
- ⓭ COMMANDE DE MODE
- ⓮ CORRECTEUR PHYSIOLOGIQUE
- ⓯ COMMUTATEUR FM MUTE
- ⓰ BOUTON D'ACCORD
- ⓱ INDICATEUR STÉRÉO
- ⓲ MÈTREUR DE SYNTONISATION
- ⓳ INDICATEUR D'ACCORD

- ⓴ GROUND TERMINAL
- ㉑ PHONO INPUT TERMINALS
- ㉒ AUX INPUT TERMINALS
- ㉓ DIN REC/PLAY SOCKET
- ㉔ TAPE-1 PLAYBACK TERMINALS
- ㉕ TAPE-1 REC OUT TERMINALS
- ㉖ TAPE-2 PLAYBACK TERMINALS
- ㉗ TAPE-2 REC OUT TERMINALS
- ㉘ AC OUTLET (UNSWITCHED) (for U.S.A. & Canada set only)
- ㉙ AC OUTLET (SWITCHED) (for U.S.A. & Canada set only)
- ㉚ AC POWER CORD
- ㉛ FUSE
- ㉜ SPEAKER TERMINALS
- ㉝ AM BAR ANTENNA
- ㉞ AM ANTENNA TERMINAL
- ㉟ EARTH TERMINAL FOR FM 75 ohms ANTENNA
- ㊱ FM ANTENNA TERMINALS

- ⓴ ERDUNG
- ㉑ PLATTENSPIELER-EINGANGSKLEMMEN
- ㉒ EINGANGSKLEMMEN F. EXT. SCHALLQUELLEN
- ㉓ NORMBUCHSE F. AUFN./WIEDERG. (DIN)
- ㉔ EINGANG FÜR TONBANDGERÄT-1
- ㉕ AUSGANG FÜR TONBANDGERÄT-1
- ㉖ EINGANG FÜR TONBANDGERÄT-2
- ㉗ AUSGANG FÜR TONBANDGERÄT-2
- ㉘ WECHSELSTROMAUSGANG (Ungeschaltet) (nur 120V)
- ㉙ NETZKABEL (Geschaltet) (nur 120V)
- ㉚ NETZKABEL
- ㉛ SICHERUNG
- ㉜ LAUTSPRECHER-KLEMMEN
- ㉝ MW-FERRITSTABANTENNE
- ㉞ MW-ANTENNENBUCHSE
- ㉟ ERDUNGSKLEMME FÜR 75-Ohm UKW-ANTENNE
- ㊱ UKW-ANTENNENBUCHSE

- ⓴ PRISE DE TERRE
- ㉑ BORNE D'ENTRÉE PHONO
- ㉒ BORNE D'ENTRÉE AUXILIAIRES
- ㉓ CONNECTEUR D'ENREGISTREMENT/REPRODUCTION DIN
- ㉔ BORNE PLAYBACK TAPE-1
- ㉕ BORNE REC OUT TAPE-1
- ㉖ BORNE PLAYBACK TAPE-2
- ㉗ BORNE REC OUT TAPE-2
- ㉘ SORTIE C.A. (indépendante) (uniquement 120V)
- ㉙ SORTIE C.A. (couplée) (uniquement 120V)
- ㉚ CORDON D'ALIMENTATION C.A.
- ㉛ FUSIBLE
- ㉜ BORNES DE HAUT-PARLEUR
- ㉝ ANTENNE DE FERRITE AM
- ㉞ BORNE D'ANTENNE OM/OC
- ㉟ PRISE DE TERRE POUR L'ANTENNE FM DE 75 ohms
- ㊱ BORNE D'ANTENNE FM OUC

HITACHI

Head Office : 5-1, 1-chome, Marunouchi, Chiyoda-ku, Tokyo
Tel. : Tokyo (212) 1111 (80 lines)
Cable Address : "HITACHY" TOKYO

Geschäftssitz : 5-1, 1-chome, Marunouchi, Chiyoda-ku, Tokio
Telefon : Tokio (212) 1111 (80 Amtsleitungen)
Telegramme : "HITACHY" TOKYO

Siege Social : 5-1, 1-chome, Marunouchi, Chiyoda-ku, Tokyo
Tel. : Tokyo (212) 1111 (80 lignes)
Adress Par Cable : "HITACHY" TOKYO, JAPON

Printed in Japan (S)
Gedruckt in Japan (S)
Imprimé au Japon (S)

www.hifiengine.com