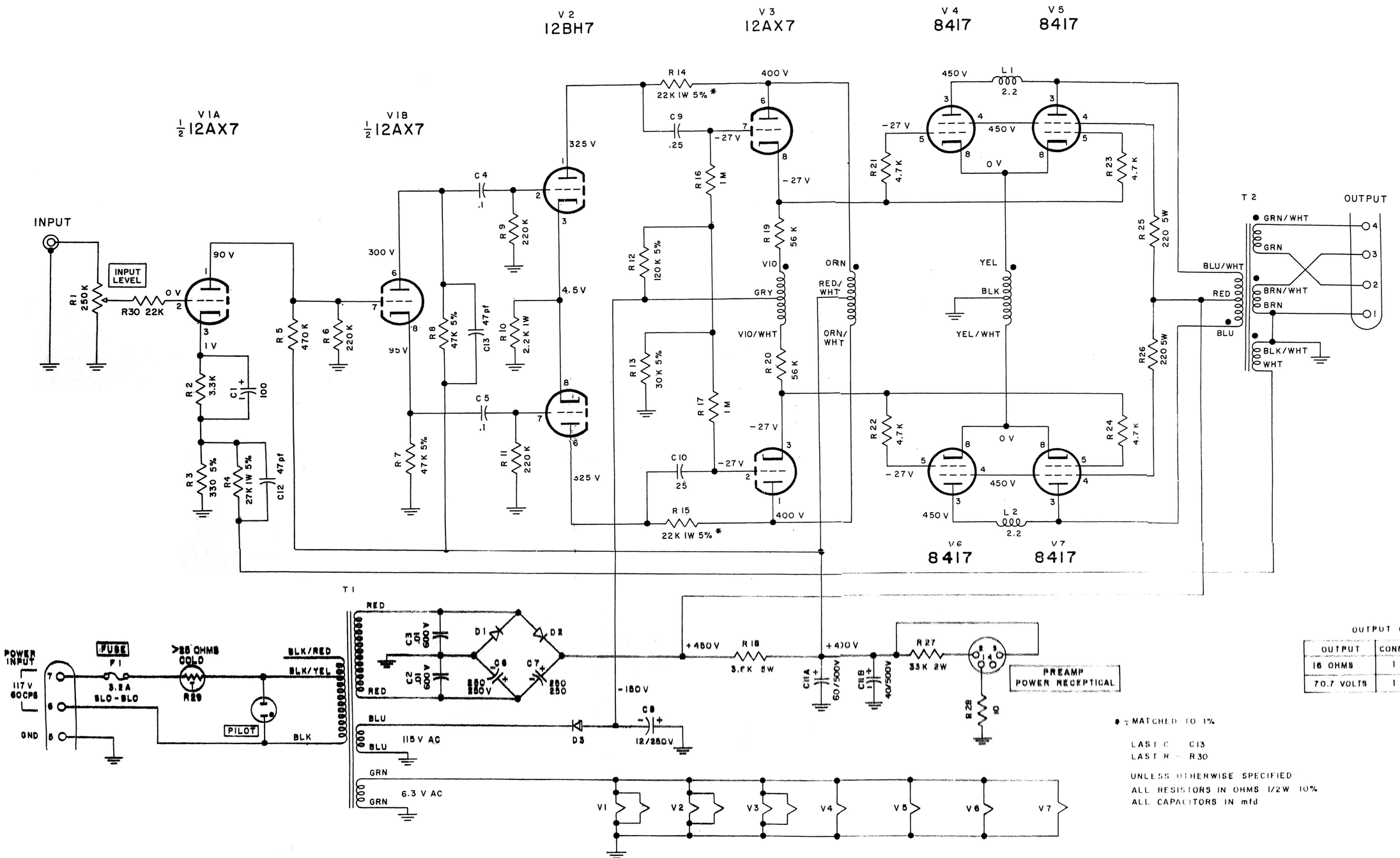

OUTPUT CONNECTIONS

OUTPUT	CONNECT TO	JUMPER
16 OHMS	1 AND 4	1 TO 2 3 TO 4
70.7 VOLTS	1 AND 4	2 TO 3

* = MATCHED TO 1%

LAST C — C13
LAST R — R30

UNLESS OTHERWISE SPECIFIED
ALL RESISTORS IN OHMS 1/2W 10%
ALL CAPACITORS IN mfd

MATERIAL	TITLE SCHEMATIC 100 WATT POWER AMPLIFIER	PART NO.
FINISH	THE I. T. VERDIN CO. 2021 Eastern Avenue CINCINNATI, OHIO 45202	
TOLERANCES – Unless otherwise specified ± ½° Angles ± Fractions ± .003 Decimals		

www.hifiengine.com