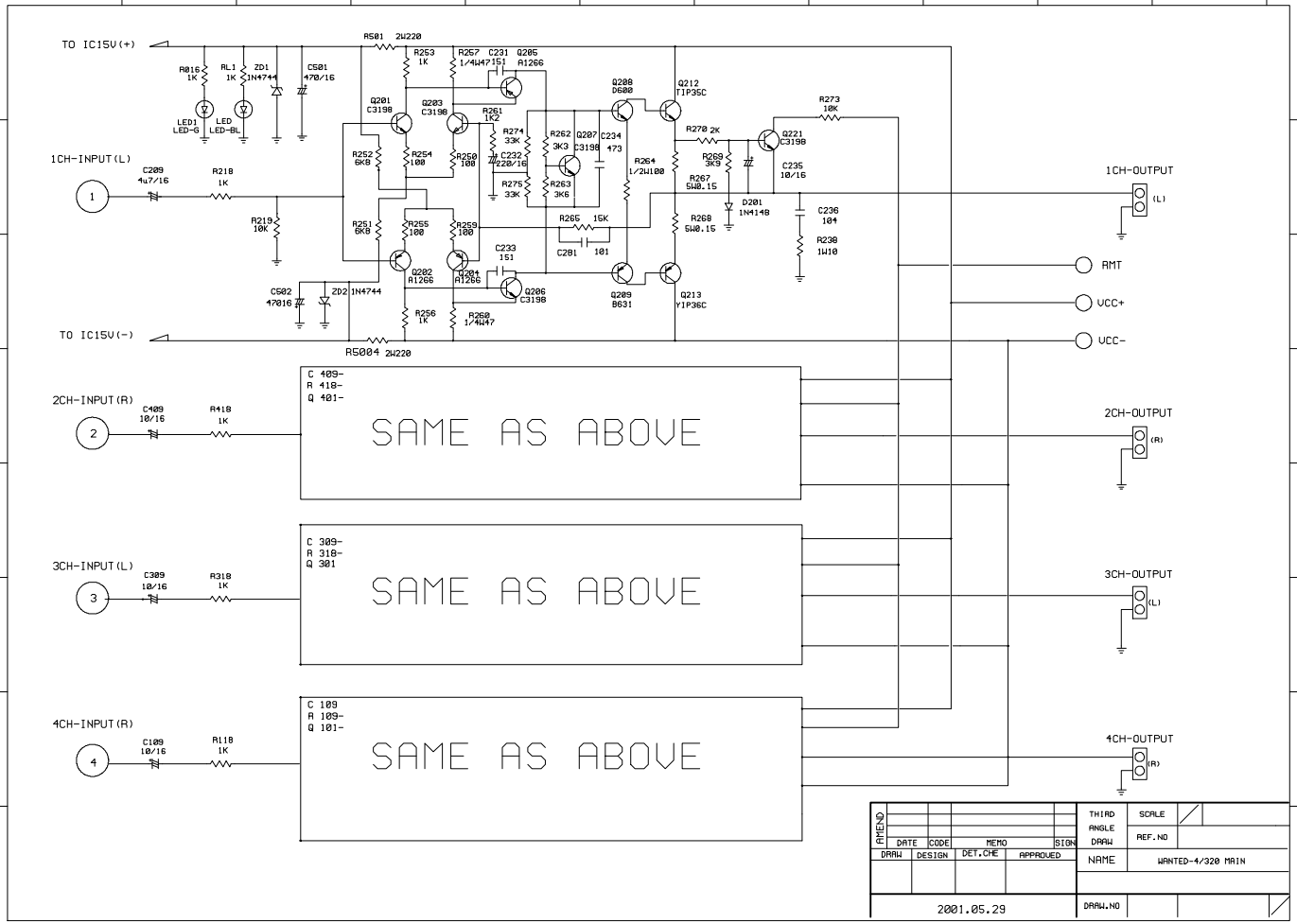
TO IC15V(+)
TO IC15V(-)
R501 2W220
R5004 2W220
R016 1K
RL1 1K
ZD1 1N4744
C501 470/16
LED1 LED-G
LED LED-BL
R253 1K
R257 1/4W47
C231 151
Q205 A1266
Q201 C3198
Q203 C3198
R261 1K2
R274 33K
R252 5K6
R254 100
R260 100
C232 220/16
R275 33K
R262 3K3
Q207 C3198
C234 473
R263 3K6
Q208 D600
Q212 TIP35C
R264 1/2W100
R270 2K
R269 3K3
R267 5W0.15
Q221 C3198
C235 10/16
R273 10K
D201 1N4148
C236 104
R238 1W10
R265 15K
C281 101
R268 5W0.15
Q209 B631
Q213 Y1P36C
1CH-INPUT(L)
C209 4u7/16
R218 1K
R219 10K
R251 5K6
R255 100
R259 100
C233 151
Q202 A1266
Q204 A1266
Q206 C3198
C502 47016
ZD2 1N4744
R256 1K
R258 1/4W47
1CH-OUTPUT
(L)
RMT
VCC+
VCC-
C 409-
R 418-
Q 401-
SAME AS ABOVE
2CH-INPUT(R)
C409 10/16
R418 1K
2CH-OUTPUT
(R)
C 309-
R 318-
Q 301
SAME AS ABOVE
3CH-INPUT(L)
C309 10/16
R318 1K
3CH-OUTPUT
(L)
C 109
R 109-
Q 101-
SAME AS ABOVE
4CH-INPUT(R)
C109 10/16
R118 1K
4CH-OUTPUT
(R)
AMEND
DATE
CODE
MEMO
SIGN
DRAW
DESIGN
DET.CHE
APPROVED
THIRD ANGLE DRAW
SCALE
REF.NO
NAME
WANTED-4/320 MAIN
2001.05.29
DRAW.NO