Ned. Ver. v. Historie v/d Radio

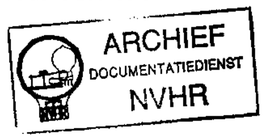
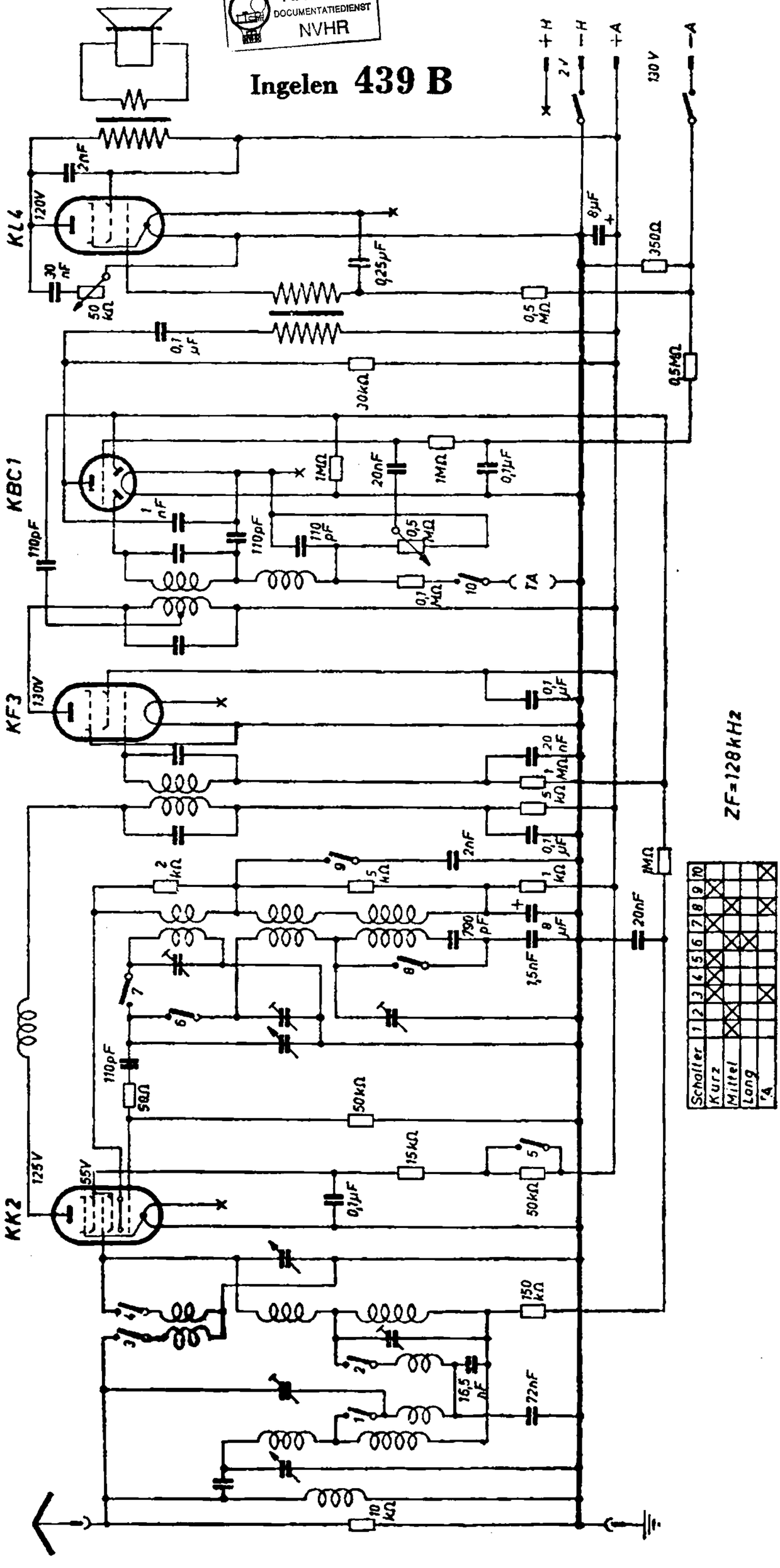
Ingelen 439 B