Schematic Diagram

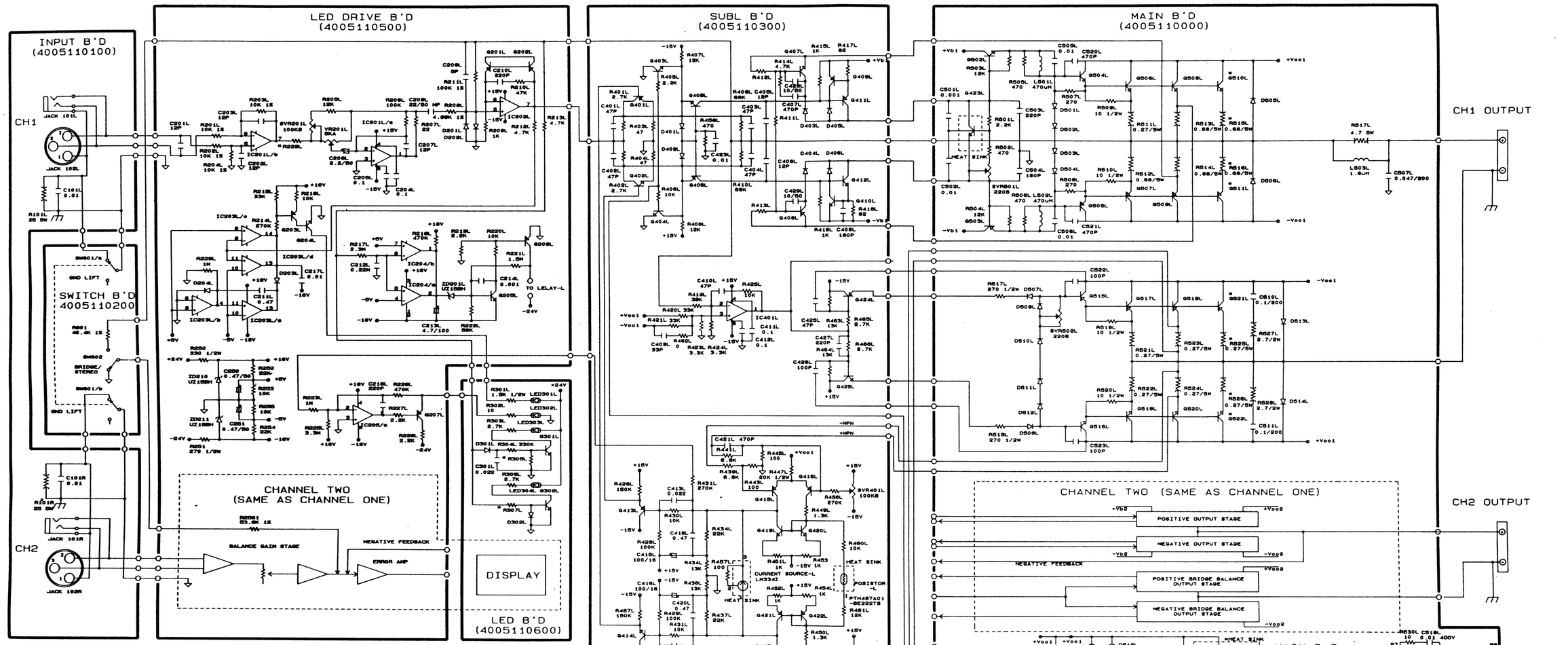

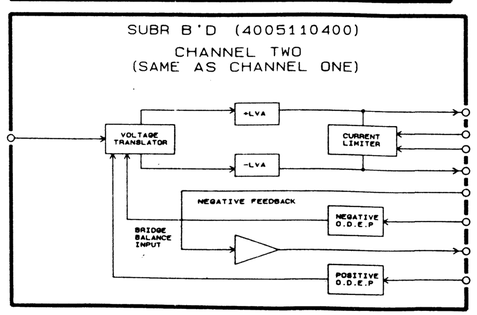

SERVICE INFORMATION

1. RESISTANCE VALUES ARE INDICATED IN OHMS UNLESS OTHERWISE SPECIFIED. (K=1,000, M=1,000,000)
2. CAPACITANCE VALUES ARE SHOWN IN MICROFARADS UNLESS OTHERWISE NOTED. (P=MICRO-MICROFARADS)
3. ALL VOLTAGES ARE REFERED TO GROUND UNDER THE FOLLOWING CONDITIONS.
   DC : NO SIGNAL EXCEPT WHERE INDICATED.
   AC : RMS
4. —PRECAUTION—

A) ALL COMPONENTS ⚠ MARKED MUST BE REPLACED ONLY WITH ORIGINAL TYPE SPECIFIED BY THE MANUFACTURER, INKEL PA COPORATION AND INSTALLED AS THE ORIGINAL SPACERS AND POSITIONED AWAY FROM ADJACENT COMPONENTS WHERE APPLICABLE.

B) ALL SOLDERING MUST BE DONE IN A PROFESSIONAL MANNER USING SOLDER WHITE RESINE CORE ONLY.

C) ALL COVERS, SHIELD AND INSULATING SPACERS MUST BE REPLACED BEFORE RETURNING APPLIANCE TO CUSTOMER.

D) A DAMAGE POWER SUPPLY CORD MUST BE REPLACED BEFORE RETURNING TO CUSTOMER.

E) DIELECTRIC TEST CONSISTING OF 120V AC 60Hz IS TO BE APPLIED BETWEEN BOTH BALDES OF THE POWER SUPPLY CORD ATTACHMENT PLUG THE EXPOSE CONDUCTIVE SURFACE OF THE APPLIANCE FOR A PERIOD OF NOT LESS THAN ONE SECOND BEFORE RETURNING APPLIANCE TO CUSTOMER.

F) THE ⊸⊷ MARKED RESISTORS ARE MOUNTED THE P.C.B ON SLEEVES.

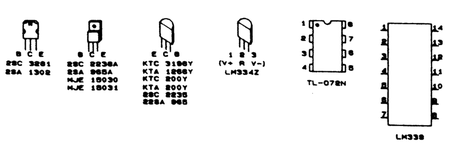

	PSA900	PSA1200
R305	1.8K	1.8K
R306	20K	10K
R307	3.9K	10K
R313	3.9K	3.9K
CIRCUIT BREAKER	12A	15A

*PSA900: NOT USE Q510, 511, 521, 522
R515, 516, 525, 526

IC TL-078N : IC201, 202, 205, 401
IC LM338 : IC203, 204
TR KTC3198Y : Q204, 205, 301, 302, 402, 403, 404, 407, 410, 414, 417-420, 550
TR KTA1266Y : Q201-203, 206, 207, 401, 408, 409, 413, 415, 416, 421, 422, 551
TR KTC200Y : Q423, 425
TR KTA200Y : Q424
TR 2SC 2235 : Q405, 412
TR 2SA 965 : Q406, 411
TR 2SC 2238A : Q502
TR 2SA 965A : Q503
TR MJE 15030 : Q504, 516
TR MJE 15031 : Q505, 515
TR 2SC 3281 : Q506, 508, 510, 518, 520, 522
TR 2SA 1302 : Q507, 509, 511, 517, 519, 521
DIODE 1N5402 : D505, 506, 513, 514
DIODE 1N4006 : D301, 501-504, 509-512, 515-521, 550-556, 558, 559
DIODE 1N4148 : D201-204, 302, 401-406, 507, 508, 557
LED EL204RD : LED301, POWER
LED EL204GD : LED301, 302
LED EL204AD : LED303