Ned. Ver. v. Historie v/d Radio

ARCHIEF
DOCUMENTATIEDIENST
NVHR
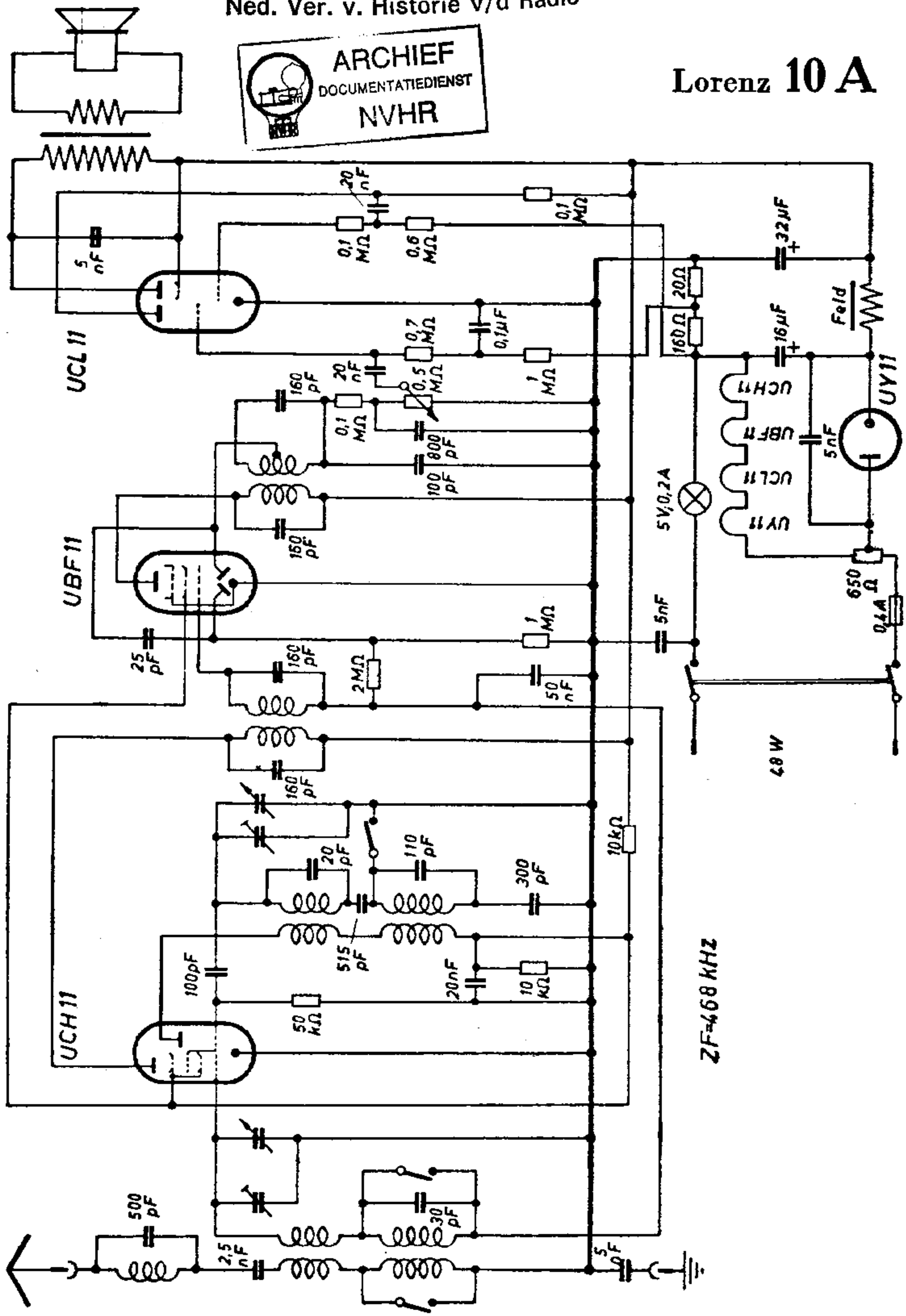
Lorenz 10 A