JVC

SERVICE MANUAL

COMPACT COMPONENT SYSTEM

MX-J500

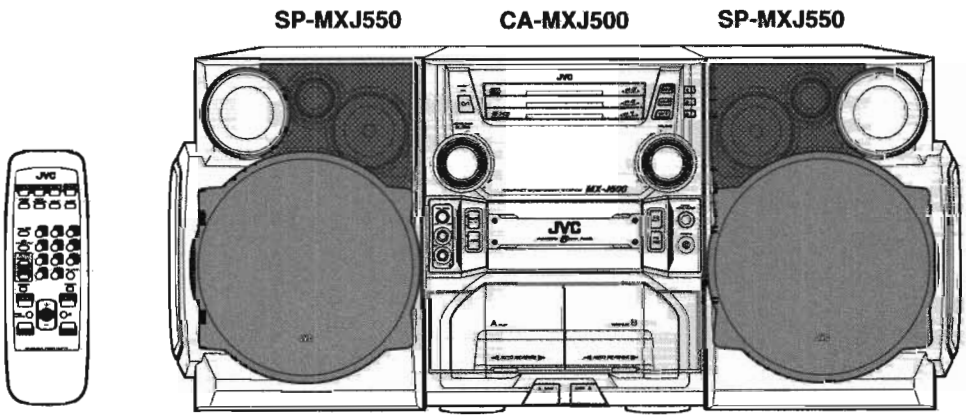

COMPACT disc DIGITAL AUDIO

Area Suffix	
A	Australia
US	Singapore
UX	Saudi Arabia
UP	Korea

Contents

Safety precautions ---------- 1-2
Important for laser products ---------- 1-3
Preventing static electricity ---------- 1-4
Precautions at disassembling and parts replacement -------- 1-5
Instructions ---------- 1-6~13
Disassembly method ---------- 2-1
Adjustment method ---------- 2-23
Diagnosis which uses extension wire method -------- 2-27
Flow of functional operation until TOC read ---------- 2-28
Maintenance of laser pickup ---------- 2-29
Replacement of laser pickup ---------- 2-29
Description of major ICs ---------- 2-30
Block diagrams ---------- 2-45
Standard schematic diagrams ---------- 2-47
Printed circuit boards ---------- 2-56~60
Parts list ---------- 3-1~27

This service manual is made from 100% recycled paper.
COPYRIGHT © 2000 VICTOR COMPANY OF JAPAN, LTD.

No.20833
Apr. 2000

Safety Precautions

1. This design of this product contains special hardware and many circuits and components specially for safety purposes. For continued protection, no changes should be made to the original design unless authorized in writing by the manufacturer. Replacement parts must be identical to those used in the original circuits. Services should be performed by qualified personnel only.

2. Alterations of the design or circuitry of the product should not be made. Any design alterations of the product should not be made. Any design alterations or additions will void the manufacturer`s warranty and will further relieve the manufacture of responsibility for personal injury or property damage resulting therefrom.

3. Many electrical and mechanical parts in the products have special safety-related characteristics. These characteristics are often not evident from visual inspection nor can the protection afforded by them necessarily be obtained by using replacement components rated for higher voltage, wattage, etc. Replacement parts which have these special safety characteristics are identified in the Parts List of Service Manual. Electrical components having such features are identified by shading on the schematics and by (⚠) on the Parts List in the Service Manual. The use of a substitute replacement which does not have the same safety characteristics as the recommended replacement parts shown in the Parts List of Service Manual may create shock, fire, or other hazards.

4. The leads in the products are routed and dressed with ties, clamps, tubings, barriers and the like to be separated from live parts, high temperature parts, moving parts and/or sharp edges for the prevention of electric shock and fire hazard. When service is required, the original lead routing and dress should be observed, and it should be confirmed that they have been returned to normal, after re-assembling.

5. Leakage current check (Electrical shock hazard testing)
   After re-assembling the product, always perform an isolation check on the exposed metal parts of the product (antenna terminals, knobs, metal cabinet, screw heads, headphone jack, control shafts, etc.) to be sure the product is safe to operate without danger of electrical shock.
   Do not use a line isolation transformer during this check.
   - Plug the AC line cord directly into the AC outlet. Using a "Leakage Current Tester", measure the leakage current from each exposed metal parts of the cabinet, particularly any exposed metal part having a return path to the chassis, to a known good earth ground. Any leakage current must not exceed 0.5mA AC (r.m.s.)
   - Alternate check method
     Plug the AC line cord directly into the AC outlet. Use an AC voltmeter having 1,000 ohms per volt or more sensitivity in the following manner. Connect a 1,500Ω 10W resistor paralleled by a 0.15μF AC-type capacitor between an exposed metal part and a known good earth ground.
     Measure the AC voltage across the resistor with the AC voltmeter.
     Move the resistor connection to each exposed metal part, particularly any exposed metal part having a return path to the chassis, and measure the AC voltage across the resistor. Now, reverse the plug in the AC outlet and repeat each measurement. Voltage measured any must not exceed 0.75 V AC (r.m.s.). This corresponds to 0.5 mA AC (r.m.s.).

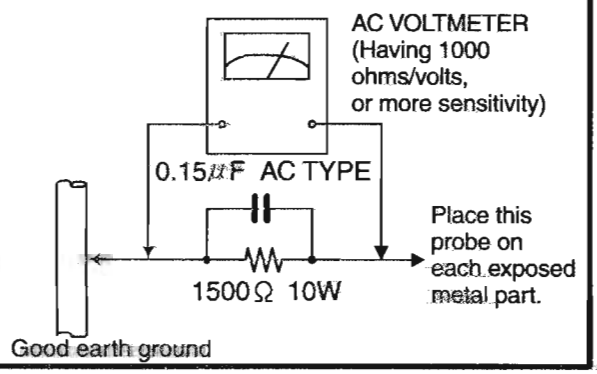

Warning

1. This equipment has been designed and manufactured to meet international safety standards.
2. It is the legal responsibility of the repairer to ensure that these safety standards are maintained.
3. Repairs must be made in accordance with the relevant safety standards.
4. It is essential that safety critical components are replaced by approved parts.
5. If mains voltage selector is provided, check setting for local voltage.

⚠ ***CAUTION*** **Burrs formed during molding may be left over on some parts of the chassis. Therefore, pay attention to such burrs in the case of preforming repair of this system.**

Important for laser products

1.CLASS 1 LASER PRODUCT

2.DANGER : Invisible laser radiation when open and inter lock failed or defeated. Avoid direct exposure to beam.

3.CAUTION : There are no serviceable parts inside the Laser Unit. Do not disassemble the Laser Unit. Replace the complete Laser Unit if it malfunctions.

4.CAUTION : The compact disc player uses invisible laser radiation and is equipped with safety switches which prevent emission of radiation when the drawer is open and the safety interlocks have failed or are de feated. It is dangerous to defeat the safety switches.

5.CAUTION : If safety switches malfunction, the laser is able to function.

6.CAUTION : Use of controls, adjustments or performance of procedures other than those specified herein may result in hazardous radiation exposure.

⚠ ***CAUTION*** **Please use enough caution not to see the beam directly or touch it in case of an adjustment or operation check.**

VARNING : Osynlig laserstrålning är denna del är öppnad och spårren är urkopplad. Betrakta ej strålen.

VARO : Avattaessa ja suojalukitus ohitettaessa olet alttiina näkymättömälle lasersäteilylle.Älä katso säteeseen.

ADVARSEL : Usynlig laserstråling ved åbning , når sikkerhedsafbrydere er ude af funktion. Undgå udsættelse for stråling.

ADVARSEL : Usynlig laserstråling ved åpning,når sikkerhetsbryteren er avslott. unngå utsettelse for stråling.

REPRODUCTION AND POSITION OF LABELS

WARNING LABEL

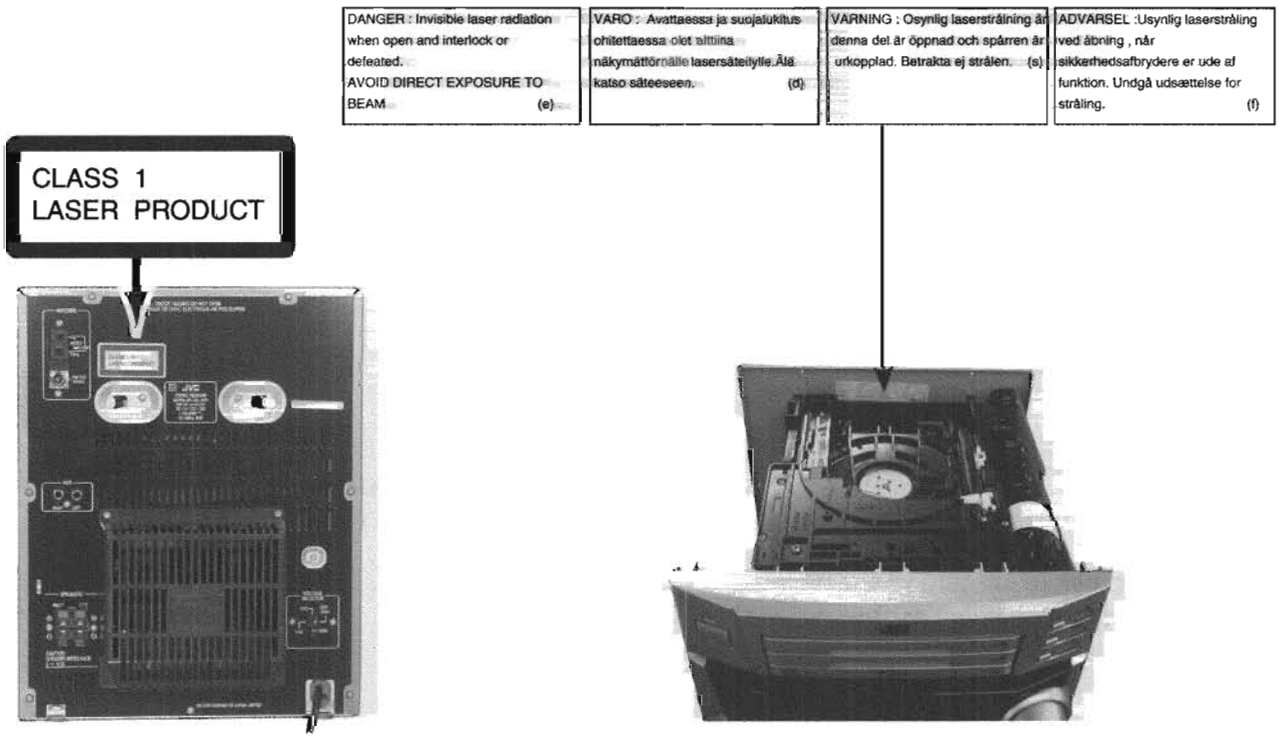

Preventing static electricity

1. Grounding to prevent damage by static electricity

Electrostatic discharge (ESD), which occurs when static electricity stored in the body, fabric, etc. is discharged, can destroy the laser diode in the traverse unit (optical pickup). Take care to prevent this when performing repairs.

2. About the earth processing for the destruction prevention by static electricity

In the equipment which uses optical pick-up (laser diode), optical pick-up is destroyed by the static electricity of the work environment.
Be careful to use proper grounding in the area where repairs are being performed.

2-1 Ground the workbench

Ground the workbench by laying conductive material (such as a conductive sheet) or an iron plate over it before placing the traverse unit (optical pickup) on it.

2-2 Ground yourself

Use an anti-static wrist strap to release any static electricity built up in your body.

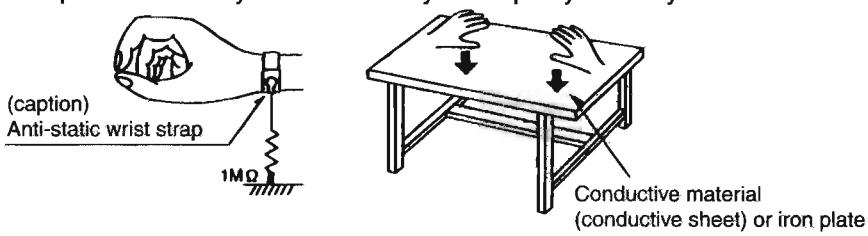

3. Handling the optical pickup

1. In order to maintain quality during transport and before installation, both sides of the laser diode on the replacement optical pickup are shorted. After replacement, return the shorted parts to their original condition. (Refer to the text.)

2. Do not use a tester to check the condition of the laser diode in the optical pickup. The tester's internal power source can easily destroy the laser diode.

4. Handling the traverse unit (optical pickup)

1. Do not subject the traverse unit (optical pickup) to strong shocks, as it is a sensitive, complex unit.

2. Cut off the shorted part of the flexible cable using nippers, etc. after replacing the optical pickup. For specific details, refer to the replacement procedure in the text. Remove the anti-static pin when replacing the traverse unit. Be careful not to take too long a time when attaching it to the connector.

3. Handle the flexible cable carefully as it may break when subjected to strong force.

4. It is not possible to adjust the semi-fixed resistor that adjusts the laser power. Do not turn it

Attention when traverse unit is decomposed

***Please refer to "Disassembly method" in the text for pick-up and how to detach the CD traverse mechanism.**

1. Remove the disk stopper and T. bracket on the CD changer mechanism assembly.
2. Disconnect the harness from connector on the CD motor board.
3. CD traverse unit is put up as shown in Fig.1.
4. Solder is put up before the card wire is removed from connector CN601 on the CD servo control board as shown in Fig. 2.
   (When the wire is removed without putting up solder, the CD pick-up assembly might destroy.)
5. Please remove solder after connecting the card wire with CN601 when you install picking up in the substrate.

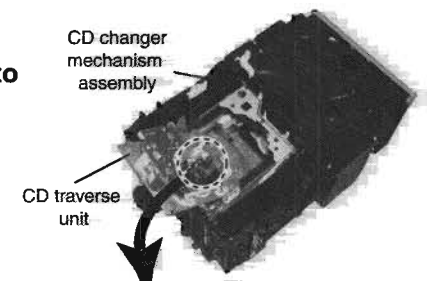

Fig.1

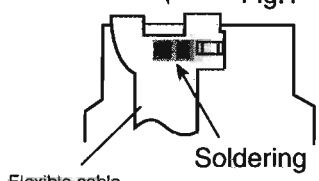

Fig.2

Precautions at disassembling and parts replacement

This model is charged with electricity on the power board even if the power cord is unplugged.
Therefore, always discharge electricity in accordance with the steps given below before starting disassembling of the unit and/or replacement of parts.

1. While referring to the disassembling steps, remove the metal cover and the CD changer mechanism.

2. Set electrical resistances of 1kohm, 1/4W to the places between the + and - terminals of the respective condensers C204 and C205 on the power board, and discharge electricity for 4 ~ 5 seconds.

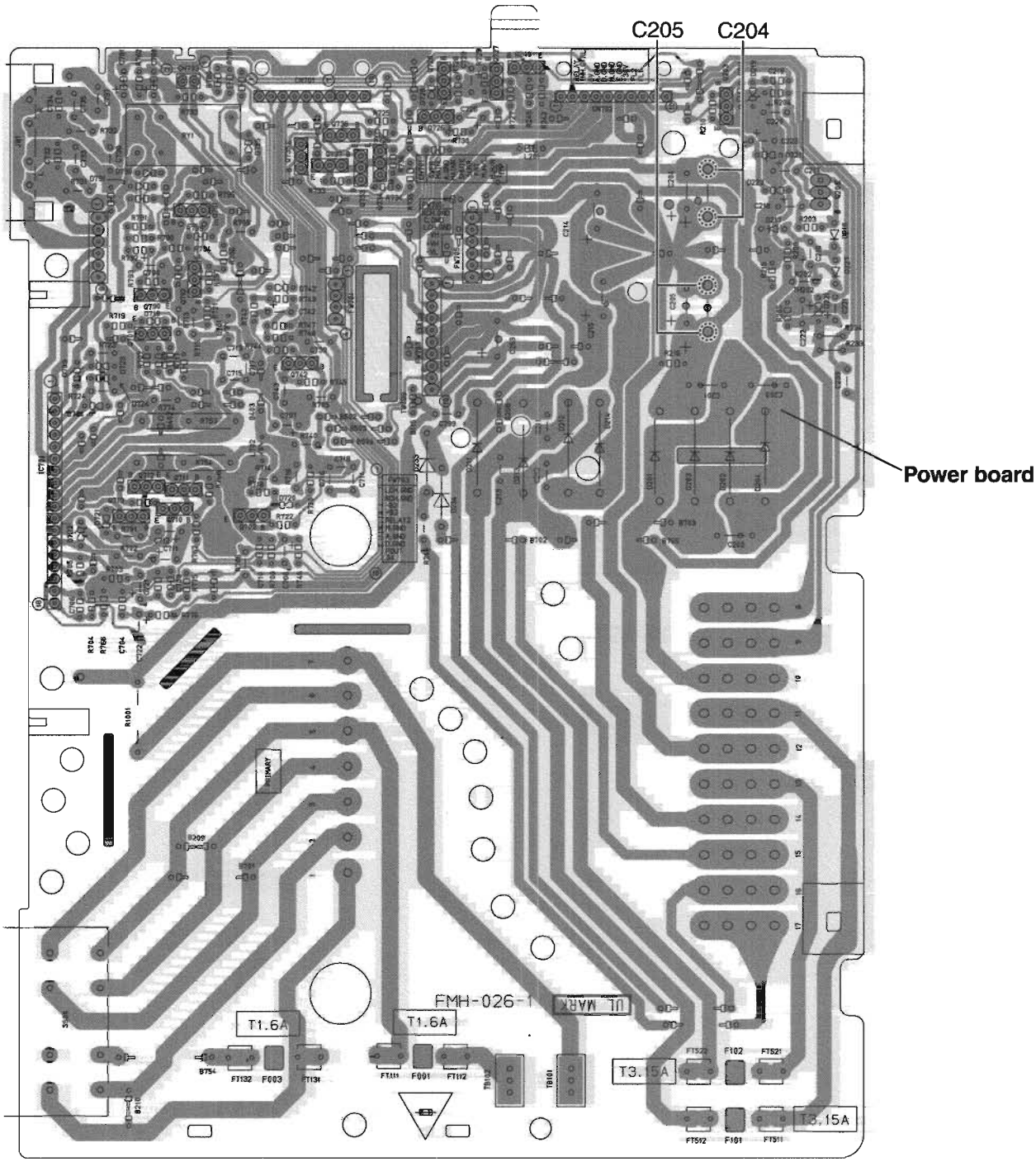

MX-J500

Instructions

Mains (AC) Line Instruction (not applicable for Europe, U.S.A., Canada, Australia, and U.K.)
Instrucción sobre la línea de la red (CA) (no aplicable para Europa, EE.UU., Canadá, Australia, ni el Grã-Bretanha)
Instrução sobre a tensão da rede eléctrica (CA) (não aplicável para a Europa, os E.U.A., o Canadá, a Austrália e o Reino Unido)
主（AC）電源線路說明（不適用於歐洲、美國、加拿大、澳洲及英國型號）
تعليمات خط التيار الكهربائي الرئيسي (المتردد) (لا تنطبق على اوروبا والولايات المتحدة الامريكية وكندا واستراليا والمملكة المتحدة)

EN, SP, PR, CH, AR

0200MWMMDWJEM

Warnings, Cautions and Others
Avisos, precauciones y otras notas
Advertências, precauções e outras notas
警告，注意及其他須知事項
تحذيرات، تنبيهات واشياء اخرى

Caution — ⏻/I switch!
Disconnect the mains plug to shut the power off completely. The ⏻/I switch in any position does not disconnect the mains line. The power can be remote controlled.

Precaución — Interruptor ⏻/I
Desconectar el cable de alimentación para desactivar la alimentación totalmente. Cualquier que sea la posición de ajuste del interruptor ⏻/I, la alimentación no es cortada completamente. La alimentación puede ser controlada remotamente.

Precaução — Interruptor ⏻/I
Desconectar o cabo de alimentação para desligar a alimentação por completo. Qualquer que seja a posição de ajuste do interruptor ⏻/I, a alimentação não é completamente cortada. A alimentação pode ser controlada remotamente.

注意—⏻/I 開關！
無論⏻/I開關在任何位置，電源線路電源並沒有被切斷。若要將電源完全關閉，請把電源線從牆插拔。電源開關可用遙控器控制。

تحذير – ⏻/I الطاقة
انزع قابس الطاقة الكهربائية من اجل فصل الطاقة الكهربائية من الجهاز كليا. لا يفصل مفتاح الطاقة الكهربائية عندما يكون باي وضع ⏻/I الطاقة الكهربائية من الجهاز. يمكن التحكم من بعد بالطاقة الكهربائية.

COMPACT COMPONENT SYSTEM
SISTEMAS DE COMPONENTES COMPACTOS
SISTEMA DE COMPONENTE COMPACTO
小型組和系統
نظام اجهزة صوتية مركبة

MX-J500

Consists of CA-MXJ500 and SP-MXJ550
Consta del CA-MXJ500 el SP-MXJ550
Consta do CA-MXJ500 e SP-MXJ550
由 CA-MXJ500 及SP-MXJ550組成
يتكون الجهاز من CA-MXJ500 و SP-MXJ550

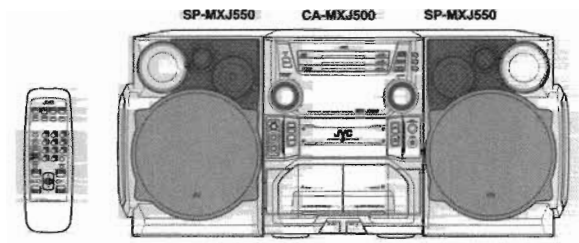

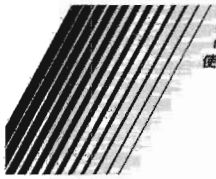

INSTRUCTIONS
MANUAL DE INSTRUCCIONES
INSTRUÇÕES
使用說明書
كتيّب تعليمات التشغيل

For Customer Use:
Enter below the Model No. and Serial No. which are located either on the rear, bottom or side of the cabinet. Retain this information for future reference.

Model No. _____

Serial No. _____

GVT0029-003A
[U, US, UT, UX]

CAUTION
To reduce the risk of electrical shocks, fire, etc.:
1. Do not remove screws, covers or cabinet.
2. Do not expose this appliance to rain or moisture.

PRECAUCIÓN
Para reducir riesgos de choques eléctricos, incendio, etc.:
1. No extraiga los tornillos, los cubiertas ni la caja.
2. No exponga este aparato a la lluvia o a la humedad.

PRECAUÇÃO
Para reduzir riscos de choques eléctricos, incêndio, etc.:
1. Não remova parafusos e tampas ou desmonte a caixa.
2. Não exponha este aparelho à chuva nem à umidade.

警告
為了減低觸電、火災等危險：
1. 請勿拆卸螺絲、蓋子或機箱。
2. 切勿讓本機受雨淋或置身潮濕中。

تحذير
لتجنب خطر الحريق، الصدمات الكهربائية، الخ.
١. لا تقم بفك البراغي، الاغطية او الصندوق.
٢. لا تقم بتعريض هذا الجهاز للمطر او الرطوبة.

Caution: Proper Ventilation
To avoid risk of electric shock and fire, and to prevent damage, locate the apparatus as follows:
1 Front: No obstructions and open spacing.
2 Sides/ Top/ Back: No obstructions should be placed in the areas shown by the dimensions below.
3 Bottom: Place on the level surface. Maintain an adequate air path for ventilation by placing on a stand with a height of 10 cm or more.

Precaución: el aparato debe estar bien ventilado
Para evitar posibles riesgos de descargas eléctricas e incendios y prevenir cualquier posible daño, coloque el aparato del modo siguiente:
1 Parte delantera: No ponga nada delante, dejo el espacio libre.
2 Laterales/ parte superior/ parte trasera: No se debería colocar nada en las áreas y las distancias que se detallan a continuación.
3 Parte inferior: Coloque el aparato sobre una superficie recta. Debe haber buena circulación de aire; para ello, coloque el aparato sobre una base a una altura mínima de 10 cm.

Precaução: Ventilação adequada
Para evitar riscos de choques eléctricos e incêndios, e prevenir avarias, instale o aparelho como segue:
1 Parte frontal: Sem obstruções e espaços abertos.
2 Partes laterais/Tampa/Posterior: Nenhuma obstrução deverá ser colocada entre as áreas cujas dimensões são indicadas abaixo.
3 Parte inferior: Instale-o sobre uma superfície plana. Deverá ser mantido espaço suficiente para a ventilação se este for instalado numa posição que tenha uma altura de 10 cm ou mais.

告誡：正確通風
為免發生觸電和火警的危險，及防止本機受損，請將本機如下放置：
1 前面： 沒有障物及地方開闊。
2 側面／頂面／背面： 在圖中所示範圍中，不應放置任何障礙物。
3 底部： 放置在水平面上。放置在一個高 10 厘米或以上的臺上，以保持足夠的通風道。

تحذير: التهوية الصحيحة
لتجنب حصول صدمات كهربائية واخطار الحريق ومنع حصول تلف وضرر للجهاز، رتّب الجهاز كما يلي:
١ الجهة الأمامية: يجب أن لا يكون هنالك عوائق ويجب ان تكون المنطقة مفتوحة امام الجهاز.
٢ الجهات الجانبية / العلوية / الخلفية: يجب عدم وضع عوائق في المناطق المبينة بالابعاد في الاسفل.
٣ القاعدة: يجب وضع الجهاز على سطح منبسط. اترك مسافة كافية من اجل التهوية بواسطة وضع الجهاز على حامل بارتفاع ١٠ سم او أكثر.

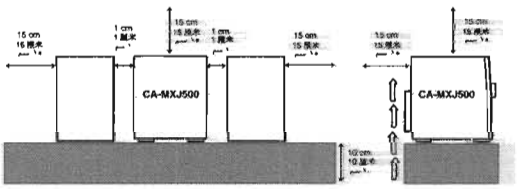

IMPORTANT FOR LASER PRODUCTS / IMPORTANTE PARA PRODUCTOS LÁSER / IMPOTANTE PARA PRODUTOS LASER / 雷射產品的重要說明 / مهم للمنتجات الليزرية

REPRODUCTION OF LABELS / REPRODUCCIÓN DE ETIQUETAS / REPRODUÇÃO DE ETIQUETAS
標籤內容說明 / نسخ الاستكات

① CLASSIFICATION LABEL, PLACED ON REAR ENCLOSURE
② WARNING LABEL, PLACED INSIDE THE UNIT

① ETIQUETA DE CLASIFICACIÓN, PEGADA EN LA PARTE POSTERIOR DE LA CAJA
② ETIQUETA DE ADVERTENCIA, PEGADA EN EL INTERIOR DE LA UNIDAD

① ETIQUETA DE CLASSIFICAÇÃO LOCALIZADA NA PARTE POSTERIOR DA CAIXA DO APARELHO.
② ETIQUETA DE ADVERTÊNCIA LOCALIZADA NA PARTE INTERNA DA UNIDADE.

① 分類標籤，貼在機殼背後。
② 警告標籤，貼於機內。

① لاصق التصنيف، موضوع على الغلاف الخلفي
② لاصقة التحذير، موضوع بداخل الجهاز

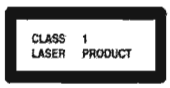

1. CLASS 1 LASER PRODUCT
2. DANGER: Invisible laser radiation when open and interlock failed or defeated. Avoid direct exposure to beam.
3. CAUTION: Do not open the top cover. There are no user serviceable parts inside the Unit; leave all servicing to qualified service personnel.

1. PRODUCTO LÁSER CLASE 1
2. PELIGRO: En el interior hay radiación láser invisible. Evite el contacto directo con el haz.
3. PRECAUCIÓN: No abra la tapa superior. En el interior de la unidad no existen piezas reparables por el usuario; deje todo servicio técnico en manos de personal calificado.

1. PRODUTO LASER CLASSE 1
2. PERIGO: Existe emissão de radiação invisível quando aberto e quando o dispositivo de segurança está avariado ou desativado. Evite a exposição direta ao feixe dos raios.
3. CUIDADO: Não abra a caixa do aparelho. Não existem peças reparáveis pelo usuário na parte interna da unidade. Solicite assistência técnica somente a pessoal técnico qualificado.

1. 一級雷射產品
2. 危險：當內部鎖定裝置失效或者損壞後，打開蓋板可能會有危害。
3. 注意：除有關調整裝置，本機內部沒有用戶可自行維修的零件。所有維修工作應由有資格的人員完成。

١. منتج ليزري
٢. خطر: اشعة ليزرية غير مرئية عند الفتح والاغلاق الفاشل او غير المسموح. تجنب التعرض المباشر للاشعة
٣. تحذير: لا تفتح الغطاء العلوي. ليس في داخل الجهاز اقسام يستطيع المستخدم صيانتها، اترك كافة الاعمال الصيانية الى مختص.

English

Introduction

We would like to thank you for purchasing one of our JVC products. Before operating this unit, read this manual carefully and thoroughly to obtain the best possible performance from your unit, and retain this manual for future reference.

About This Manual

This manual is organized as follows:

- **The manual mainly explains operations using the buttons and controls on the unit. You can also use the buttons on the remote control if they have the same or similar names (or marks) as those on the unit. If operation using the remote control is different from that using the unit, it is then explained.**
- Basic and common information that is the same for many functions is grouped in one place, and is not repeated in each procedure. For instance, we do not repeat the information about turning on/off the unit, setting the volume, changing the sound effects, and others, which are explained in the section "Common Operations" on pages 9 to 11.
- The following marks are used in this manual:

Gives you warnings and cautions to prevent damage or risk of fire/electric shock. Also gives you information which is not good for obtaining the best possible performance from the unit.

Gives you information and hints you had better know.

Precautions

Installation

- Install in a place which is level, dry and neither too hot nor too cold — between 5°C (41°F) and 35°C (95°F).
- Install the unit in a location with adequate ventilation to prevent internal heat built-up in the unit.
- Leave sufficient distance between the unit and the TV.
- Keep the speakers away from the TV to avoid interference with TV.

DO NOT install the unit in a location near heat sources, or in a place subject to direct sunlight, excessive dust or vibration.

Power sources

- When unplugging from the wall outlet, always pull the plug, not the AC power cord.

DO NOT handle the AC power cord with wet hands.

Moisture condensation

Moisture may condense on the lens inside the unit in the following cases:
- After starting heating in the room
- In a damp room
- If the unit is brought directly from a cold to a warm place

Should this occur, the unit may malfunction. In this case, leave the unit turned on for a few hours until the moisture evaporates, unplug the AC power cord, and then plug it in again.

Others

- Should any metallic object or liquid fall into the unit, unplug the unit and consult your dealer before operating any further.
- If you are not going to operate the unit for an extended period of time, unplug the AC power cord from the wall outlet.

DO NOT disassemble the unit since there are no user serviceable parts inside.

If anything goes wrong, unplug the AC power cord and consult your dealer.

Contents

English

Location of the Buttons and Controls 3
Front Panel 3
Remote Control 5
Getting Started 6
Unpacking 6
Putting the Batteries into the Remote Control 6
Connecting Antennas 6
Connecting Speakers 7
Connecting Other Equipment 8
Adjusting the Voltage Selector 8
Common Operations 9
Turning On or Off the Power 9
Setting the Clock 9
Setting the AM Tuner Interval Spacing 9
Selecting the Sources 9
Adjusting the Volume 10
Reinforcing the Bass Sound 10
Selecting the Sound Modes 10
Creating Your Own Sound Mode
— Manual Mode 11
Listening to FM and AM Broadcasts 12
Tuning in a Station 12
Presetting Stations 12
Tuning in a Preset Station 12
Playing Back CDs 13
Loading CDs 13
Playing Back the Entire Discs
— Continuous Play 13
Basic CD Operations 13
Programming the Playing Order of the Tracks
— Program Play 14
Playing at Random — Random Play 15
Repeating Tracks or CDs — Repeat Play 15
Prohibiting Disc Ejection — Tray Lock 15
Playing Back Tapes 16
Playing Back a Tape 16
Locating the Beginning of a Song — Music Scan 16
Recording 17
Recording a Tape on Deck B 17
Dubbing Tapes 18
CD Direct Recording 18
Auto Edit Recording 19
Using the Microphones 20
Singing Along 20
Using the Timers 21
Using Daily Timer 21
Using Recording Timer 22
Using Sleep Timer 23
Timer Priority 23
Maintenance 24
Troubleshooting 25
Specifications 26

English

Location of the Buttons and Controls

Become familiar with the buttons and controls on your unit.

Front Panel

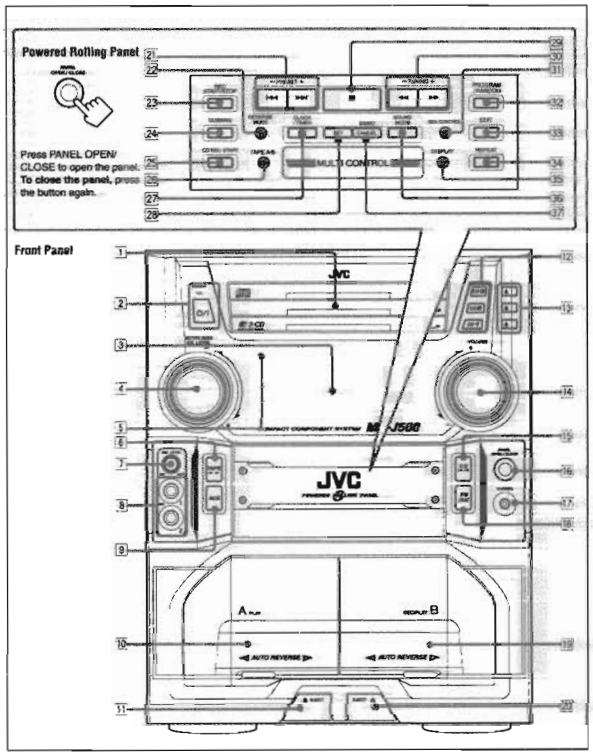

Continued

English

Display Window

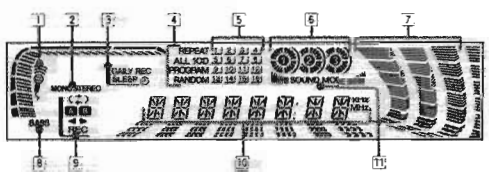

See pages in the parentheses for details.

Front Panel

1. Disc trays
2. ⏻/I (Standby/On) button and STANDBY lamp (9)
3. Display window
4. ACTIVE BASS EX. (extension) LEVEL control (10)
5. Remote sensor
6. TAPE ◄► button and lamp (19, 16)
   Pressing this button also turns on the unit.
7. MIC LEVEL control (20)
8. MIC 1 and MIC 2 jacks (20)
9. AUX button and lamp (9)
   Pressing this button also turns on the unit.
10. Deck A cassette holder (16)
11. ⏏ EJECT button for deck A (16)
12. Disc number buttons (CD1, CD2, and CD3) (13)
    Pressing one of these buttons also turns on the unit.
13. ⏏ (CD tray open/close) buttons (12)
    Pressing one of these buttons also turns on the unit.
14. VOLUME control (10)
15. CD ►/II (play/pause) button and lamp (9, 13)
    Pressing this button also turns on the unit.
16. PANEL OPEN/CLOSE button (9)
    Pressing this button also turns on the unit.
17. PHONES jack (10)
18. FM/AM button and lamp (9, 12)
    Pressing this button also turns on the unit.
19. Deck B cassette holder (16, 17)
20. EJECT ⏏ button for deck B (16, 17)

Powered Rolling Panel

21. PRESET – / + buttons (12)
    ⏮ / ⏭ (reverse search/forward search) buttons (9, 11, 14, 19, 21 – 23)
22. REVERSE MODE button (16 – 19)
23. REC START/STOP button (17, 19)
24. DUBBING button (18)
25. CD REC START button (18, 19)
26. TAPE A/B button (16)
27. CLOCK/TIMER button (9, 21 – 23)
28. SET button (9, 12, 21 – 23)
29. ■ (stop) button (13 – 19)
30. TUNING – / + buttons (12)
    ◄◄ / ►► (fast left/fast right) buttons (11, 14, 16)
31. SEA CONTROL button (11)
32. PROGRAM/RANDOM button (14, 15, 18)
33. EDIT button (19)
34. REPEAT button (15)
35. DISPLAY button (9)
36. SOUND MODE button (10)
37. CANCEL button (9, 15, 21)
    DEMO button (8)

Display window

1. Karaoke (🎤) and echo (≈) indicators
2. Timer operation indicators
   • MONO and STEREO indicators
3. Timer indicators
   • DAILY (Daily Timer), REC (Recording Timer), SLEEP, and ⏲ (Timer) indicators
4. CD play mode indicators
   • REPEAT (ALL/1CD/1), PROGRAM, and RANDOM indicators
5. CD track number indicators
6. Disc indicators
7. SEA (Sound Effect Amplifier) pattern indicator
8. BASS indicator (10)
9. Tape operation indicators
   • (🔁) (reverse mode), A/B (operating deck), ◄► (tape direction), and REC (recording) indicators
10. Main display
    • Shows the current time, frequency, etc.
11. SOUND MODE indicator

English

Remote Control

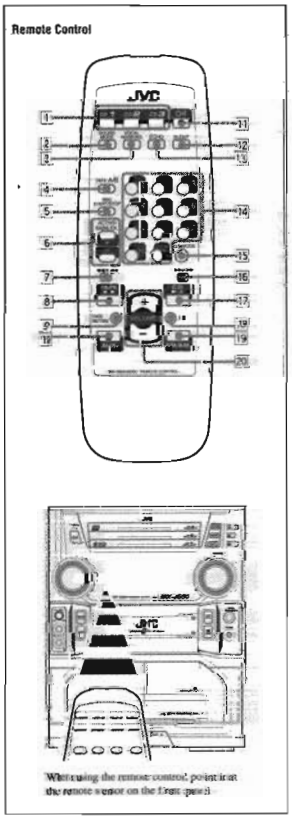

Remote Control

1. Disc number buttons (CD1, CD2, and CD3) (13)
   Pressing one of these buttons also turns on the unit.
2. SOUND MODE button (10)
3. VOCAL MASKING button (20)
4. TAPE A/B button (16)
5. REC START/STOP button (17, 19)
6. ACTIVE BASS EX. (extension) +/– buttons (10)
7. ◄◄ / ►◄ (fast left/reverse search) buttons (14 – 16)
8. TAPE ◄► button (9, 16)
   Pressing this button also turns on the unit.
9. FADE MUTING button (10)
10. AUX button (9)
    Pressing this button also turns on the unit.
11. ⏻/I (Standby/On) button (9)
12. SLEEP button (23)
13. ECHO button (20)
14. Number buttons (12, 14)
15. FM MODE button (12)
16. ►►I / ►► (forward search/fast right) button (14 – 16)
17. CD ►/II button (9, 13)
    Pressing this button also turns on the unit.
18. ■ (stop) button (13 – 19)
19. FM/AM button (9, 12)
    Pressing this button also turns on the unit.
20. VOLUME + / – buttons (10)

Getting Started

Continued

English

Unpacking

After unpacking, check to be sure that you have all the following items.
The number in the parentheses indicates the quantity of the pieces supplied.

- AM loop antenna (1)
- FM antenna (1)
- Remote control (1)
- Batteries (2)
- AC plug adaptor (except for Argentina: 1)

If any is missing, consult your dealer immediately.

Putting the Batteries into the Remote Control

Insert the batteries — R6(SUM-3)/AA(15F) — into the remote control by matching the polarity (+ and –) on the batteries with the + and – markings on the battery compartment.
When the remote control can no longer operate the unit, replace both batteries at the same time.

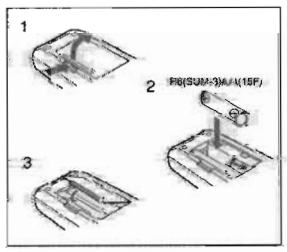

Caution

- DO NOT use an old battery together with a new one.
- DO NOT use different types of batteries together.
- DO NOT expose batteries to heat or flame.
- DO NOT leave the batteries in the battery compartment when you are not going to use the remote control for an extended period of time. Otherwise, it will be damaged from battery leakage.

Connecting Antennas

FM antenna

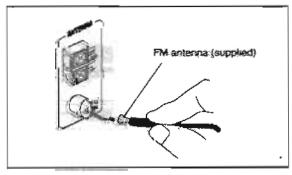

1 **Attach the FM antenna to the FM 75 Ω COAXIAL terminal.**

2 **Extend the FM antenna.**

3 **Fasten it up in the position which gives you the best reception, then fix it on the wall, etc.**

Notes

About the supplied FM antenna

The FM antenna supplied with this unit can be used as temporary measure. If reception is poor, you can connect an outdoor FM antenna.

To connect an outdoor FM antenna

Before connecting it, disconnect the supplied FM antenna.

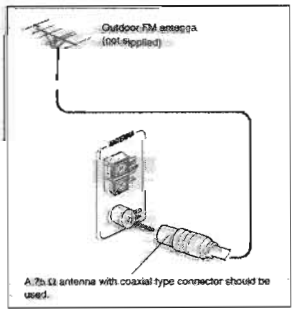

English

AM antenna

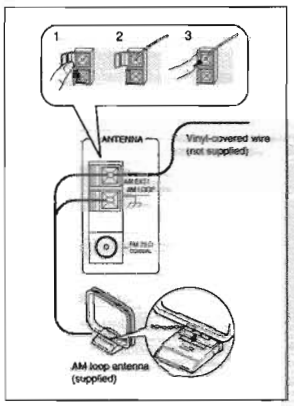

1 **Connect the AM loop antenna to the AM LOOP terminals as illustrated.**

2 **Turn the AM loop antenna until you have the best reception.**

To connect an outdoor AM antenna

When reception is poor, connect a single vinyl-covered wire to the AM EXT terminal and extend it horizontally. (The AM loop antenna must remain connected.)

For better reception of both FM and AM

- Make sure the antenna conductors do not touch any other terminals and connecting cords.
- Keep the antennas away from metallic parts of the unit, connecting cords, and the AC power cord.

Connecting Speakers

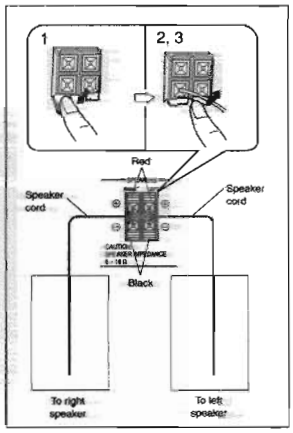

1 **Press and hold the clamp of the speaker terminal on the rear of the unit.**

2 **Insert the end of the speaker cord into the terminal.**
Match the polarity (color) of the speaker terminals: ⊕ to ⊕ and ⊖ to ⊖.

3 **Release the finger from the clamp.**

IMPORTANT: Use only speakers with the same speaker impedance as indicated by the speaker terminals on the rear of the unit.

English

Connecting Other Equipment

You can connect both analog and digital equipment.

- DO NOT connect any equipment while the power is on.
- DO NOT plug in any equipment until all connections are complete.

To connect an analog component

Be sure that the plugs of the audio cords are color coded: White plugs and jacks are for left audio signals, and red ones for right audio signals.

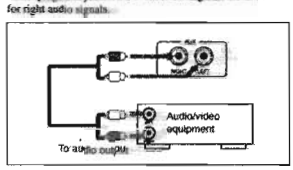

For playing the other equipment through this unit, connect between the audio output jacks on the other equipment and AUX jacks by using audio cords (not supplied).

Adjusting the Voltage Selector

Before plugging in the unit, set the correct voltage for your area with the voltage selector on the rear of the unit.

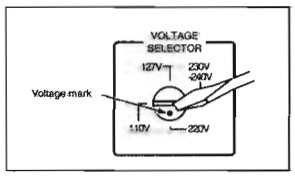

Use a screwdriver to rotate the voltage selector so the voltage number the voltage mark is pointing at is the same as the voltage where you are plugging in the unit. (See the back cover page.)

- DO NOT plug in before setting the voltage selector on the rear of the unit and all connection procedures are complete.

NOW, you can plug in the unit and other connected equipment FINALLY!

When connecting the AC power cord into a wall outlet, the unit automatically starts display demonstration.

- If the wall outlet does not match the AC plug, use the supplied AC plug adaptor (except for Argentina).

To stop the display demonstration, press any button on the unit or on the remote control.

To start the display demonstration manually
Press and hold DEMO for more than 2 seconds.

To stop the demonstration, press any button.

English

Common Operations

Turning On and Off the Power

To turn on the unit, press ⏻/I so that the STANDBY lamp goes off.

WELCOME

The Powered Rolling Panel opens automatically.

To turn off the unit (on standby), press ⏻/I again so that the STANDBY lamp lights up.

GOOD BYE

The Powered Rolling Panel also closes.
A little power is always consumed even while the unit is on standby.

To switch off the power supply completely, unplug the AC power cord from the AC outlet.

When you unplug the AC power cord or if a power failure occurs

The clock is reset to "0:00" right away, while the tuner preset stations (see page 12) will be erased in a few days.

Setting the Clock

Before operating the unit any further, first set the clock built in this unit.

On the unit ONLY:

1 Press PANEL OPEN/CLOSE.
The unit is turned on and the Powered Rolling Panel opens automatically.

2 Press CLOCK/TIMER.

0:00

The hour digits start flashing on the display.

3 Press ⏮ or ⏭ to adjust the hour, then press SET.

19:00

- If you want to correct the hour after pressing SET, press CANCEL. The hour digits start flashing again.

4 Press ⏮ or ⏭ to adjust the minute, then press SET.

CLOCK OK

To check the clock time

Press DISPLAY while playing any source.

- Each time you press the button, the source indication and the clock time alternate on the display.

To adjust the clock again

If you have adjusted the clock before, you need to press CLOCK/TIMER repeatedly until the clock setting mode is selected.

- Each time you press the button, the clock/timer setting modes change as follows:

DAILY → ON TIME → REC → ON TIME → Clock setting → Canceled → DAILY

(The hour digits start flashing.)

If there is a power failure

The clock loses the setting and is reset to "0:00." You need to set the clock again.

Setting the AM Tuner Interval Spacing

Some countries space AM stations 9 kHz apart, and some countries use 10 kHz spacing.

On the unit ONLY:

You can only change the AM tuner interval spacing while tuning into an AM station.

Press ⏻/I while holding down ■.

- Each time you press the button, the AM tuner interval spacing alternates between 9 kHz and 10 kHz.

Selecting the Sources

To listen to the FM/AM broadcasts, press FM/AM. (See page 12.)
To play back CDs, press CD ►/II. (See pages 13 – 15.)
To play back tapes, press TAPE ◄► (See page 16.)
To select the external equipment as the source, press AUX.

When you press the play button for a particular source (FM/AM, CD ►/II, AUX, and TAPE ◄►), the unit turns on, and the Powered Rolling Panel opens automatically (and the unit starts playing the source if it is ready — CONPU PLAY CONTROL).

English

Continued

Adjusting the Volume

You can adjust the volume level only while the unit is turned on.

Turn the VOLUME control clockwise to increase the volume or counterclockwise to decrease it.

- The volume level can be adjusted in 32 steps (MIN, VOL 1 — VOL 30, and MAX).

VOL 15

When using the remote control, press VOLUME + to increase the volume or press VOLUME – to decrease it.

For private listening

Connect a pair of headphones to the PHONES jack. No sound comes out of the speakers. Be sure to turn down the volume before connecting or putting on headphones.

DO NOT turn off (on standby) the unit with the volume set to an extremely high level, otherwise, a sudden blast of sound can damage your hearing, speakers and/or headphones when you turn on the unit or start playing any source next time. REMEMBER to always adjust the volume level while the unit is on standby.

To turn down the volume level temporarily

Press FADE/MUTING on the remote control.
The volume level gradually decreases to "MIN."
To restore the sound, press the button again.

Reinforcing the Bass Sound

The ACTIVE BASS EX. (extension) LEVEL control provided for this unit can maintain the richness and fullness of the bass sound while listening to any source at low volume.
This function only affects the playback sound, but does not affect your recording.

Turn the ACTIVE BASS EX. LEVEL control clockwise to increase the bass sound or counterclockwise to decrease it.

- The bass sound level can be adjusted in 4 steps (BASS 1 — BASS 3, and MAX).

BASS 3

BASS indicator always lights up when the unit is on.

When using the remote control, press ACTIVE BASS EX. + to increase the bass sound level or press ACTIVE BASS EX. – to decrease it.

To cancel the Active Bass Extension, turn the control counterclockwise until "BASS OFF" appears.

Selecting the Sound Modes

You can select one of the 6 preset sound modes (3 surround modes and 3 SEA — Sound Effect Amplifier — modes). This function only affects the playback sound, but does not affect your recording.

To select the sound modes, press SOUND MODE until the sound mode you want appears on the display. The SOUND MODE indicator also lights up on the display.

D.CLUB

- Each time you press the button, the sound modes change as follows:

D.CLUB (Dance CLUB) → HALL → STADIUM → ROCK → POP → CLASSIC → MANUAL 1 → MANUAL 2 → MANUAL 3 → OFF (Canceled) → D.CLUB

English

Surround modes *:
D.CLUB: Increases resonance and bass.
HALL: Adds depth and brilliance to the sound.
STADIUM: Adds clarity and spreads the sound, like in an outdoor stadium.

SEA (Sound Effect Amplifier) modes:
ROCK: Boosts low and high frequency. Good for acoustic music.
POP: Good for vocal music.
CLASSIC: Good for classical music.

Manual modes:
MANUAL 1/2/3: Your individual mode stored to memory. See "Creating Your Own Sound Mode — Manual Mode."
OFF: Cancels the sound mode.

* Surround elements are added to the SEA elements to create a being there feeling in your room.
When one of these modes is selected, the SOUND MODE indicator lights up as — SOUND MODE

While one of the SEA modes including manual modes (SEA elements without surround elements) is selected, it lights up as — SOUND MODE

Creating Your Own Sound Mode — Manual Mode

You can change SEA pattern to suit your preference. These changed settings can be stored in the MANUAL 1, 2, and 3 modes.

- There is a time limit in doing the following steps. If the setting is canceled before you finish, start from step 1 again.
- **If you want to add the surround elements in your SEA pattern,** select one of the surround modes (D.CLUB, HALL, or STADIUM) before starting the procedure below.

On the unit ONLY:

1 **Press and hold SEA CONTROL until "SEA CONT" appears on the display.**

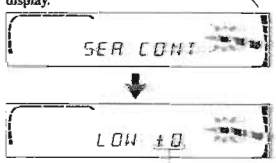

Current level appears.

2 **Adjust the SEA pattern.**

1) Press ⏮ or ⏭ to select the frequency range to adjust (LOW, MID, HIGH).
2) Press ◀◀ or ▶▶ to adjust the level (–3 to +3) of the selected frequency range.
3) Repeat steps 1) and 2) to adjust the level of the other frequency ranges.

3 **Press SEA CONTROL again.**

4 **Press ⏮ or ⏭ to select one of the MANUAL 1, 2, and 3 modes into which you want to store the SEA pattern.**

5 **Press SEA CONTROL again.**

The SOUND MODE indicator also lights up.
The SEA pattern you have created are stored into the MANUAL mode selected in the above step.

To use your own sound mode
Select MANUAL 1, 2, or 3 mode when using the sound modes. See "Selecting the Sound Modes" on page 10.

Listening to FM and AM Broadcasts

English

Tuning in a Station

1 **Press FM/AM.**
The unit automatically turns on and tunes in the previously tuned station (either FM or AM). The Powered Rolling Panel automatically opens.
- Each time you press the button, the band alternates between FM and AM.

2 **Start searching for stations.**
On the unit:
Press and hold TUNING – / + for more than 1 second.
On the remote control:
Press and hold ◀◀ / ⏮ or ⏭ / ▶▶ for more than 1 second.
The unit starts searching for stations and stops when a station of sufficient signal strength is tuned in. If a program is broadcast in stereo, the STEREO indicator lights up.

To stop during searching, press TUNING – / + (or ◀◀ / ⏮, ⏭ / ▶▶).

When you press TUNING – / + (or ◀◀ / ⏮, ⏭ / ▶▶) briefly and repeatedly
The frequency changes step by step.

To change the FM reception mode
When an FM stereo broadcast is hard to receive or noisy, press FM MODE on the remote control so that the MONO indicator lights up on the display. Reception improves.

To restore the stereo effect, press FM MODE again so that the MONO indicator goes off.
In this stereo mode, you can hear stereo sounds when a program is broadcast in stereo.

Presetting Stations

You can preset 30 FM and 15 AM stations.
In some cases, test frequencies have been already memorized for the tuner since the factory examined the tuner preset function before shipment. This is not a malfunction. You can preset the stations you want into memory by following the presetting method.
- There is a time limit in doing the following steps. If the setting is canceled before you finish, start from step 1 again.

On the unit ONLY:

1 **Tune in the station you want to preset.**
- See "Tuning in a Station."

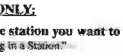

2 **Press SET.**

3 **Press PRESET – / + to select a preset number.**

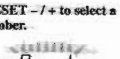

4 **Press SET again.**

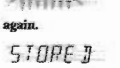

The tuned station in step 1 is stored in the preset number selected in step 3.
- Storing a new station on a used number erases the previously stored one.

When you unplug the AC power cord or if a power failure occurs
The preset stations will be erased in a few days. If this happens, preset the stations again.

Tuning in a Preset Station

1 **Press FM/AM.**
The unit automatically turns on and tunes in the previously tuned station (either FM or AM). The Powered Rolling Panel automatically opens.
- Each time you press the button, the band alternates between FM and AM.

2 **Select a preset number.**
On the unit:
Press PRESET – / +.
On the remote control:
Press the number buttons.
For preset number 5, press 5.
For preset number 15, press +10, then 5.
For preset number 20, press +10, then 10.
For preset number 25, press +10, +10, then 5.
For preset number 30, press +10, +10, then 10.

English

Playing Back CDs

Loading CDs

On the unit ONLY:

1 **Press ⏏ for the disc tray (CD1 to 3) you want to load a CD onto.**
The unit automatically turns on and the disc tray comes out. The Powered Rolling Panel also opens automatically.

2 **Place a disc correctly on the circle of the disc tray, with its label side up.**

- When using a CD single (8 cm), place it on the inner circle of the disc tray.

3 **Press the same ⏏ you have pressed in step 1.**
The disc tray closes, and the corresponding disc indicator (CD1 to CD3) lights up on the display.

4 **Repeat steps 1 to 3 to place other CDs.**

When loading more than one CD continuously
When you press ⏏ for the next tray you want to place another CD onto, the first disc tray automatically closes and then the next tray comes out.

About the disc indicators
Each disc indicator corresponds to the disc tray of the same number.

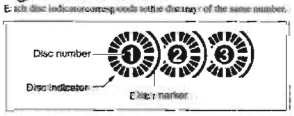

- The disc number lights up for the disc number you have selected.
- The disc indicator flashes while the corresponding CD is being played.
- The disc indicator goes off when the unit has detected that there is no CD on the corresponding disc tray.

Playing Back the Entire Discs — Continuous Play

You can play CDs continuously.

1 **Load CDs.**

2 **Press one of the disc number buttons (CD1, CD2, and CD3) for the disc you want to play.**
CD play starts from the first track of the selected disc.

- Pressing CD ▶ / II instead of the disc number buttons starts playing back if a CD is on the trays.

To stop during play, press ■.

To remove the disc, press ⏏ for the corresponding disc tray.

CD playback sequence
When 3 CDs are loaded on the disc trays, they are played in one of the following sequences.
- When CD1 is pressed: CD1 ⇒ CD2 ⇒ CD3 (then stops)
- When CD2 is pressed: CD2 ⇒ CD3 ⇒ CD1 (then stops)
- When CD3 is pressed: CD3 ⇒ CD1 ⇒ CD2 (then stops)
- When only 2 CDs are loaded, they are played in the same order, but the disc tray without a CD is skipped.

Basic CD Operations

While playing a CD, you can do the following operations.

To exchange CDs during playback of another
Press ⏏ for corresponding disc (CD1 not playing) to already currently to eject and exchange the CD.
If you exchange CDs during play, the current play will not stop until all CDs you have exchanged are played.

To stop play for a moment
Press CD ▶ / II.
While pausing, the elapsed playing time flashes on the display.
To resume play, press CD ▶ / II again.

Continued

English

To locate a particular point in a track
During play, press and hold ◀◀ or ▶▶.
- ◀◀: Fast reverses the disc.
- ▶▶: Fast forwards the disc.

When using the remote control, press and hold ◀◀ / ⏮ or ▶▶ / ⏭.

To go to another track
Press ⏮ or ⏭ repeatedly before or during playback.
- ⏮: Goes back to the beginning of the current or previous tracks.
- ⏭: Skips to the beginning of the next or succeeding tracks.

When using the remote control, press ◀◀ / ⏮ or ▶▶ / ⏭.

If you press and hold ⏮ / ⏭ (or ◀◀ / ⏮ or ▶▶ / ⏭) before playing
You can change the tracks continuously.

To go to another track directly using the number buttons
Pressing the number button(s) before or during play allows you to start playing the track number you want.
Ex.: For track number 5, press 5.
For track number 15, press +10, then 5.
For track number 20, press +10, then 10.
For track number 32, press +10, +10, +10, then 2.

Programming the Playing Order of the Tracks — Program Play

You can arrange the order in which tracks play before you start playing. **You can program up to 32 tracks.**
- To use Repeat play (see page 15) for Program play, press REPEAT after starting Program play.

1 **Load CDs.**
- If the current playing source is not the CD player, press CD ▶ / II, then ■ before going to the next step.

2 **Press PROGRAM/RANDOM repeatedly until "PROGRAM" appears on the display.**

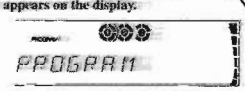

- If a program has been stored in memory, the program is called up.
- Each time you press the button, CD play mode changes as follows:

Program Play ⇒ Random Play ⇒ Continuous Play ⇒

3 **Press one of the disc number buttons (CD1, CD2, and CD3) to select the disc number you want to play.**

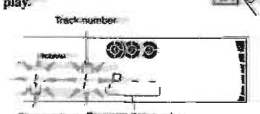

4 **Select a track from the CD selected in the above step.**
On the unit:
Press ⏮ or ⏭ to select the track number, then press SET.

On the remote control:
Press the number buttons.
- For how to use the number buttons, see "To go to another track directly using the number buttons" described to the left.

5 **Program other tracks you want.**
- To program tracks from the same disc, repeat step 4.
- To program tracks from a different disc, repeat steps 3 and 4.

6 **Press CD ▶ / II.**
The tracks are played in the order you have programed.

To stop during play, press ■.

To exit from Program play mode, press PROGRAM/RANDOM repeatedly again before or after play so that the unit enters a normal play mode. (The program you have made is stored in memory until you turn off the unit or erase the program.)

English

To check the program contents

Before playing, you can check the program contents by pressing ⏮/⏮⏮ or ⏭/⏭⏭ on the remote control.

- ⏭/⏭⏭: Shows the programed tracks in the programed order.
- ⏮/⏮⏮: Shows them in the reverse order.

To modify the program

Before playing, you can erase the programed tracks shown on the display by pressing CANCEL.

- Each time you press the button, the programed track shown on the display is erased from the program.

To add tracks in the program before play, simply select the track numbers you want to add by following step 4 of the programming procedure on page 14.

To erase the entire program before or after play, press ■. "PROGRAM" appears on the display.

- Ejecting a CD will also erase the track numbers programed from the ejected CD.

If you try to program a 33rd track
"FULL" will appear on the display.

If your entry is ignored
You have tried to program a track from an empty tray, or a track number that does not exist on the CD (for example, selecting track 14 on a CD that only has 12 tracks). Such entries are ignored.

Playing at Random — Random Play

The tracks of all loaded CDs will play at random.

- To use Repeat play for Random play, press REPEAT after starting Random play.

1 Load CDs.

- If the current playing source is not the CD player, press CD ▶/II, then ■ before going to the next step.

2 Press PROGRAM/RANDOM repeatedly until "RANDOM" appears on the display.

RANDOM

- Each time you press the button, CD play mode changes as follows:

Program Play → Random Play → Continuous Play →

3 Press CD ▶/II.

The tracks are played at random.
Random play ends when all the tracks are played once.

To skip the currently playing track, press ⏭ (or ⏭/⏭ on the remote control).

To stop during play, press ■.

- Random play also stops when one of the disc trays is opened.

To exit from Random play mode, press PROGRAM/RANDOM repeatedly again before or after play so that the unit enters another play mode.

Even if you press ⏮ (or ⏮/⏮ on the remote control)
You cannot go back to the previous tracks during Random play.

Repeating Tracks or CDs — Repeat Play

You can have all the CDs, the program or the individual track currently playing repeat as many times as you like.

To repeat play, press REPEAT during or before playing. To use Repeat play for Program play and Random play, press the button after starting playback.

- Each time you press the button, Repeat play mode changes as follows, and the following indicator lights up on the display:

REPEAT ALL → REPEAT 1CD → REPEAT 1 → Canceled (Continuous play)

REPEAT ALL: Repeats all the tracks on all the CDs (continuously or at random), or all the tracks in the program.
REPEAT 1CD*: Repeats all the tracks on one CD.
REPEAT 1: Repeats one track on one CD.

* REPEAT 1CD is not used for Program play and Random play.

To cancel Repeat play, press REPEAT repeatedly until the REPEAT indicator (REPEAT ALL, REPEAT 1CD, or REPEAT 1) goes off from the display.

* Repeat play is also canceled when you select Program play or Random play.

Prohibiting Disc Ejection — Tray Lock

You can prohibit CD ejection from the unit and can lock CDs.

- This operation is possible only using the buttons on the unit.

To prohibit disc ejection, press ⏏ for any disc tray while holding ■. (If there is any disc tray opened, close it first.) "LOCKED" appears for a while, and the loaded CDs are locked.

To cancel the prohibition and unlock the CDs, press ⏏ for any disc tray while holding ■.
"UNLOCKED" appears for a while, and the loaded CDs are unlocked.

If you try to eject CDs
"LOCKED" appears to inform you that the Tray Lock is in use.

Playing Back Tapes

English

You can play back type I, type II, and type IV tapes without changing any settings.

Playing Back a Tape

1 Press EJECT (⏏) for the deck you want to use.

2 Put a cassette in, with the exposed part of the tape down.

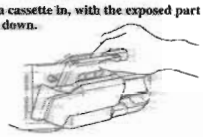

3 Close the cassette holder gently.

If you put cassettes in both decks A and B, the last deck you have put a cassette into is selected.
To operate the other deck, press TAPE A/B.

4 Press TAPE ◀ ▶.

The tape play starts and the tape direction indicator (◀ ▶) starts flashing slowly to indicate the tape running direction.

- Each time you press the button, the tape direction changes.
  - ▶ : plays the front side.
  - ◀ : plays the reverse side.

When the tape plays to the end, the deck automatically stops if the Reverse Mode is not on. (See "To play both sides repeatedly — Reverse Mode.")

To stop during play, press ■.

To operate the other deck, press TAPE A/B, then TAPE ◀ ▶.

To fast wind to the left or to the right, press ⏮/⏭ (⏮/⏮ or ⏭/⏭ on the remote control) while the tape is not running.
The tape direction indicator (◀ ▶) starts flashing quickly on the display.

To remove the cassette, press ⏏ EJECT for deck A or EJECT ⏏ for deck B.

To play both sides repeatedly — Reverse Mode

Reverse Mode works for both decks at the same time. When it is in use, the tape automatically reverses at the end of a side and the unit starts playing the other side of the tape, and repeats the same process.

To use Reverse Mode, press REVERSE MODE so that the Reverse Mode indicator on the display lights up like — (⇄)

To cancel Reverse Mode, press the button again so that the Reverse Mode indicator on the display lights up like — →

When Reverse Mode is on with cassettes in both decks A and B
After the reverse (◀) side of the tape finishes playing, the tape on the other deck starts playing.

Locating the Beginning of a Song — Music Scan

You can use Music Scan to locate the beginning of a song. Music Scan searches for blank portions that usually separate recorded songs, then plays the next song.

To find the beginning of the current song

During play, press ⏮/⏭ (⏮/⏮ or ⏭/⏭ on the remote control) in the **opposite direction** to the tape play.
The tape direction indicator of the opposite direction to the tape play starts flashing slowly.

Searching stops automatically at the beginning of the current song, and the current song starts automatically.

To find the beginning of the next song

During play, press ⏮/⏭ (⏮/⏮ or ⏭/⏭ on the remote control) in **the same direction** as the tape play.
The tape direction indicator of the same direction as the tape play starts flashing slowly and quickly alternately.

Searching stops automatically at the beginning of the next song, and the next song starts automatically.

Music Scan works by detecting a 4-second long blank between each song, so it will not work well in the following cases.

- No blank at the beginning of a song.
- Noise (often caused by much one or poor quality dubbing) which fills the blank.
- Long, very soft passages or pauses in a song.

The use of the C-120 or thinner tape is not recommended, since characteristic deterioration may occur and this tape easily jams in the pinch-rollers and the capstans.

English

Recording

IMPORTANT:

- **It may be unlawful to record or play back copyrighted material without the consent of the copyright owner.**
- The recording level is automatically set correctly, so it is not affected by the VOLUME control and the ACTIVE BASS EX. LEVEL control. Thus, during recording you can adjust the sound you are actually listening to without affecting the recording level.
- While recording, you can hear sound modes through the speakers or headphones. However, the sound is recorded without these effects (see page 10).
- If recordings you have made have excessive noise or static, the unit may be too close to a TV. Increase the distance between the TV and the unit.
- You can use type I and II tapes for recording.

To protect your recording

Cassettes have two small tabs on the back to protect unexpected erasure or re-recording.
To protect your recording, remove these tabs.
To re-record on a protected tape, cover the holes with adhesive tape.
When using type II tape, be careful not to cover the holes used to detect the tape type.

To keep the best recording and playback sound quality

If the heads, capstans, and pinch rollers of the cassette decks become dirty, the following will occur:

- Impaired sound quality
- Discontinuous sound
- Fading
- Incomplete erasure
- Difficulty in recording

To clean the heads, capstans, and pinch rollers
Use a cotton swab moistened with alcohol.

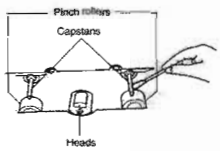

To demagnetize the heads
Turn off the unit, and use a head demagnetizer (available at electronics and record shops).

Recording a Tape on Deck B

1 Press EJECT ⏏ for the deck B.

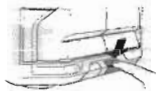

2 Put in a recordable cassette, with the exposed part of the tape down.

3 Close the cassette holder gently.

4 Check the tape direction of deck B.

- If the tape direction is not correct, press TAPE ◀ ▶ twice then ■ to change the tape direction.

5 Start playing the source — FM, AM*, CD player, deck A, or auxiliary equipment connected to AUX jacks.

- When the source is CD, you can also use CD Direct Recording (see page 18) and Auto Edit Recording (see page 19).
- When the source is deck A, you can also use the dubbing method. (See "Dubbing Tapes" on page 18.)

* See "To record an AM station — Beat Cut" on page 18.

6 Start recording.
On the unit:
Press REC START/STOP.
On the remote control:
Press and hold REC START/STOP for more than 1 second.
The REC (recording) indicator lights up on the display and recording starts.

To stop during recording, press REC START/STOP again or ■.

To remove the cassette, press EJECT ⏏ for deck B.

To record on both sides — Reverse Mode

Press REVERSE MODE so that the Reverse Mode indicator lights up as — (⇄)

- When using the Reverse Mode for recording, start recording in the forward (▶) direction first. Otherwise, recording will stop when recording is done only on one side (reverse) of the tape.

To cancel Reverse Mode, press the button again so that the Reverse Mode indicator lights up as — →

Continued

English

To record an AM station — Beat Cut

While recording an AM broadcast, beats may be heard (which are never heard when listening to the broadcast without recording it).
If this occurs, press PROGRAM/RANDOM repeatedly, while recording, until the beats are reduced.

- Each time you press the button, the display changes to show the following:

CUT1 → CUT2 → CUT3

Dubbing Tapes

It is preferable that the tape type (type I or II) you record from be the same as the tape type you record onto when dubbing tapes.

1 Press TAPE ◀ ▶, then ■.

2 Put the source cassette in deck A, and a recordable cassette into deck B.

- Put the cassettes in both decks so that the tapes will run in the forward (▶) direction.

3 Press DUBBING.

Dubbing starts.

To stop during dubbing, press ■.

To record on both sides — Reverse Mode

Press REVERSE MODE so that the Reverse Mode indicator lights up as — (⇄)

To cancel Reverse Mode, press the button again so that the Reverse Mode indicator lights up as — →

CD Direct Recording

Everything on the CD goes onto the tape in the order it is on the CD, or according to the order you have made for Program play.

1 Put a recordable cassette into deck B.

2 Place a disc correctly on the circle of the disc tray, with its label side up.

3 Press one of the disc number buttons (CD1 to CD3) to select the disc, then ■.

4 Press CD REC START.

"CD REC" appears, and the REC (recording) indicator lights up on the display.
Deck B starts recording and the CD player starts playing.
When the recording is done, "CD REC FINISHED" appears on the display, and the CD player and deck B stop.

To stop during CD Direct Recording, press ■ or REC START/STOP.

To record on both sides — Reverse Mode

Press REVERSE MODE so that the Reverse Mode indicator lights up as — (⇄)

- When using the Reverse Mode for CD Direct Recording, start recording in the forward (▶) direction first. When the tape reaches its end while recording a song in the forward direction (▶), the last song will be recorded at the beginning of the reverse side (◀).
  If you start recording on the reverse side (◀), recording will stop when recording is done only on one side (reverse) of the tape.

To cancel Reverse Mode, press the button again so that the Reverse Mode indicator lights up as — →

English

Auto Edit Recording

By using Auto Edit Recording, you can record the CD tracks to fit the tape. Auto Edit Recording makes a program by selecting the CD tracks in numerical order. However, to prevent the end of the last track on the front side from being cut off, the last track is selected so as to fit on the remaining tape length.

On the unit ONLY:

1 Load CDs.
- If the current playing source is not the CD player, press CD ►/II, then ■ before going to the next step.

2 Press EDIT.

3 Press the disc number button (CD1 to CD3) for the disc you want to record from.

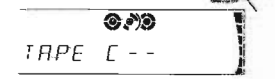

The optimum tape length for the disc appears.

To change the tape length manually
If the tape length selected is not satisfactory, you can change the tape length by pressing ⏮ or ⏭.
You can select the tape length among the following — 40, 46, 50, 54, 60, 64, 70, 74, 80, 84, and 90.

4 Press SET.

Tracks to be recorded on the reverse side (SIDE-B) appear.

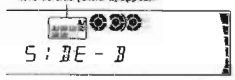

- Each time you press the button, the tracks to be recorded on the front side (SIDE-A) and on the reverse side (SIDE-B) alternate.

5 Put a recordable cassette of appropriate length into deck B.

6 Press REVERSE MODE so that the Reverse Mode indicator lights up as (⇄).
- Without turning on the Reverse Mode (⇄), recording will stop when the front side of the tape is recorded.

7 Press CD REC START.
The REC (recording) indicator lights up on the display.
Deck B starts recording then, about 10 seconds later, the CD player starts playing.
When the recording is done, "CD REC FINISHED" appears on the display, and the CD player and deck B stop.
- If a tape has not been rewound, deck B will rewind the tape before it starts recording.
- A 10-second blank portion is automatically created at the beginning of each side of the tape.

To stop during Auto Edit Recording
Press ■ or REC START/STOP so that a 4-second blank portion is created on the recorded tape. (Remember a 4-second blank is important when using Music Scan — see page 16.)

To cancel Auto Edit Recording
Press CANCEL before or after play.
- Pressing one of the following buttons will also cancel Auto Edit Recording — ■, REC START/STOP, and PROGRAM/RANDOM.

Using the Microphones

English

You can enjoy singing along (Karaoke) and microphone mixing by using two microphones.
- The MIC LEVEL control adjustment is valid for both microphones connected the MIC 1 and MIC 2 jacks.

IMPORTANT:
- Always set the MIC LEVEL to MIN when connecting or disconnecting the microphone.
- When you do not use the microphone, keep the microphones unconnected.

Singing Along

Vocal Masking
Vocal Masking reduces the lead vocal of the playing source, and allows you to replace it by singing into the microphones as the music plays.

1 Rotate the MIC LEVEL to MIN.

2 Connect the microphone(s) (not supplied) by plugging it into the MIC 1 and/or MIC 2 jack.

3 Press VOCAL MASKING on the remote control.
The karaoke indicator (🎤) lights up on the display.

4 Start playing the source — CD, tape, or other connected component.

5 Rotate the MIC LEVEL and VOLUME controls as you sing into the microphone(s).
- By pressing REC START/STOP, you can record your singing along if you want. (For more details, see page 17.)

To apply an echo to your voice
Press ECHO on the remote control so that the echo (🎤) indicator lights up on the display.
Each time you press the button, the echo level changes as follows:

ECHO 1 → ECHO 2 → ECHO 3 → ECHO OFF (Canceled) →

As the number increases, a stronger echo effect applies to your voice.

If howling or squealing (feedback) occurs while using the microphone(s)
Take the following actions to prevent these noises.
- Adjust the MIC LEVEL and VOLUME controls.
- Avoid pointing the microphone(s) towards the speakers.
- When two microphones are connected, turn off the On/Off switch on the unused microphone.

If you use the following sources as the playing source for Vocal Masking, you cannot get the satisfactory results:
- Radio programs — a radio signal is not as reliable as the signals coming from a tape or CD.
- Monaural sources.
- Poorly dubbed tapes.
- Sources recorded with piano, strong echo, a chorus, or only a few instruments.

Microphone mixing
When you sing along with multiplex tapes or CDs, follow the procedure below:

On the unit ONLY:

1 Rotate the MIC LEVEL to MIN.

2 Connect the microphone(s) (not supplied) by plugging it into the MIC 1 and/or MIC 2 jack.

3 Start playing the source — CD, tape or other connected component.

4 Rotate the MIC LEVEL and VOLUME controls as you sing into the microphone(s).
- By pressing REC START/STOP, you can record your singing along if you want. (For more details, see page 17.)

To use microphone only
Without any background sound, you can use your microphone(s), and record it if you want.

1 **Rotate the MIC LEVEL to MIN.**
2 **Connect the microphone(s) (not supplied) by plugging it into the MIC 1 and/or MIC 2 jack.**
3 **Press CD ►/II, then ■.**
No background sound will be heard.
4 **Rotate the MIC LEVEL and VOLUME controls as you sing or speak into the microphone(s).**

English

Using the Timers

There are three timers available — Recording Timer, Daily Timer, and Sleep Timer.

Before using the timers, you need to set the clock built in the unit. (See page 9.)

Using Daily Timer

With Daily Timer, you can wake to your favorite music or radio program.

How Daily Timer actually works
The unit automatically turns on, set the volume level to the preset level, and starts playing the specified source when the on-time comes (the ⏲ indicator flashes just before the on-time, and continues flashing while the timer is operating). Then, when the off-time comes ("OFF" flashes just before the off-time), the unit automatically turns off (stands by).
The timer setting remains in memory until you change it.
- There is a time limit in doing the following steps. If the setting is canceled before you finish, start from step 1 again.
- If you have made a mistake while setting timer, press CANCEL. (However, this does not always work. If CANCEL does not work, press CLOCK/TIMER repeatedly and start from step 1 again.)

Before you start...
- *When using a CD as the source to play,* make sure there is a CD on the selected disc number tray.
- *When using a tape as the source to play* —
  – Make sure that a tape is in the deck whose deck indicator (A or B) is lit on the display.
  – Make sure that the tape direction is correct.
- *When using the external component as the source to play,* set the timer equipped with the external component at the same time.

On the unit ONLY:

1 Press CLOCK/TIMER until "DAILY" appears on the display.
The DAILY (Daily Timer) indicator also starts flashing on the display.

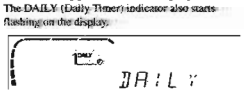

- Each time you press the button, the timer setting modes change as follows:

DAILY → ON TIME → REC → Canceled → Clock setting (See page 9) → ON TIME →

2 Press CLOCK/TIMER again.
"ON TIME" appears for 2 seconds, then the unit enters on-time setting mode.

3 Set the on-time you want the unit to turn on.
1) Press ⏮ or ⏭ to set the hour, then press SET.
2) Press ⏮ or ⏭ to set the minute, then press SET.
"OFF TIME" appears for 2 seconds, then the unit enters off-time setting mode.

4 Set the off-time you want the unit to turn off (on standby).
1) Press ⏮ or ⏭ to set the hour, then press SET.
2) Press ⏮ or ⏭ to set the minute, then press SET.
The unit enters source selecting mode.

5 Press ⏮ or ⏭ to select the source to play, then press SET.
- Each time you press ⏮ or ⏭, the source changes as follows:

TUNER FM → TUNER AM → AUX → TAPE → CD →

TUNER FM: tunes into a specified preset FM station. → go to step 6.
TUNER AM: tunes into a specified preset AM station. → go to step 6.
– CD: plays a disc of a specified track of a specified disc. → go to step 6.
TAPE: plays tape in deck A or B. → go to step 7.
AUX: plays an external source. → go to step 7.

Continued

English

6 When selecting "CD --"
1) Press ⏮ or ⏭ to select the disc number, then press SET.
2) Press ⏮ or ⏭ to set the track number, then press SET.
The unit enters volume setting mode.

When selecting "TUNER FM" or "TUNER AM"
Press ⏮ or ⏭ to select a preset station number, then press SET.
The unit enters volume setting mode.

7 Press ⏮ or ⏭ to set the volume level.
- You can select the volume level from among the following — "VOL --", "VOL 5", "VOL 10", and "VOL 15".
If you select "VOL --", the volume is set to the last level when the unit has been turned off.

8 Press SET to complete the Daily Timer setting.
The DAILY (Daily Timer) indicator stops flashing and remains on. The settings you have done are shown on the display in sequence.

9 Press ⏻/I to turn off the unit (on standby) if you have set the Daily Timer with the unit turned on.

To turn on or off Daily Timer after its setting is done

1 **Press CLOCK/TIMER repeatedly until "DAILY" appears on the display.**

2 **To turn off the Daily Timer, press CANCEL.**
The DAILY (Daily Timer) indicator goes off from the display. "OFF" appears for a while. The Daily Timer is canceled, but the setting for the Daily Timer remains in memory.

To turn on the Daily Timer, press SET.
The DAILY (Daily Timer) indicator lights up on the display. The settings you have done are shown on the display in sequence for your confirmation.

If the unit is turned on when the timer-on time comes, Daily Timer does not work.

Using Recording Timer

With Recording Timer, you can make a tape of a radio broadcast automatically.

How Recording Timer actually works
The unit automatically turns on, tunes into the specified station, sets the volume level to "MIN," and starts recording when the on-time comes (the ⏲ indicator flashes just before the on-time, and continues flashing while the timer is operating). Then, when the off-time comes ("OFF" appears just before the off-time), the unit automatically turns off (stands by).
The timer setting remains in memory until you change it.
- There is a time limit in doing the following steps. If the setting is canceled before you finish, start from step 1 again.
- If you have made a mistake while setting the timer, press CANCEL. (However, this does not always work. If CANCEL does not work, press CLOCK/TIMER repeatedly and start from step 1 again.)

On the unit ONLY:

1 Put a recordable cassette into deck B.

2 Press CLOCK/TIMER until "REC" appears on the display.
The REC (Recording Timer) indicator also starts flashing on the display.

- Each time you press the button, the timer setting modes change as follows:

DAILY → ON TIME → REC → Canceled → Clock setting (See page 9) → ON TIME →

3 Press CLOCK/TIMER again.
"ON TIME" appears for 2 seconds, then the unit enters on-time setting mode.

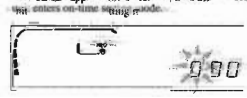

English

4 Set the on-time you want the unit to turn on.

1) Press ⏮ or ⏭ to set the hour, then press SET.
2) Press ⏮ or ⏭ to set the minute, then press SET.
"OFF TIME" appears for 2 seconds, then the unit enters off-time setting mode.

5 Set the off-time you want the unit to turn off (on standby).

1) Press ⏮ or ⏭ to set the hour, then press SET.
2) Press ⏮ or ⏭ to set the minute, then press SET.
The unit enters preset station selecting mode.

6 Select the preset station.

1) Press ⏮ or ⏭ to select the band ("TUNER FM" or "TUNER AM"), then press SET.
2) Press ⏮ or ⏭ to select a preset channel number, then press SET.
The REC (Recording Timer) indicator stops flashing and remains lit. The settings you have done are shown on the display in sequence.

7 Press ⏻/I to turn off the unit (on standby) if necessary.

If you want to listen to another source while recording
Press REC START/STOP to stop recording. Without stopping it, you cannot change the source.

To turn on or off Recording Timer after its setting is done

1 **Press CLOCK/TIMER repeatedly until "REC" appears on the display.**

2 **To turn off the Recording Timer, press CANCEL.**
The REC (Recording Timer) indicator goes off from the display.
The Recording Timer is canceled, but the setting for the Recording Timer remains in memory.

To turn on the Recording Timer, press SET.
The REC (Recording Timer) indicator lights up on the display. The settings you have done are shown on the display in sequence for your confirmation.

Using Sleep Timer

With Sleep Timer, you can fall asleep to music.
You can set Sleep Timer when the unit is turned on.

How Sleep Timer actually works

The unit automatically turns off after the specified time length passes.

On the remote control ONLY:

1 Press SLEEP.
The time length until the shut-off time appears and the SLEEP indicator starts flashing on the display.
- Each time you press the button, the time length changes as follows:

10 → 20 → 30 → 60 → 90 → 120 → Canceled

2 Wait for about 5 seconds after specifying the time length.
The SLEEP indicator stops flashing and remains lit.

To check the remaining time until the shut-off time, press SLEEP once so that the remaining time until the shut-off time appears for about 5 seconds.

To change the shut-off time, press SLEEP repeatedly until the desired time length appears on the display.

To cancel the setting, press SLEEP repeatedly so that the SLEEP indicator goes off.
- Sleep Timer is also canceled when you turn off the unit.

Timer Priority

Since each timer can be set separately, you may wonder what happens if the setting for these timers overlaps.
Here are examples.

- **Recording Timer has priority over Daily Timer and Sleep Timer.**
If Daily Timer is set to come on while Recording Timer is operating, Daily Timer will not come on at all.

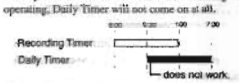

If Recording Timer is set to come on while Sleep Timer is operating, Sleep Timer will not work (the SLEEP indicator does not go off):

Maintenance

English

To get the best performance of the unit, keep your discs, tapes, and mechanism clean.

Handling discs

- Remove the disc from its case by holding it at the edge while pressing the center hole lightly.
- Do not touch the shiny surface of the disc, or bend the disc.
- Put the disc back in its case after use to prevent warping.

- Be careful not to scratch the surface of the disc when placing it back in its case.
- Avoid exposure to direct sunlight, temperature extremes, and moisture.

To clean the disc
Wipe the disc with a soft cloth in a straight line from center to edge.

DO NOT use any solvent — such as conventional record cleaner, spray, thinner, or benzine — to clean the disc.

Handling cassette tapes

- If the tape is loose in its cassette, take up the slack by inserting a pencil in one of the reels and rotating.
- If the tape is loose, it may get stretched out, or caught in the cassette.

- Be careful not to touch the tape surface.

- Avoid the following places to store the tape:
— In dusty places
— In direct sunlight or heat
— In moist areas
— Near a magnet

English

Troubleshooting

If you are having a problem with your unit, check this list for a possible solution before calling for service.
If you cannot solve the problem from the hints given here, or the unit has been physically damaged, call a qualified person, such as your dealer, for service.

Symptom	Cause	Action
No sound is heard.	Connections are incorrect or loose.	Check all connections and make connections. (See pages 6 to 8.)
Hard to listen to broadcasts because of noise.	• Antennas are disconnected. • The AM loop antenna is too close to the unit. • The FM antenna is not properly extended and positioned.	• Reconnect the antennas correctly and securely. • Change the position and direction of the AM loop antenna. • Extend the FM antenna at the best position.
The disc sound is discontinuous.	The disc is scratched or dirty.	Clean or replace the disc. (See page 24.)
The disc tray does not open or close.	• The AC power cord is not plugged in. • Trays are locked.	• Plug the AC power cord. • Unlock the trays. (See page 15.)
The disc does not play.	The disc is placed upside down.	Place the disc with the label side up.
The cassette holders cannot be opened.	Power supply from the AC power cord has been cut off while the tape was running.	Turn on the unit.
Impossible to record.	Small tabs on the back of the cassette are removed.	Cover the holes with adhesive tape.
Stereo effect is lost.	Vocal Masking is activated.	Cancel the Vocal Masking. (See page 20.)
Operations are disabled.	The built-in microprocessor may malfunction due to external electrical interference.	Unplug the AC power cord and then plug it back in.
Unable to operate the unit from the remote control.	• The path between the remote control and the remote sensor on the unit is blocked. • The batteries are exhausted.	• Remove the obstruction. • Replace the batteries.

Specifications

English

Amplifier section — CA-MXJ500

Output Power (IEC 268-3/DIN)
7.2 W per channel, min. RMS, both channels driven into 6 Ω at 1 kHz with no more than 0.9% total harmonic distortion.

Audio input sensitivity/impedance (at 1 kHz)
AUX: 420 mV/50 kΩ
MIC 1/2: 3.9 mV/3 kΩ

Speakers/impedance: 6 Ω – 16 Ω

Tuner

FM tuning range: 87.50 MHz – 108.00 MHz
AM tuning range:
For Saudi Arabia:
At 9 kHz intervals : 531 kHz – 1,602 kHz
At 10 kHz intervals : 530 kHz – 1,600 kHz
For other countries:
At 9 kHz intervals : 531 kHz – 1,710 kHz
At 10 kHz intervals : 530 kHz – 1,710 kHz

CD player

CD Capacity: 3 CDs
Dynamic range: 85 dB
Signal-to-noise ratio: 90 dB
Wow and flutter: Immeasurable

Cassette deck

Frequency response
Normal (type I): 50 Hz – 14,000 Hz
CrO2 (type II): 50 Hz – 14,000 Hz
Metal (type IV): 50 Hz – 14,000 Hz (only for playback)
Wow and flutter
0.15% (WRMS)

General

Power requirement: AC 110 V / AC 127 V / AC 220 V / AC 230 V – AC 240 V ∿ (adjustable with the voltage selector), 50 Hz/ 60 Hz
Power consumption: 95 W (in operation)
14 W (on standby)
Maximum power consumption (for Taiwan only): 360 W
Dimensions (approx.): 265 mm x 335 mm x 368 mm (W/H/D)
(10 7/8 in. x 13 1/4 in. x 14 7/8 in.)
Mass (approx.): 9.8 kg (21.6 lbs)

Supplied accessories

See page 6.

Speaker section — SP-MXJ550

Type: 3-way bass-reflex type
Speaker units: Woofer: 16 cm (6 5/8 in.) cone x1
Midrange: 5 cm (2 in.) cone x1
Tweeter: 2 cm (1 5/8 in.) dome x1
Power handling capacity: 120 W
Impedance: 6 Ω
Frequency range: 45 Hz – 25,000 Hz
Sound pressure level: 86 dB/W•m
Dimensions (approx.): 235 mm x 335 mm x 270 mm (W/H/D)
(9 1/8 in. x 13 3/8 in. x 10 7/8 in.)
Mass (approx.): 3.7 kg (8.2 lbs) each

Design and specifications are subject to change without notice.

-MEMO-

Disassembly method

<Main body>

■Removing the metal cover

(See Fig.1 to 3)

1. Remove the six screws **A** attaching the metal cover on the back of the body.

2. Remove the two screws **B** attaching the metal cover on both sides of the body.

3. Remove the metal cover from the body by lifting the rear part of the cover.

ATTENTION: Do not break the front panel tab fitted to the metal cover.

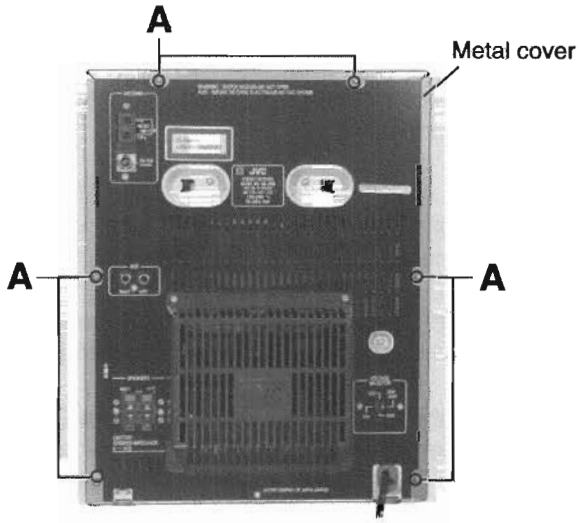

Fig.1

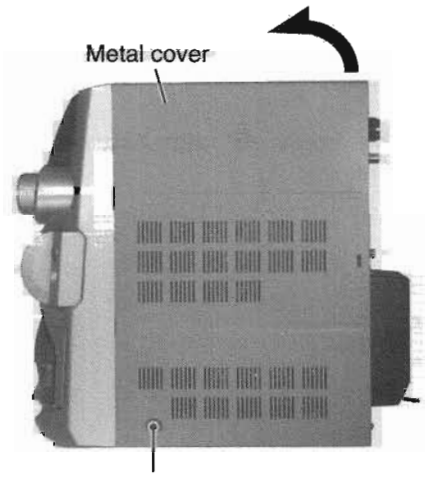

Fig.2

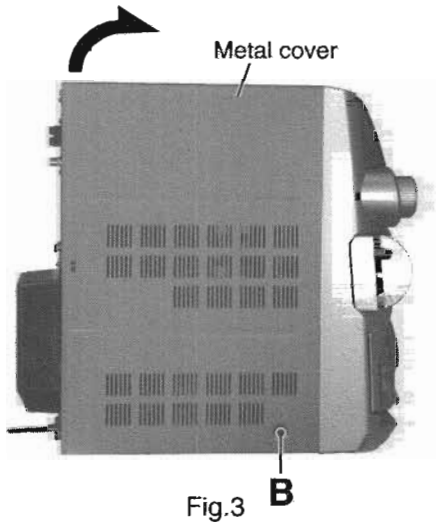

Fig.3

■Removing the CD changer mechanism assembly (See Fig.4 to 6)

- Prior to performing the following procedure, remove the metal cover.

1. For the card wire connecting the CD changer mechanism board and the main board, disconnect it from connector CN868 on the main board.
2. Remove the two screws **C** attaching the CD changer mechanism assembly on both sides of the body.
3. Remove the two screws **D** attaching the CD changer mechanism assembly to the rear panel. Remove the screw **E** attaching the AUX terminal on the back of the body.
4. Pull the top of rear panel and the front panel assembly outward respectively, then remove the CD changer mechanism assembly by lifting the rear part of the assembly.
5. Remove the screw **E'** attaching the Digital out terminal. (Only ver. A)

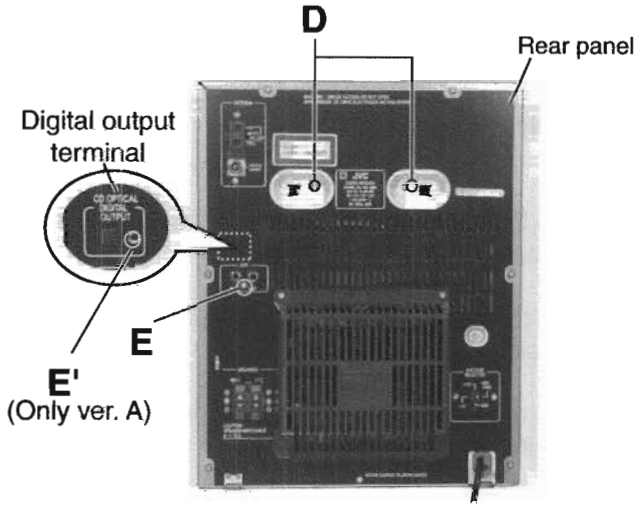

Fig.4

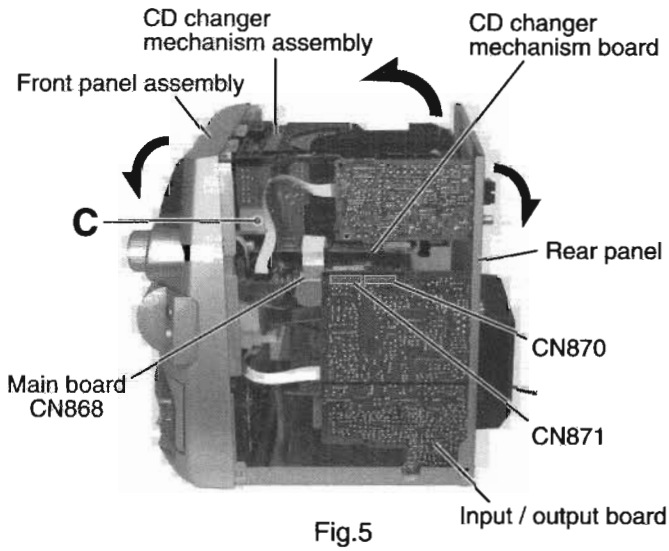

Fig.5

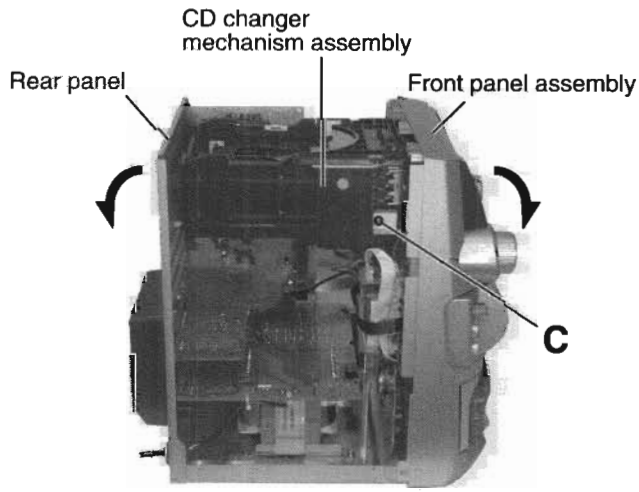

Fig.6

■ Removing the front panel assembly (See Fig.7 to 9)

- Prior to performing the following procedure, remove the metal cover and the CD changer mechanism assembly.

1. Disconnect the card wire from connector CN865 on the main board.
2. Disconnect the card wire from connector CN315 on the input / output board.
3. Disconnect the harness from connector CN912 on the input / output board.
4. Disconnect the harness from connector CN901 on the relay board on the back of the front panel assembly.
5. Disconnect connector CN870 and CN871 on the input/output board from the main board respectively.
6. Remove the four screws **F** attaching the front panel assembly on the bottom of the body.
7. Release the two joints **a** and **b** on the lower part of the sides using a screwdriver, and remove the front panel assembly toward the front.

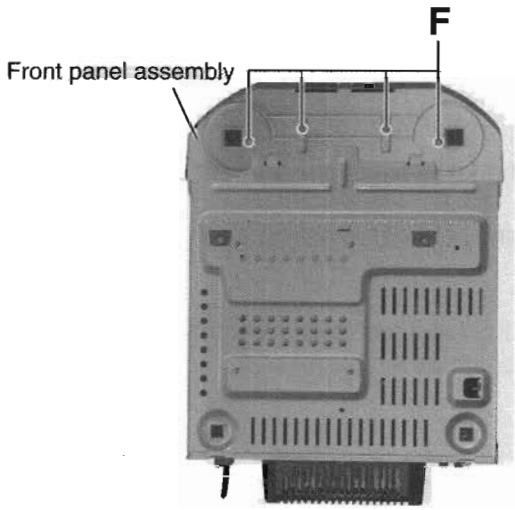

Fig.7

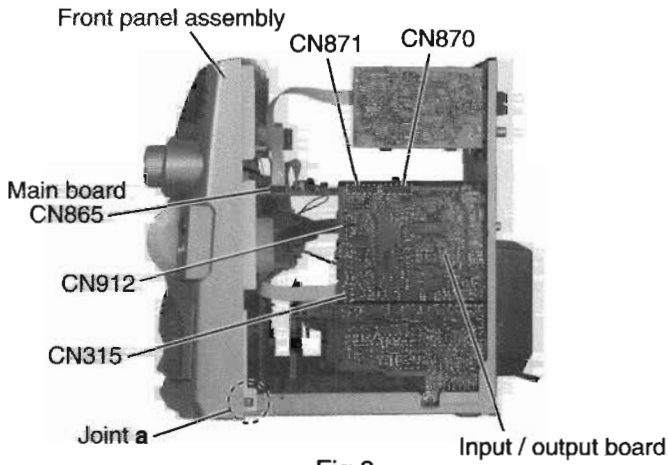

Fig.8

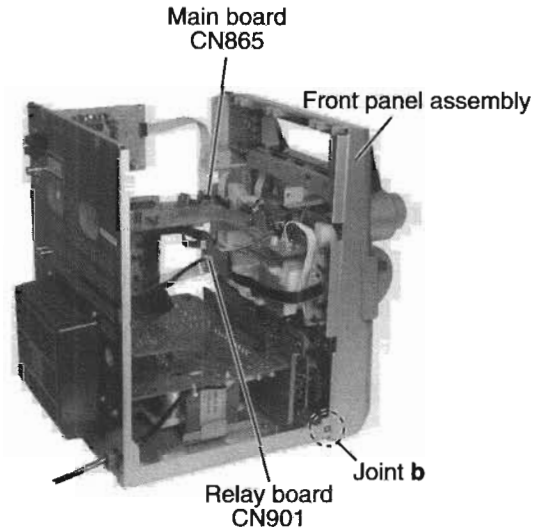

Fig.9

<Front panel assembly>

■ Removing the Microphone terminal board assembly (See Fig.10 and 11)

1. Pull out the MIC volume knob from the front side.
2. Remove the screw **H** attaching earth wire.
3. Remove the two screws **G** attaching the microphone terminal board assembly.

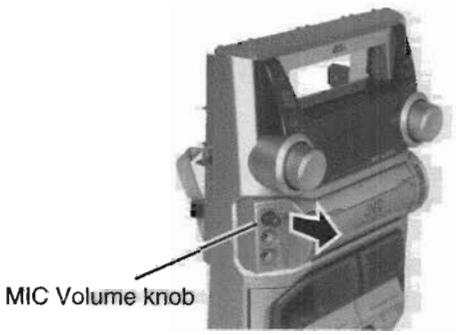

Fig.10

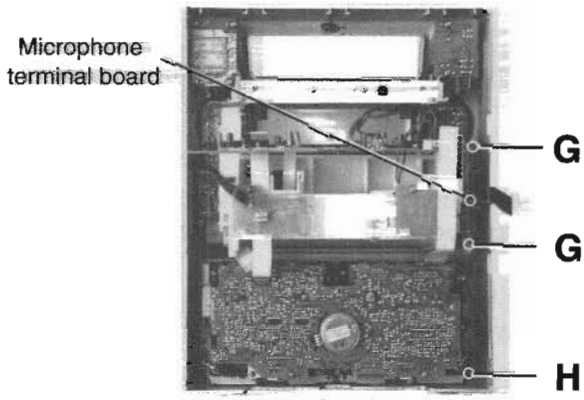

Fig.11

■ Removing the rolling panel assembly (See Fig.12 and 13)

1. Disconnect the harness from connector CN900 on the relay board on the back of the rolling panel assembly.
2. Disconnect the harness from connector CN862, CN863, CN850, CN851 and CN815 on the main board respectively. Disconnect the card wire from connector CN880 on the main board.
3. Disconnect the card wire from connector CN869 and the harness from CN883 and CN884 on the main board respectively.
4. Remove the four screws **I** attaching the rolling panel assembly.

   ATTENTION: For the harness which should be connected to connector CN869, CN883 and CN884 on the main board, get them through the slots under the rolling panel when reattaching the rolling panel assembly to the front panel (Refer to Fig.13)

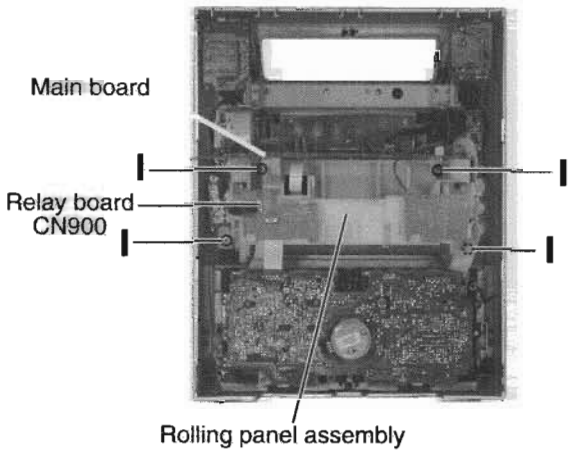

Fig.12

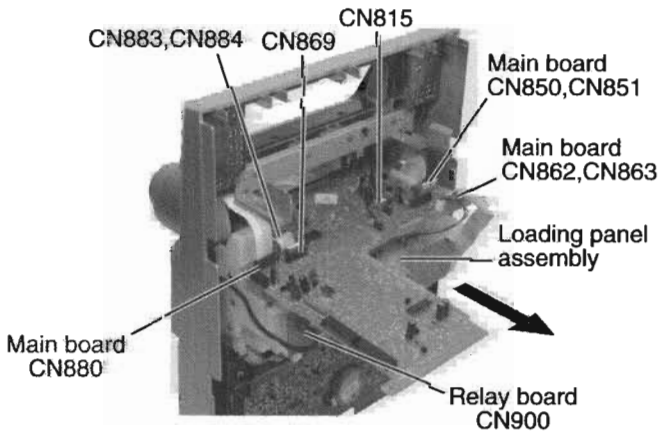

Fig.13

■Removing the main board (See Fig.14 and 15)

- Prior to performing the following procedure, remove the front panel assembly, the microphone terminal board and the rolling panel assembly.

1. Disconnect the harness from connector CN867 on the main board.
2. Disconnect the card wire from connector CN879 on the main board (Before pulling out the card wire, stand the part **c** of CN879 as shown in Fig.15).
3. Remove the two screws **J** attaching the main board.

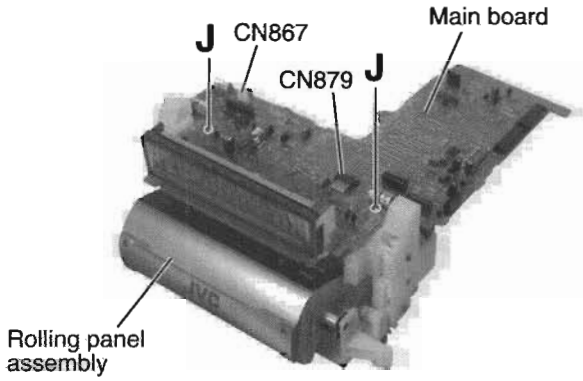

Fig.14

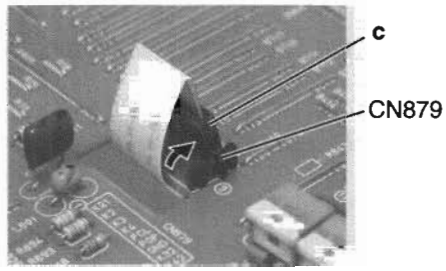

Fig.15

■Removing the cassette mechanism assembly (See Fig.16)

- Prior to performing the following procedure, remove the front panel assembly.

1. Disconnect the card wire from connector CN306 on the cassette mechanism board.
2. Remove the eight screws **K** and **K'** attaching the cassette mechanism assembly.

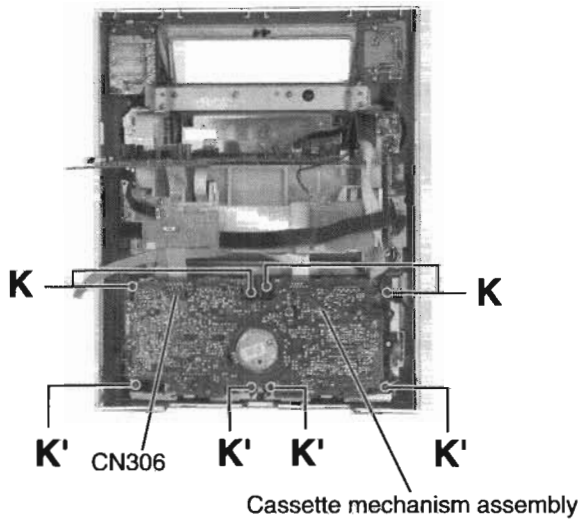

Fig.16

■Removing the boards in the front panel assembly (See Fig.17 to 18)

- Prior to performing the following procedure, remove the front panel assembly and the rolling panel assembly.

— Function board1 (See Fig.17) —

1. Remove the two screws **L** attaching the function board 1.

— Function board2 (See Fig.17) —

1. Remove the two screws **M** attaching the function board 2.

— Bass-level regulator board (See Fig.18) —

1. Pull out the level knob on the front side of the front panel assembly and remove the nut attaching the bass-level regulator board.

2. Release the two joints **d**. Unsolder FW951 on the bass-level regulator board and disconnect the harness connected to the power switch.

— Main volume & headphone board (See Fig.18) —

1. Pull out the volume knob on the front side of the front panel assembly and remove the nut attaching the main volume & headphone board.

2. Remove the two screws **N** attaching the main volume & headphone board on the back of the front panel assembly and release the two joints **e**.

3. Unsolder FW850 on the main volume & headphone board and disconnect the harness connected to the eject switch board.

4. Remove the screw **K'** attaching the earth terminal extending from the main volume & headphone board.

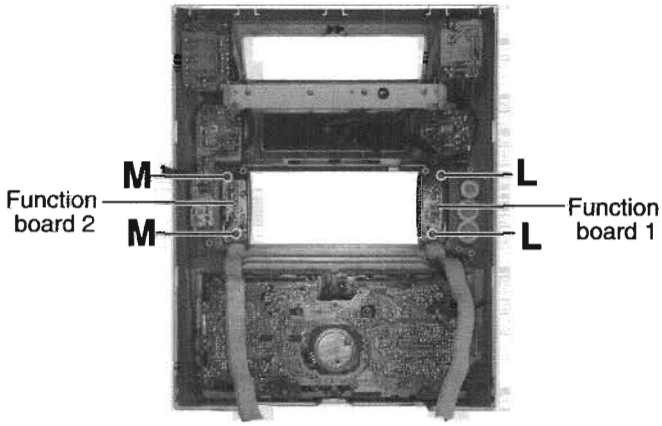

Fig.17

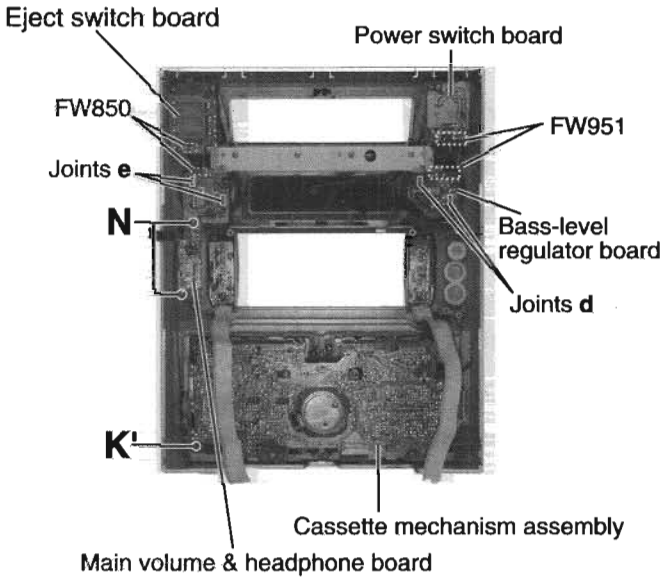

Fig.18

— Power switch board (See Fig.19) —

1. Remove the two screws **O** attaching the power switch board. Unsolder FW951 on the power switch board and disconnect the harness extending to the bass-level regulator board.

— Eject switch board (See Fig.19) —

1. Remove the four screws **P** attaching the eject switch board. Unsolder FW850 on the eject switch board and disconnect the harness extending to the main volume & headphone board.

— Remote control port board (See Fig.19) —

1. Remove the screw **Q** attaching the remote control port board.

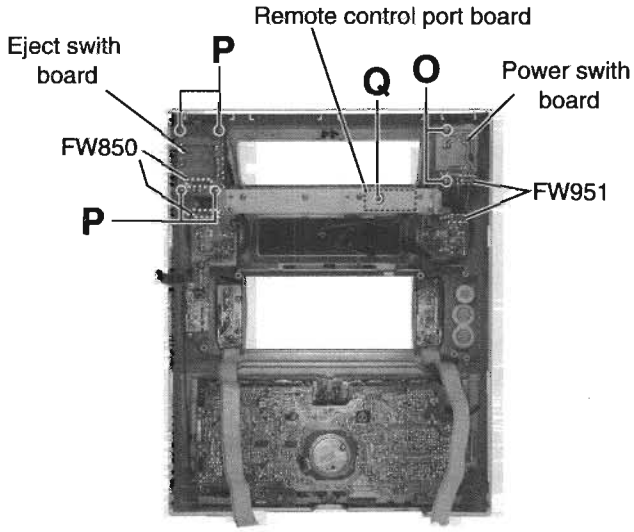

Fig.19

■ Removing the relay board and fixing board (See Fig.20)

- Prior to performing the following procedure, remove the metal cover.

※There is no need to remove the front panel assembly.

1. Disconnect the harness from connector CN900 and CN901 on the relay board on the back of the loading panel assembly.

2. Remove the screw **R** attaching the relay board. Release the tab **f** and remove the relay board from the groove **g**.

3. Remove the screw **R'** attaching the fixing board and remove the fixing board from the groove **h**.

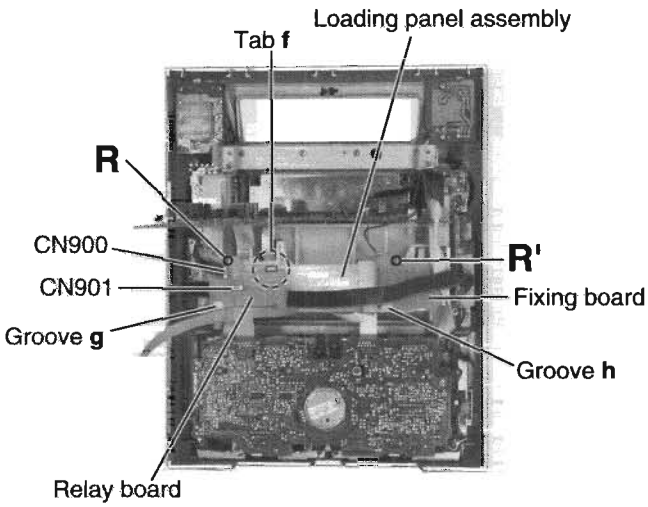

Fig.20

<Rear panel assembly>

■Removing the tuner board (See Fig.21 and 22)

- Prior to performing the following procedure, remove the metal cover.

1. Remove the two plastic rivets attaching the joint board, and remove the joint board.
2. Disconnect the card wire from connector CN1 on the tuner board.
3. Remove the two screws **S** attaching the tuner board on the back of the body.

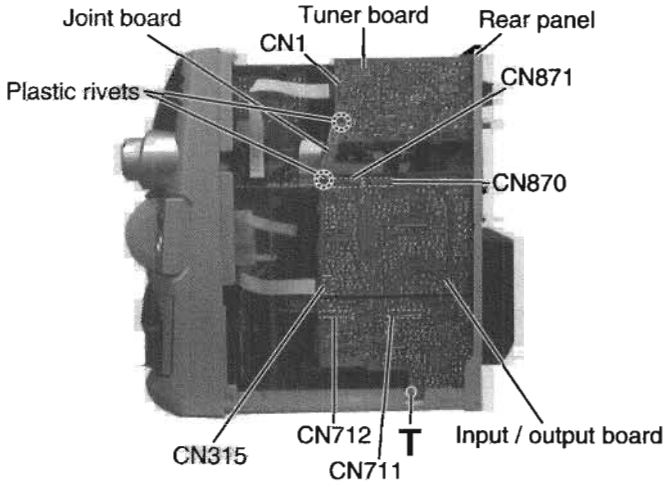

Fig.21

■Removing the input / output board (See Fig.21 and 22)

- Prior to performing the following procedure, remove the metal cover.

1. Remove the two plastic rivets attaching the joint board, and remove the joint board.
2. Disconnect the card wire from connector CN315 on the input / output board.
3. Remove the screw **T** attaching the input / output board on the lower right side of the body.
4. Remove the screw **E** attaching the AUX terminal board on the back of the body.
5. Remove the screw **E'** attaching the digital out put terminal. (Only Ver. A)
6. Disconnect connector CN870, CN871, CN711 and CN712 on the input / output board by pulling out them outward. Remove the input / output board from the body.

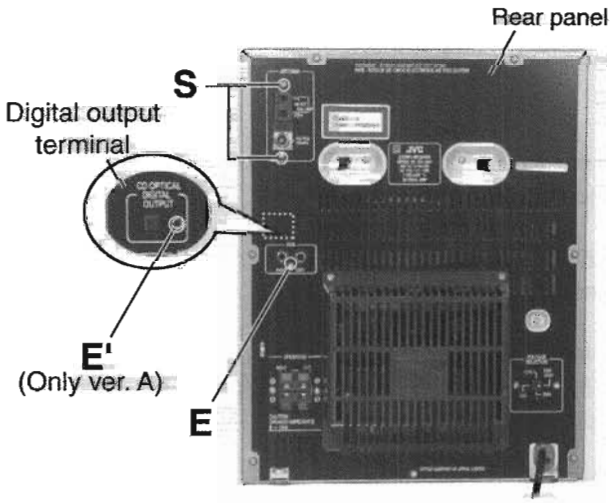

Fig.22

■Removing the rear cover / rear panel (See Fig.23 to 26)

- Prior to performing the following procedure, remove the metal cover and the CD changer mechanism assembly.

※There is no need to remove the front panel assembly.

1. Remove the two screws **U** attaching the rear cover on the back of the body.
2. Remove the screw **E** attaching the AUX terminal board and the rear panel on the back of the body.
3. Remove the screw **E'** attaching the digital output terminal. (Only Ver. A)
4. Remove the seven screws **V** attaching the heat sink and the preamplifier board to the rear panel on the back of the body.
5. Remove the two screws **W** attaching the voltage selector on the back at the body.
6. Remove the screw **X** attaching the rear panel to the base chassis on the back of the body.
7. Release the two joints **i** and **j** on the rear panel bottom using a screwdriver, and detach the rear panel backward.
8. Remove the tuner board in case of necessity (Refer to Fig.21 and 22).

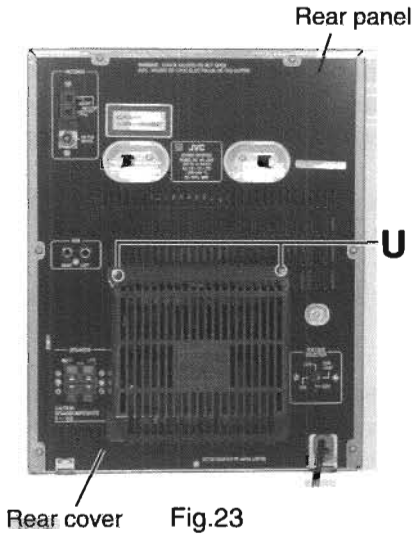

Fig.23

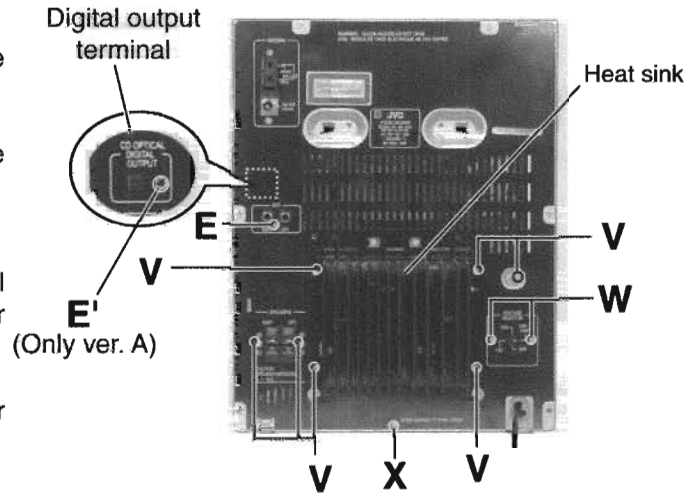

Fig.24

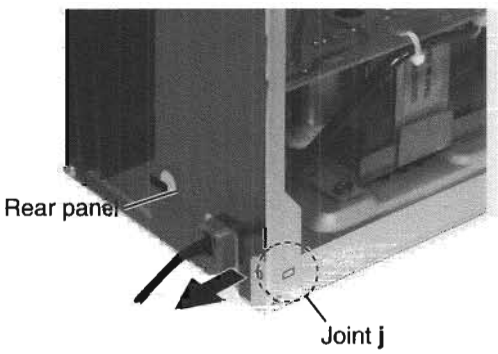

Fig.26

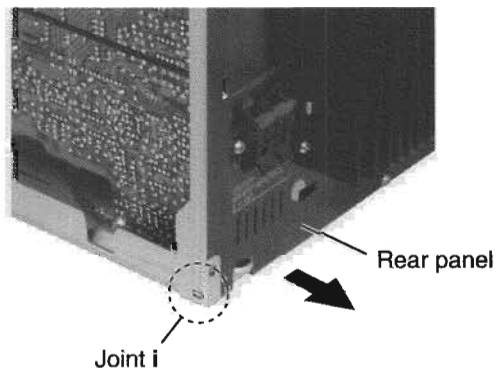

Fig.25

■Removing the pre-amplifier board / heat sink (See Fig.27 to 29)

- Prior to performing the following procedure, remove the metal cover, the CD changer mechanism assembly and the rear cover / rear panel.

※There is no need to remove the front panel assembly.

1. Remove the input / output board (Refer to Fig.21 and 22).
2. Disconnect the harness from connector CN901 on the relay board on the back of the rolling panel assembly.
3. Disconnect the harness from connector CN713 on the pre-amplifier board.
4. Remove the two screws **Y** attaching the heat sink to the power & main amplifier board on the back of the body.
5. Remove the two screws **Z** attaching the amplifier board to the heat sink and detach them with the heat sink bracket.

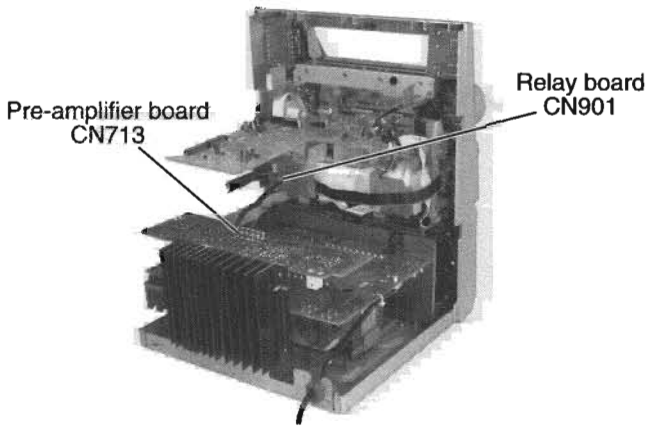

Fig.27

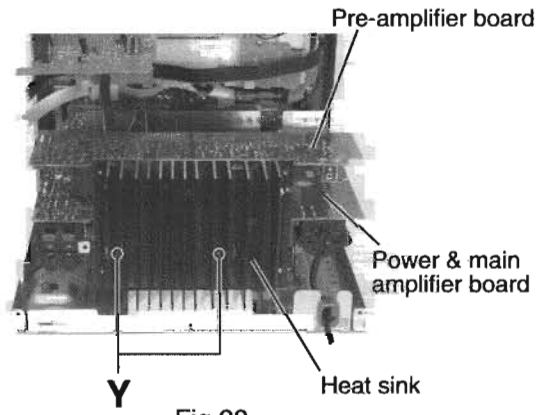

Fig.28

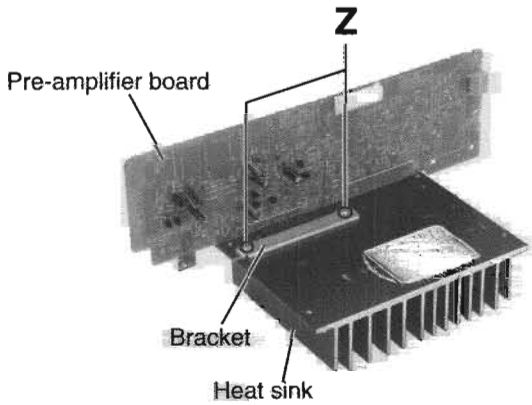

Fig.29

■Removing the power & main amplifier board (See Fig.30 and 31)

- Prior to performing the following procedure, remove the metal cover, the CD changer mechanism assembly, the rear cover / rear panel, the input & output board / pre-amplifier board.

1. Remove the four screws **A** attaching the transf. on the power & main amplifier board through the upper side slots.
2. Remove the two plastic rivets fixing the power & main amplifier board.
3. Remove the cord stopper by pushing it upward.
4. Cut off the bands **k** and **l** fixing the power cord and unsolder the soldered part on the power & main amplifier board.

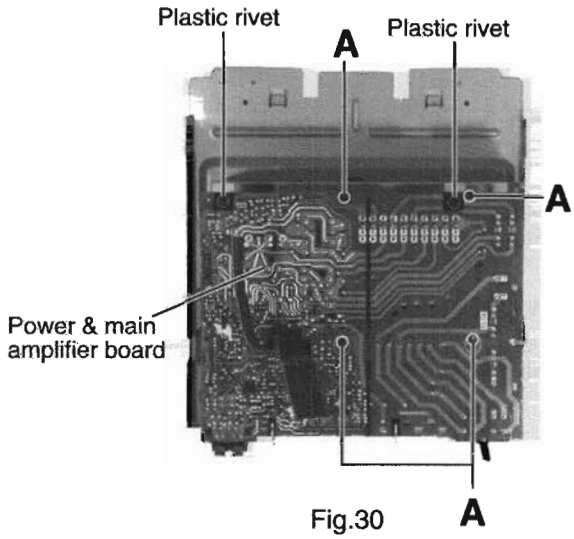

Fig.30

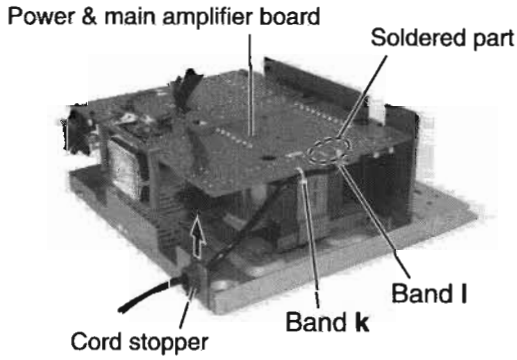

Fig.31

<Loading panel assembly>

■Removing the multi-control assembly (See Fig.32 to 34)

- Prior to performing the following procedure, remove the loading panel assembly.

1. Remove the two screws **B** attaching the multi-control assembly on both sides.
2. Remove the multi-control assembly outward while pushing the right and left hooks fixing multi-control assembly outward.

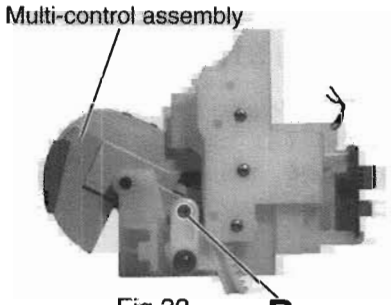

Fig.32

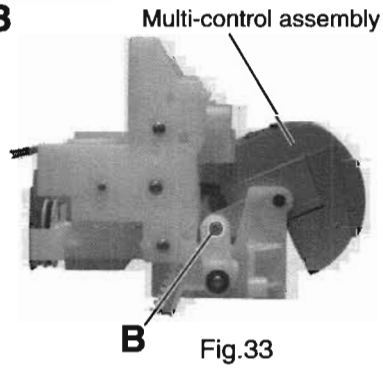

Fig.33

■Removing the multi-control board (See Fig.35 to 37)

- Prior to performing the following procedure, remove the loading panel assembly and the multi-control assembly.

1. Remove the four screws **C** attaching the cover and the bracket.
2. Pull out the right and left panel holders outward by releasing the tabs **m** outward.
3. Remove the cover and the bracket.
4. Remove the four screws **D** attaching the multi-control board.

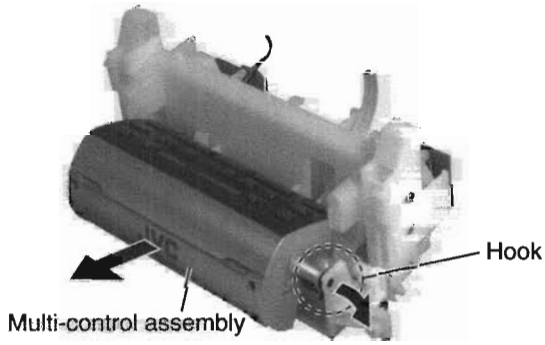

Fig.34

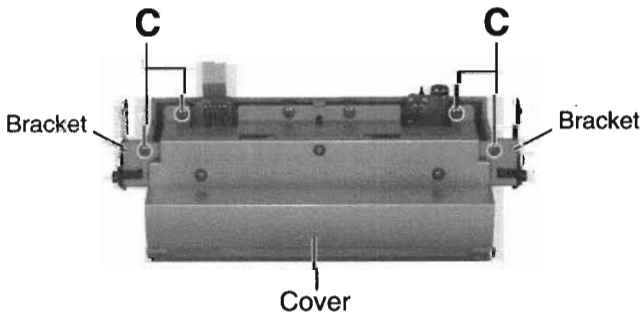

Fig.35

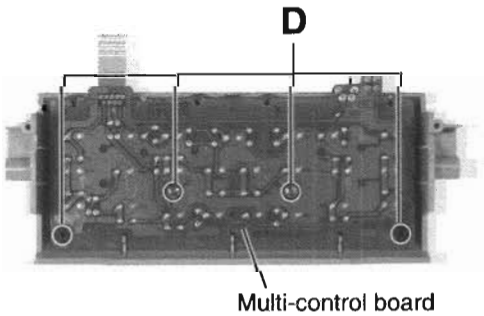

Fig.37

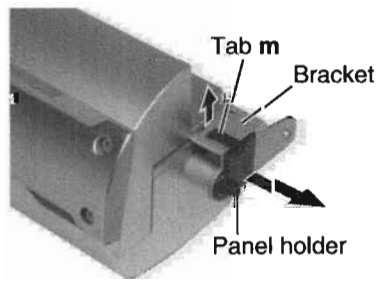

Fig.36

■ Removing the drive motor assembly (See Fig.38 to 40)

- Prior to performing the following procedure, remove the loading panel assembly and the multicontrol assembly.

1. Remove the relay board / fixing board (Refer to Fig.20).
2. Remove the two screws **E** attaching the motor bracket and remove the motor lead staple **n**.
3. Remove the two screws **F** attaching the shaft bracket.
4. Remove the motor belt.
5. Remove the shaft assembly upward while pulling the keep plates **o** on both sides of the shaft assembly outward.
6. Remove the drive motor upward.

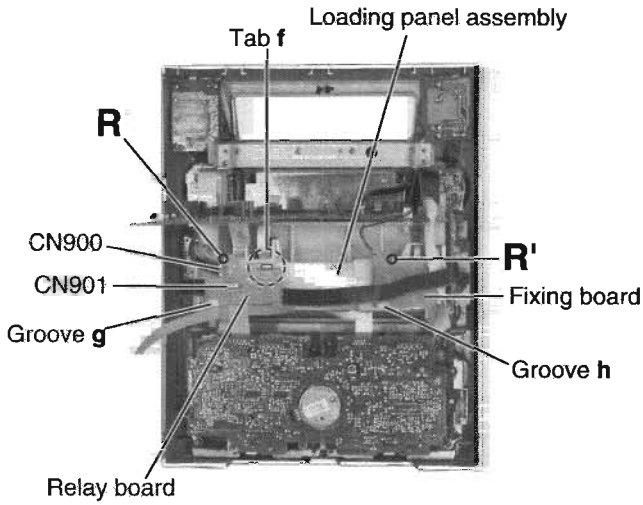

Fig.20

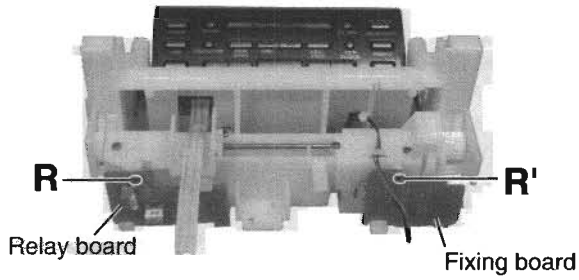

Fig.38

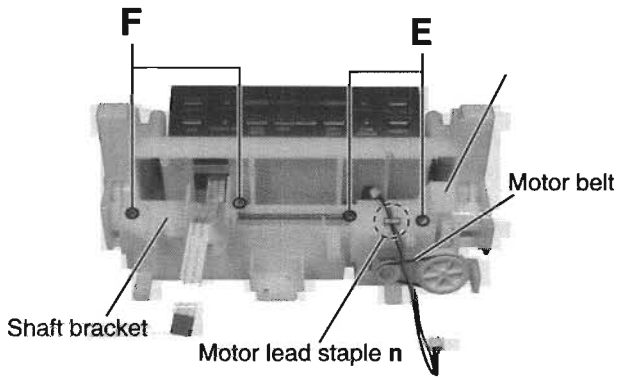

Fig.39

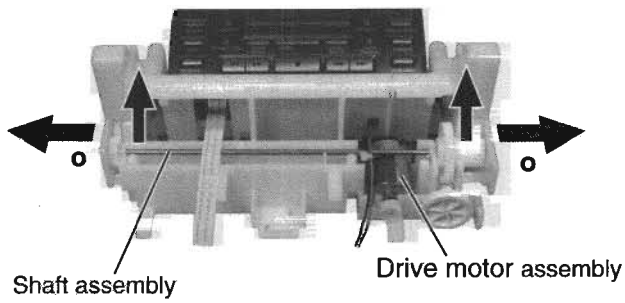

Fig.40

≪CD Changer Mechanism Type:VC3 Section≫

■ Removing the CD Servo control board (See Fig.1)

1.Remove the metal cover.
2.Remove the CD changer mechanism assembly.
3.From bottom side the CD changer mechanism assembly, remove the two screws **A** retaining the CD servo control board.
4.Absorb the four soldered positions "a" of the right and left motors with a soldering absorber.
5.Pull out the earth wire on the CD changer mechanism assembly.
6.The two screws **B** is removed and C.B.holder is detached.
7.Disconnect the connector CN854 on the CD servo control board.
8.Disconnect the card wire CN601 and the connector CN801 on the CD servo control board.

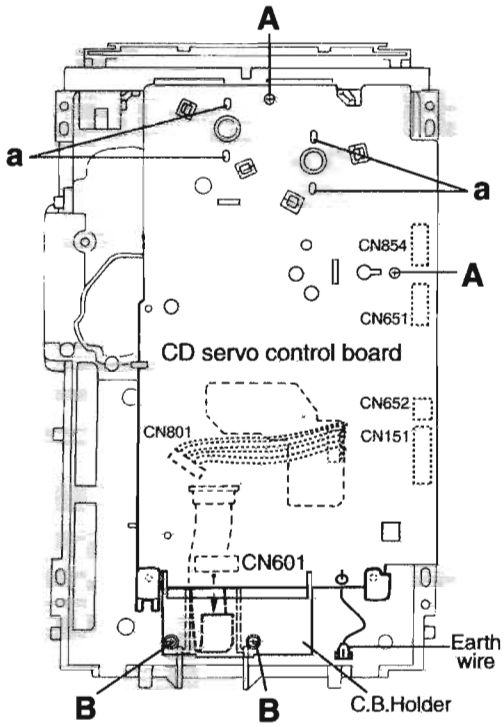

Fig.1

■ Removing the CD tray assembly (See Fig.2~4)

1. Remove the front panel assembly.
2. Remove the CD changer mechanism assembly.
3. Remove the CD Servo control board.
4. Remove the screw **C'** retaining the lod stopper.
5. From the T.bracket section "b" and clamper base section "c" , remove both of the edges fixing the rod(See Fig.2 and 3).
6. Remove the screw **D** retaining the disc stopper (See Fig.3).
7. Remove the three screws **E** retaining the T.bracket (See Fig.3).
8. Remove the screw **F** retaining the clamper assembly (See Fig.3).
9. From the left side face of the chassis assembly, remove the one screw **G** retaining both of the return spring and lock lever(See Fig. 4).
10. By removing the pawl at the section "d" fixing the return spring, dismount the return spring(See Fig.4).
11. Remove the three lock levers(See Fig.4).

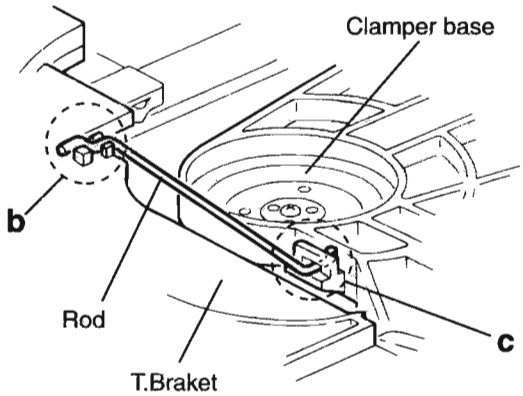

Fig.2

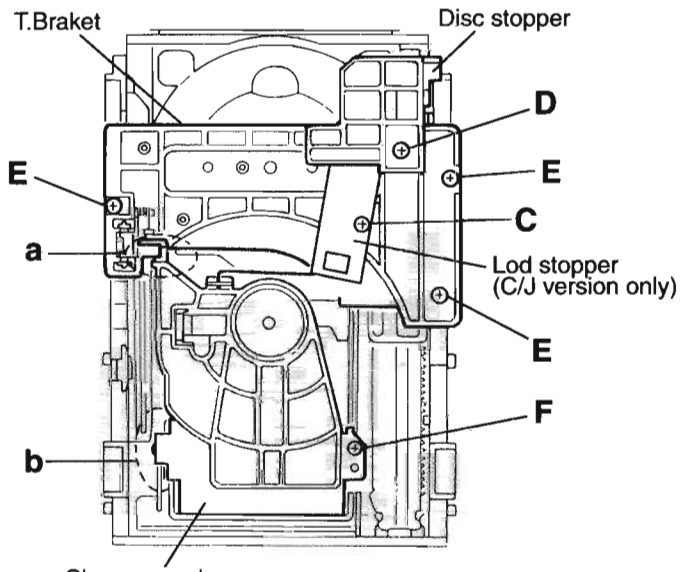

Fig.3

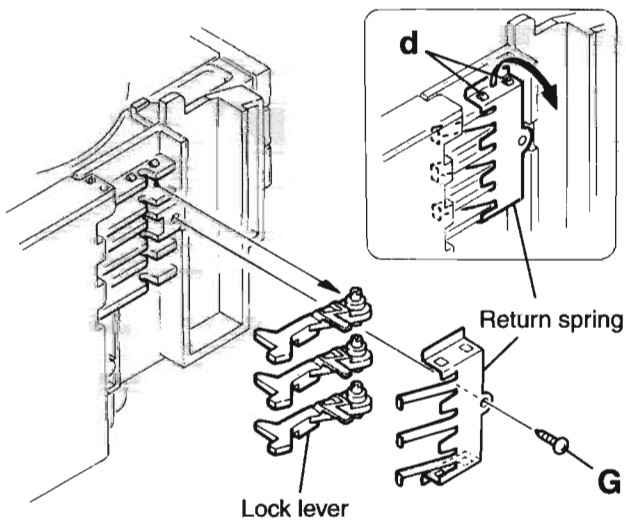

Fig.4

11. Check whether the lifter unit stopper has been caught into the hole at the section "e" of CD tray assembly as shown in Fig.5.
12. Make sure that the driver unit elevator is positioned as shown in Fig.6 from to the second or fifth hole on the left side face of the CD changer mechanism assembly.

[Caution] In case the driver unit elevator is not at above position, set the elevator to the position as shown in Fig.7 by manually turning the pulley gear as shown in Fig.8.

13. Manually turn the motor pulley in the clockwise direction until the lifter unit stopper is lowered from the section "e" of CD tray assembly(See Fig.8).
14. Pull out all of the three stages of CD tray assembly in the arrow direction "f" until these stages stop (See Fig.6).
15. At the position where the CD tray assembly has stopped, pull out the CD tray assembly while pressing the two pawls "g and g' " on the back side of CD tray assembly(See Fig.9). In this case, it is easy to pull out the assembly when it is pulled out first from the stage CD tray assembly.

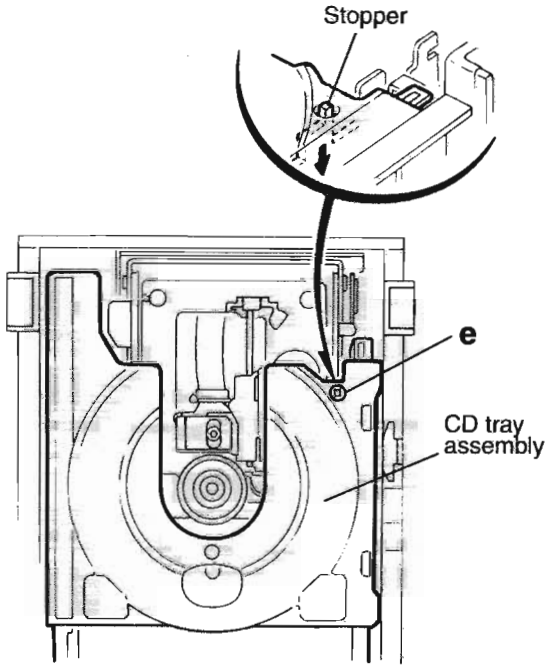

Fig.5

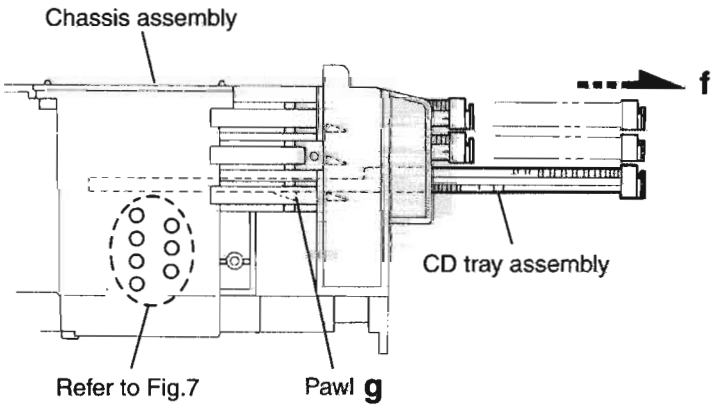

Fig.6

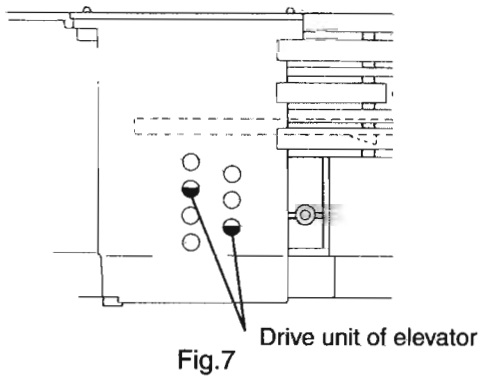

Fig.7

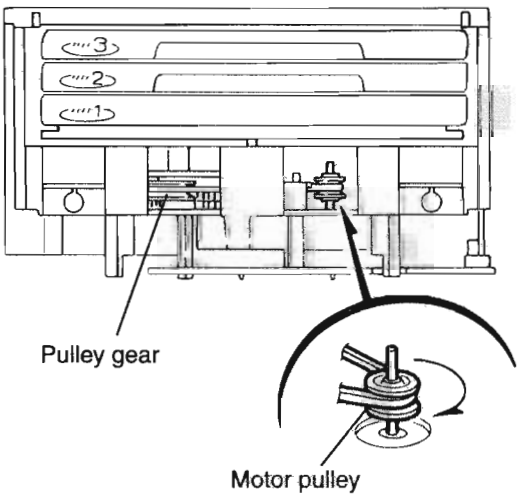

Fig.8

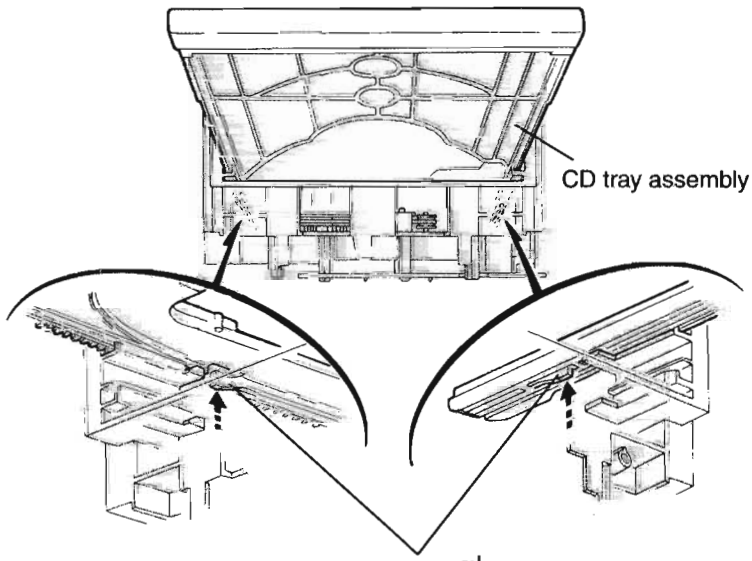

Fig.9

■ Removing the CD loading mechanism assembly(See Fig.10)

1. While turning the cams R1 and R2 assembly in the arrow direction "h" ,align the shaft "i" of the CD loading mechanism assembly to the position shown in Fig.10.
2. Remove the four screws **H** retaining the CD loading mechanism assembly.

■ Removing the CD traverse mechanism (See Fig.11 and 12)

1. For dismounting only the CD traverse mechanism without removing the CD loading mechanism assembly, align the shaft "j" of the CD loading mechanism assembly to the position shown Fig.11 while turning the cam R1 and R2 assembly in the arrow direction "k".
2. By raising the CD loading mechanism assembly in the arrow direction "l", remove the assembly from the lifter unit

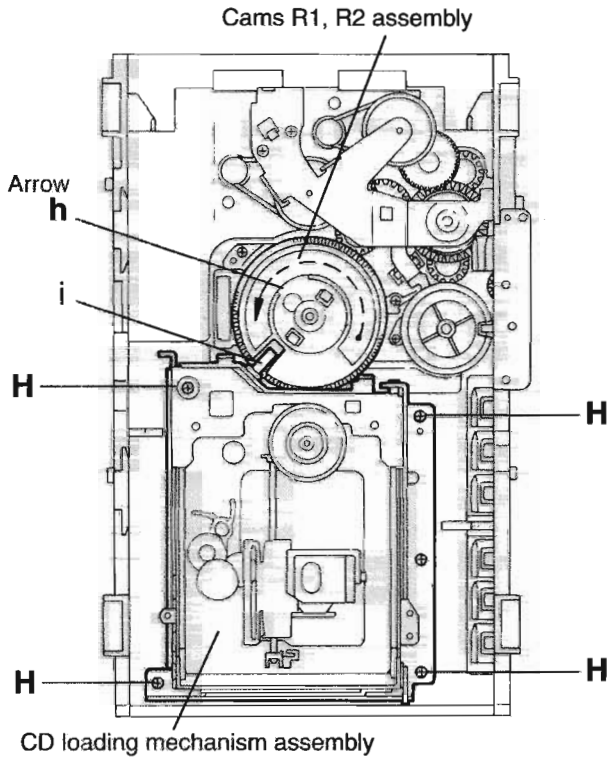

Fig.10

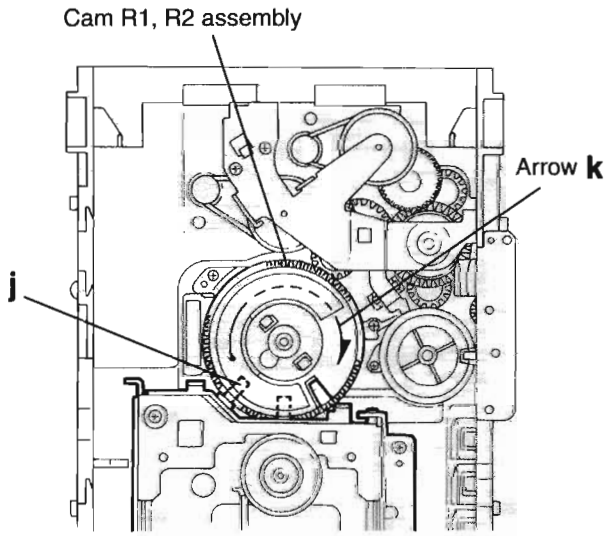

Fig.11

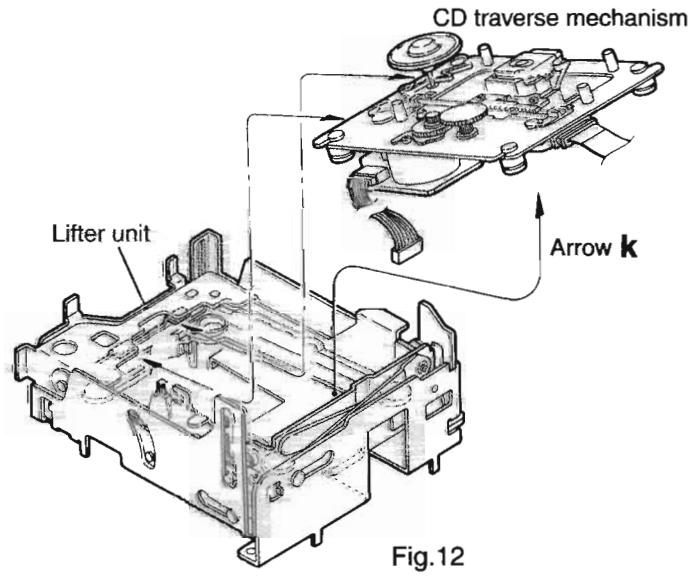

Fig.12

■ Removing the CD pick unit (See Fig.13)

1. Move the cam gear in the arrow direction "m" . Then, the CD pickup unit will be moved in the arrow direction "n" .
2. According to the above step, shift the CD pickup unit to the center position.
3. While pressing the stopper retaining the shaft in the arrow direction "o" , pull out the shaft in the arrow direction "p".
4. After dismounting the shaft from the CD pickup unit, remove the CD pickup unit

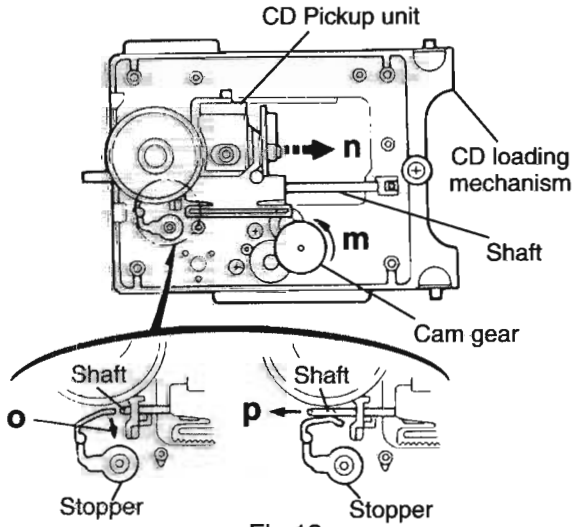

Fig.13

■ Removing the cam unit (See Fig.14 ~17)

1. Remove the CD loading mechanism assembly.
2. While turning the cam gear "q", align the pawl "r" position of the drive unit to the notch position(Fig.16) on the cam gear "q".
3. Pull out the drive unit and cylinder gear(See Fig.17).
4. While turning the cam gear "q", align the pawl "s" position of the select lever to the notch position(Fig.18) on the cam gear "q".
5. Remove the four screws **J** retaining the cam unit(cam gear "q" and cams R1/R2 assembly)(See Fig.18).

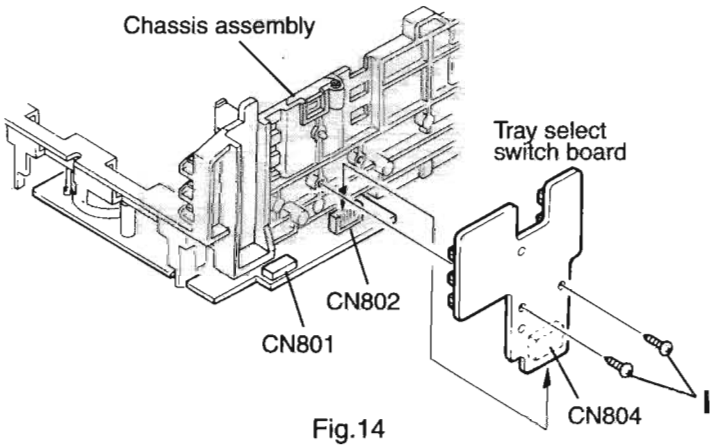

Fig.14

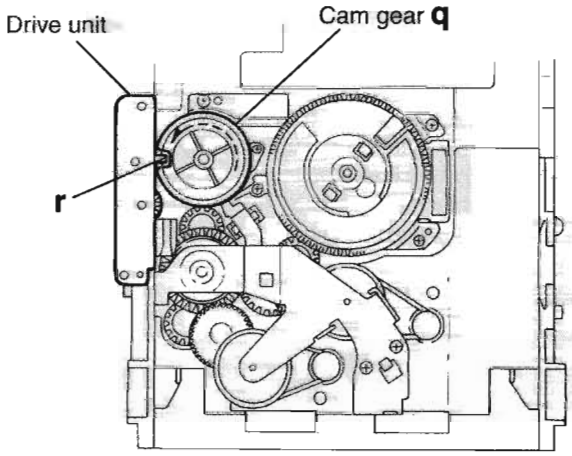

Fig.15

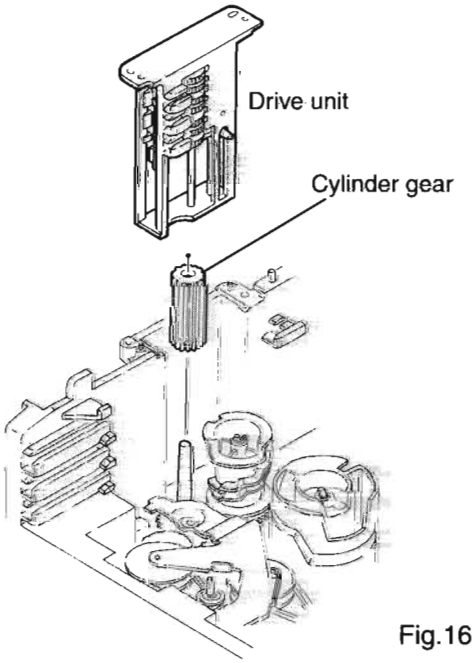

Fig.16

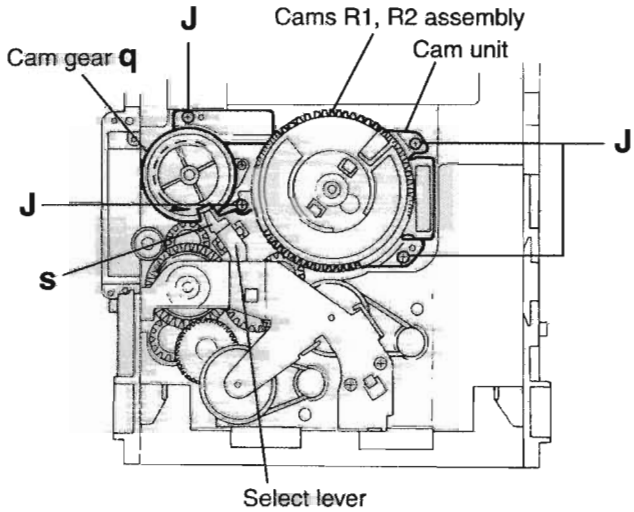

Fig.17

■ Removing the actuator motor and belt (See Fig.18~21)

1. Remove the two screws **K** retaining the gear bracket (See Fig.19).
2. While pressing the pawl "t" fixing the gear bracket in the arrow direction, remove the gear bracket (See Fig.19).
3. From the notch "u section" on the chassis assembly fixing the edge of gear bracket, remove and take out the gear bracket(See Fig. 20).
4. Remove the belts respectively from the right and left actuator motor pulleys and pulley gears(See Fig. 19).
5. After turning over the chassis assembly, remove the actuator motor while spreading the four pawls "v" fixing the right and left actuator motors in the arrow direction(See Fig. 21).

[Note] When the chassis assembly is turned over under the conditions wherein the gear bracket and belt have been removed, then the pulley gear as well as the gear, etc. constituting the gear unit can possibly be separated to pieces. In such a case, assemble these parts by referring to the assembly and configuration diagram in Fig. 22.

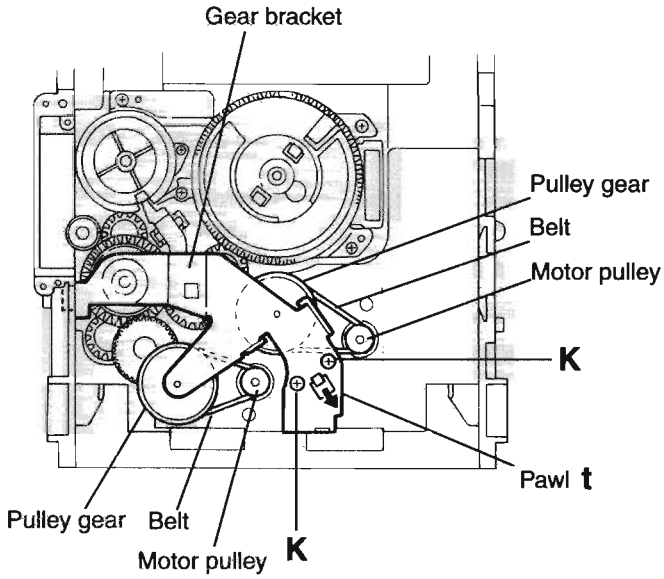

Fig.18

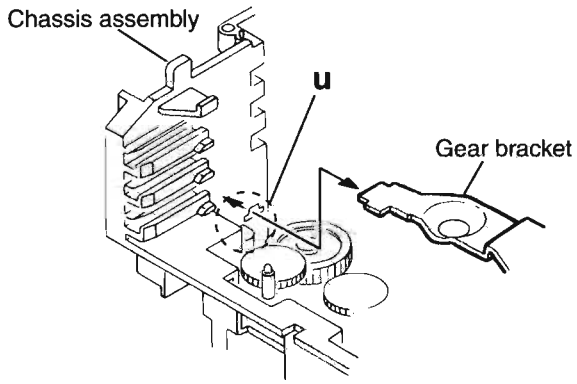

Fig.19

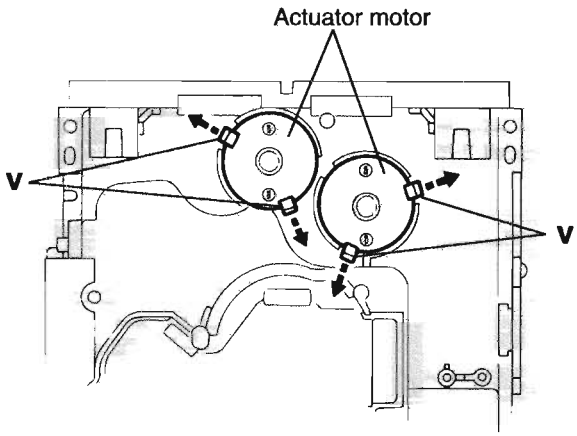

Fig.20

Assembly and Configuration Diagram

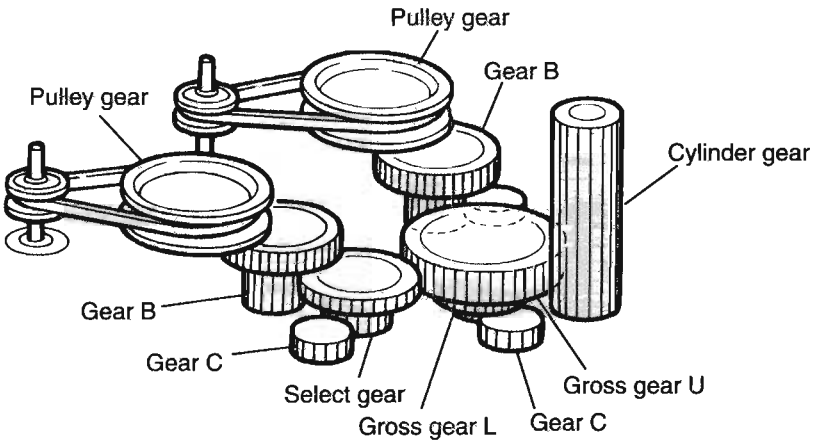

Fig.21

■ Removing the cams R1/R2 assembly and cam gear q(See Fig.22)

1. Remove the slit washer fixing the cams R1 and R2 assembly.
2. By removing the two pawls "w" fixing the cam R1, separate R2 from R1.
3. Remove the slit washer fixing the cam gear "q".
4. Pull out the cam gear "q" from the C.G. base assembly.

■ Removing the C.G. base assembly (See Fig.22 and 23)

Remove the three screws **L** retaining the C.G. base assembly.

[Caution] To reassemble the cylinder gear, etc.with the cam unit (cam gear and cans R1/R2 assembly), gear unit and drive unit, align the position of the pawl "x" on the drive unit to that of the notch on the cam gear "q". Then, make sure that the gear unit is engaged by turning the cam gear "q" (See Fig. 24).

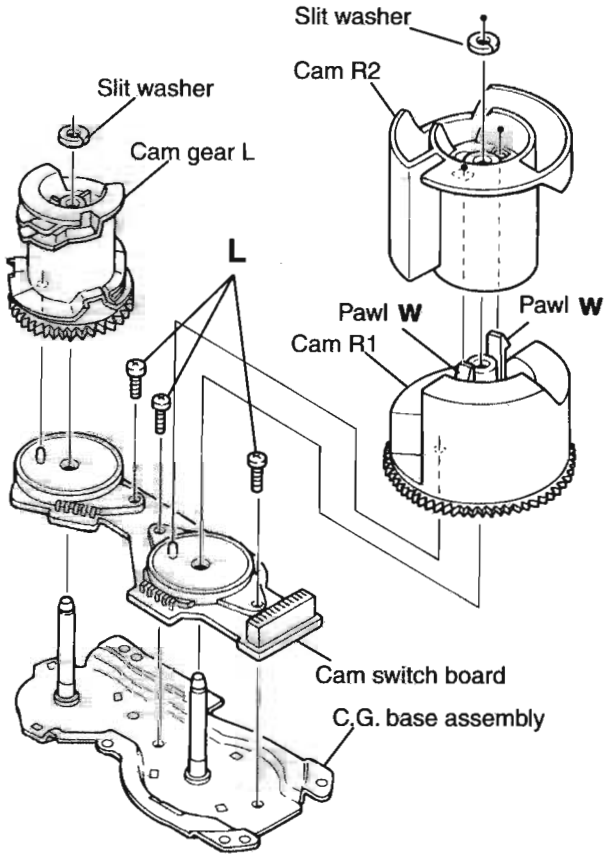

Fig.22

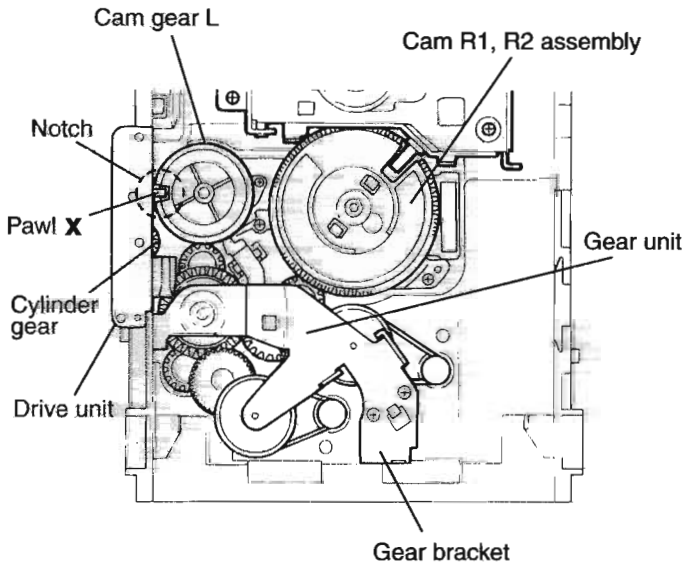

Fig.23

< Cassette mechanism section >

■ Removing the playback,recording and eraser heads (See Fig.1~3)

1. While shifting the trigger arms seen on the right side of the head mount in the arrow direction,turn the flywheel R in counterclockwise direction until the head mount has gone out with a click (See Fig. 1).
2. When the flywheel R is rotated in counterclockwise direction, the playback head will be turned in counterclockwise direction from the position in Fig.2 to that in Fig.3.
3. At this position, disconnect the flexible P.C.board (outgoing from the playback head) from the connector CN301 on the head amp. and mechanism control P.C. board.
4. After dismounting the FPC holder,remove the flexible P.C.board.
5. Remove the flexible P.C.board from the chassis base.
6. Remove the spring "a" from behind the playback head.
7. Loosen the reversing azimuth screw retaining the playback head.
8. Take out the playback head from the front of the head mount.
9. The recording and eraser heads should also be removed similarly according to Steps 1~8 above.

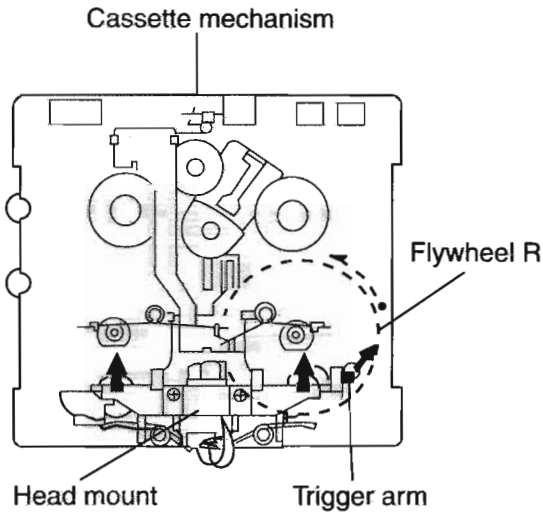

Fig.1 (Mechanism A side)

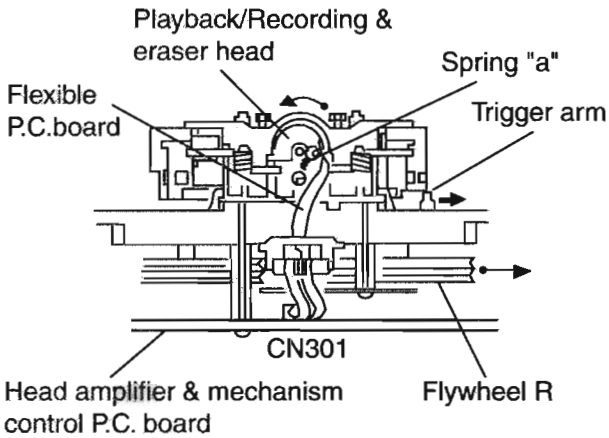

Fig.2 (Mechanism A side)

● Reassembling the playback, recording and eraser heads (See Fig.2,3)

1. Reassemble the playback head from the front of the head mount to the position as shown in Fig.3.
2. Fix the reversing azimuth screw.
3. Set the spring a from behind the playback head.
4. Attach the flexible P.C.board to the chassis base, and fix it with the FPC holder as shown in Fig.3.
5. The recording and eraser heads should also be reassembled similarly according to Steps 1~4 above.

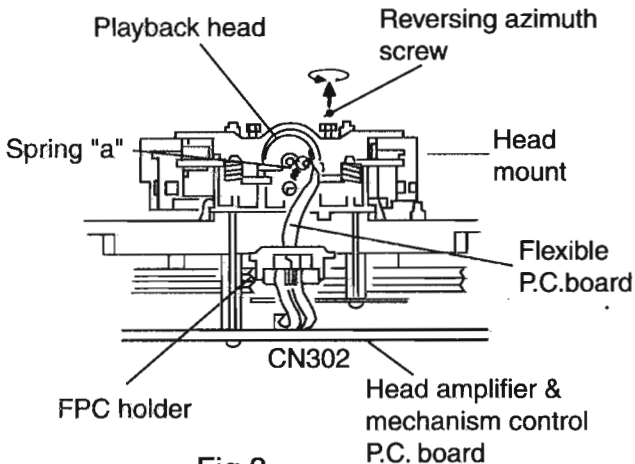

Fig.3 (Mechanism B side)

■ Removing the head amp.and mechanism control P.C.board (See Fig. 4)

1. Remove the cassette mechanism assembly.
2. After turning over the cassette mechanism assembly,remove the five screws "A" retaining the head amp. and mechanism control P.C. board
3. Disconnect the connectors CN303 and CN304 on the P.C.Board and the connectors CN1 on both the right and left side reel pulse P.C.Boards.
4. When necessary, remove the 4pin parallel wire soldered to the main motor

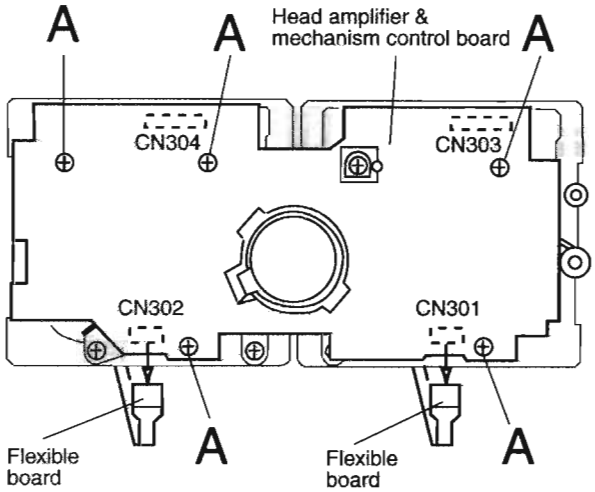

Fig.4

■ Removing the capstan motor assembly

1. Remove the six screws "B" retaining capstan motor assembly (See Fig. 5).
2. While raising the capstan motor, remove the capstan belts A and B respectively from the motor pulley (See Fig. 6).

Caution 1: Be sure to handle the capstan belts so carefully that these belts will not be stained by grease and other foreign matter. Moreover, these belts should be hand while referring to the capstan belt hanging method.

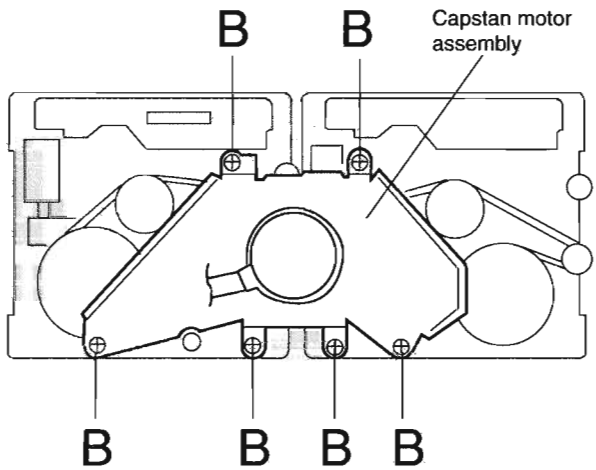

Fig.5

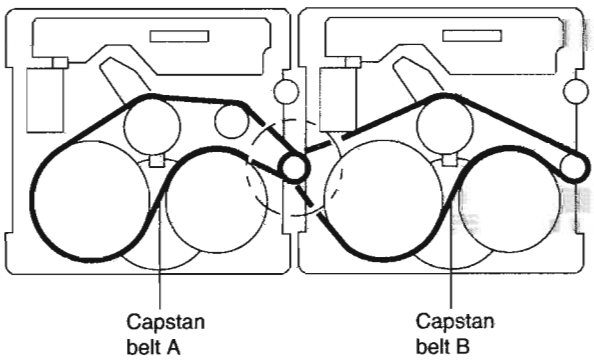

Fig.7

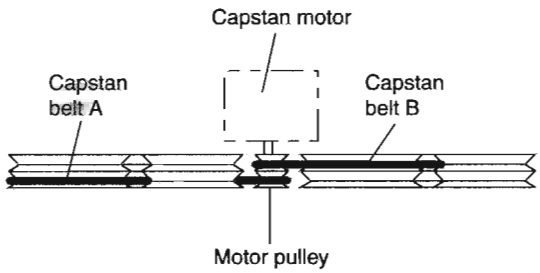

Fig.6

■ Removing the capstan motor (See Fig. 8)

From the joint bracket, remove the two screws "C" retaining the capstan motor.

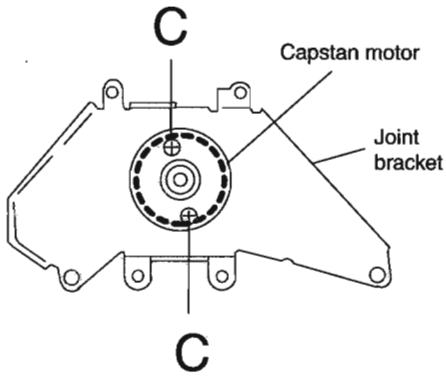

Fig.8

■ Removing the flywheel (See Fig. 9,10)

1. Remove the head amp. and mechanism control P.C.Board.
2. Remove the capstan motor assembly.
3. After turning over the cassette mechanism, remove the slit washers "a" and "b" fixing the capstan shafts R and L, and pull out the flywheels R and L respectively from behind the cassette mechanism.

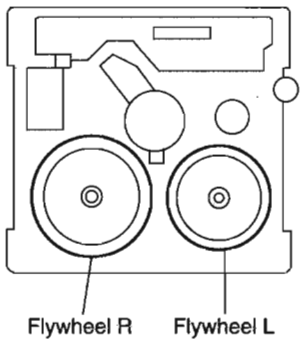

Fig.10

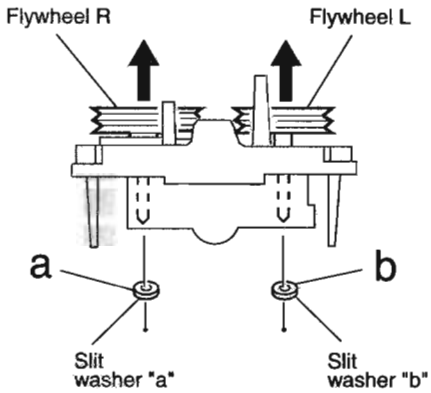

Fig.9

■ Removing the reel pulse P.C.board and solenoid (See Fig. 11)

1. Remove the five pawls (c,d,e,f,g) retaining the reel pulse P.C.Board.
2. From the surface of the reel pulse P.C.Board parts, remove the two pawls "h" and "i" retaining the solenoid.

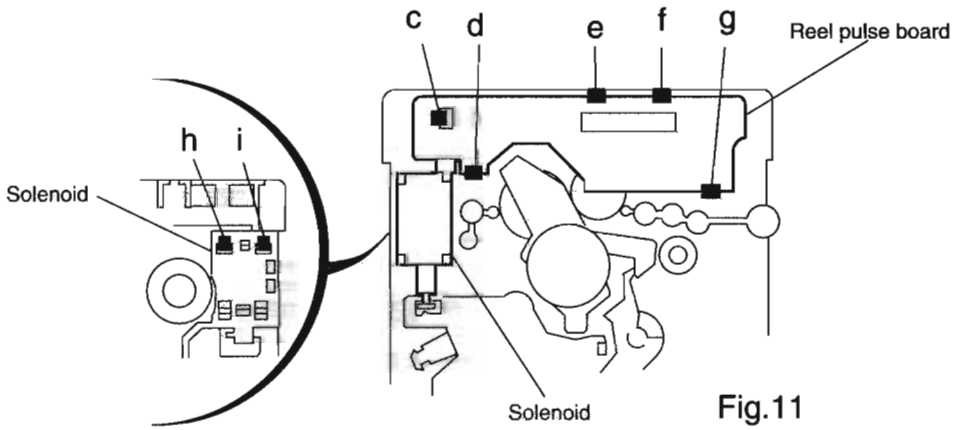

Fig.11

Adjustment method

Measurement instruments required for adjustment

1. Low frequency oscillator,
   This oscillator should have a capacity to output 0dBs to 600ohm at an oscillation frequency of 50Hz-20kHz.
2. Attenuator impedance : 600ohm
3. Electronic voltmeter
4. Frequency counter
5. Wow flutter meter
6. Test tape
   VTT712 : For Tape speed and wow flutter (3kHz)
   VTT724 : For Reference level (1kHz)
   TMT7036 : For Head angle(10kHz),Play back frequency characteristics(1kHz),and dubbing frequency characteristics(63,1,10kHz)
   Because of frequency-mixed tape with 63,1k,10k and 14kHz(250nWb/m -24dB).
   Use this tape together with a filter.
7. Blank tape
   TAPE Ⅰ: AC-225, TAPE Ⅱ: AC-514
8. Torque gauge : For play and back tension
   Forward ; TW2111A, Reverse ; TW2121A
   Fast Forward and Rewind ; TW2231A
9. Test disc
   : CTS-1000(12cm),GRG-1211(8cm)
10. Jitter meter

Measurement conditions

Power supply voltage
AC220V(50Hz) :UP model
AC240V(50Hz) : A model
AC110V/127V/220V/230～240V(50Hz/60Hz):
U, US, UX, UY, UT model

Measurement
output terminal : Speaker out
:TP101(Mesuring for TUNER/DECK/CD)
:Dummy load 6ohm

Radio input signal
AM modulation frequency : 400Hz
Modulation factor : 30%
FM modulation frequency : 400Hz
Frequency displacement : 22.5kHz

Frequency Range

AM	531kHz~1710kHz	except UX, A
	531kHz~1602kHz	only UX
	522kHz~1629kHz	only A
FM	87.5MHz~108MHz	

Standard measurement positions of volume and switch
Power : Standby (Light STANDBY Indicator)
S,A,BASS : OFF
Sound mode : OFF
Main VOL. : 0 Minimum
Traverse mecha set position : Disc 1
MIC MIX VOL : MAX
ECHO : OFF

Precautions for measurement
1. Apply 30pF and 33kohm to the IF sweeper output side and 0.082μF and 100kohm in series to the sweeper input side.
2. The IF sweeper output level should be made as low as possible within the adjustable range.
3. Since the IF sweeper is a fixed device, there is no need to adjust this sweeper.
4. Since a ceramic oscillator is used, there is no need to perform any MPX adjustment.
5. Since a fixed coil is used, there is no need to adjust the FM tracking.
6. The input and output earth systems are separated. In case of simultaneously measuring the voltage in both of the input and output systems with an electronic voltmeter for two channels, therefore, the earth should be connected particularly.
7. In the case of BTL connection amplifier, the minus terminal of speaker is not for earthing. Therefore, be sure not to connect any other earth terminal to this terminal. This system is of an OTL system.

■ Arrangement of adjusting positions

Cassette mechanism section (Mechanism A section)

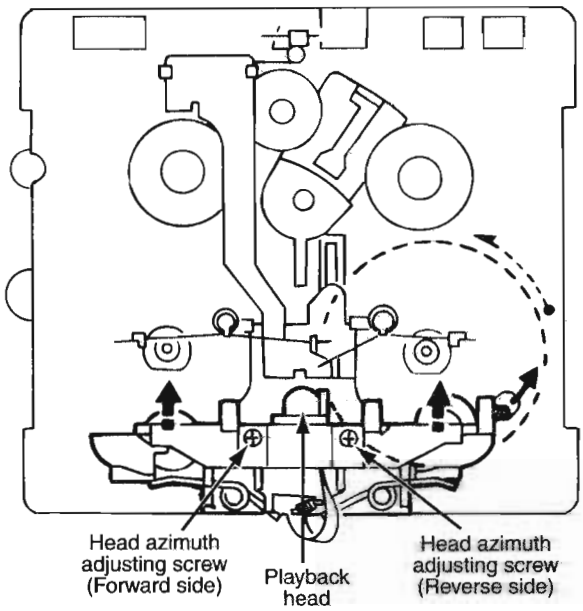

Cassette mechanism section (Back side)

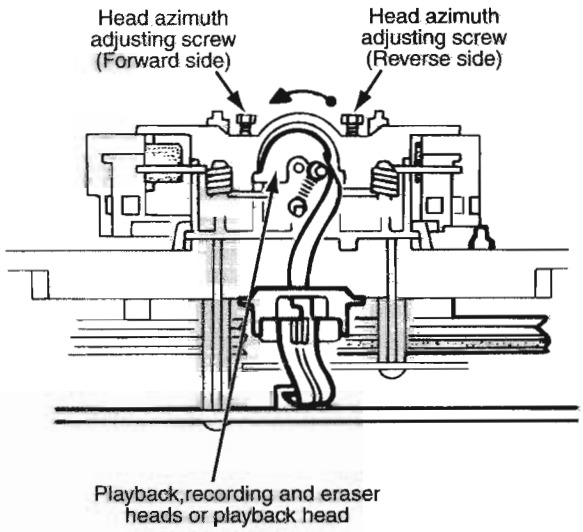

Cassette Mechanism Unit Section

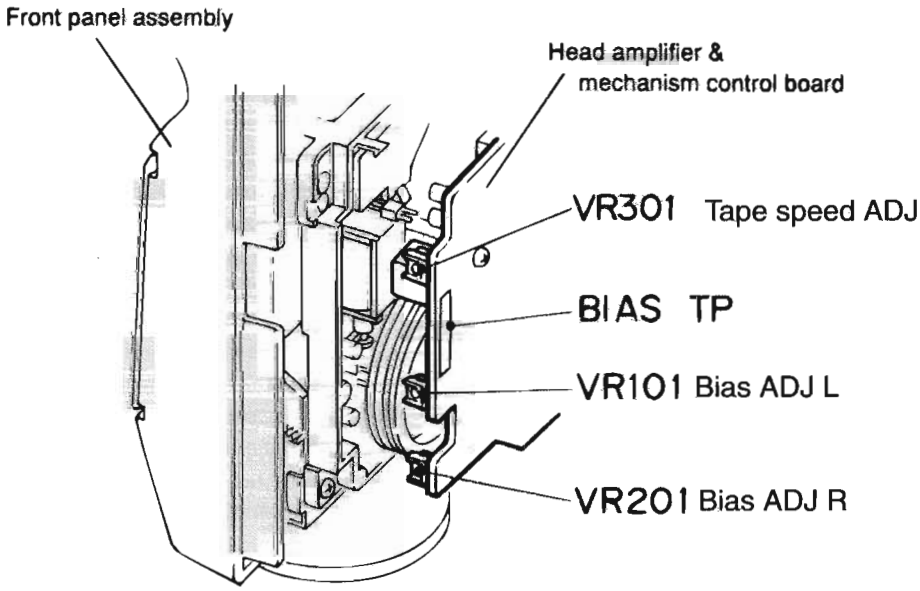

■ Tape recorder section

Items	Measurement conditions	Measurement method	Standard values	Adjusting positions
Confirmation of head angle	Test tape :TMT7036(10kHz) Measurement output terminal :Speaker terminal Speaker R (Load resistor:3Ω) :Headphone terminal	1.Playback the test tape TMT7036(10kHz). 2.With the playback mechanism or recording & playback mechanism, adjust the head azimuth screw so that the forward and reverse output levels become maximum.After adjustment,lock the head azimuth at least by half a turn. 3.In either case,this adjustment should be performed in both the forward and reverse directions with the head azimuth screw.	Maximum output	Adjust the head azimuth screw only when the head has been changed.
Confirmation of tape speed	Test tape :VTT712(3kHz) or TMT7036(3kHz) Measurement output terminal :Headphone terminal	<Constant speed> Adjust VR301 so that the frequency counter reading becomes 3,000Hz±60Hz when playing back the test tape VTT712(3kHz)with the playback mechanism or playback and recording mechanism after ending forward winding of the tape.	Tape speed of decks (A and B) :3,000Hz ±60Hz	VR301

■ Reference values for confirmation items

Items	Measurement conditions	Measurement method	Standard values	Adjusting positions
Double tape speed	Test tape :TMT7036(10kHz) Measurement output terminal :Speaker terminal Speaker R (Load resistance:3Ω) measurement output terminal :Headphone terminal	After setting to the double speed motor, confirm that the frequency counter reading becomes 4,800+400/-300Hz when the test tape VTT712 (3kHz) has been play back with the playback mechanism.	4,800+400/ -300Hz	Playback mechanism side
Difference between the forward and reverse speed. P.mecha and R/P mecha speed		When the test tape VTT712(3kHz) has been played back with the playback mechanism or recording and playback mechanism at the beginning of forward winding, the frequency counter reading of the difference between both of the mechanisms should be 6.0Hz or less.	60Hz or less	Both the playback and recording & playback mechanism
Wow & flutter	Test tape :TMT7036(10kHz) Measurement output terminal :Headphone terminal	When the test tape VTT712(3kHz) has been played back with the playback mechanism or recording and playback mechanism at the beginning of forward winding the frequency counter reading of wow & flutter should be 0.25% or less(WRMS).	with in 0.25% JIS(WTD)	Both the playback and recording & playback mechanism

■ Electrical performance

Items	Measurement conditions	Measurement method	Standard values	Adjusting positions
Adjustment of recording bias current (Reference value)	*Mode : Forward or reverse mode *Recording mode *Test tape :AC-514 and AC-225 Measurement output terminal :Both recording and headphone terminals	1.With the recording and playback mechanism, load the test tapes(AC-514 to TYP Ⅱ and AC-225 to TYP Ⅰ),and set the mechanism to the recording and pausing conditions in advance. 2.After connecting 100Ω in series to the recorder head,measure the bias current with a valve voltmeter at both of the terminals. 3.After resetting the [PAUSE] mode,start recording. At this time,adjust VR101 for LcH and VR201 for RcH so that the recording bias current values become 4.0μA (TYP Ⅰ) and 4.20μA(TYP Ⅱ).	AC-225 :4.20μA AC-514 :4.0μA	LcH :VR101 RcH :VR201
Adjustment of recording and playback frequency characteristics	Reference frequency :1kHz and 10kHz (REF:-20dB) Test tape :TYP Ⅱ AC-514 Measurement input terminal :OSC IN	1.With the recording and playback mechanism,load the test tape(AC-514 to TYP Ⅱ),and set the mechanism to the recording and pausing condition in advance. 2.While repetitively inputting the reference frequency signal of 1kHz and 10kHz from OSC IN, record and playback the test tape. 3.While recording and playing back the test tape in TYP Ⅱ,adjust VR101 for LcH and VR201 for RcH so that the output deviation between 1kHz and 10kHz becomes -1dB±2dB.	Output deviation between 1kHz and 10kH :-1dB±2dB	LcH :VR101 RcH :VR201

■ Reference values for electrical function confirmation items

Items	Measurement conditions	Measurement method	Standard values	Adjusting positions
Recording bias frequency	*Recording and playback side forward or reverse *Test tape :TYP Ⅱ AC-514 *Measurement terminal BIAS TP on P.C.board	1.While changing over to and from BIAS 1 and 2, confirm that the frequency is changed. 2.With the recording and playback mechanism. load the test tape (AC-514 to TYP Ⅱ),and set the mechanism to the recording and pausing conditions in advance. 3.Confirm that the BIAS TP frequency on the P.C.board is 100kHz±6kHz.	100kHz +9kHz -7kHz	
Eraser current (Reference value)	*Recording and playback side forward or reverse *Recording mode *Test tape :AC-514 and AC-225 Measurement terminal Both of the eraser head	1.With the recording and playback mechanism, load the test tapes(AC-514 to TYP Ⅱ and AC-225 to TYP Ⅰ),and set the mechanism to the recording and pausing condition in advance. 2.After setting to the recording conditions,connect 1MΩ in series to the eraser head on the recording and playback mechanism side,and measure the eraser current from both of the eraser terminal.	TYP Ⅱ :120mA TYP Ⅰ :75mA	

Diagnosis which uses extension wire method

System control P.C.board

1.Remove the metal cover and CD changer mechanism.
2.Remove the front panel assembly.
3.Onse screw **A** is removed, and relay board is removed.
4.As shown in fig.1, place the front panel assembly after opening it outward using the right side of the front panel as an axis.
5.The extension wire is connected with CN870 & CN871 on the INPUT/OUTPUT board and CN860 & CN861 on the main board.

Extension wire parts No.

QUQ412-4020CJ	FLAT WIRE
JIG-MXJ500	CONNECTOR Board x 2

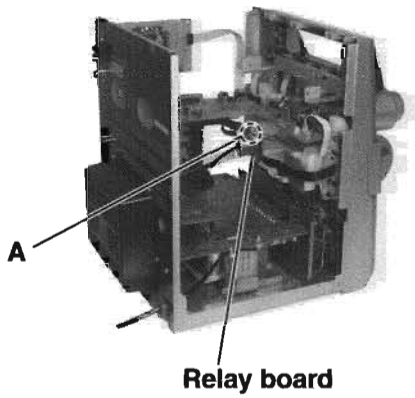

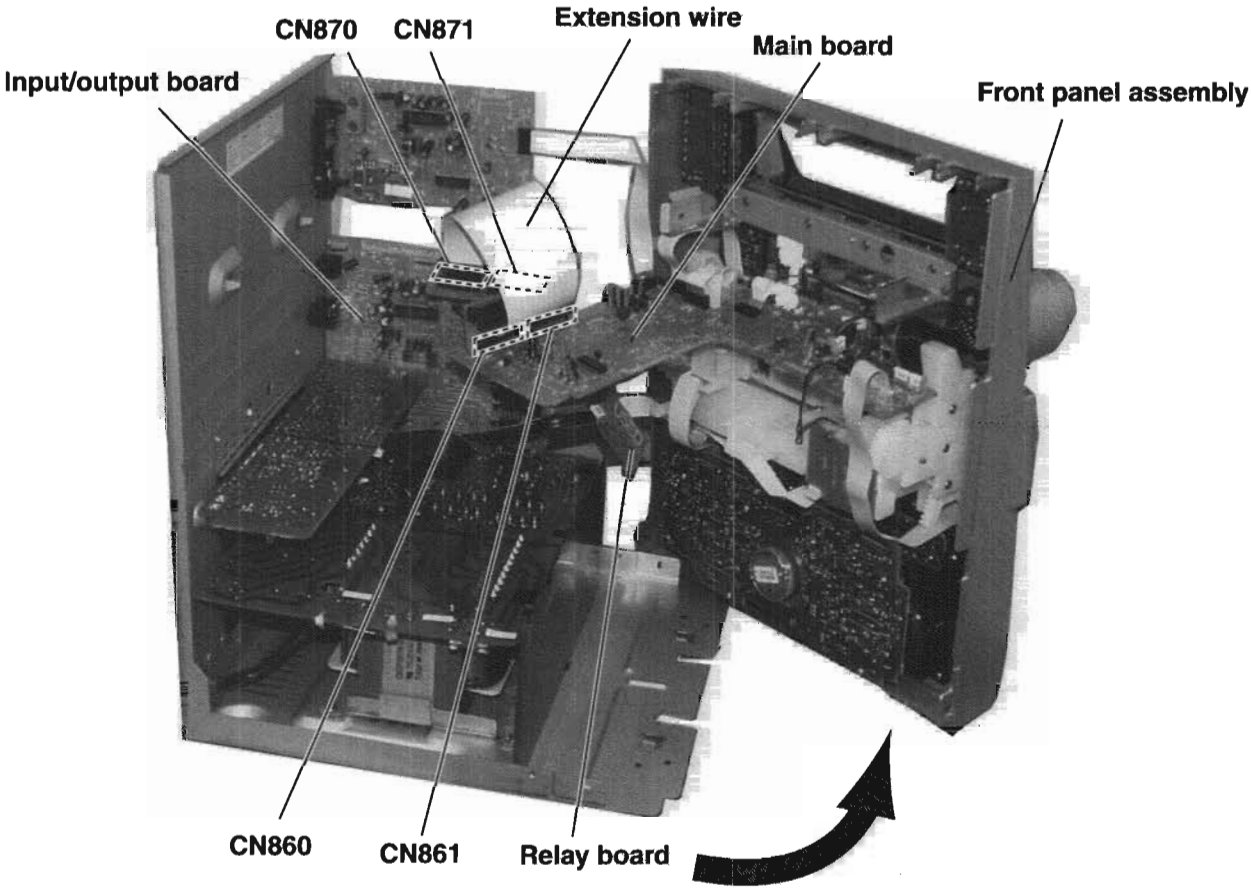

Fig.1

Flow of functional operation until TOC read

Power ON → Play Key → Slider turns REST SW ON.

Check Point: Confirm that the voltage at the pin5 of CN801 is "H"\"L"\"H".

↓

Automatic tuning of TE offset

↓

Laser ON → Check that the voltage at the pin40 of IC651 is + 5V?

↓

Detection of disc

↓

Automatic tuning of Focus offset

↓

Automatic measurement of Focus S-curve amplitude → Confirm that the Focus error S-cuve signal at the pin28 of IC651 is approx.2Vp-p

↓

Disc is rotated → Confirm that the signal from pin24 IC651 is 0V as a accelerated pulse during approx.400ms.

↓

Focus servo ON (Tracking servo ON)

↓

Automatic measurement of Tracking error amplitude → Confirm the waveform of the Tracking error signal. at the pin 25 of IC601 (R604) (See fig-1)

↓

Automatic tuning of Tracking error balance

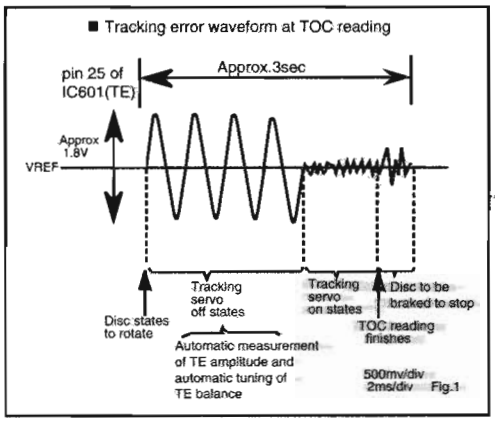

↓

Automatic tuning of Focus error balance

↓

Automatic tuning of Focus error gain

↓

Automatic tuning of Tracking error gain

↓

TOC reading → Confirm the eys-pattern at the lead of TP1

↓

Play a disc

Maintenance of laser pickup

(1) Cleaning the pick up lens
Before you replace the pick up, please try to clean the lens with a alcohol soaked cotton swab.

(2) Life of the laser diode
When the life of the laser diode has expired, the following symptoms will appear.

1. The level of RF output (EFM output:amplitude of eye pattern) will below.

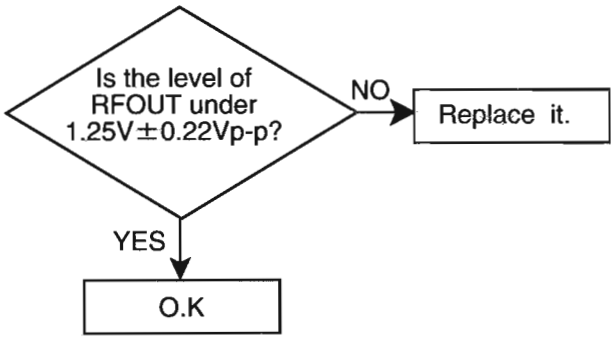

Replacement of laser pickup

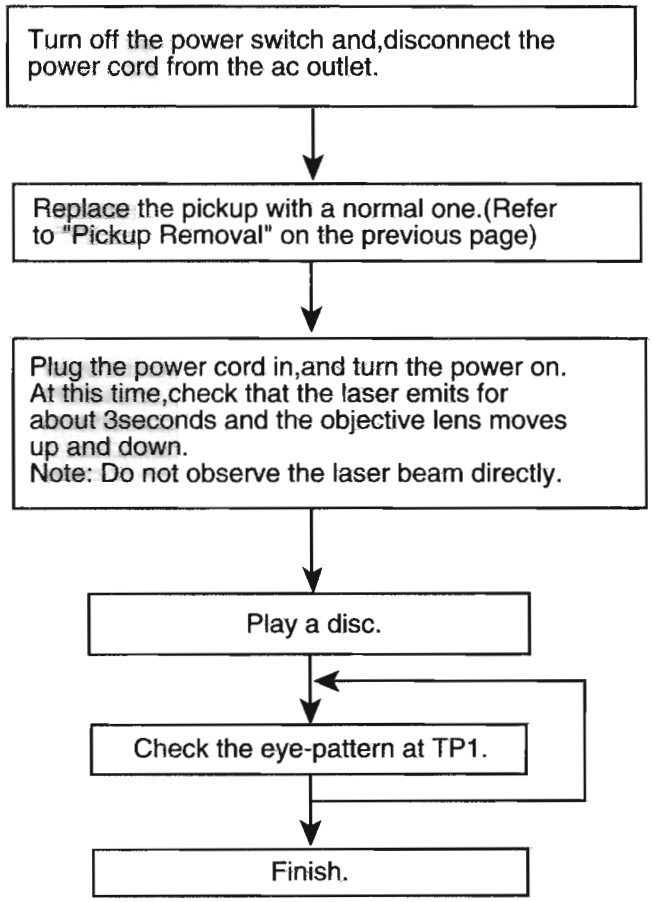

(3) Semi-fixed resistor on the APC PC board The semi-fixed resistor on the APC printed circuit board which is attached to the pickup is used to adjust the laser power.Since this adjustment should be performed to match the characteristics of the whole optical block, do not touch the semi-fixed resistor.
If the laser power is lower than the specified value,the laser diode is almost worn out, and the laser pickup should be replaced.
If the semi-fixed resistor is adjusted while the pickup is functioning normally,the laser pickup may be damaged due to excessive current.

Description of major ICs

■ AN8806SB-W (IC601) : RF&Servo AMP

1.Pin layout

PD	1	36	PDAC
LD	2	35	PDBD
LDON	3	34	PDF
LDP	4	33	PDE
VCC	5	32	PDER
RF-	6	31	PDFR
RF OUT	7	30	TBAL
RF IN	8	29	FBAL
C.AGC	9	28	EF-
ARF	10	27	EF OUT
C.ENV	11	26	TE-
C.EA	12	25	TE OUT
CS BDO	13	24	CROSS
BDO	14	23	TE BPF
CS BRT	15	22	VDET
OFTR	16	21	LD OFF
/NRFDET	17	20	VREF
GND	18	19	ENV

2.Block diagram

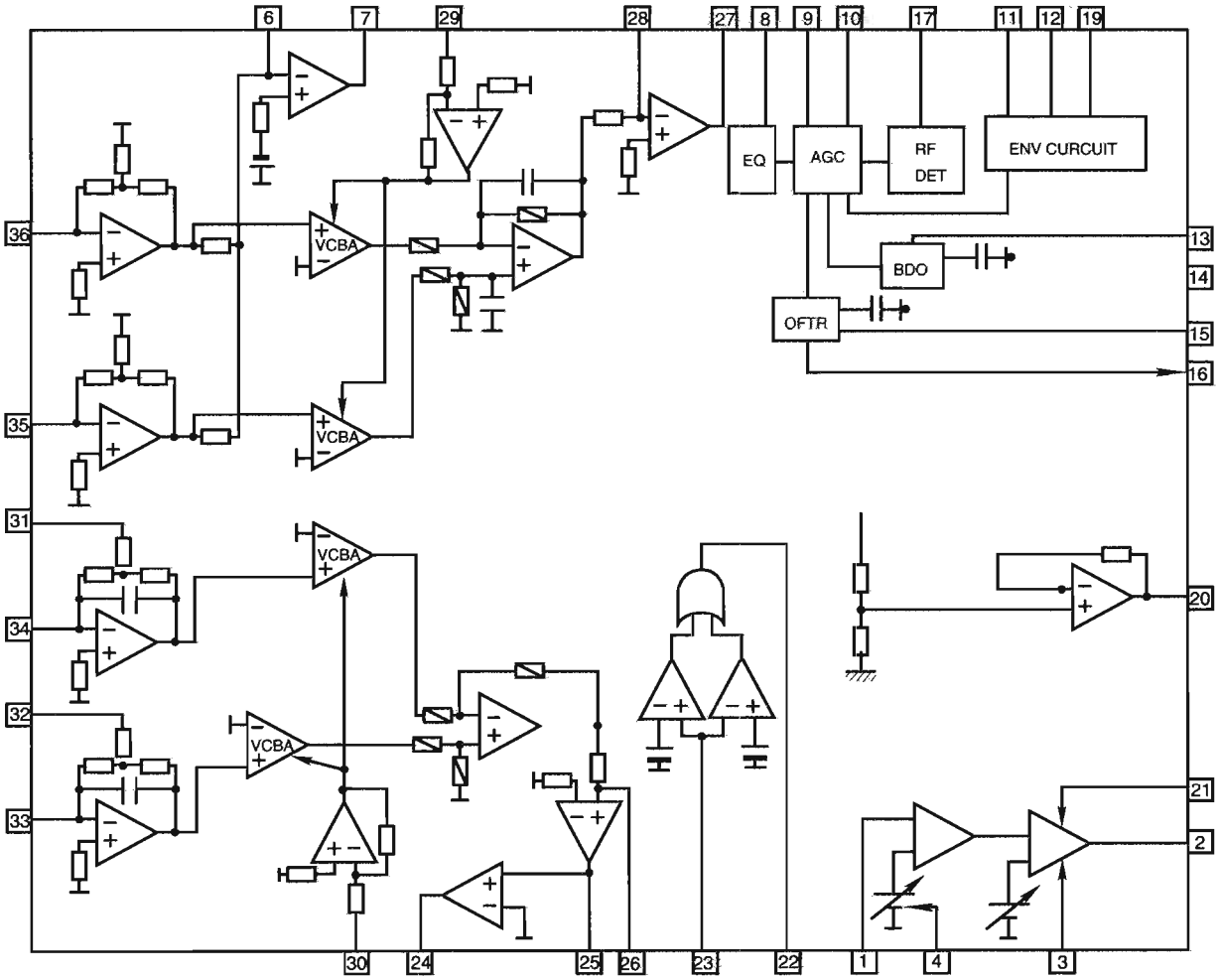

3. Pin function

Pin No.	Symbol	I/O	Description
1	PD	I	APC amp input terminal
2	LD	O	APC amp output terminal
3	LD ON	I	APC ON/OFF control terminal
4	LDP	--	Connect to ground
5	VCC	--	Power supply
6	RF-	I	Inverse input pin for RF amp
7	RF OUT	O	RFamp output
8	RF IN	I	RF input
9	C.AGC	I/O	Connecting pin of AGC loop filter
10	ARF	O	RF output
11	C.ENV	I/O	A capacitor is connected to this terminal to detect the envelope of RF signal
12	C.EA	I/O	A capacitor is connected to this terminal to detect the envelope of RF signal
13	CS BDO	I/O	A capacitor is connected to detect the lower envelope of RF signal
14	BDO	O	BDO output pin
15	CS BRT	I/O	A capacitor is connected to detect the lower envelope of RF signal
16	OFTR	O	Of-track status signal output
17	/NRFDET	O	RF detection signal output
18	GND	--	Ground
19	ENV	O	Envelope output
20	VREF	O	Reference voltage output
21	LD OFF	--	Connect to ground
22	VDET	O	Vibration detection signal output
23	TE BPF	I	Input pin of tracking error through BPF
24	CROSS	O	Tracking error cross output
25	TE OUT	O	Tracking error signal output
26	TE-	I	Inverse input pin for tracking error amp
27	FE OUT	O	Output pin of focus error
28	FE-	I	Inverse input pin for focus error amp
29	FBAL	I	Focus balance control
30	TBAL	I	Tracking balance control
31	PDFR	I/O	F I-V amp gain control
32	PDER	I/O	E I-V amp gain control
33	PDF	I	I-V amp input
34	PDE	I	I-V amp input
35	PD BD	I	I-V amp input
36	PD AC	I	I-V amp input

■ BA15218(IC526):OP AMP.

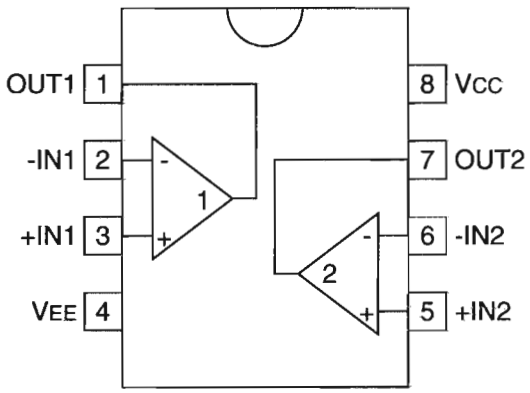

■ BU4094BCF-X(IC303,IC304):Serial to parallel port extension

1.Pin layout

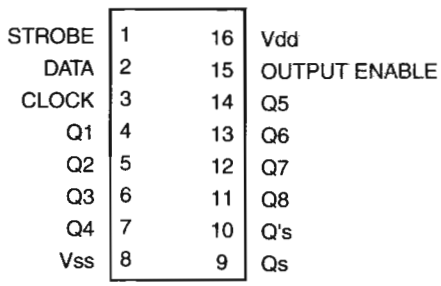

2.Block diagram

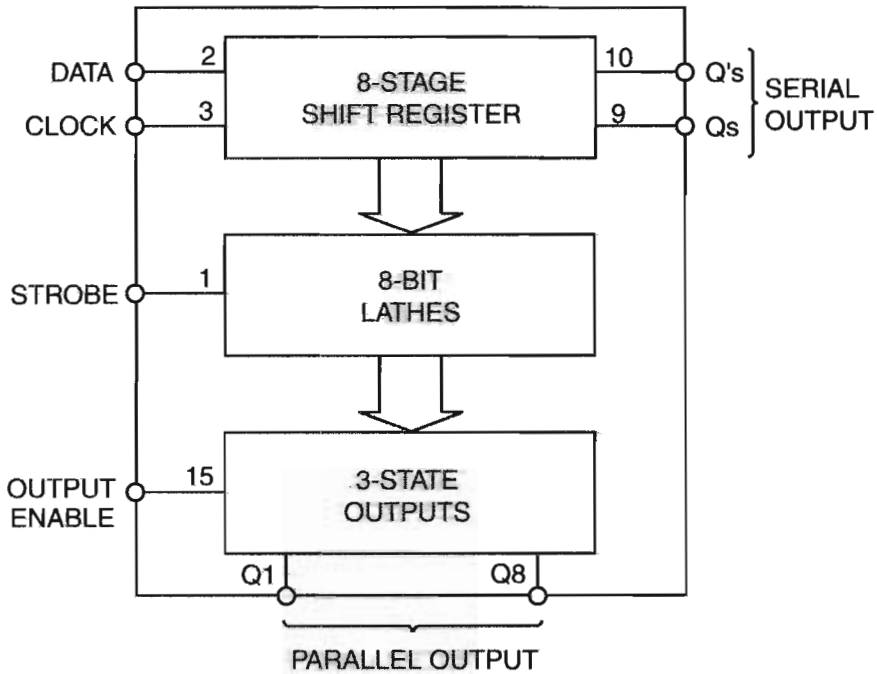

■ GP1U281X (IC915) : Receiver for remote controller

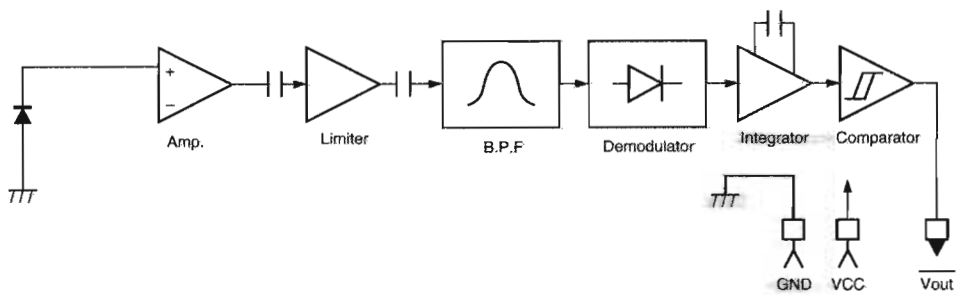

■ BA6897FP-W(IC801): 4channel driver

1.Pin layout & Block diagram

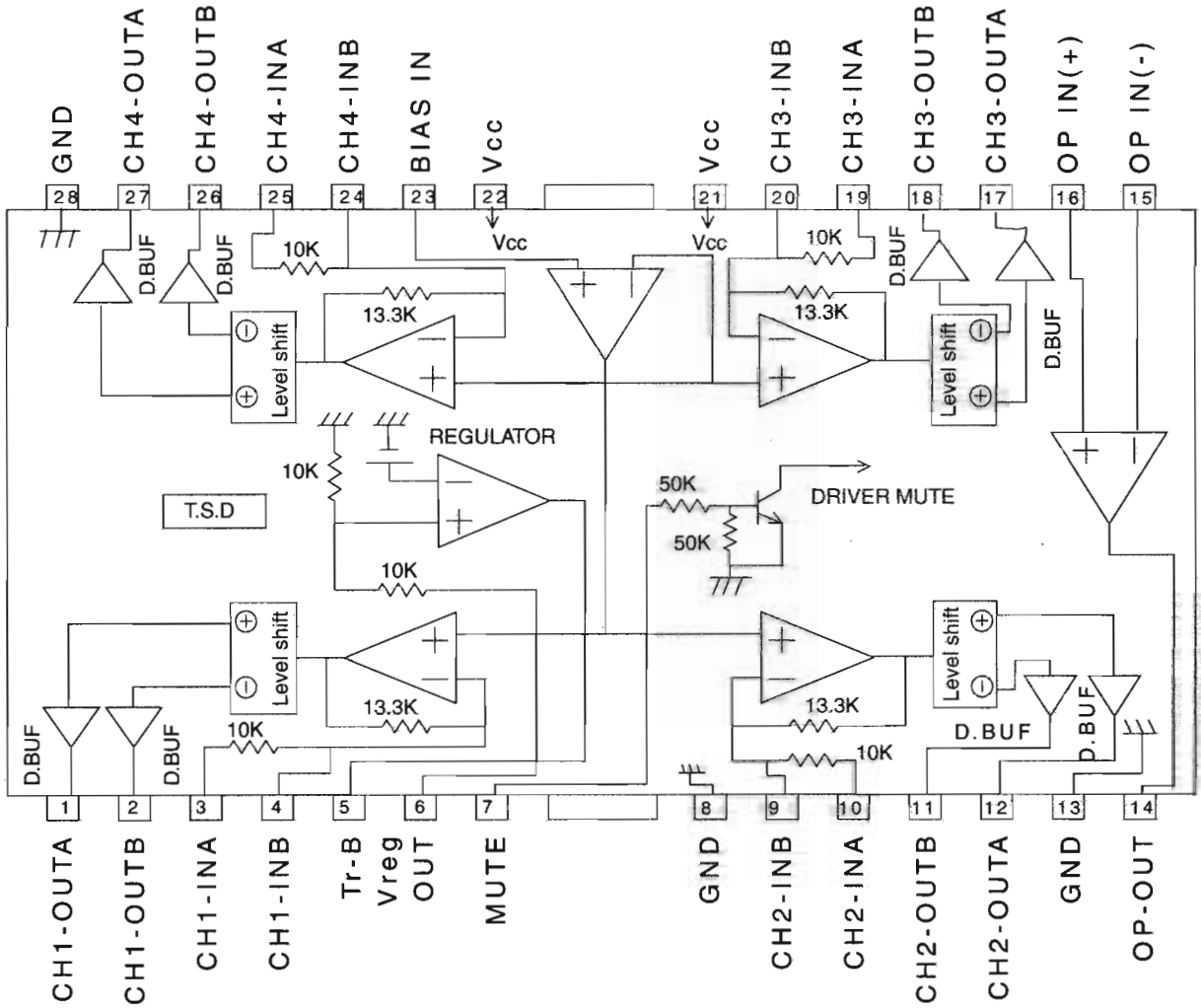

T.S.D;Thermal shutdown

D.BUF:Drive buffer

2.Pin function

Pin NO.	Symbol	Function	Pin NO.	Symbol	Function
1	CH1-OUTA	Driver CH1 - output	15	OP IN(-)	Operation amplifier - input
2	CH1-OUTB	Driver CH1 + output	16	OP IN(+)	Operation amplifier + output
3	CH1-INA	Driver CH1 input	17	CH3-OUTA	Driver CH3 - output
4	CH1-INB	Driver CH1 gain adjustment Input terminal	18	CH3-OUTB	Driver CH3 + output
5	Tr-B	Connect to the base of external Tr	19	CH3-INA	Driver CH3 input
6	Vreg OUT	Fixed voltage output	20	CH3-INB	Driver CH3 gain adjustment Input terminal
7	MUTE	Mute control terminal	21	Vcc	Power supply terminal
8	GND	GND	22	Vcc	Power supply terminal
9	CH2-INB	Driver CH2 gain adjustment Input terminal	23	BAIS IN	Bias amplifier input terminal
10	CH2-INA	Driver CH2 input	24	CH4-INB	Driver CH4 gain adjustment Input terminal
11	CH2-OUTB	Driver CH2 + output	25	CH4-INA	Driver CH4 input
12	CH2-OUTA	Driver CH2 - output	26	CH4-OUTB	Driver CH4 + output
13	GND	Sub-slate GND	27	CH4-OUTA	Driver CH4 - output
14	OPOUT	Operation amplifier output	28	GND	Sub-slate GND

■ LA1838(IC1): FM AM IF AMP&detector, FM MPX decoder

1. Block Diagram

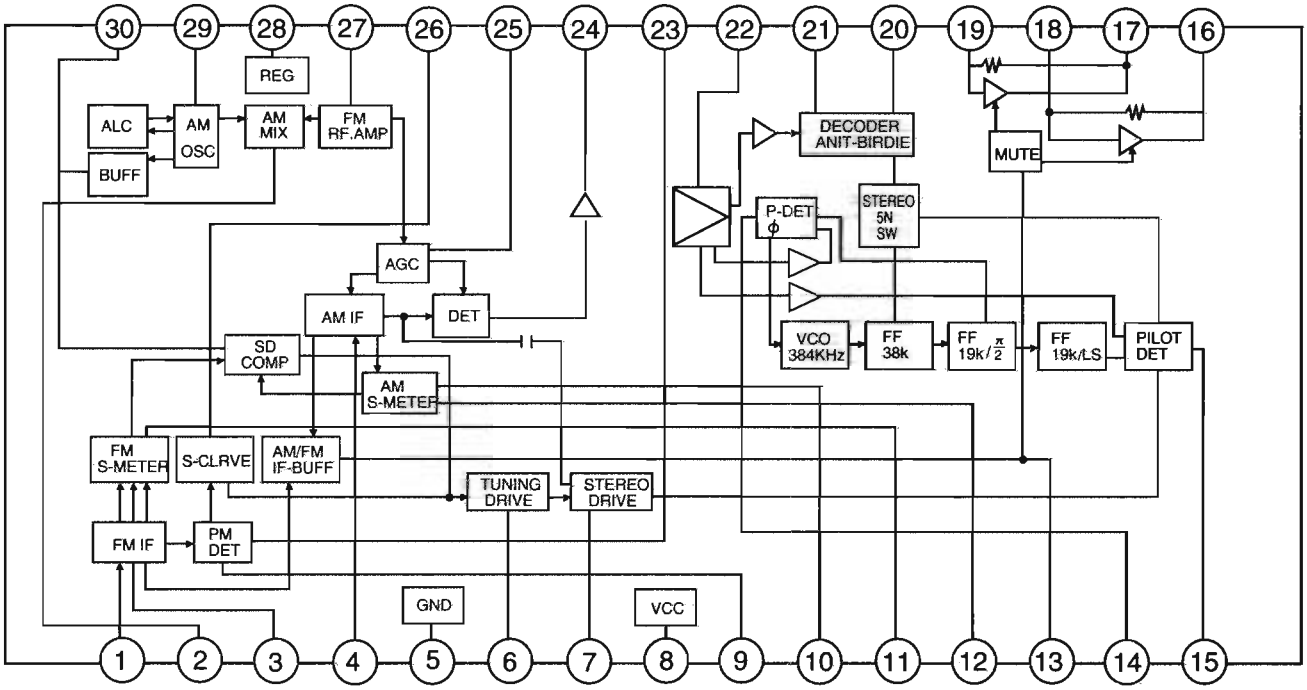

2. Pin Function

Pin No.	Symbol	I/O	Function	Pin No.	Symbol	I/O	Function
1	FM IN	I	This is an input terminal of FM IF signal.	16	L OUT	O	Left channel signal output.
2	AM MIX	O	This is an out put terminal for AM mixer.	17	R OUT	O	Right channel signal output.
3	FM IF	I	Bypass of FM IF	18	L IN	I	Input terminal of the left channel post AMP.
4	AM IF	I	Input of AM IF Signal.	19	R IN	I	Input terminal of the right channel post AMP.
5	GND	—	This is the device ground terminal.	20	RO	O	Mpx Right channel signal output.
6	TUNED	O	When the set is tuning, this terminal becomes "L".	21	LO	O	Mpx Left channel signal output.
7	STEREO	O	Stereo indicator output. Stereo "L", Mono: "H"	22	IF IN	I	Mpx input terminal
8	VCC	—	This is the power supply terminal.	23	FM OUT	O	FM detection output.
9	FM DET	—	FM detect transformer.	24	AM DET	O	AM detection output.
10	AM SD	—	This is a terminal of AM ceramic filter.	25	AM AGC	I	This is an AGC voltage input terminal for AM
11	FM VSM	O	Adjust FM SD sensitivity.	26	AFC	—	This is an output terminal of voltage for FM-AFC.
12	AM VSM	O	Adjust AM SD sensitivity.	27	AM RF	I	AM RF signal input.
13	MUTE	I/O	When the signal of IF REQ of IC121(LC72131) appear, the signal of FM/AM IF output. //Muting control input.	28	REG	O	Register value between pin 26 and pin28 desides the frequency width of the input signal.
14	FM/AM	I	Change over the FM/AM input. "H" :FM, "L" : AM	29	AM OSC	—	This is a terminal of AM Local oscillation circuit.
15	MONO/ST	O	Stereo : "H", Mono: "L"	30	OSC BUFFER	O	AM Local oscillation Signal output.

■ LB1641 (IC853) : DC Motor driver

1. Pin Layout

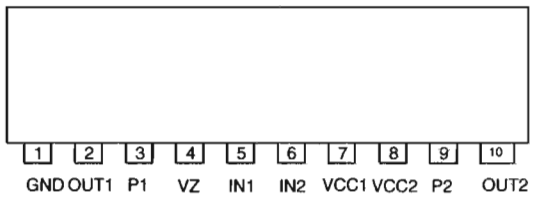

2. Pin Functions

Input		Output		Mode
IN1	IN2	OUT1	OUT2	
0	0	0	0	Brake
1	0	1	0	CLOCKWISE
0	1	0	1	COUNTER-CLOCKWISE
1	1	0	0	Brake

■ TA8409S(IC851,IC852):Motor driver

1.Pin layout

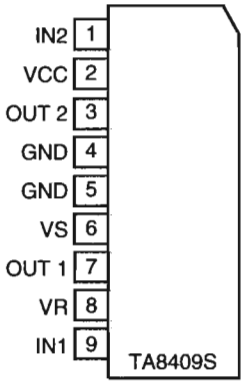

2.Pin function

INPUT		OUTPUT		MODE
IN1	IN2	OUT1	OUT2	MOTOR
0	0	∞	∞	STOP
1	0	H	L	CW/CCW
0	1	L	H	CCW/CW
1	1	L	L	BRAKE

■ BU4094BC(IC811):Serial to parallel port extension

1.Pin layout

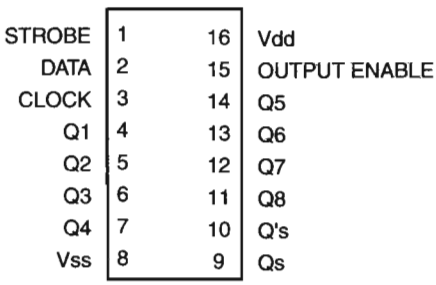

2.Block diagram

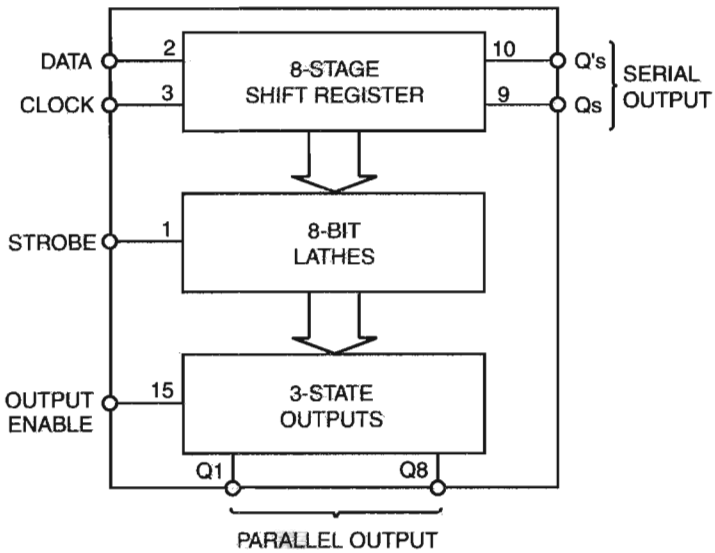

■LC72136N (IC2) : PLL Frequency synthesizer

1. Pin layout

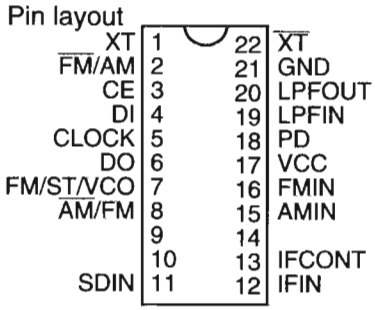

2. Block

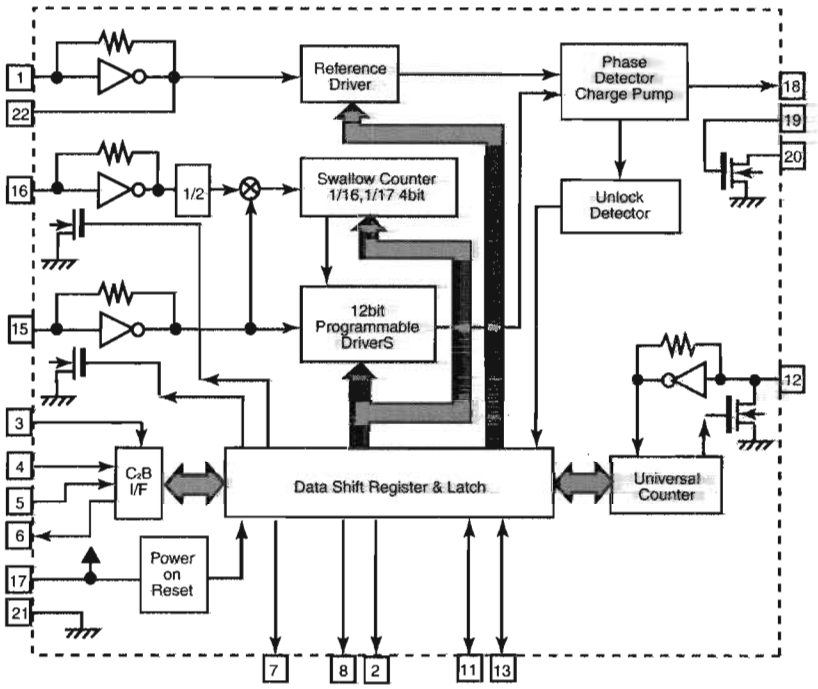

3. Function

Pin No.	Symbol	I/O	Function	Pin No.	Symbol	I/O	Function
1	XT	I	X'tal oscillator connect (75kHz)	12	IFIN	I	IF counter signal input
2	$\overline{FM}$/AM	O	LOW:FM mode	13	IFCONT	O	IF signal output
3	CE	I	When data output/input for 4pin(input) and 6pin(output): H	14		-	Not use
4	DI	I	Input for receive the serial data from controller	15	AMIN	I	AM Local OSC signal output
5	CLOCK	I	Sync signal input use	16	FMIN	I	FM Local OSC signal input
6	DO	O	Data output for Controller Output port	17	VCC	-	Power suplly(VDD=4.5-5.5V) When power ON:Reset circuit move
7	FM/ST/VCO	O	"Low": MW mode	18	PD	O	PLL charge pump output(H: Local OSC frequency Height than Reference frequency. L: Low Agreement: Height impedance)
8	$\overline{AM}$/FM	O	Open state after the power on reset	19	LPFIN	I	Input for active lowpassfilter of PLL
9	LW	I/O	Input/output port	20	LPFOUT	O	Output for active lowpassfilter of PLL
10	MW	I/O	Input/output port	21	GND	-	Connected to GND
11	SDIN	I/O	Data input/output	22	$\overline{XT}$	I	X'tal oscillator(75KHz)

■ TDA7439 (IC436) : Conrtol volume

1.Pin layout

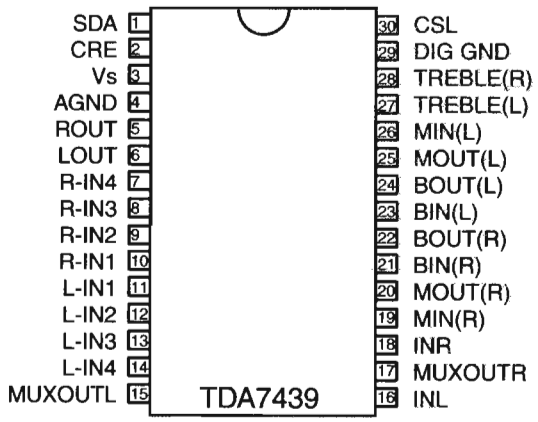

2.Block diagram

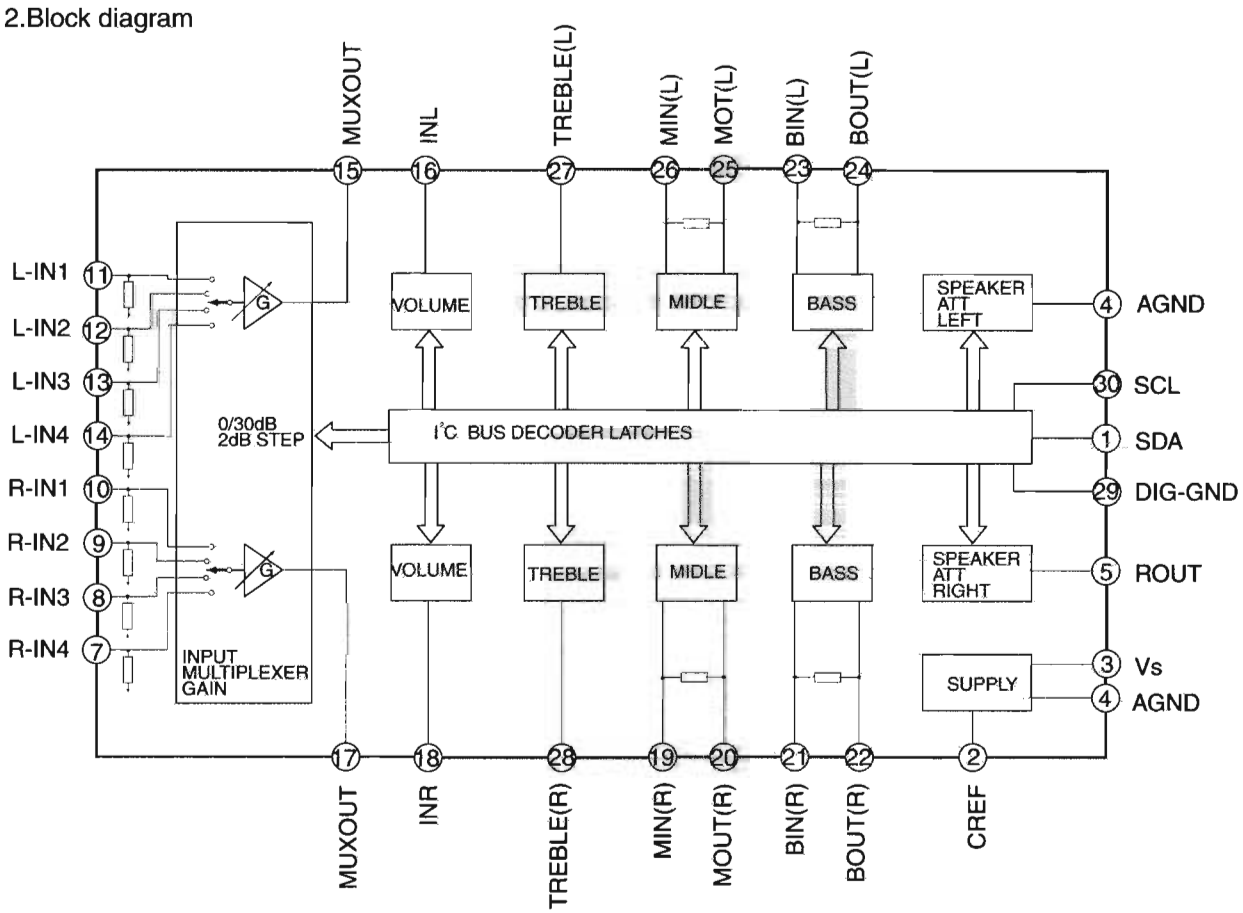

■ MN101C35DEA (IC810) : System controller

Pin function (1/2)

Pin No.	Symbol	I/O	Function
1	KCMND	O	SVC3 Serial data output
2	MSTAT	I	SVC3 status input input
3	KCLK	I	SVC3 Serial clock input
4	DATAOUT	O	SLC/TUNER data output
5	DATAIN	I	TUNER data input
6	CK	O	SLC/TUNER clock
7	BEAT	O	Beat cut signal output of TUNER
8	VDD	-	Power supply +5V
9,10	OSC2,1	I/O	Oscillation terminal (8MHz)
11	VSS	-	Connect to GND
12,13	XI,XO	I/O	Sub clock (32.768kHz)
14	MMOD	-	Connect to GND
15	VREF-	-	Connect to GND
16~19	KEY1~4	I	Key matrix input 1~4
20	SLCKEY1	I	Tape B playback/recording detect switch
21	SLCKEY2	I	Tape B playback detect switch
22	SLCKEY3	I	Tape A playback detect switch
23	SPI	I	SPI IN
24	VREF+	I	AD port voltage reference
25	MRDY	I	VC3 Ready
26	RESET	I	Reset signal input
27	P OPEN	I	Rolling panel open detection signal input
28	P CLOSE	I	Rolling panel close detection signal input
29	VOLLED	O	LED Control signal output (VOL)
30	MSI	I	MS detector signal input
31	ECHO2	-	Echo ON/OFF(Not used)
32	ECHO1	-	Echo ON/OFF(Not used)
33	REMIN	I	Remote control signal input
34	PHOTOA	I	Tape A mechanism running detection signal input
35	PHOTOB	I	Tape B mechanism running detection signal input
36	INH	I	Inhibit signal input
37	RDSCLK	I	Clock signal input from IC3 (B/E/EN model)
38	PRT	I	Protector input
39	EXTCE	-	EXT IC Chip enable
40~41	BASSVOL+/-	I	Bass volume rotary encoder input(+/-)
42	RDS-DATA	I	RDS data input from IC3(B/E/EN model)
43	SPIA	-	SPI Control A
44	SPIB	-	SPI Control B
45,46	VOL+/-	I	Volume rotary encoder input (+/-)
47	MPX	I	Stereo detect
48	FVOLDA	O	Front volume data output
49	VOLCLK	O	Clock sibnal output to IC436
50	BASSLED	O	LED Control signal output (BASS)

Pin function (2/2)

Pin No.	Symbol	I/O	Function
51~63	G13~G1	O	FL grid control signal output
64~87	P1~P24	O	FL segment control signal output
88	SLCCE	O	SLC Chip enable signal output to IC303,IC304
89	AUX LED	O	LED Control signal output (AUX)
90	DOORCL	O	Rolling panel motor control signal output
91	DOOR OPEN	O	Rolling panel motor control signal output
92	CDLED	O	LED Control signal output (CD)
93	TAPE LED	O	LED Control signal output (TAPE)
94	TU LED	O	LED Control signal output (TUNER)
95	SMUTE	O	System mute control signal output
96	BTU+	O	Tuner supply control
97	POUT	O	Power ON/OFF
98	TUCE	O	TUNER Chip enable signal output
99	VC3RESET	O	VC3 reset output
100	VPP	-	Power supply

■ NJM4580L (IC901) : Mic Amplifier

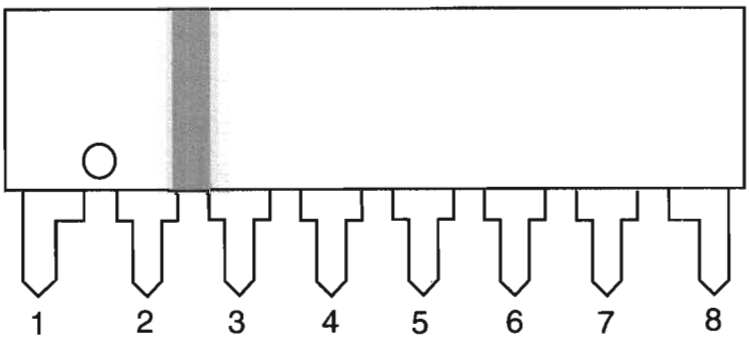

1. A OUTPUT
2. A-INPUT
3. A+INPUT
4. V⁻
5. B+INPUT
6. B-INPUT
7. B OUTPUT
8. V+

■ MN35510 (IC651) : DIGITAL SERVO&DIGITAL SIGNAL PROCESSER

1. Terminal Layout

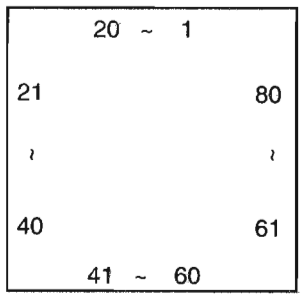

2.Block Diagram

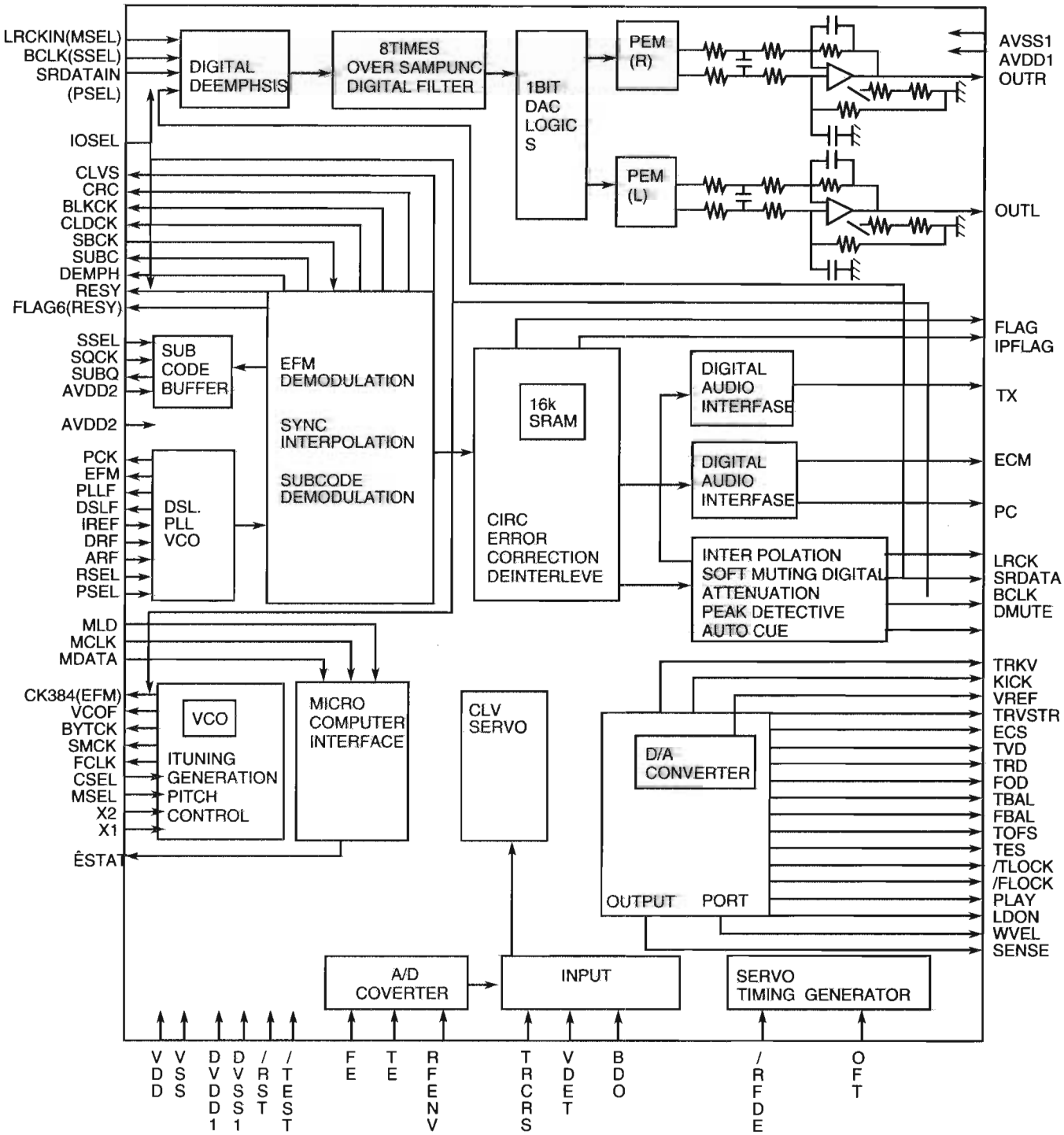

3. Description

Pin No.	symbol	I/O	Description	Pin No.	symbol	I/O	Description
1	BCLK	O	Not used	41	TES	O	Tracking error shunt signal output(H:shunt)
2	LRCK	O	Not used	42	PLAY	—	Not used
3	SRDATA	O	Not used	43	WVEL	—	Not used
4	DVDD1	—	Power supply (Digital)	44	ARF	I	RF signal input
5	DVSS1	—	Connected to GND	45	IREF	I	Reference current input pin
6	TX	O	Digital audio interface output	46	DRF	I	Bias pin for DSL
7	MCLK	I	μ com command clock signal input (Data is latched at signal's rising point)	47	DSLF	I/O	Loop filter pin for DSL
8	MDATA	I	μ com command data input	48	PLLF	I/O	Loop filter pin for PLL
9	MLD	I	μ com command load signal input	49	VCOF	—	Not used
10	SENSE	O	Not used	50	AVDD2	—	Power supply(Analog)
11	FLOCK	O	Not used	51	AVSS2	—	Connected to GND(Analog)
12	TLOCK	O	Not used	52	EFM	—	Not used
13	BLKCK	O	sub-code·block·clock signal output	53	PCK	—	Not used
14	SQCK	I	Outside clock for sub-code Q resister input	54	PDO	—	Not used
15	SUBQ	O	Sub-code Q -code output	55	SUBC	—	Not used
16	DMUTE	—	Connected to GND	56	SBCK	—	Not used
17	STATUS	O	Status signal (CRC,CUE,CLVS,TTSTOP,ECLV,SQOK)	57	VSS	—	Connected to GND(for X'tal oscillation circuit)
18	RST	I	Reset signal input (L:Reset)	58	XI	I	Input of 16.9344MHz X'tal oscillation circuit
19	SMCK	—	Not used	59	X2	O	Output of X'tal oscillation circuit
20	PMCK	—	Not used	60	VDD	—	Power supply(for X'tal oscillation circuit)
21	TRV	O	Traverse enforced output	61	BYTCK	—	Not used
22	TVD	O	Traverse drive output	62	CLDCK	—	Not used
23	PC	—	Not used	63	FCLK	—	Not used
24	ECM	O	Spindle motor drive signal (Enforced mode output) 3-State	64	IPPLAG	—	Not used
25	ECS	O	Spindle motor drive signal (Servo error signal output)	65	FLAG	—	Not used
26	KICK	O	Kick pulse output	66	CLVS	—	Not used
27	TRD	O	Tracking drive output	67	CRC	—	Not used
28	FOD	O	Focus drive output	68	DEMPH		Not used
29	VREF	I	Reference voltage input pin for D/A output block (TVD,FOD,FBA,TBAL)	69	RESY	—	Not used
30	FBAL	O	Focus Balance adjust signal output	70	IOSEL	—	pull up
31	TBAL	O	Tracking Balance adjust signal output	71	TEST	—	pull up
32	FE	I	Focus error signal input(Analog input)	72	AVDD1	—	Power supply(Digital)
33	TE	I	Tracking error signal input(Analog input)	73	OUT L	O	Lch audio output
34	RF ENV	I	RF envelope signal input(Analog input)	74	AVSS1	—	Connected to GND
35	VDET	I	Vibration detect signal input(H:detect)	75	OUT R	O	Rch audio output
36	OFT	I	Off track signal input(H:off track)	76	RSEL	—	pull up
37	TRCRS	I	Track cross signal input	77	CSEL	—	Connected to GND
38	RFDET	I	RF detect signal input(L:detect)	78	PSEL	—	Connected to GND
39	BDO	I	BDO input pin(L:detect)	79	MSEL	—	Connected to GND
40	LDON	O	Laser ON signal output(H:on)	80	SSEL	—	Pull up

■ UPD78055GCA37 (IC251):CD Changer control

1. Terminal Layout

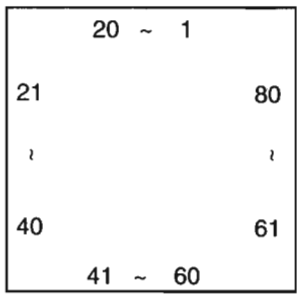

2. Pin function

Pin No.	symbol	I/O	Description	Pin No.	Symbol	I/O	Description
1	DEMPH	I	Deemphasis input	41	LM DOWN	O	L CAM down
2	DEMPHO	O	Deemphasis output	42	RM UP	O	R CAM up
3	OS OFF	I	On screen display on/off	43	RMDOWN	O	R CAM down
4	AVSS	-	Connected to GND	44	CHECK	I	Not used
5	MCS	I	Mode control select	45	CHECK1	I	Not used
6	MRDY	I	SUB Ready	46	CHECK2	I	Not used
7	AVREF1	-	AV reference	47	CHECK3	I	Not used
8	KCMND		SVC3 Serial data out put	48~59			connected to GND
9	MSTAT	O	SVC3 Status input input	60	RESET	I	VC3 reset out
10	KCLK	I	SVC3 Serial clock input	61	STAT	I	Statues signal
11	SUB	I	Sub-code Q code output	62	HREG	O	Not used
12	RST	O	Reset signal input (L : Reset)	63	HRDY	I	Not used
13	SQCK	I	Outside clock for sub-code Q resister input	64	DRMUTE	O	BTL Driver mute
14	DMUTE	I	Digital mute	65	MCLK	I	μ com command clock signal input
15	MREQ	O	Not used	66	MDATA	I	μ com command data input
16	VCDEMP	-	Not used	67	MLD	I	μ com command lode signal input
17	SRDATA	-	Not used	68	VDD	-	Power supply (for X' tal Q oscillation circuit)
18	SRCLK	-	Not used	69	X2	O	Out of X' tal oscillation circuit
19~26	CAM0~7	I	CAM SW input	70	X1	I	Input of 16.9344MHz X' tal oscillation circuit
27~29	1~3SSW	I	Sub tray SW input	71	IC	-	connected to GND
30~32	3~1MSW	I	Sub tray SW output	72	XT2	-	Not used
33	VSS	-	Connected to GND	73	REST	I	Rest SW input
34	DISC	I	Disk sensor	74	AVDD	-	A/D converter power supply
35	SHIFT	I	Test mode(Not used)	75	AVREF	-	Digital GND
36	MNT	I	Test mode(Not used)	76	SSEL	-	Not used
37	MNT1	I	Test mode(Not used)	77	MSEL	-	Not used
38	MNT2	I	Test mode(Not used)	78	PSEL	-	Not used
39	VCORST	-	Not used	79	IOSEL	O	Data select out
40	LMUP	O	L CAM up	80	P ON	O	Power ON/OFF

■ BA3837(IC466):MIC Mixer

1.Block diagram

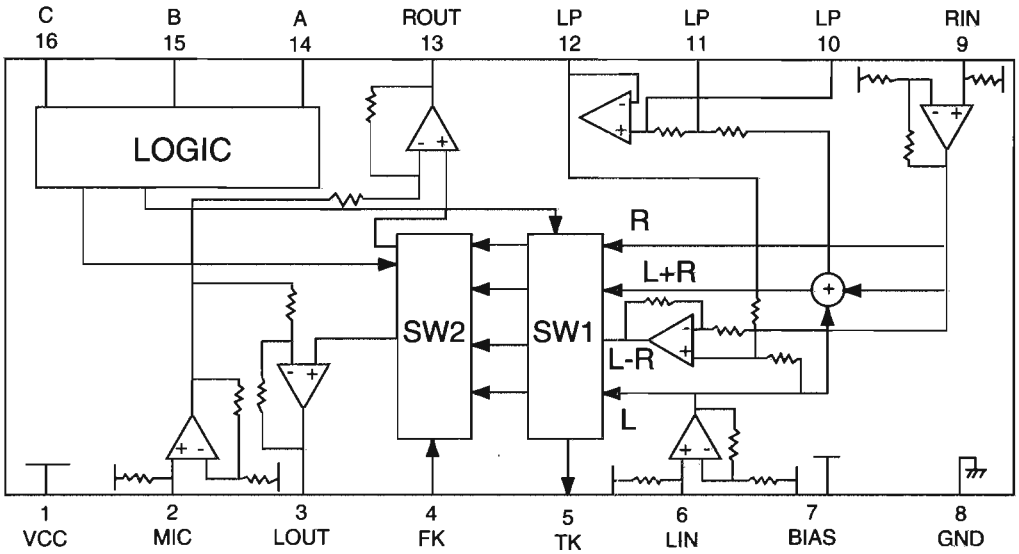

2.Pin function

Pin No.	Symbol	I/O	Description
1	VCC	-	Power supply
2	MIC IN	I	Microphone mixing input
3	LOUT	O	Channel L output
4	FK	-	Non connect
5	TK	-	Non connect
6	LIN	I	Channel L input
7	BIAS	I	Signal bias
8	GND	-	Connect to GND
9	RIN	I	Channel R input
10	LPF1	O	Connects to LPF time constant element
11	LPF2	O	Connects to LPF time constant element
12	LPF3	O	LPF outpout
13	ROUT	O	Channel R output
14	CONTA	I	Mode select input A
15	CONTB	I	Mode select input B
16	CONTC	I	Mode select input C

■ BU9253AS(IC902) : LPF&ECHO MIX.

1.Pin layout & block diagram

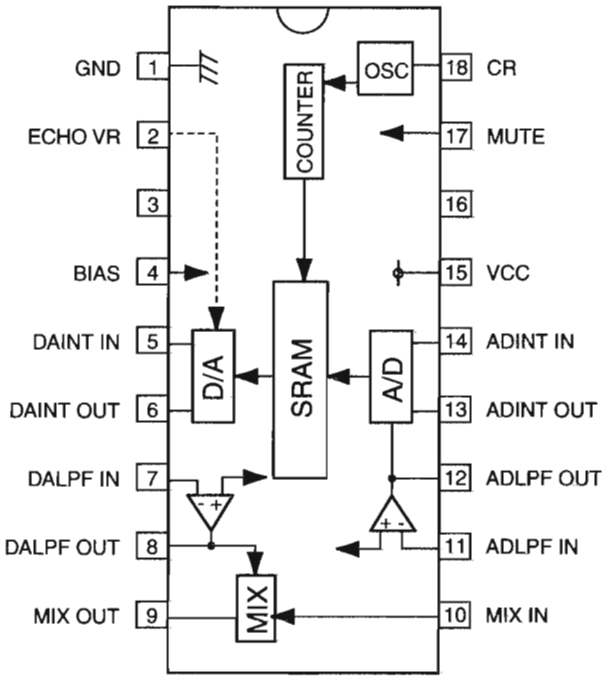

2.Pin function

Pin No.	Symbol	I/O	Descriptions
1	GND	-	Connect GND
2	ECHO VR	I	Echo level control
3		-	Non connect
4	BIAS	-	Analog part DC bias
5	DAINT IN	I	DA side integrator input
6	DAINT OUT	O	DA side integrator output
7	DALPF IN	I	DA side LPF input
8	DALPF OUT	O	DAside LPF output
9	MIX OUT	O	Mix AMP output for original tone& echo tone
10	MIX IN	I	Mix AMP input pin for original tone
11	ADLPF IN	I	AD side LPF input
12	ADLPF OUT	O	AD side LPF output
13	ADINT OUT	O	AD side integrator output
14	ADINT IN	I	AD side integrator input
15	VCC	-	Power supply
16	NC2	-	Non connect
17	MUTE	I	Mute control signal input
18	CR	-	CR pin for oscillator

Block diagrams

■ MAIN/CASSETTE/CD section

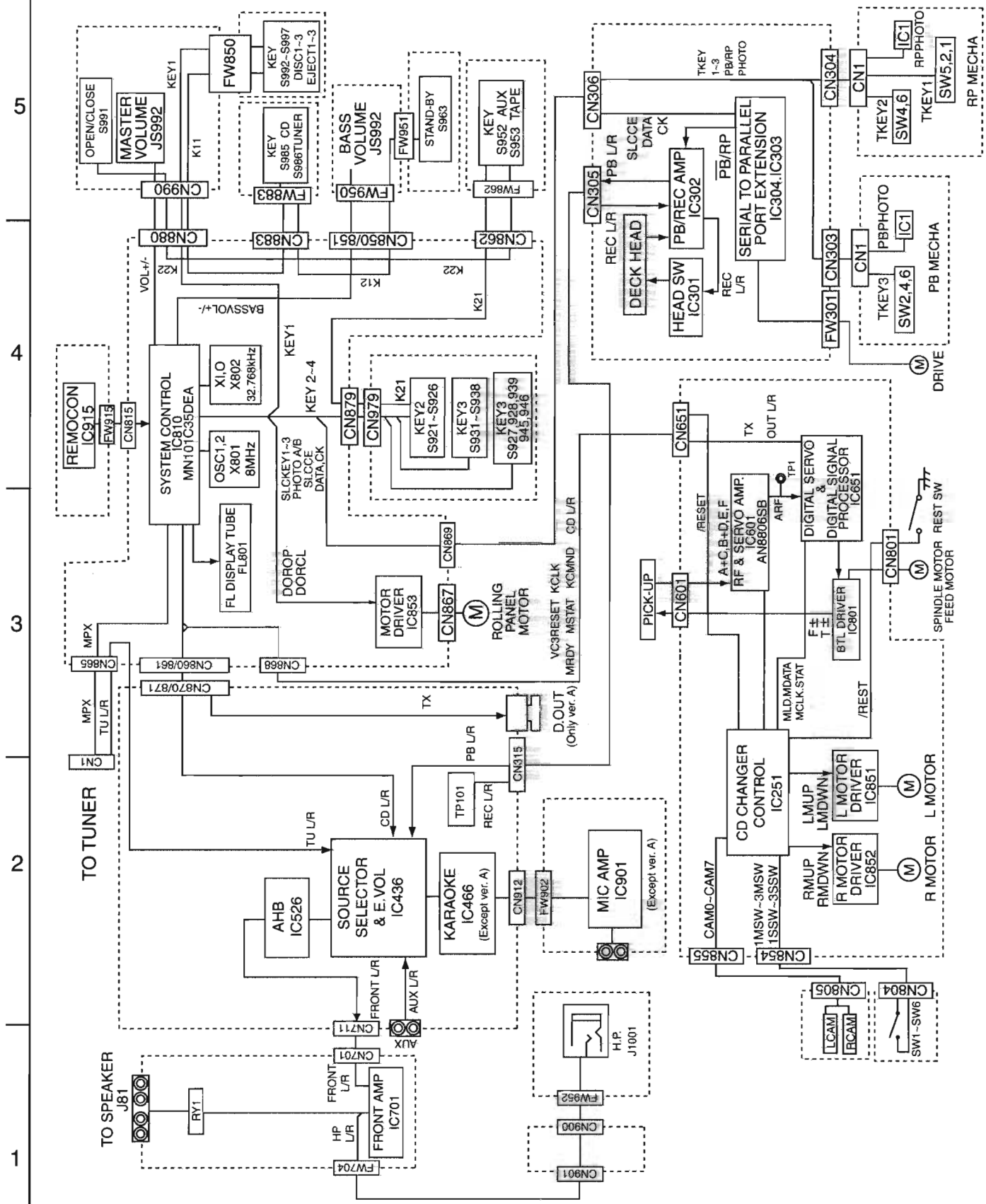

■ TUNER section

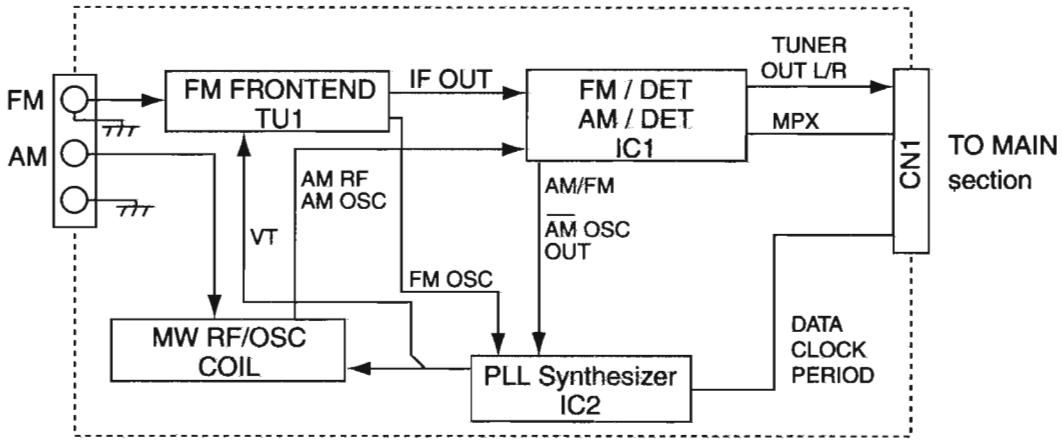

Standard schematic diagrams

Power transformer section

POWER SUPPLY BLOCK

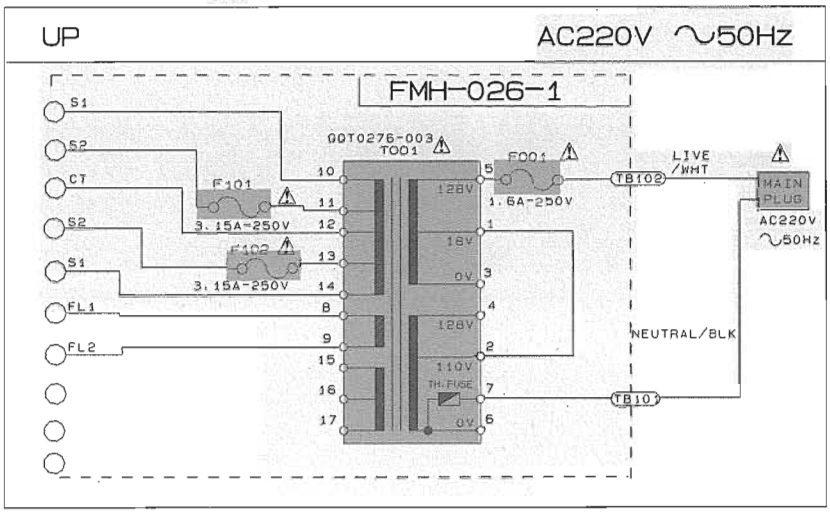

POWER SUPPLY BLOCK

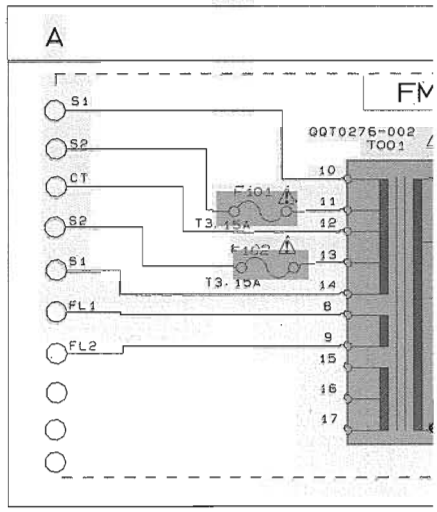

POWER SUPPLY BLOCK

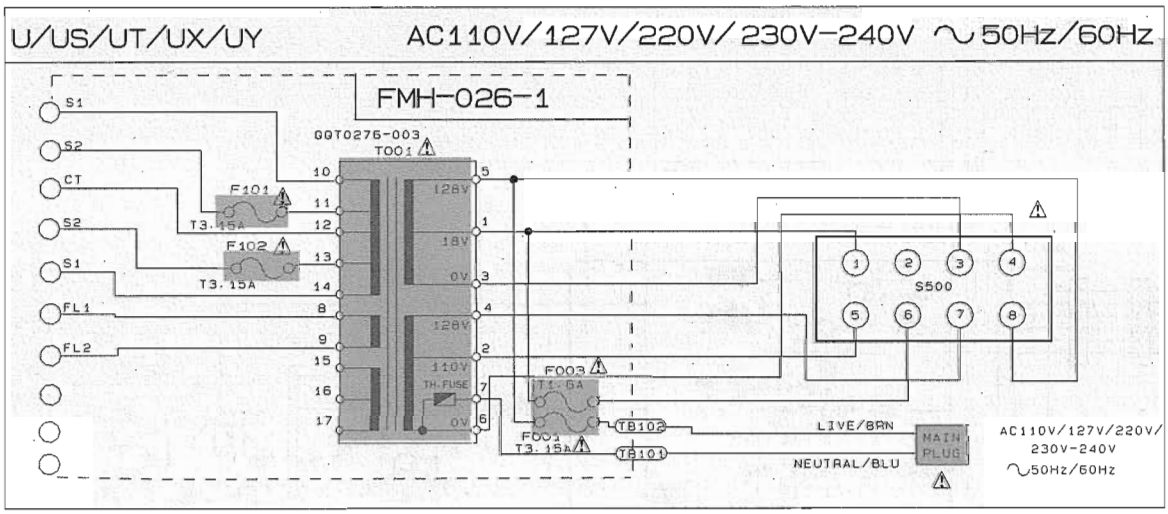

VOLTAGE SELECTOR LOCATION

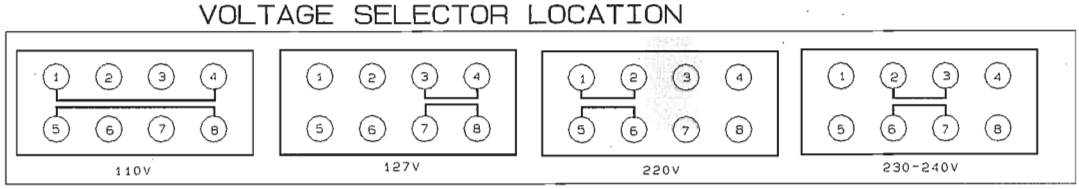

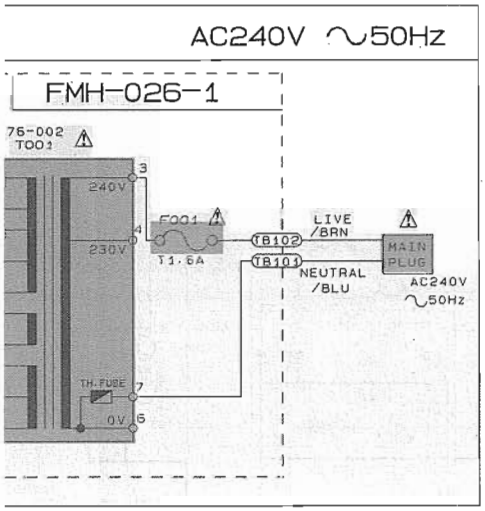

EXPLANATION OF OVERALL OF SCHEMA.

MODEL MX-J500

SHEET NUMBER	MODEL NUMBERS TO BE APPLIED	CIRCUITS DESCRIPTION
1/9	MX-J500	.PRIMARY WITH MAINS TRANSFORMER
2/9	MX-J500	.DC REGULATORS/AUDIO OUTPUT
3/9	MX-J500	.EXTERNAL INPUT. SOURCE SELECTOR SWITCH
4/9	MX-J500	.TUNER RF/IF/FM MULTIPLEX (ONLY FOR U. UP. US. UT. UX. UY)
5/9	MX-J500	.TUNER RF/IF/FM MULTIPLEX (ONLY FOR A)
6/9	MX-J500	.FL DISPLAY. SYSTEM CONTROL LSI. USER CONTROL KEYS
7/9	MX-J500	.TAPE DECK MECHANISM CONTROL .TAPE CIRCUITS SUCH AS PRE-AMP AND BIAS
8/9	MX-J550	.CD SERVO AND CD SYSTEM CONTROL .CD CHANGER MECHANISM CONTROL
9/9	MX-J500	.MIC·AMP. ECHO CIRCUIT (ONLY FOR U. UP. US. UT. UX. UY)

VERSION CODES

A : AUSTRALIA
UP : KOREA
US : SINGAPORE
UT : TAIWAN
UX : SAUDI ARABIA
UY : ARGENTINA
U : UNIVERSIAL EXCEPT ALL OF ABOVES

⚠ Parts are safety assurance parts. When replacing those parts make sure to use the specified.

SHEET 1/9

Power amplifier & regulator section

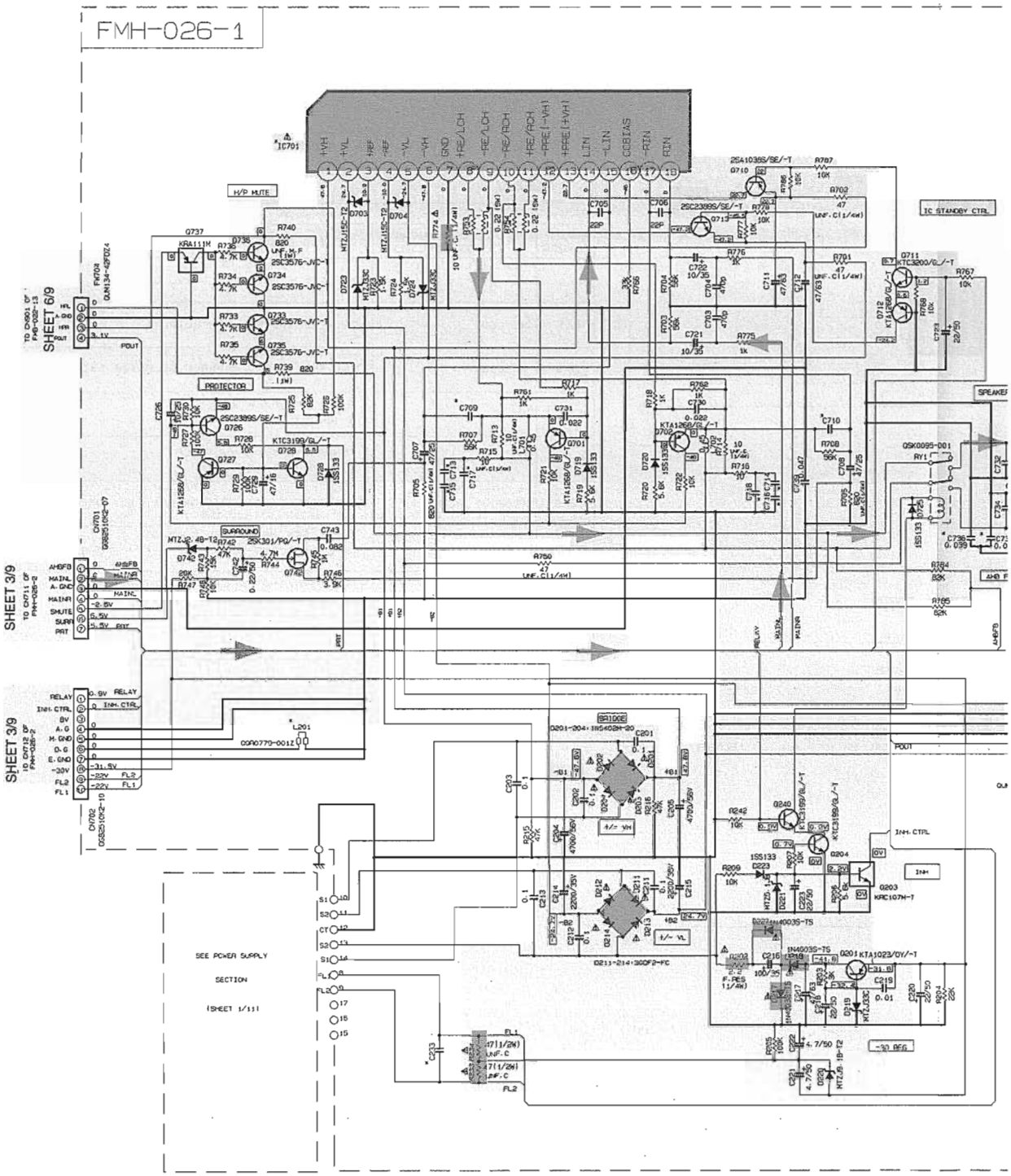

NOTES

1. VOLTAGES ARE DC-MEASURED WITH A DIGITAL VOLT METER OR OSCILLOSCOPE WITHOUT INPUT SIGNAL.
   CONDITION ---- AUX MODE. VOL MIN. BASS OFF
2. UNLESS OTHERWISE SPECIFIED
   RESISTORS ARE 1/4W ±5% CARBON RESISTOR.
   ALL RESISTANCE VALUES ARE IN OHM(Ω).
   ALL CAPACITORS ARE CERAMIC CAPACITOR OR MYLAR CAPACITOR.
   ALL CAPACITANCE VALUES ARE IN μF(P=pF).
   ALL INDUCTANCE VALUES ARE IN μH(mμH).
   ALL E-CAPACITORS ARE SHOWN IN THE FORM OF CAPACITANCE (μF)/RATED VOLTAGE (V).
   ALL DIODES ARE 1SS133

→ **MAIN signal**

*MARK

REF. NAME / VERSION	MX-J500	
	U, UP, US UX, UY	UT, A
C713, C714, C715, C716	0.047	0.047
C717, C718	NONE	NONE
R392, R393	SHORT B81, B82	SHORT B81, B82
R383	SHORT B84	SHORT B84
R360	2.2 (1/4W) F.RES	2.2 (1/4W) F.RES
R361	4.7 (1/4W) F.RES	4.7 (1/4W) F.RES
C233	0.22	0.01
C736/C737	NONE	USED
R395/R396	USED	USED
R373/R374	NONE	NONE
IC701	STK412-000	STK412-000
L201	SHORT(B112)	USED
C709/C710	10P	4.7P

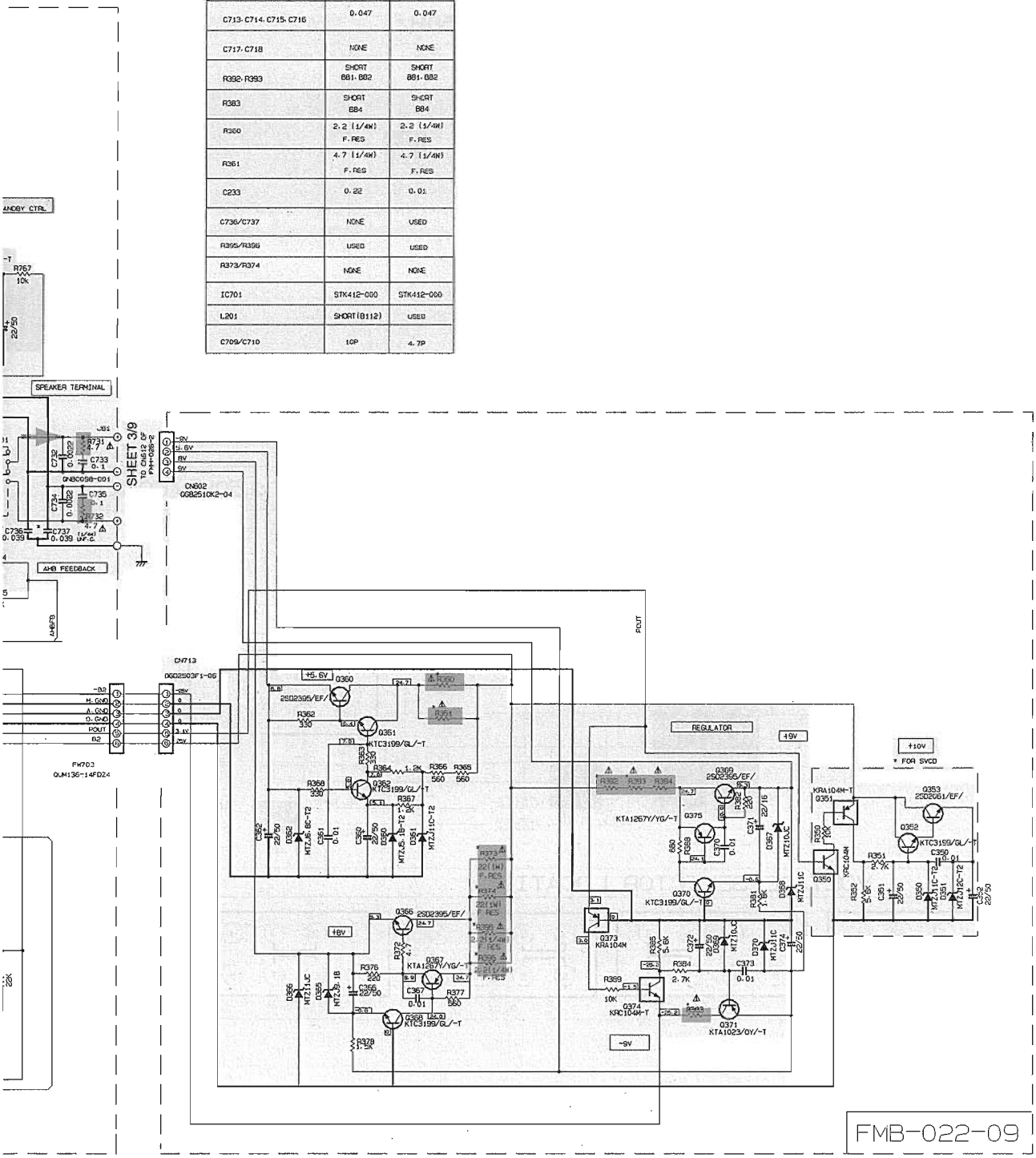

ignal

⚠ Parts are safety assurance parts. When replacing those parts make sure to use the specified.

SHEET 2/9

D E F G H

Function & main amplifier section

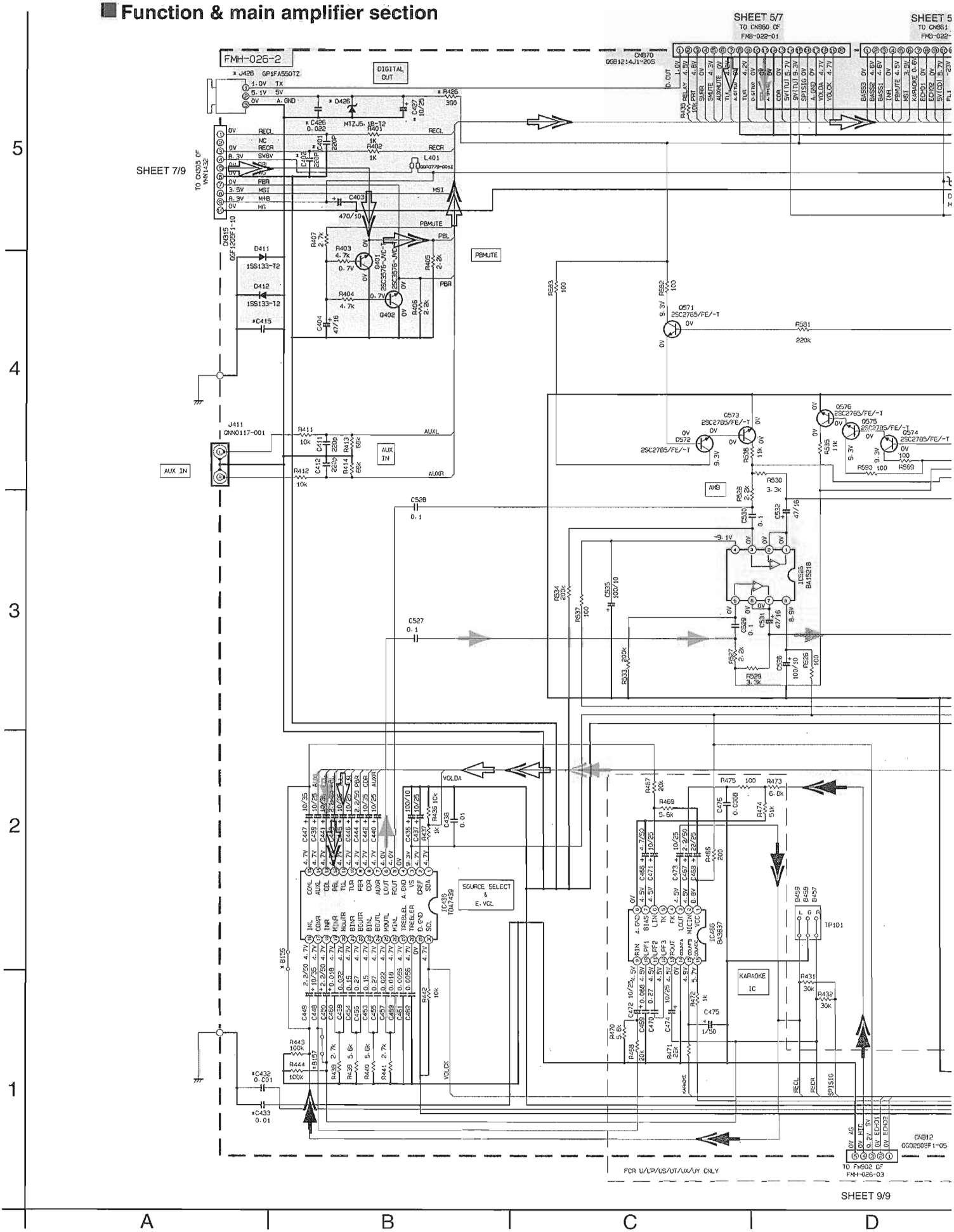

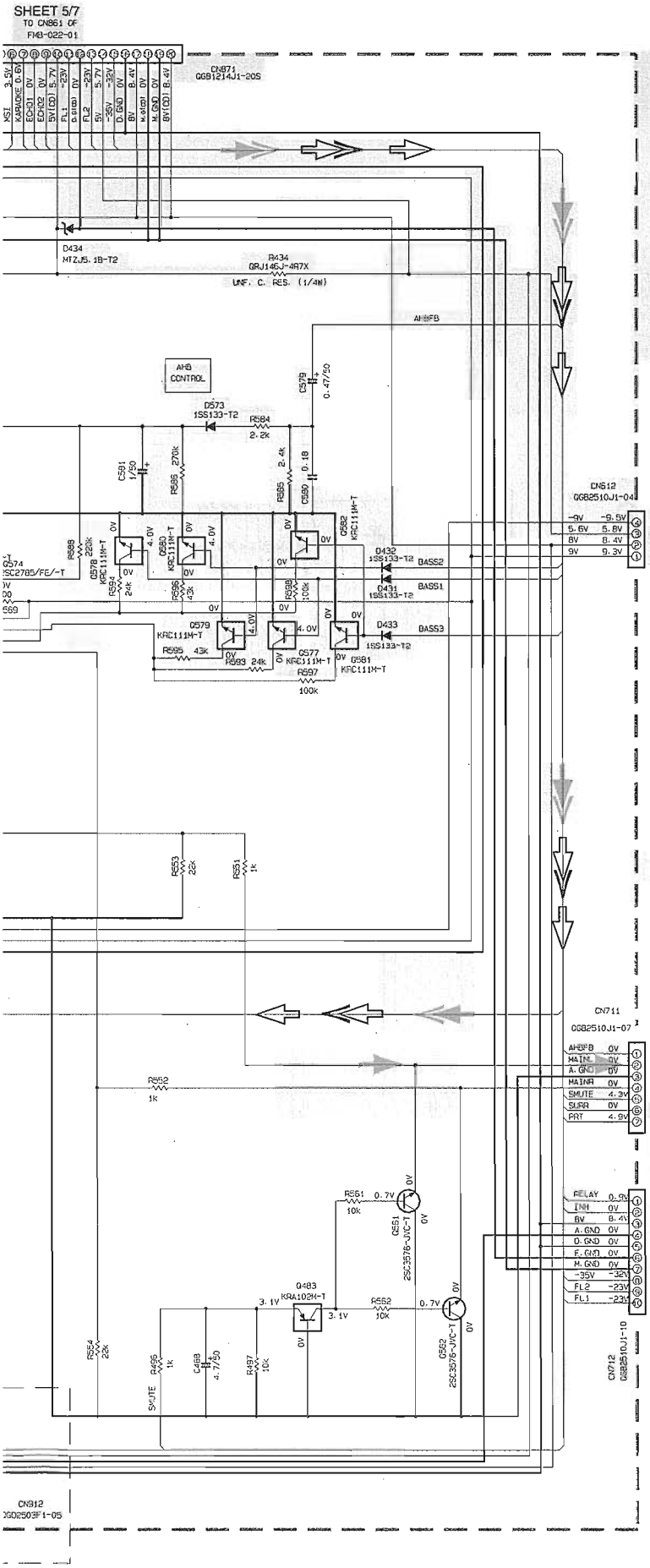

* MARK

	MODEL	MX-J500		
	VERSION	A	U, UP U.S. UX UY	UT
DIGITAL OUT	C426	USED	NONE	NONE
	C427	USED	NONE	NONE
	D426	USED	NONE	NONE
	J426	USED	NONE	NONE
	R426	USED	NONE	NONE
EMC	C401	USED	NONE	USED
	C402	USED	NONE	USED
	C415	0.0022	1000p	1000p
	C431	USED	NONE	USED
	C432	USED	NONE	USED
	C433	USED	NONE	USED
	L401	USED	SHORT	USED
OTHERS	B156	USED	NONE	NONE
	B157	USED	NONE	NONE

NOTES

1. VOLTAGES ARE DC-MEASURED WITH A DIGITAL VOLT METER OR OSCILLOSCOPE WITHOUT INPUT SIGNAL.
   CONDITION --- AUX MODE, VOL MIN, BASS OFF
2. UNLESS OTHERWISE SPECIFIED
   RESISTORS ARE 1/4W ±5% CARBON RESISTOR.
   ALL RESISTANCE VALUES ARE IN OHM(Ω).
   ALL CAPACITORS ARE CERAMIC CAPACITOR OR MYLAR CAPACITOR.
   ALL CAPACITANCE VALUES ARE IN μF(=pF).
   ALL INDUCTANCE VALUES ARE IN μH(=mH).
   ALL E.CAPACITORS ARE SHOWN IN THE FORM OF CAPACITANCE (μF)/RATED VOLTAGE (V).
   ALL DIODES ARE 1SS133

MAIN signal

CD signal

TAPE P.B. signal

TUNER signal

MIC signal

SHEET 3/9

Tuner selection (Only ver. U. US. UX. UP. UY. UT)

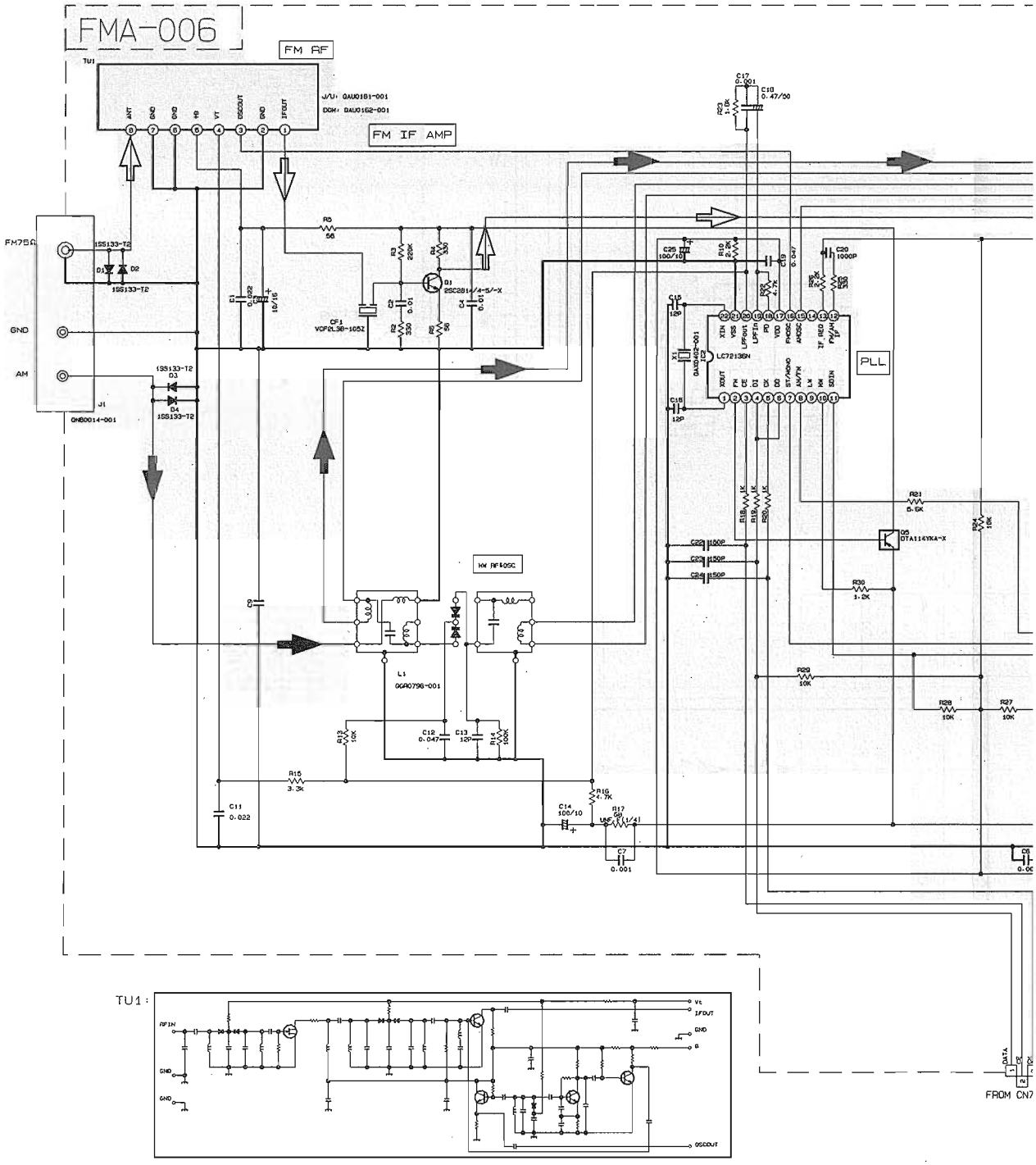

TU1 :

	CONDITION PIN NO.	1	2	3	4	5	6	7	8	9	10	11	12	13	14	15	16	17	18	19	20	21	22	23	24	25	26	27
IC1	FM NO SIGNAL	3.6	8.9	3.6	3.6	0	5.0	5.0	8.9	8.9	1.3	0.1	0	0.9	7.8	7.8	4.3	4.3	4.3	4.3	3.4	3.4	2.8	3.4	0	0	3.5	3.5
	FM 60dB STEREO	3.6	8.9	3.6	3.6	0	0	5.0	8.9	8.9	1.3	4.3	0	0.9	7.8	7.8	4.3	4.3	4.3	4.3	3.4	3.4	2.8	3.4	0	0	3.6	3.6
	AM NO SIGNAL	3.5	9.0	3.5	3.5	0	5.0	5.1	9.0	2.6	1.3	0	0	0.9	4.7	5.5	4.3	4.3	4.3	4.3	3.3	3.2	2.8	ust	0.7	0.7	3.6	3.6
IC2	FM NO SIGNAL	2.5	0	0	5.0	4.9	5.0	7.9	7.8	3.6	6.1	5.1	0	0	0	0	2.5	5.1	0.9	0.9	3.8	0	2.3					

NOTES

1. VOLTAGES ARE DC-MEASURED WITH A DIGITAL VOLT METER.
2. ALL RESISTORS ARE 1/8W ±5% METAL GLAZE RESISTOR.
3. ALL RESISTANCE VALUES ARE IN OHM(Ω).
4. ALL CAPASITANCE VALUES ARE IN μF(P=pF).
5. ALL E.CAPASITORS ARE SHOWN IN THE FORM OF CAPASITANCE (μF)/RATED VOLTAGE (V).
6. SI DIODES (▶|) ARE ALL 1SS133-T THAT CAN BE CHANGED TO SIMILAR DIODE SUCH AS MA165 OR HSS104J.
7. PARTS NO. OF TRANSISTORS ARE AS FOLLOWS.
   Q1 2SC2814/4-5/-X Q2.Q3 2SC2412K/R/-X
   Q4.Q5 DTA114YKA-X
8. INSIDE OF DIGITAL TRANSISTORS ARE SHOWN AS FOLLOWS.

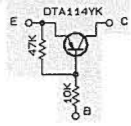

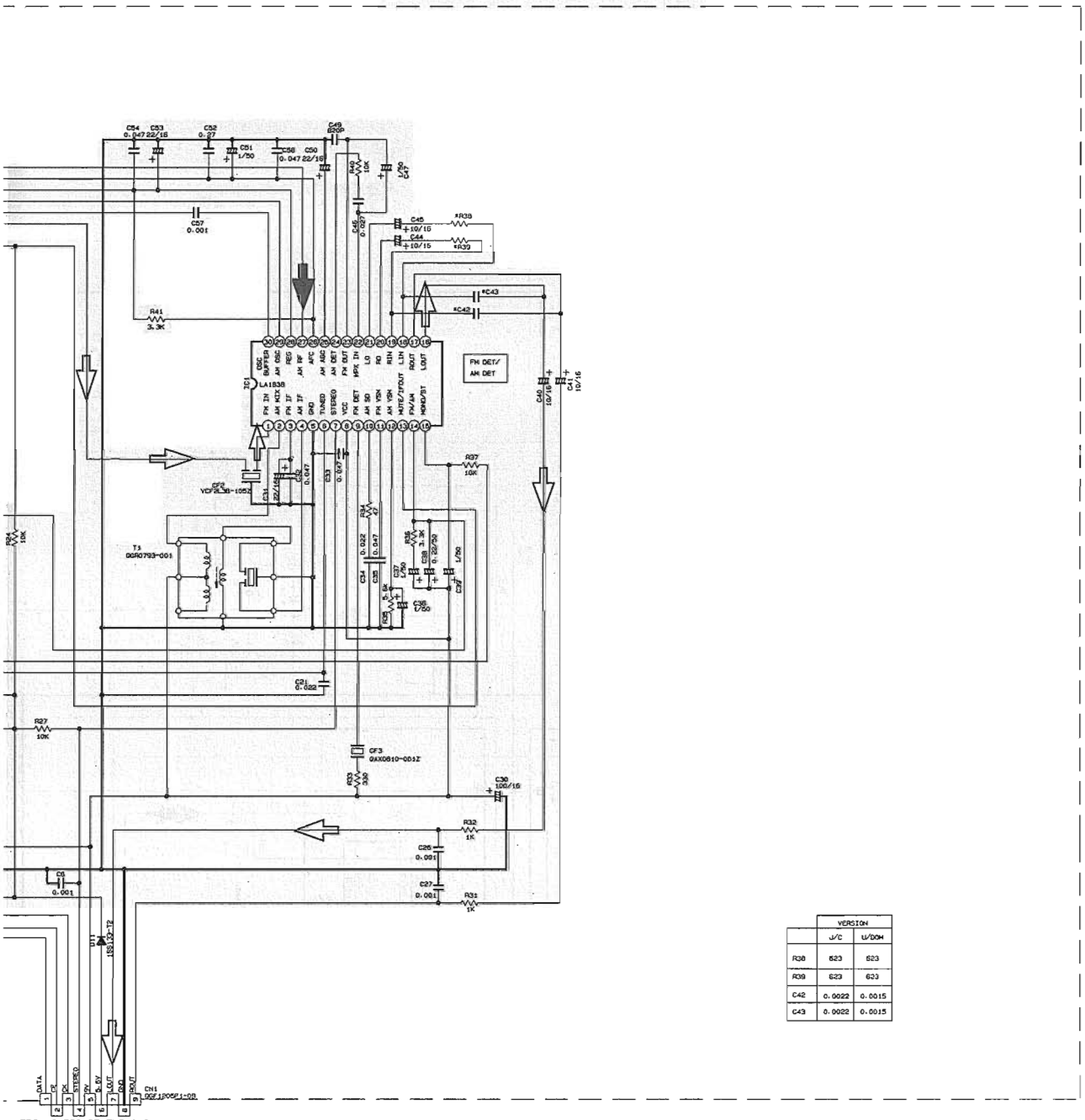

	VERSION	
	J/C	U/DOM
R38	623	623
R39	623	623
C42	0.0022	0.0015
C43	0.0022	0.0015

SHEET 6/9

	26	27	28	29	30
	3.5	3.5	3.6	3.6	2.7
	3.6	3.6	3.6	3.6	2.7
	3.6	3.6	3.6	3.6	2.1

Tr NO.	Q1			Q5					
PIN NO.	E	C	B	E	C	B			
FM 87.5MHz NO SIGNAL	0	7.1	0.85	8.9	8.8	0			
AM 522KHz NO SIGNAL	0	0	0	9.0	0	8.9			
Tr NO.	Q2			Q3			Q4		
PIN NO.	E	C	B	E	C	B	E	C	B
AM 522KHz NO SIGNAL	0	0	0.7	0	0	0.7	0	3.6	0.7
AM 144KHz NO SIGNAL	0	0	0.3	0	0.3	0.3	3.6	3.6	3.6

⇨ FM/TUNER signal

➡ AM signal

SHEET 4/9

D | E | F | G | H

Tuner selection (Only Ver. A)

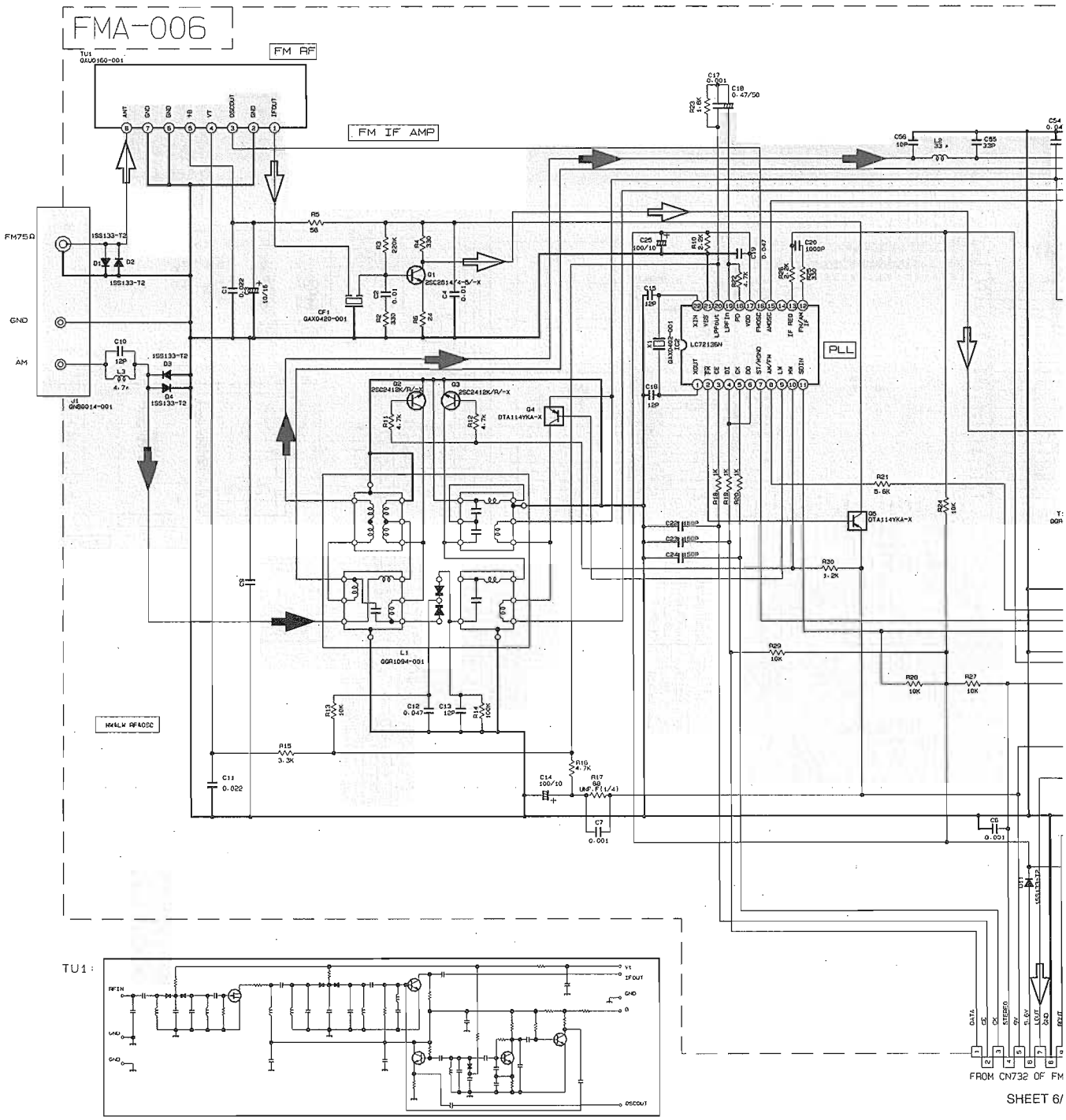

	CONDITION PIN NO.	1	2	3	4	5	6	7	8	9	10	11	12	13	14	15	16	17	18	19	20	21	22	23	24	25	26	27	28	29	30
IC1	FM NO SIGNAL	3.6	8.9	3.6	3.6	0	5.0	5.0	8.9	8.9	1.3	0.1	0	0.9	7.8	7.8	4.3	4.3	4.3	4.3	3.4	3.4	2.8	3.4	0	0	3.5	3.5	3.6	3.6	2.7
	FM 60dB STEREO	3.6	8.9	3.6	3.6	0	0	5.0	8.9	8.9	1.3	4.3	0	0.9	7.8	7.8	4.3	4.3	4.3	4.3	3.4	3.4	2.8	3.4	0	0	3.6	3.6	3.6	3.6	2.7
	AM NO SIGNAL	3.5	9.0	3.5	3.5	0	5.0	5.1	9.0	2.6	1.3	0	0	0.9	4.7	5.5	4.3	4.3	4.3	4.3	3.3	3.2	2.8	ust	0.7	0.7	3.6	3.6	3.6	3.6	2.1
IC2	FM NO SIGNAL	2.5	0	0	5.0	4.9	5.0	7.9	7.8	3.6	6.1	5.1	0	0	0	0	2.5	5.1	0.9	0.9	3.8	0	2.3								

NOTES

1. VOLTAGES ARE DC-MEASURED WITH A DIGITAL VOLT METER.
2. ALL RESISTORS ARE 1/6W ±5% METAL GLAZE RESISTOR.
3. ALL RESISTANCE VALUES ARE IN OHM(Ω).
4. ALL CAPASITANCE VALUES ARE IN μF(P=pF).
5. ALL E.CAPASITORS ARE SHOWN IN THE FORM OF CAPASITANCE (μF)/RATED VOLTAGE (V).
6. SI DIODES (▶) ARE ALL 1SS133-T THAT CAN BE CHANGED TO SIMILAR DIODE SUCH AS MA165 OR HSS104J.
7. PARTS NO. OF TRANSISTORS ARE AS FOLLOWS.
   Q1 2SC2814/4-5/-X Q2.Q3 2SC2412K/R/-X
   Q4.Q5 DTA114YKA-X
8. INSIDE OF DIGITAL TRANSISTORS ARE SHOWN AS FOLLOWS.

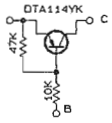

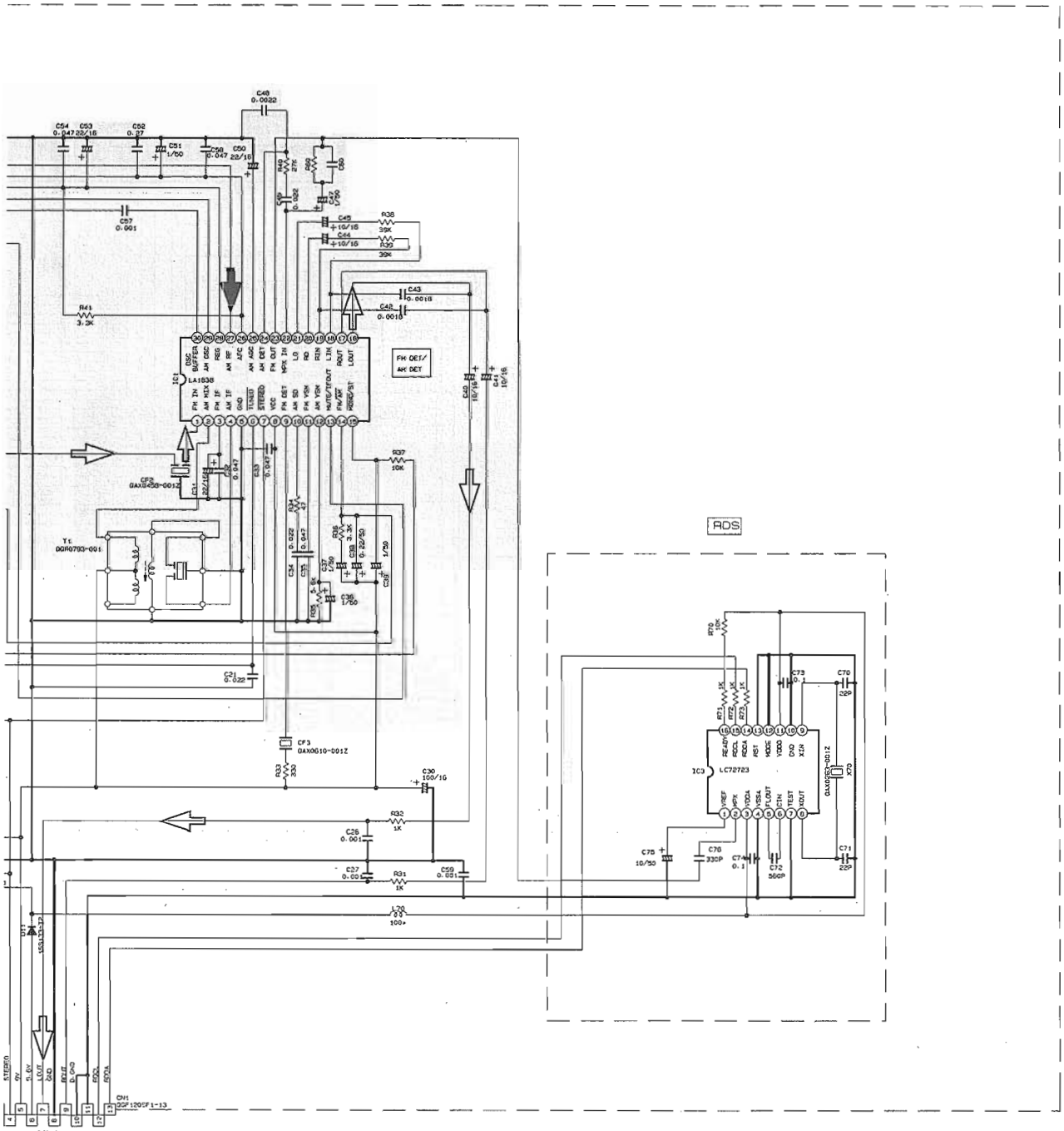

SHEET 6/9

Tr NO.	Q1			Q5					
PIN NO.	E	C	B	E	C	B			
FM 87.5MHz NO SIGNAL	0	7.1	0.85	8.9	8.8	0			
AM 522KHz NO SIGNAL	0	0	0	9.0	0	8.9			
Tr NO.	Q2			Q3			Q4		
PIN NO.	E	C	B	E	C	B	E	C	B
AM 522KHz NO SIGNAL	0	0	0.7	0	0	0.7	0	3.6	0.7
AM 144KHz NO SIGNAL	0	0	0.3	0	0.3	0.3	3.6	3.6	3.6

30
2.7
2.7
2.1

FM/TUNER signal

AM signal

SHEET 5/9

FL Display & system controller selection

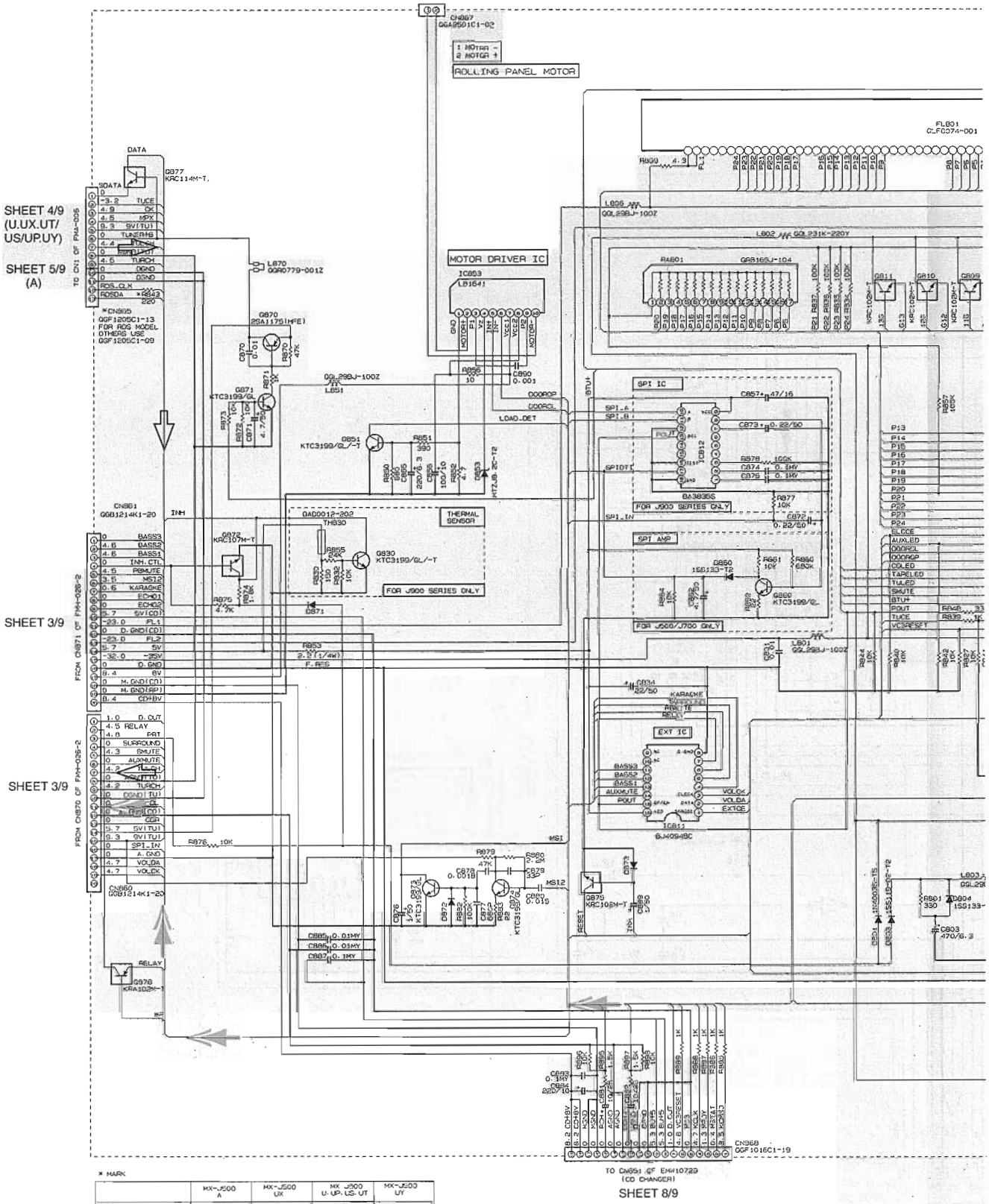

	MX-J500 A	MX-J500 UX	MX-J500 U, UP, US, UT	MX-J500 UY
R814	330K	330K	330K	330K
R831	75K	75K	75K	75K
R833	330K	18K	75K	75K
R834	330K	18K	330K	18K
C840, C842, C851, C880Y	NONE	NONE	NONE	NONE
C852, C854, C859, C863	NONE	NONE	NONE	NONE
R880, R837, R838, R839	NONE	NONE	NONE	NONE
C890, C891	NONE	NONE	NONE	NONE
C841, C842, C843, C844	NONE	NONE	NONE	NONE
L1001, L1002	GQ..231K-470Y	SHORT	SHORT	SHORT
C1001, C1002	3300P	NONE	NONE	NONE
L1003	GQF0779-001Z	GQ..231K-220Y	GQ..231K-220Y	GQ..231K-220Y
R825, R826	NONE	NONE	NONE	NONE
R843	NONE	NONE	NONE	NONE
X801	DAX0416-001Z	DAX0416-001Z	DAX0416-001Z	DAX0416-001Z

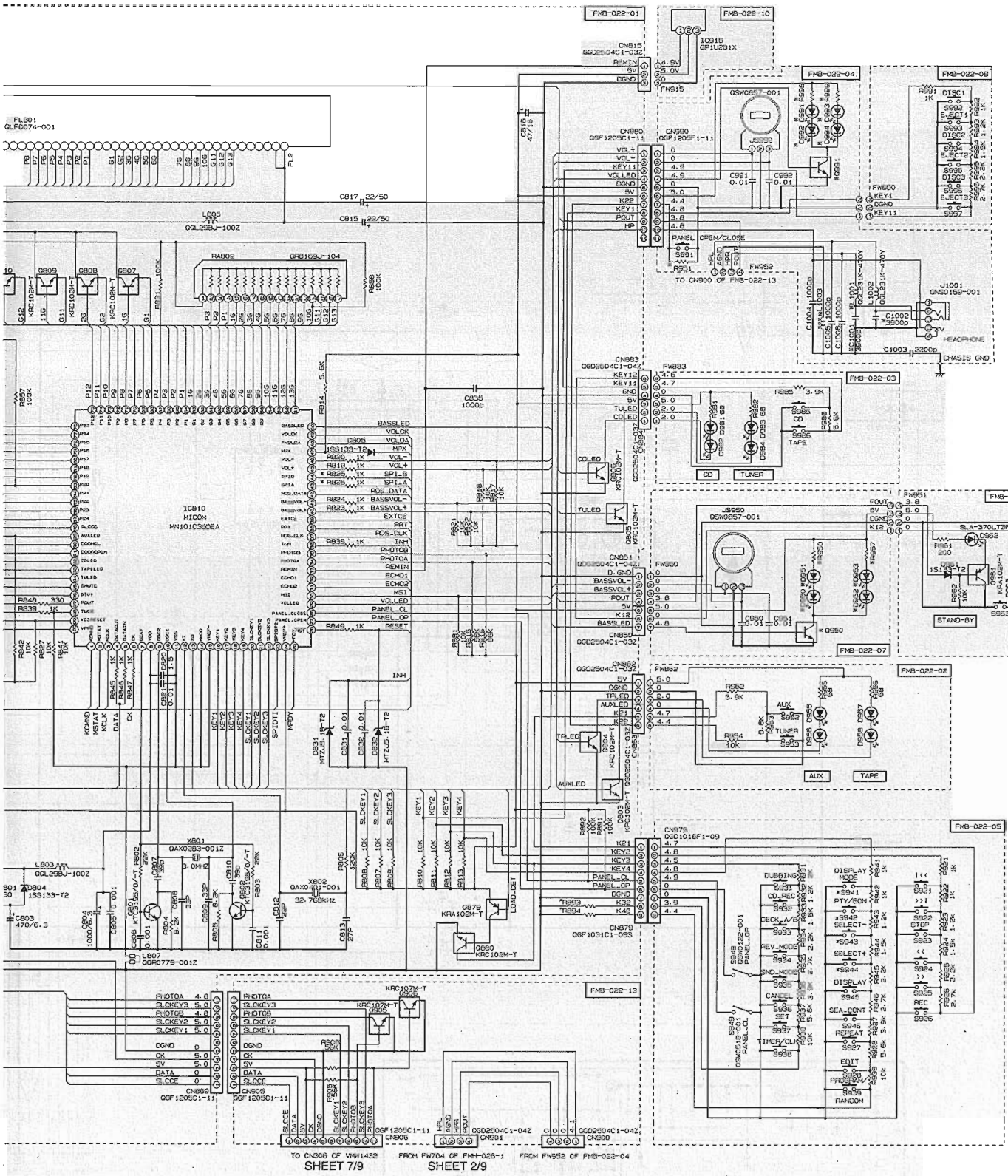

NOTES

1. VOLTAGES ARE DC-MEASURED WITH A DIGITAL VOLT METER OR OSCILLOSCOPE WITHOUT INPUT SIGNAL.
   CONDITION --- AUX MODE. VOL MIN. BASS OFF
2. UNLESS OTHERWISE SPECIFIED
   RESISTORS ARE 1/4W ±5% CARBON RESISTOR.
   ALL RESISTANCE VALUES ARE IN OHM(Ω).
   ALL CAPACITORS ARE CERAMIC CAPACITOR OR MYLAR CAPACITOR.
   ALL CAPACITANCE VALUES ARE IN MFD(μF).
   ALL INDUCTANCE VALUES ARE IN MH(mH).
   ALL E-CAPACITORS ARE SHOWN IN THE FORM OF CAPACITANCE (μF)/RATED VOLTAGE (V).
   ALL DIODES ARE 1SS133

⇨ TUNER signal

➡ CD signal

SHEET 6/9

D | E | F | G | H

Head amplifier & mechanismcontrol section

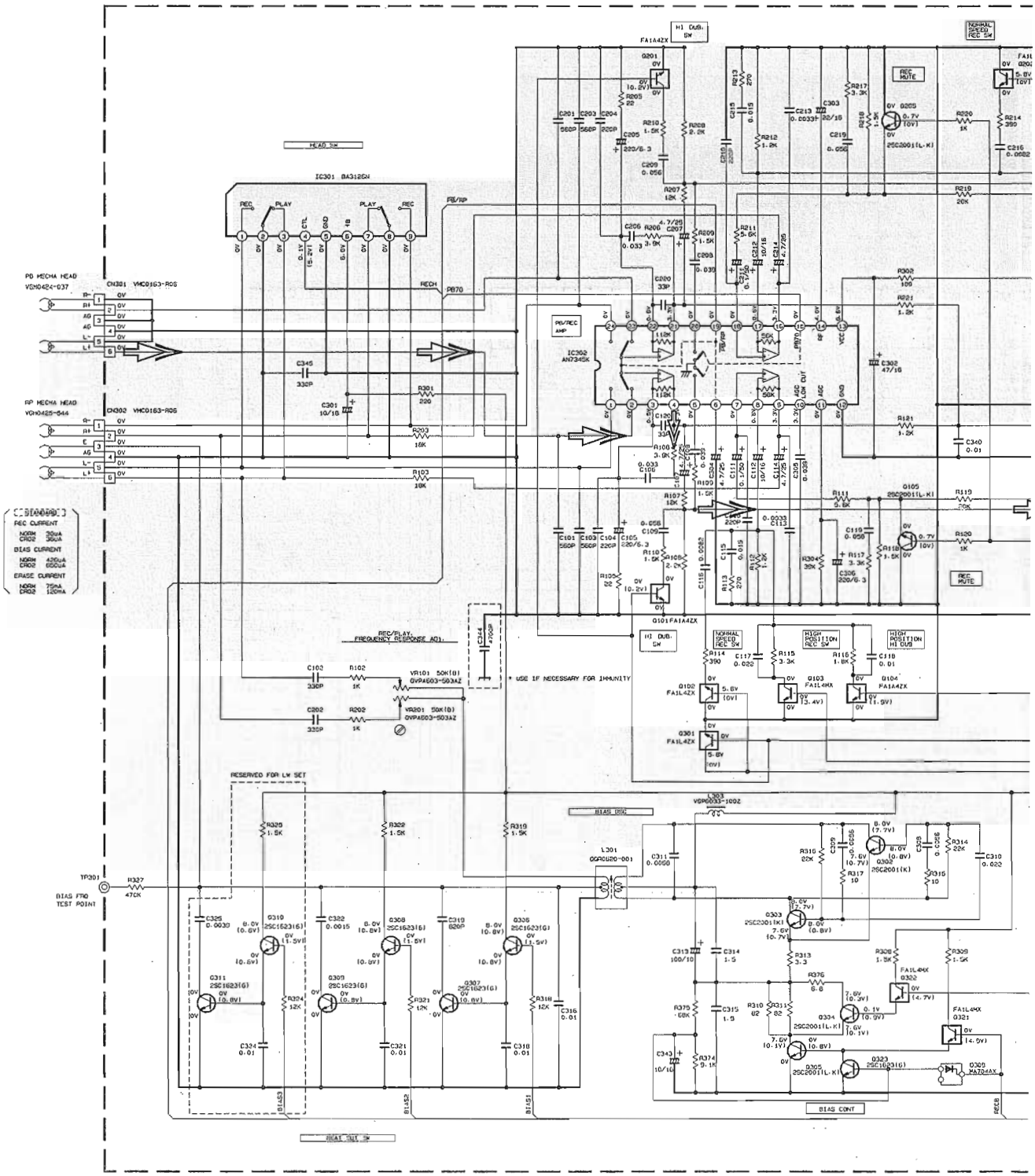

NOTES

1. VOLTAGES ARE DC-MEASURED WITH A DIGITAL VOLT METER OR OSCILLOSCOPE WITHOUT INPUT SIGNAL. ( ) IS INVERT MODE
2. UNLESS OTHERWISE SPECIFIED
   ALL RESISTANCE VALUES ARE IN OHM(Ω).
   ALL CAPACITORS ARE CERAMIC CAPACITOR
   ALL CAPACITANCE VALUES ARE IN μF(P=pF).
   ALL INDUCTANCE VALUES ARE IN μH(m=mH).
   ALL E.CAPACITORS ARE SHOWN IN THE FORM OF CAPACITANCE (μF)/RATED VOLTAGE (V).
   PP PLYPROPYLENE CAPACITOR

TABLE 1. DIGITAL TR LIST

PART NO	CONSTRUCTION	REF. NO			
FN1L4H	47K 47K	Q318	FA1F4H	22K 22K	Q317
FA1A42	10K	Q101/Q201 Q104/Q204	FA1L4H	47K 47K	Q103/Q203 Q319 Q320/Q321/Q32
FA1L42	47K	Q102/Q202 Q301			

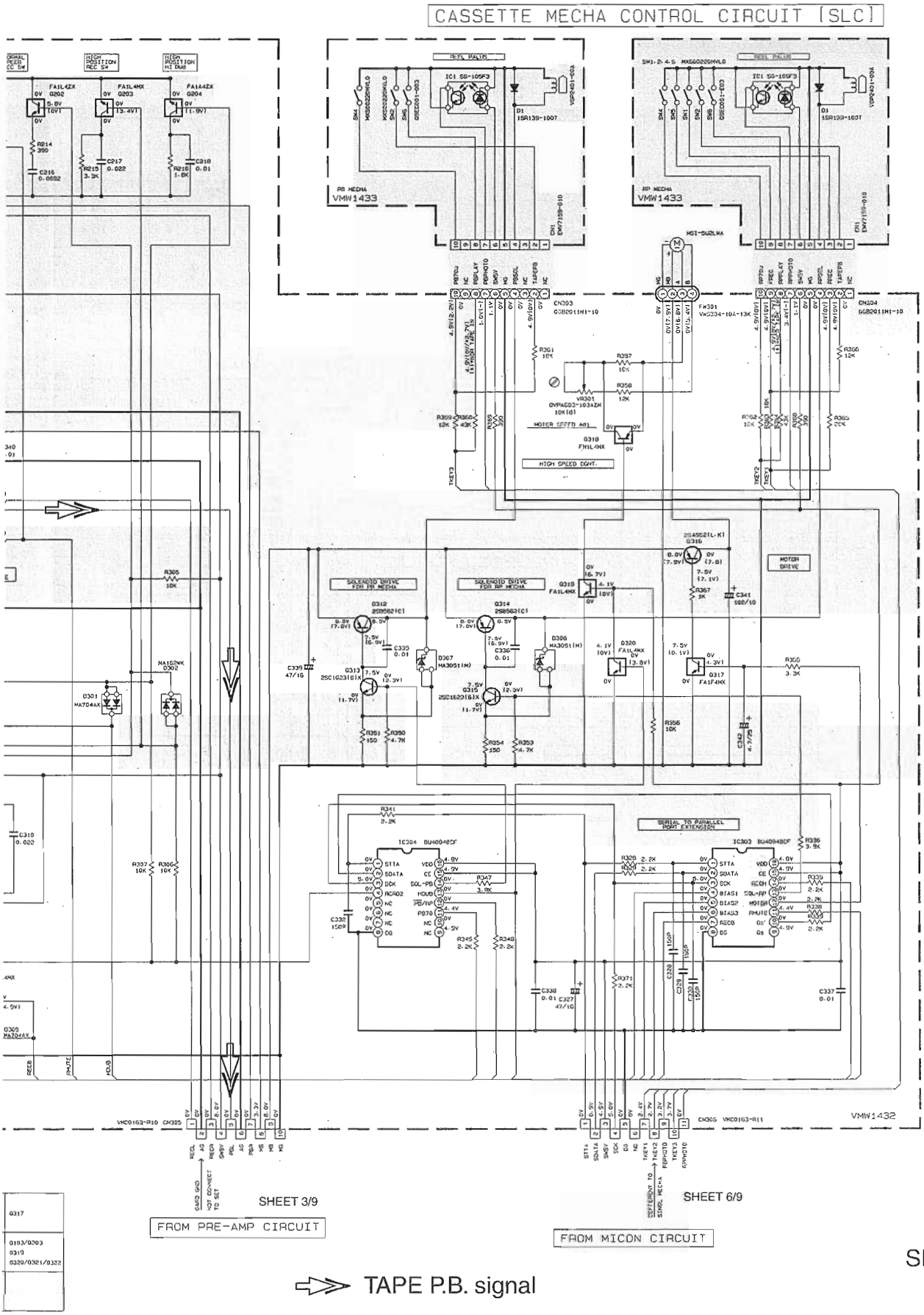

SHEET 7/9

TAPE P.B. signal

CD Servo & CD Mechanism control selection

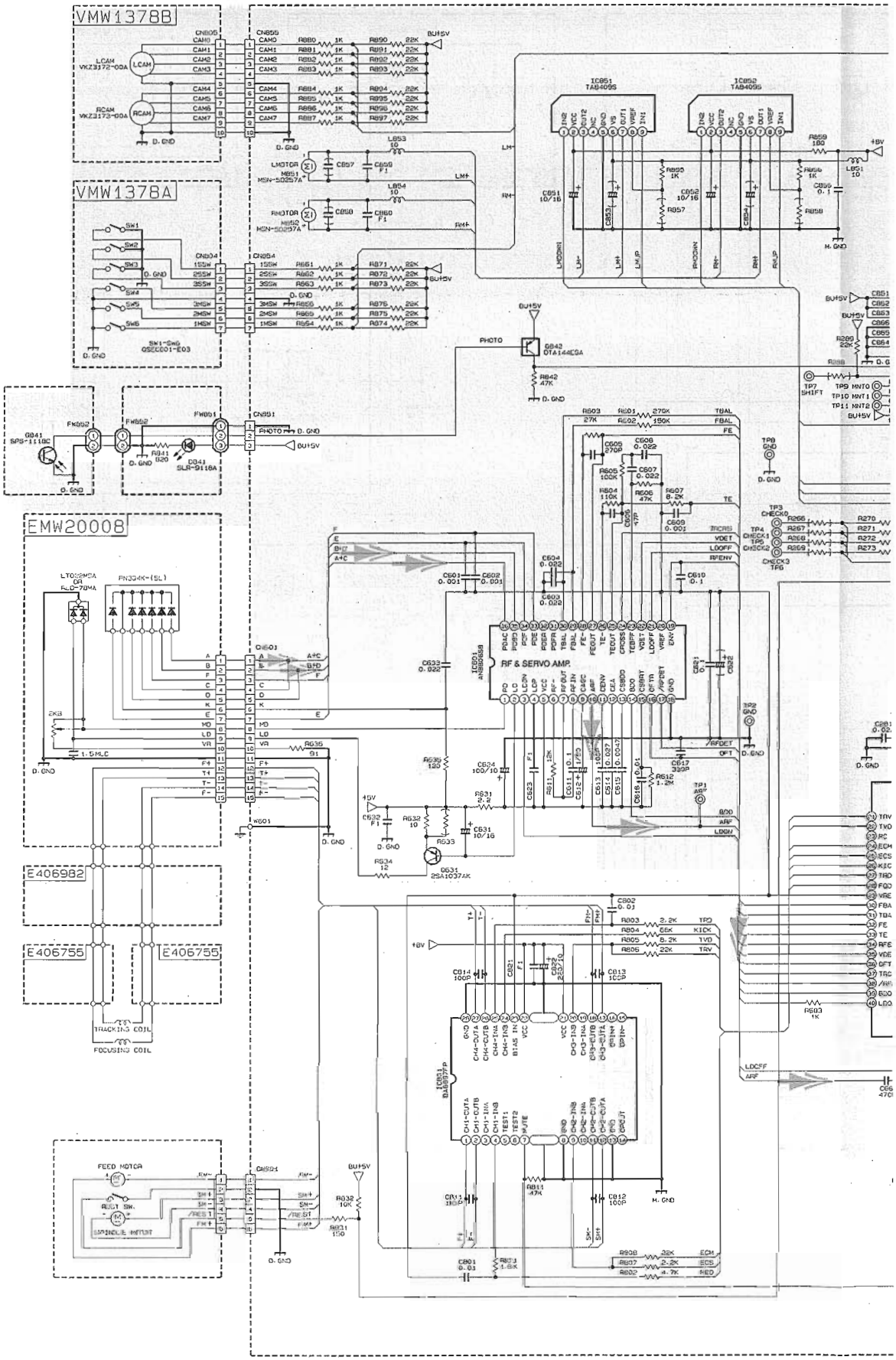

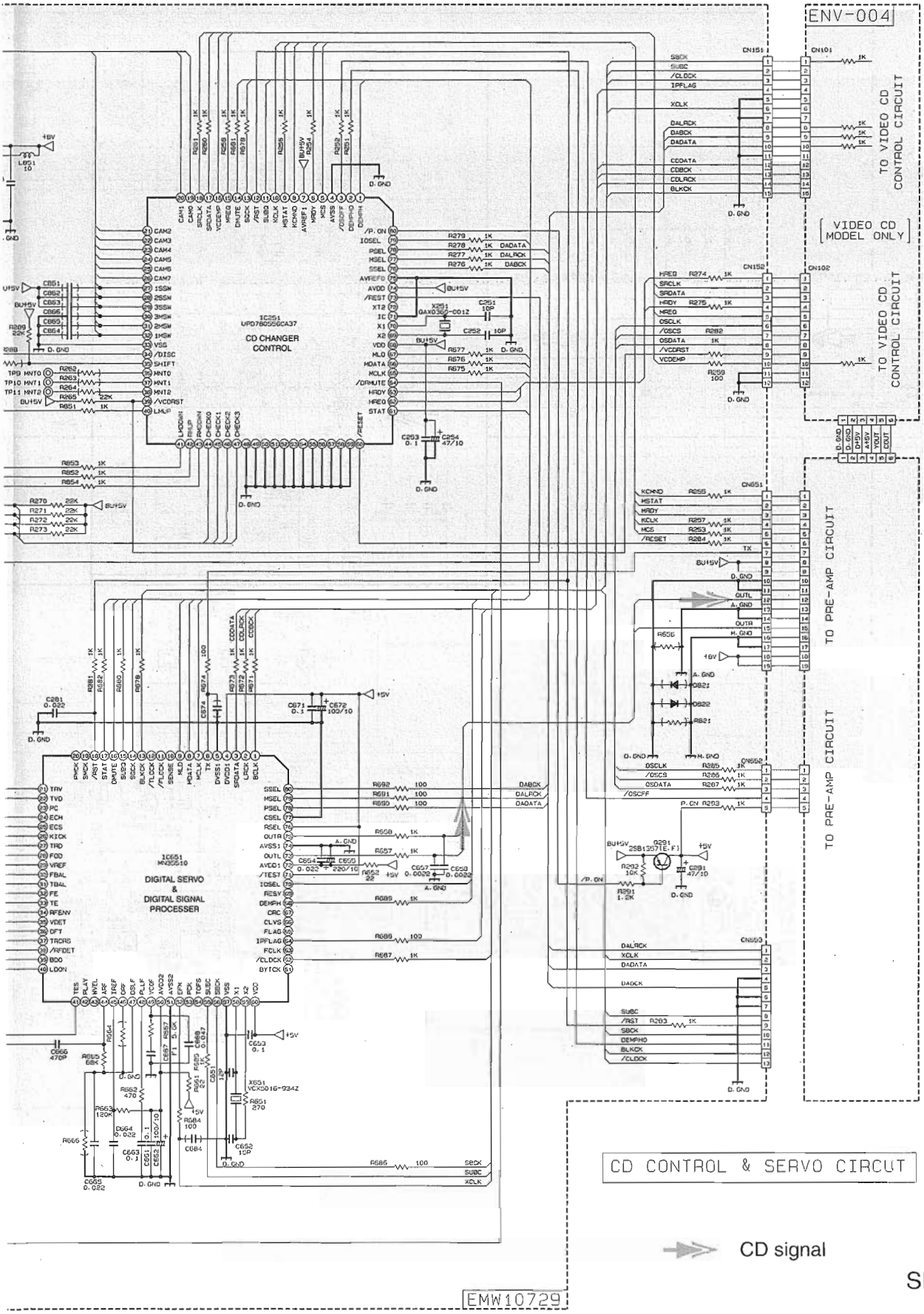

SHEET 8/9

D | E | F | G | H

■ Microphone amplifier section (Only Ver. U. UP. US. UT. UX. UY)

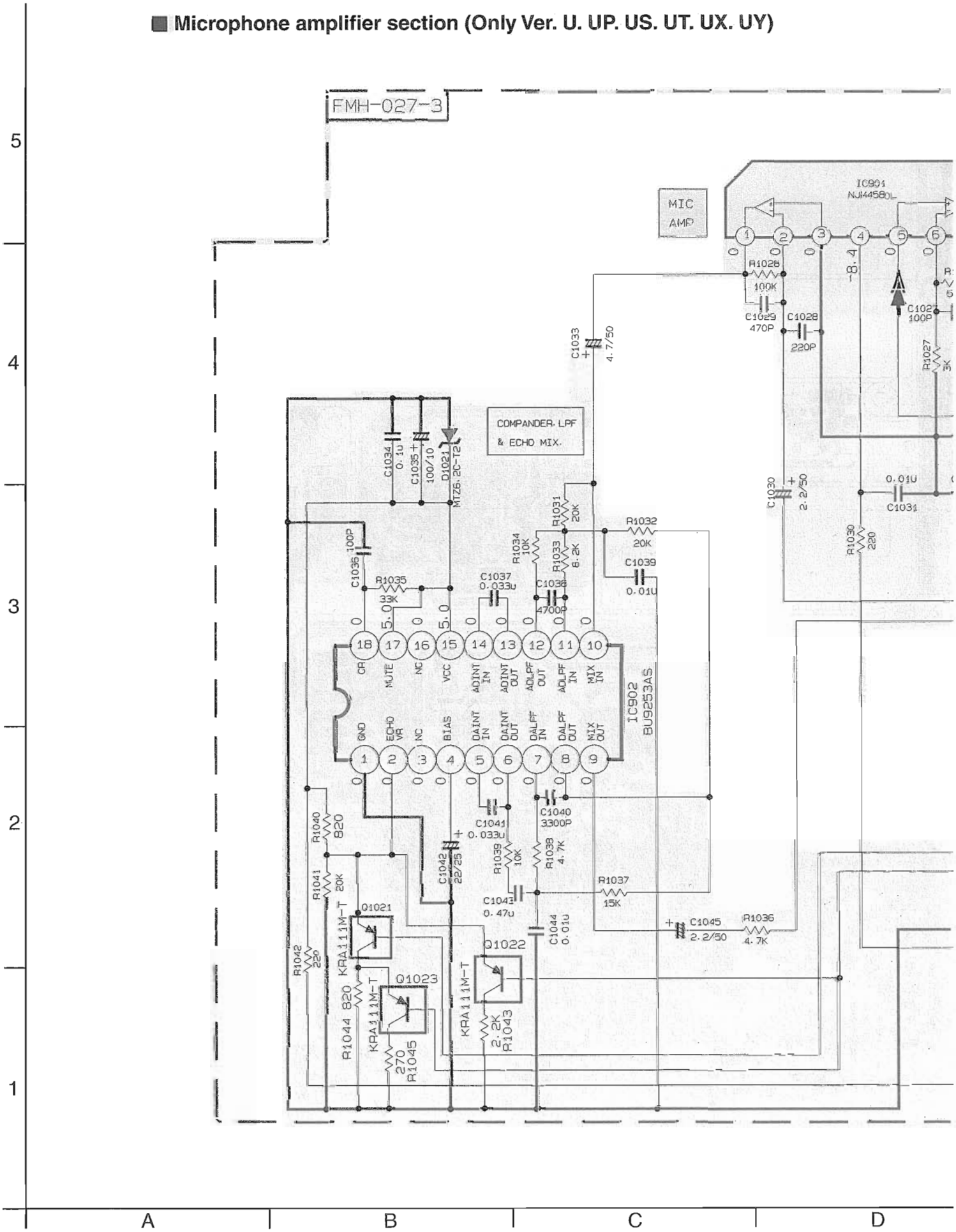

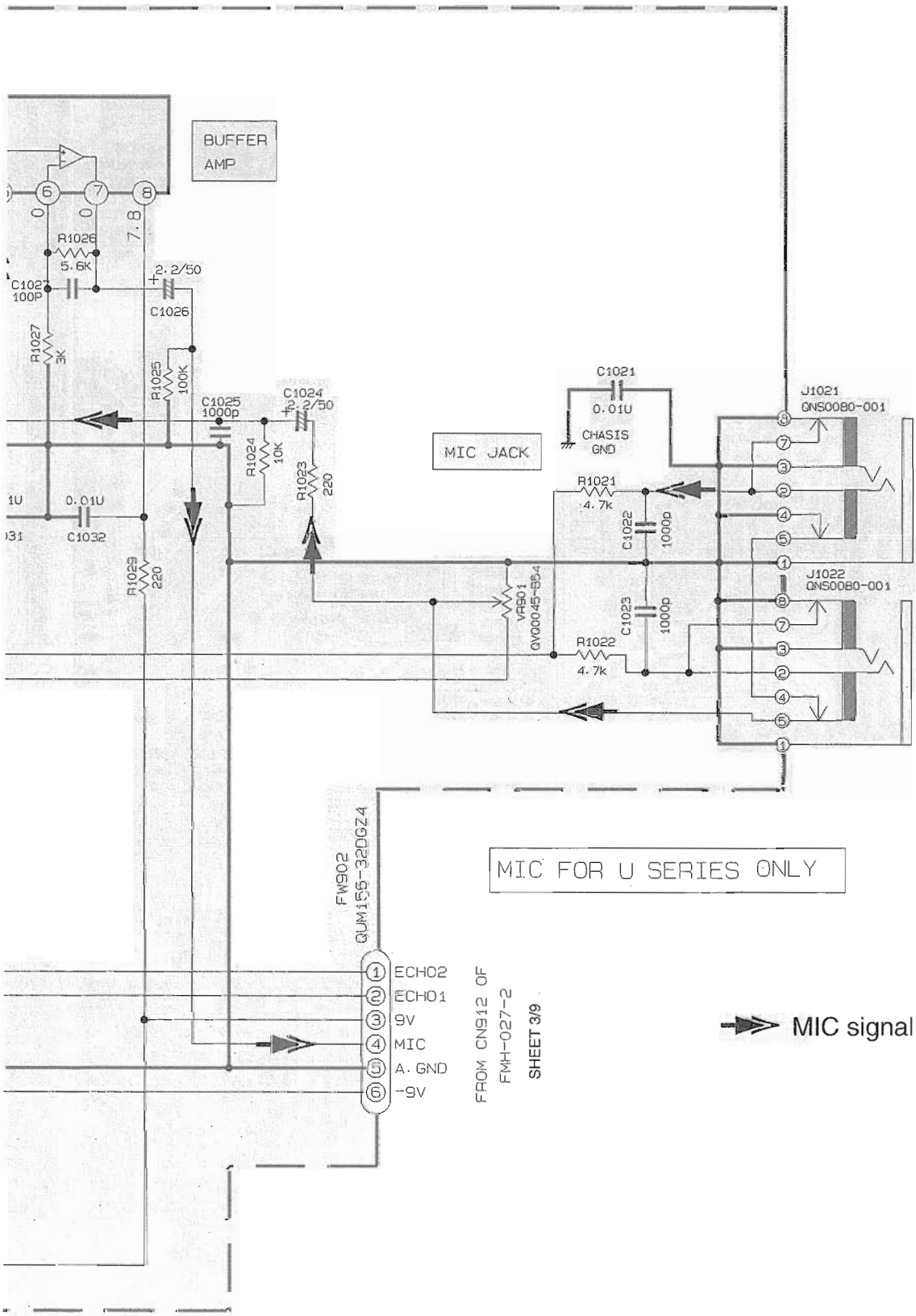
BUFFER AMP
R1026 5.6K
C1027 100P
2.2/50
C1026
R1027 3K
R1025 100K
C1025 1000p
C1024 2.2/50
R1024 10K
R1023 220
0.01U
C1032
R1029 220
C1021 0.01U
CHASIS GND
MIC JACK
R1021 4.7k
C1022 1000p
C1023 1000p
R1022 4.7k
VR901 QV00045-B54
J1021 QNS0080-001
J1022 QNS0080-001
FW902 QUM156-32DGZ4
MIC FOR U SERIES ONLY
ECHO2
ECHO1
9V
MIC
A. GND
-9V
FROM CN912 OF FMH-027-2
SHEET 3/9
MIC signal

SHEET 9/9

Printed circuit boards

Main & preamplifier board

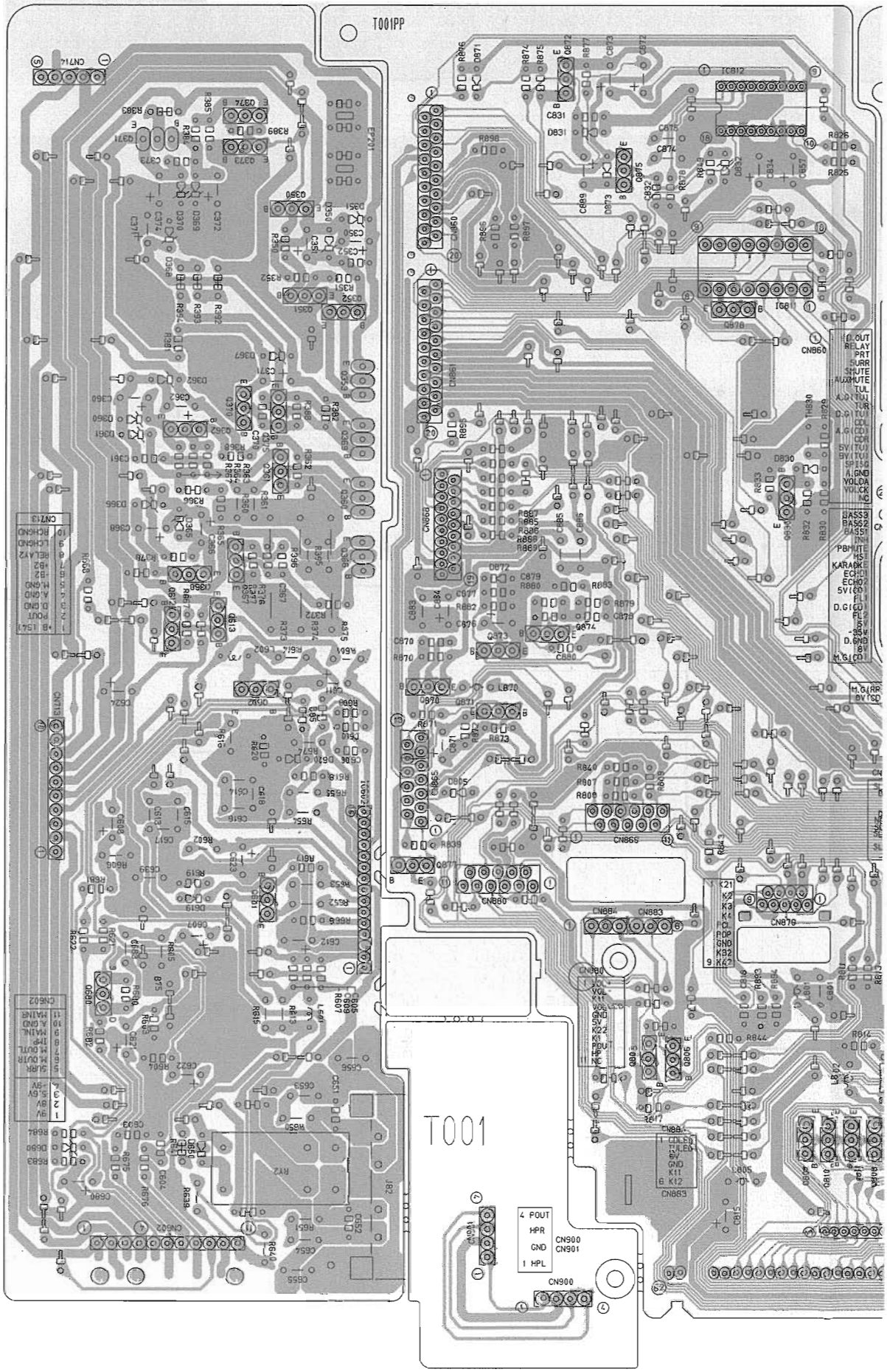

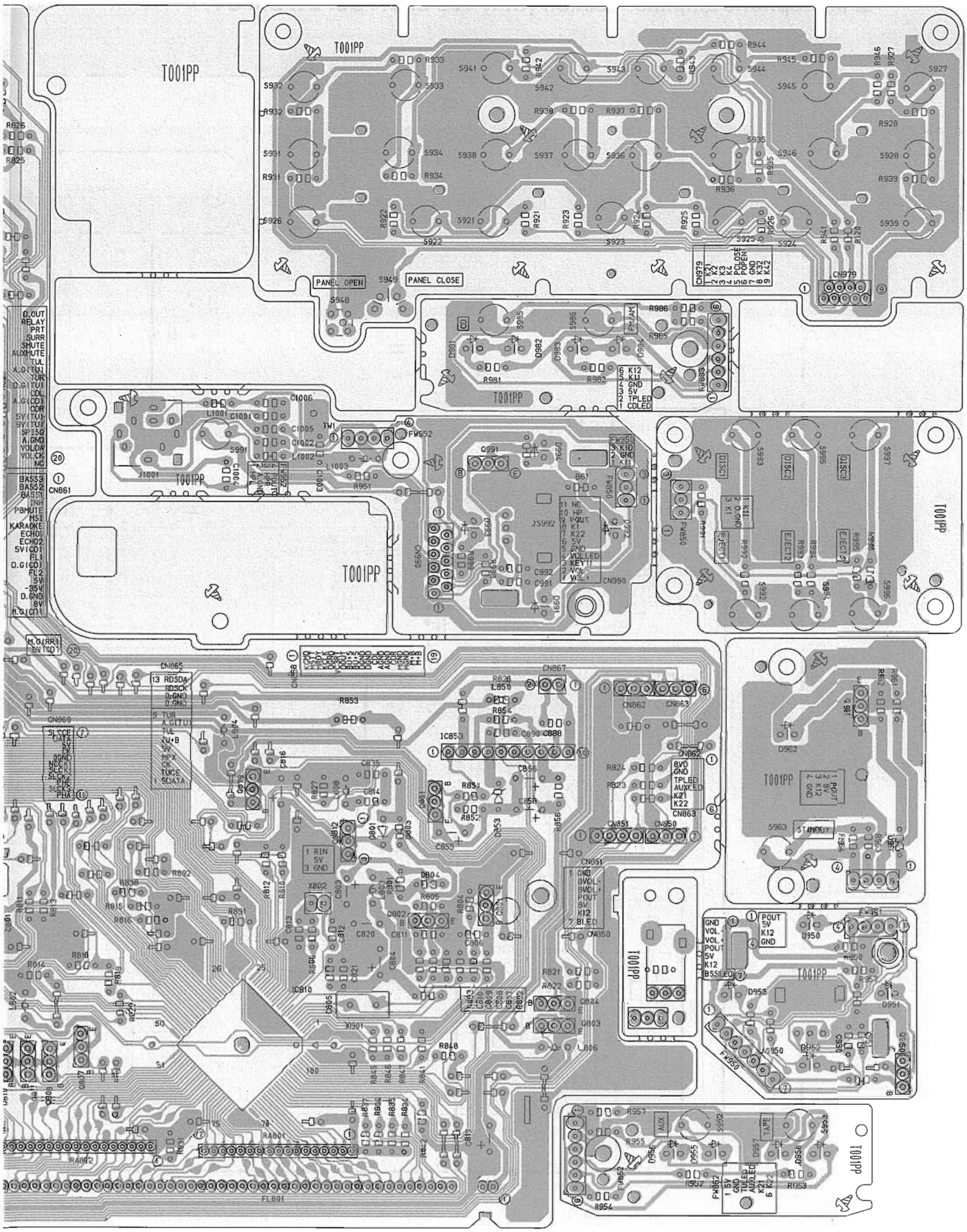
T001PP
PANEL OPEN
PANEL CLOSE
CN979
CN861
CN990
CN980
CN867
CN862
CN863
CN851
CN850
CN065
CN069
CN858
CN350
CN951
CN952
CN953
CN954
CN955
CN956
CN957
CN962
CN963
CN964
CN965
CN966
CN967
CN968
CN969
CN970
CN971
CN972
CN973
CN974
CN975
CN976
CN977
CN978
CN979
CN980
CN981
CN982
CN983
CN984
CN985
CN986
CN987
CN988
CN989
CN990
CN991
CN992
CN993
CN994
CN995
CN996
CN997
CN998
CN999
CN1000
CN1001

Input/output & power board

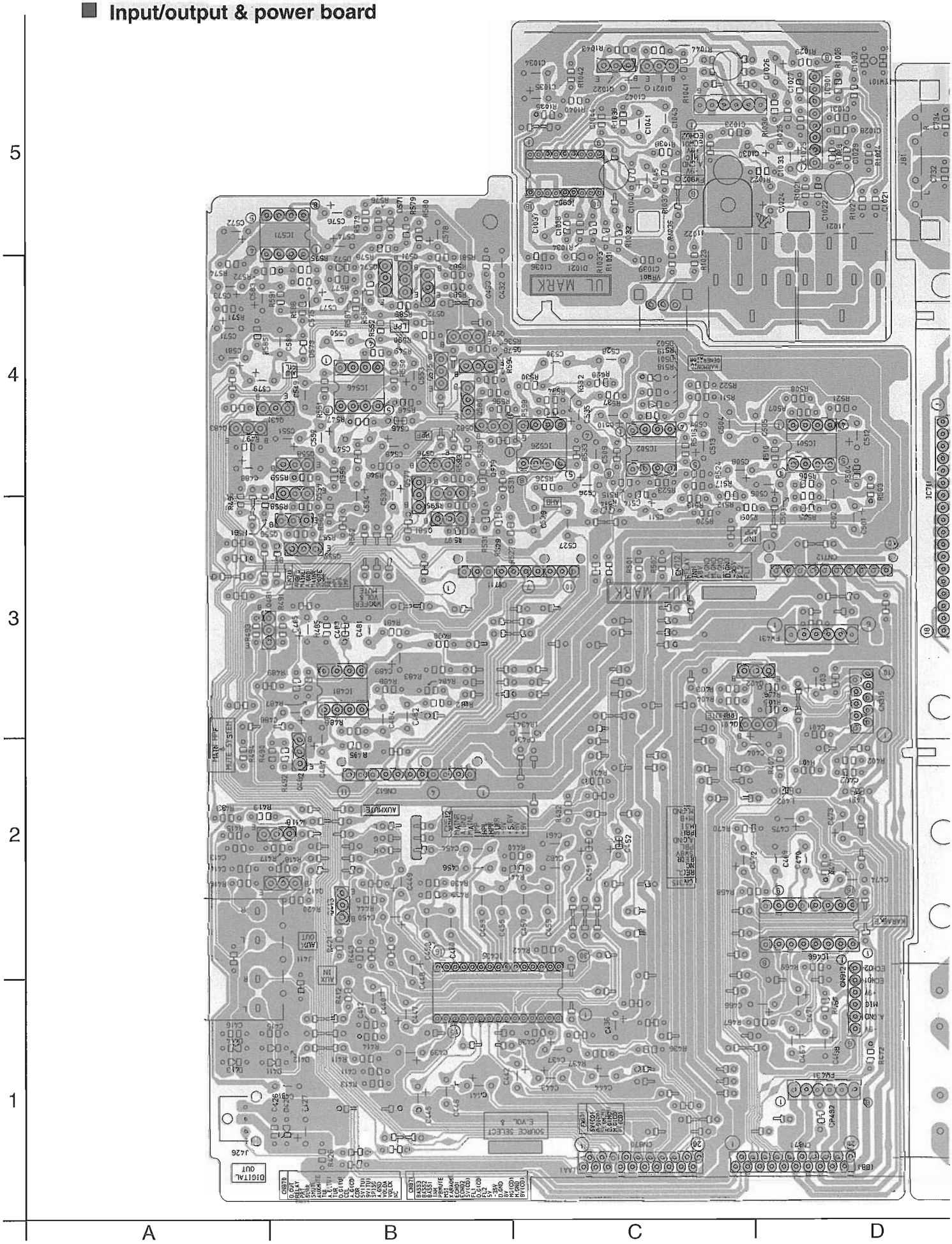

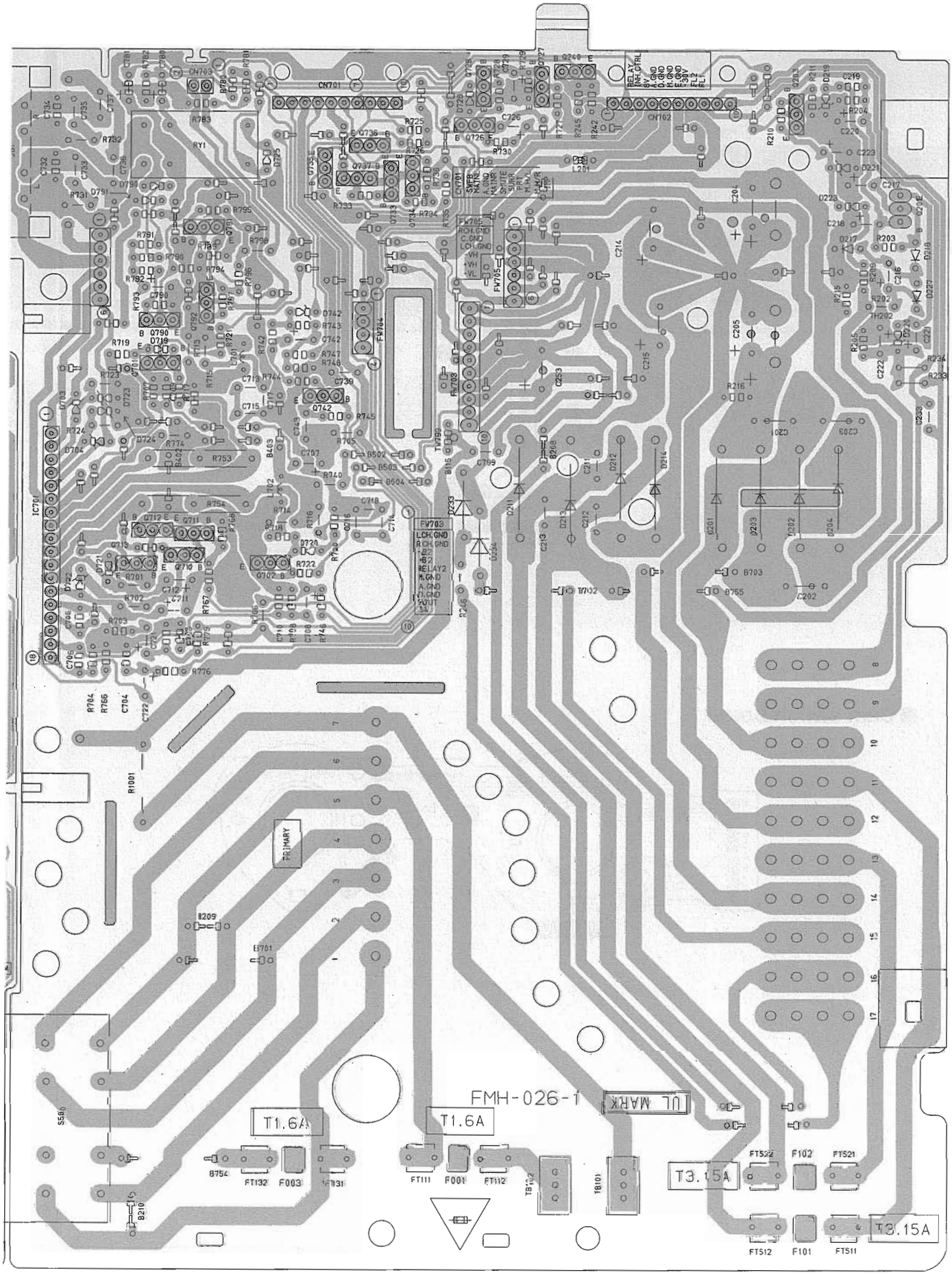
FMH-026-1
UL MARK
T1.6A
T1.6A
T3.15A
T3.15A
PRIMARY
CN701
CN702
CN703
RY1
IC701
FW703
FW704
FW705
TH202
F003
F001
F102
F101
FT132
FT131
FT111
FT112
FT522
FT521
FT512
FT511
B754
B210
B209
B701
B703
B755
B702
B101
B102
S580
R1001
R704
R756
C704
C722
RELAY
RY_CTRL
8V_GND
A_GND
D_GND
H_GND
E_GND
+30V
EL2
EL1

■ CD Tray section switch board

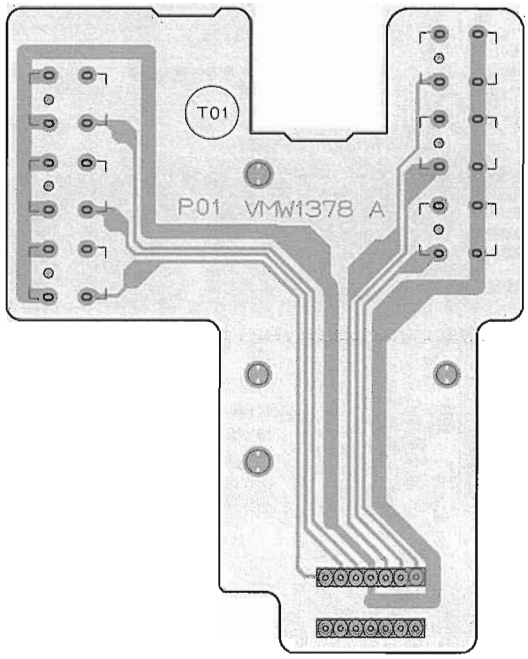

■ Cam switch board

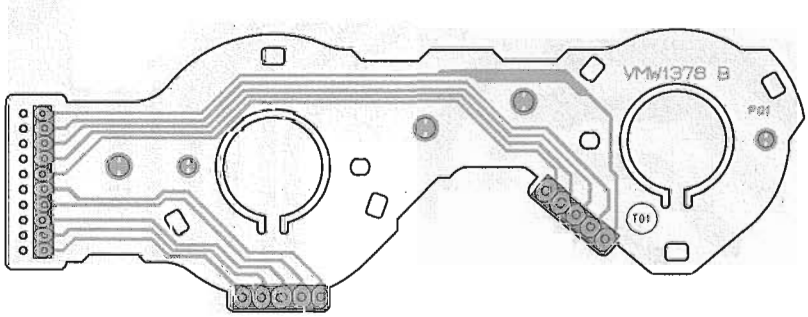

Tuner board

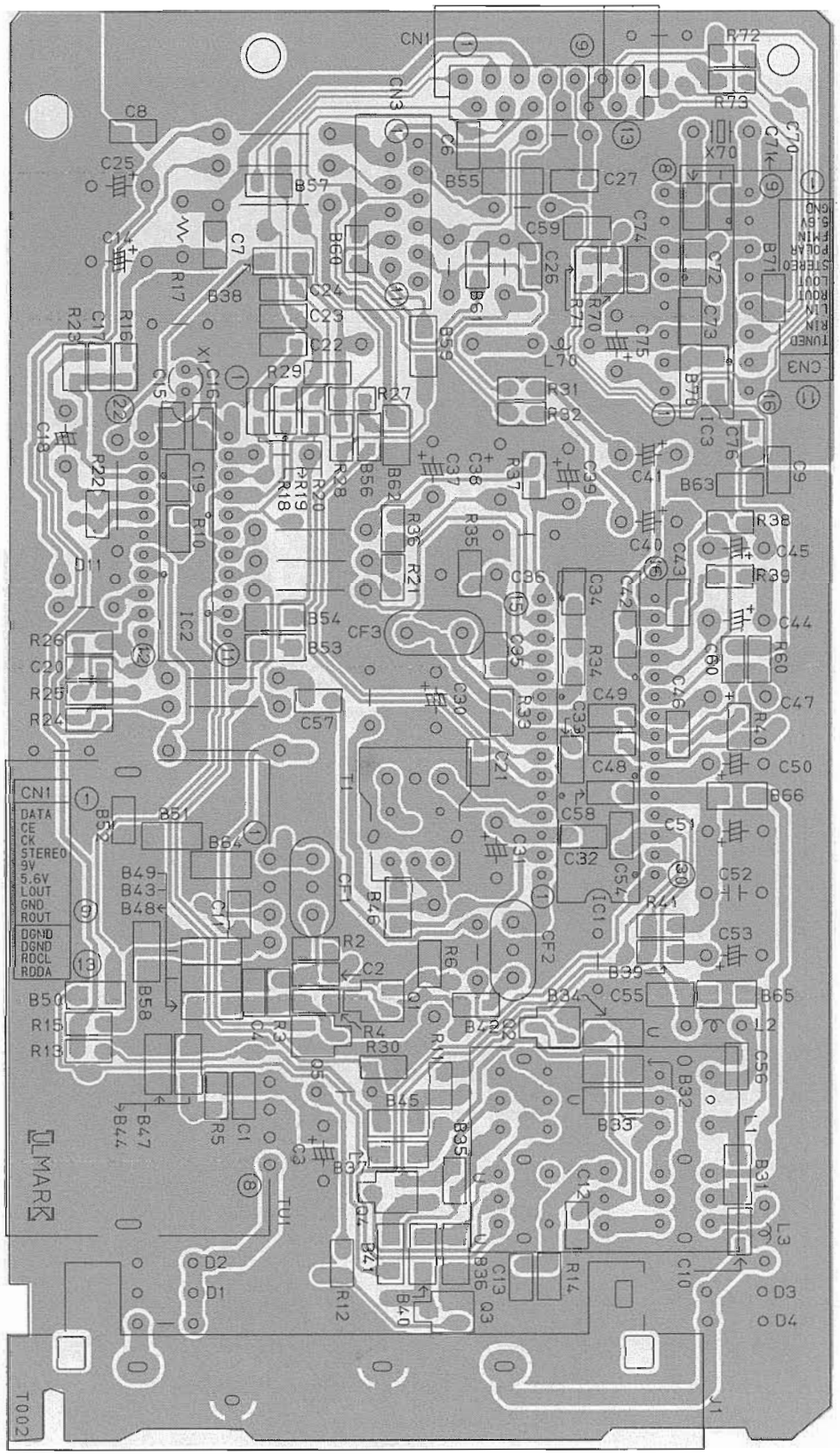

D | E | F | G | H

CD Servo control board

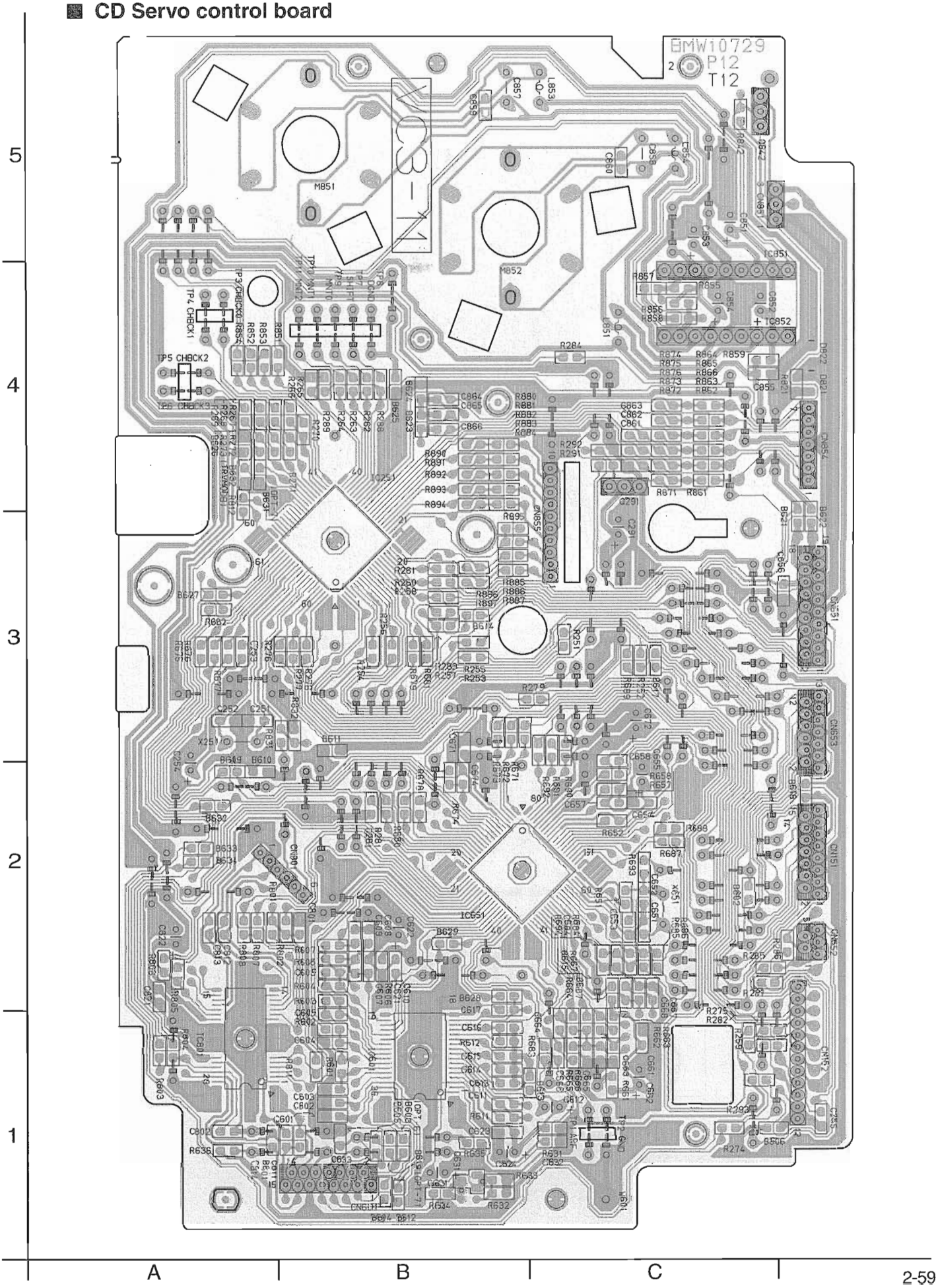

Cassette mechanism board

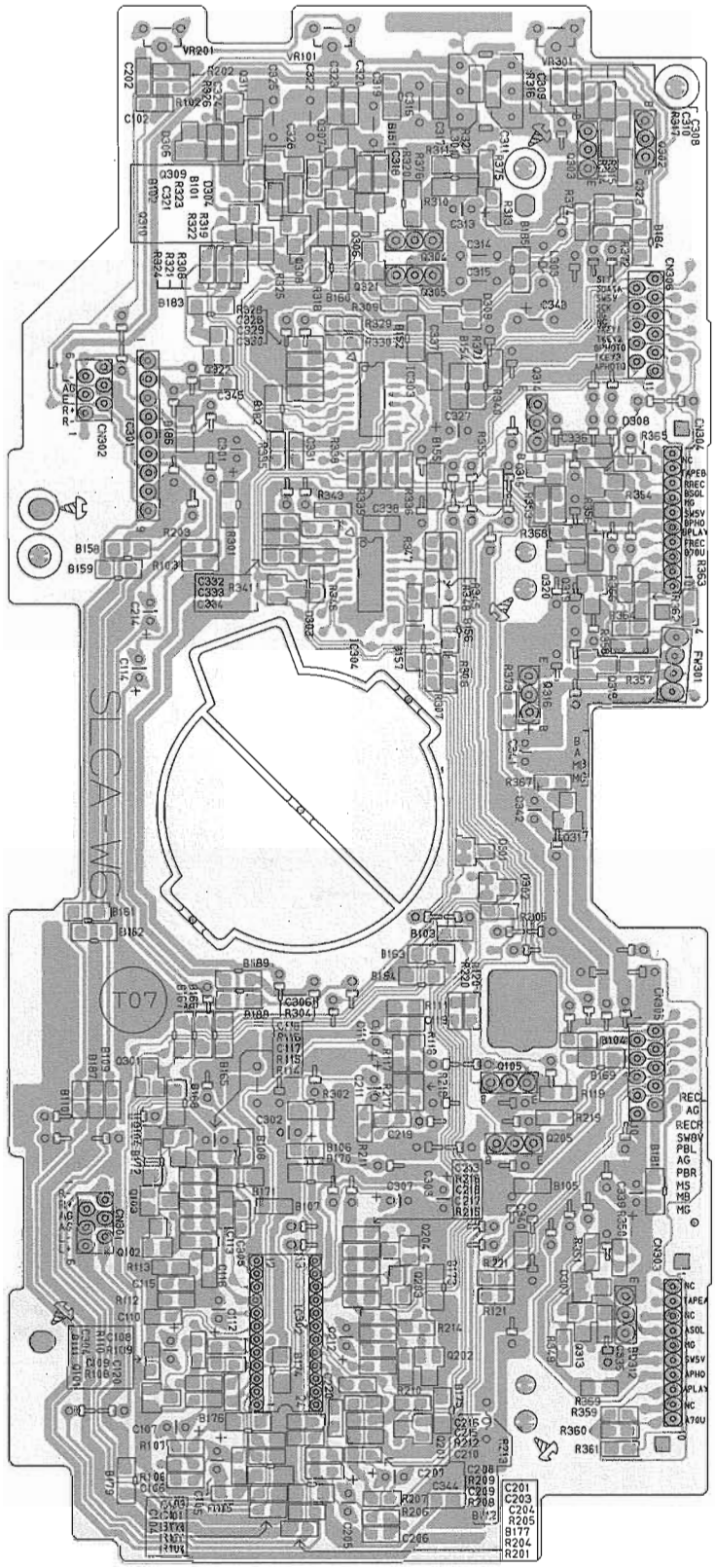

PARTS LIST

[MX-J500]

* All printed circuit boards and its assemblies are not available as service parts.

Area suffix

A ---------- Australia
UP ---------- Korea
US ---------- Singapore
UX ---------- Saudi Arabia

- Contents -

Exploded view of general assembly and parts list ---------- 3-2
CD changer mechanism assembly and parts list ---------- 3-5
CD mechanism assembly and parts list ---------- 3-7
Cassette mechanism assembly and parts list ---------- 3-8
Electrical parts list ---------- 3-13
Packing materials and accessories parts list ---------- 3-26

■ Parts list (General assembly)

Block No. M1MM

⚠	Item	Parts number	Parts name	Q'ty	Description	Area
	1	GV10027-003A	FRONT PANEL	1		A
		GV10027-002A	FRONT PANEL	1		UP,US,UX
	2	E75896-001	FELT SPACER	2		
	3	GV40077-001A	JVC BADGE	1		
	4	GV40080-001A	STANDBY INDICATOR	1		
	5	GV20056-001A	CD EJECT BUTTON	1		
	6	GV20057-001A	CD BUTTON	1		
	7	GV30087-001A	POWER BUTTON	1	ON/STANDBY MARK	
	8	GV30088-001A	PUSH BUTTON	1		
	9	GV20050-002A	SOURCE BUTTON(B)	1	TAPE/AUX MARK	
	10	GV20049-003A	SOURCE BUTTON(A)	1	CD/TUNER MARK	
	11	QYSDSF2608Z	SCREW	2	POWER BOARD	
	12	QYSDSF2608Z	SCREW	1	REMOTE SENSOR	
	13	QYSDSF2608Z	SCREW	6	STY.BKT+F.PANEL	
	14	GV30082-001A	STAY BRACKET	1		
	15	QYSDSF2608Z	SCREW	4	CD SWITCH BOARD	
	16	QYSDSF2608Z	SCREW	2	VOLUME BOARD	
	17	QYSDSF2608Z	SCREW	2	CD/TUNER S.BOARD	
	18	QYSDSF2608Z	SCREW	2	TAPE/AUX S.BOARD	
	19	FMYH4004-001	PLASTIC RIVET	2	TRANS.SHD/P.BRD	
	20	GV10029-001A	CASS.HOLDER(L)	1		
	21	GV10030-001A	CASS.HOLDER(R)	1		
	22	GV20053-001A	CASS.LENS(L)	1		
	23	GV20054-001A	CASS.LENS(R)	1		
	24	GV30077-001A	EJECT BUTTON(A)	1		
	25	GV30078-001A	EJECT BUTTON(B)	1		
	26	FMKW4009-001	HOLDER SPRING(A)	1		
	27	FMKW4010-001	HOLDER SPRING(B)	1		
	28	FMKW4011-001	SPRING	1	FOR EJECT LEVER	
	29	FMKS3002-003	EJECT LEVER(A)	1		
	30	FMKS3003-003	EJECT LEVER(B)	1		
	31	GV40034-001A	DAMPER ASSY	2		
	32	VKY4180-401	CASSETTE SPRING	4		
	33	GV10014-005A	CASE ASS'Y	1		
	34	MXN-13FB12F	DC MOTOR	1		
	35	GV40022-001A	MOTOR PULLEY	1		
	36	GV30038-001A	CAPSTAN BELT	1		
	37	GV30086-001A	MOVING PANEL(A)	1		
	38	GV30089-001A	PANEL PLATE	1		
	39	GV20058-001A	CONTROL BUTTON	1		
	40	QYSDSF2608Z	SCREW	4		
	41	GV30042-002A	PANEL BRACKET	1		
	42	GV40028-001A	PANEL HOLDER(L)	1		
	43	GV40028-002A	PANEL HOLDER(R)	1		
	44	QYSDSF2608Z	SCREW	4	S.BRD./C.BTN.ASS'Y	
	45	GV20059-001A	MOVING PANEL(B)	1		
	46	QYSBST2606Z	T.SCREW	3	M.PNL B/PNL BKT	
	47	VKZ4341-204	SPECIAL SCREW	2	ARM CASE/PANEL BKT	

■ Parts list (General assembly)

Block No. M1MM

⚠	Item	Parts number	Parts name	Q'ty	Description	Area
	48	QYSDSF2608Z	SCREW	2	FL BOARD / CASE	
	49	QYSSSF3012Z	TAP SCREW	4	MOVING PNL./F.P	
	50	----------	CASSETTE MECHA	1		
	51	FMKL4012-004	EJECT SAFETY(A)	1		
	52	FMKL4013-001	EJECT SAFETY(B)	1		
	53	FMKW4007-001	SPRING (A)	1	EJECT SAFETY (A)	
	54	FMKW4008-001	SPRING (B)	1	EJECT SAFETY (B)	
	55	GV20055-001A	HOLDER BRACKET	1		
	56	QYSBSG3010E	T.SCREW	2	F.P.TO H.BKT.	
	57	QYSBSG3010E	T.SCREW	2	F.P.TO CHS.BASE	
	58	QYSBSG3010Z	T.SCREW	4	MECHA & H.BKT.	
	59	QYSBSF3012Z	SCREW	4	MECHA & F.PANEL	
	60	QYSBSG3010E	T.SCREW	2	TRANS SHD/C.BASE	
	61	----------	CD CHANGER MECH	1		
	62	E309662-001SM	DISC STOPPER	1		
	63	QYSBSF3008Z	SCREW	1	FOR DISC STOPPER	
	64	GV10025-001A	CHASSIS BASE	1		
	65	E75896-006	FELT SPACER	2	CHAS.BASE FOOT	
	66	GV30083-001A	HEAT SINK	1		
	67	QYSBSG3014E	T.SCREW	2	FOR LEAF SPRING	
	68	QYSBSG3020E	TAP SCREW	2	FOR IC BRACKET	
	69	GV40029-001A	LEAF SPRING	1		
	70	GV30080-001A	IC BRACKET	1		
	71	QYSDSTL4008Z	SPECIAL SCREW	4		
	72	GV30079-001A	TRANS.SHIELD	1		
	73	QYSBSGG3008E	T.SCREW	1	M.BOARD & C.BASE	
⚠	74	EMP7000-200	POWER CORD	1		UP
⚠		QMPG020-244-JC	POWER CORD	1		A
⚠		QMPR110-200-JN	POWER CORD	1		UX
⚠		QMPK090-205-JN	POWER CORD	1		US
	75	QZW0033-001	STRAIN RELIEF	1		
⚠	78	QQT0276-003	POWER TRANSFORMER	1	T001	UP,US,UX
⚠		QQT0276-002	POWER TRANSFORMER	1	T001	A
⚠	79	QMF51E2-1R6-J1	FUSE	1	F001	A,UP
⚠		QMF51E2-3R15-J1	FUSE	1	F001	US,UX
⚠	80	QMF51E2-3R15-J1	FUSE	1	F101	
⚠	81	QMF51E2-3R15-J1	FUSE	1	F102	
	82	QUQ412-1028CJ	FFC WIRE	1	FC315	
	83	QUQ412-1112DJ	FFC WIRE	1	FC869	
	84	QUQ610-0915BJ	FFC WIRE	1	FC879	
	85	QUQ110-1908BJ	FFC WIRE	1	FC868	
	86	QUQ412-0917CJ	FFC WIRE	1	FC865	
	87	QUQ412-1112DJ	FFC WIRE	1	FC880	
	88	QUQ412-1112DJ	FFC WIRE	1	FC906	
	89	GV10026-005A	REAR PANEL	1		A
		GV10026-003A	REAR PANEL	1		US,UX
		GV10026-011A	REAR PANEL	1		UP
	90	E207356-002SM	REAR COVER	1		

■ Parts list (General assembly)

Block No. M1MM

⚠	Item	Parts number	Parts name	Q'ty	Description	Area
	91	QYSBSF3010Z	SCREW	2	C3 / STAY BRKT.	
	92	QYSBSGY3008E	SPECIAL SCREW	2	ANTENA/R.PANEL	
	93	QYSBSGY3008E	SPECIAL SCREW	1	AUX TERM./R.PANEL	
	94	QYSBSGY3008E	SPECIAL SCREW	2	SPK TERM./R.PANEL	
	95	QYSBSGY3008E	SPECIAL SCREW	4	H.SINK/ R.PANEL	
	96	QYSBSGY3008E	SPECIAL SCREW	2	R.COVER/R PANEL	
	97	QYSBSGY3008E	SPECIAL SCREW	1	GROUND /R.PANEL	
	98	QYSBSGY3008E	SPECIAL SCREW	2	C3 / REAR PANEL	
	99	QYSBSGY3008E	SPECIAL SCREW	1	R.PANEL/C.BASE	
	100	QYSBSGY3008E	SPECIAL SCREW	1		A
	101	GV10024-001A/S/	METAL COVER	1		
	102	QYSDSG3006M	T.SCREW	2	M.COVER+C.BASE	
	103	QYSBSGY3008E	SPECIAL SCREW	6	M.COVER+R.PANEL	
	104	GV30074-001A	CD FITTING	1	DISC 1	
	105	GV30075-001A	CD FITTING	1	DISC 2	
	106	GV30076-001A	CD FITTING	1	DISC 3	
	107	GV30084-001A	KNOB	2	SA BASS & VOL.	
	108	GV10028-001A	WINDOW SCREEN	1		
	109	QYSDSF2608Z	SCREW	2	WIRE &MOTOR STOPPER	
	110	FMYH4004-001	PLASTIC RIVET	2	TUNER BRD.HOLDER	
	113	GV30104-001A	PROTECT SHEET	1		
	114	GV40082-001A	MIC BRACKET	1		UP,US,UX
	115	QYSDSF2608Z	SCREW	2	MIC BKT.+F.PANEL	UP,US,UX
	116	QYSBST3006Z	T.SCREW	1	MIC BRD./MIC.BKT	UP,US,UX
	117	VKZ4001-110S	WIRE HOLDER	1		UP,US,UX
⚠	118	QMF51E2-1R6-J1	FUSE	1	F003	US,UX
	119	QYSBSF3012E	SPECIAL SCREW	2	VOL.SEL/R.PANEL	UP,US,UX
	120	GV40083-001A	MIC VOL KNOB	1		UP,US,UX
	121	GV40123-001A	FELT SPACER	1		
	122	GV30032-001A	FL HOLDER	1		
	123	E3400-439	FELT SPACER	2		

Exploded view of general assembly and parts list

Block No. M 1 M M

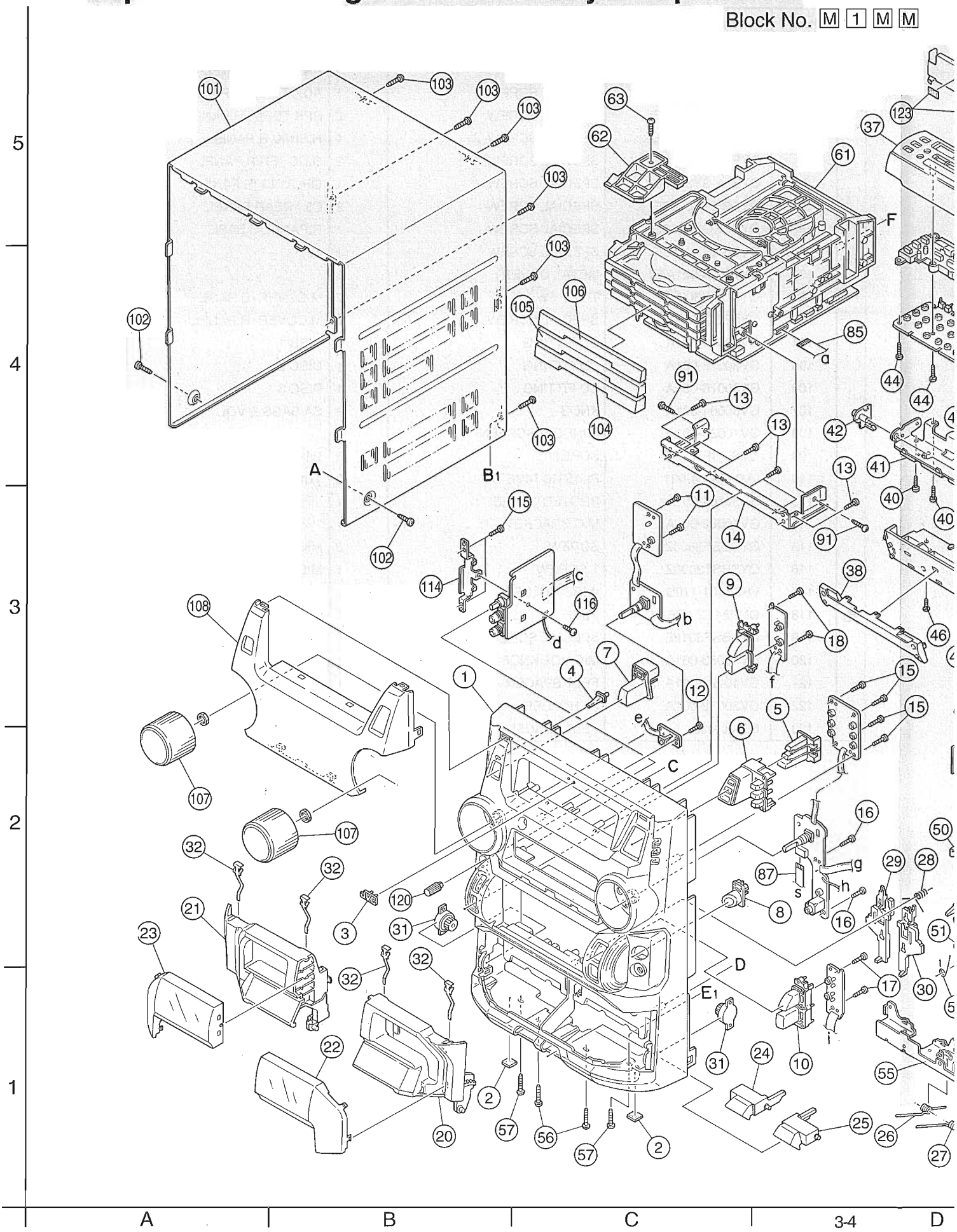

VI

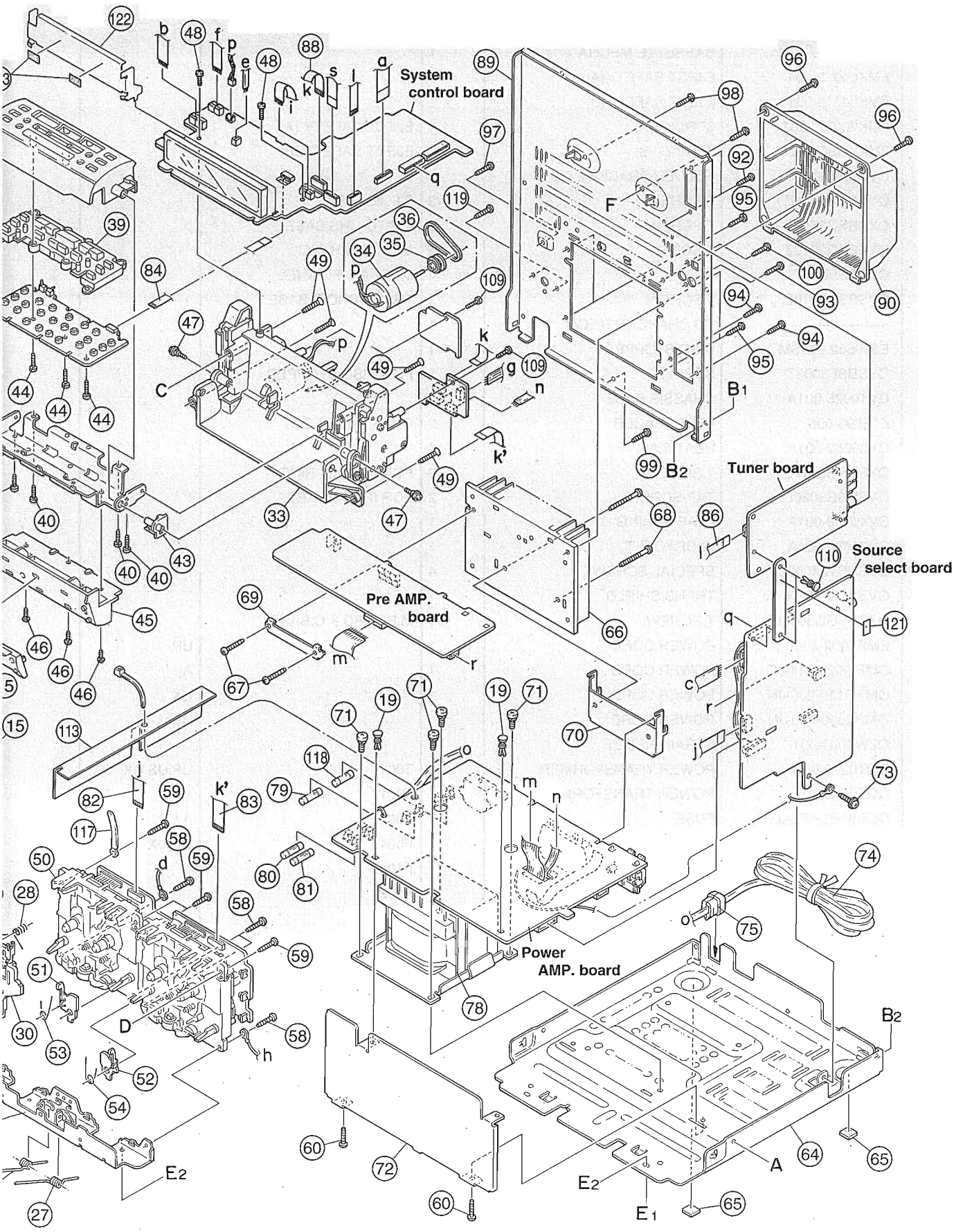
System control board
Pre AMP. board
Tuner board
Source select board
Power AMP. board
A
B1
B2
C
D
E1
E2
F

D | E | F | G | H

CD changer mechanism assembly and parts list

VC3-21M

Block No. M 2 M M

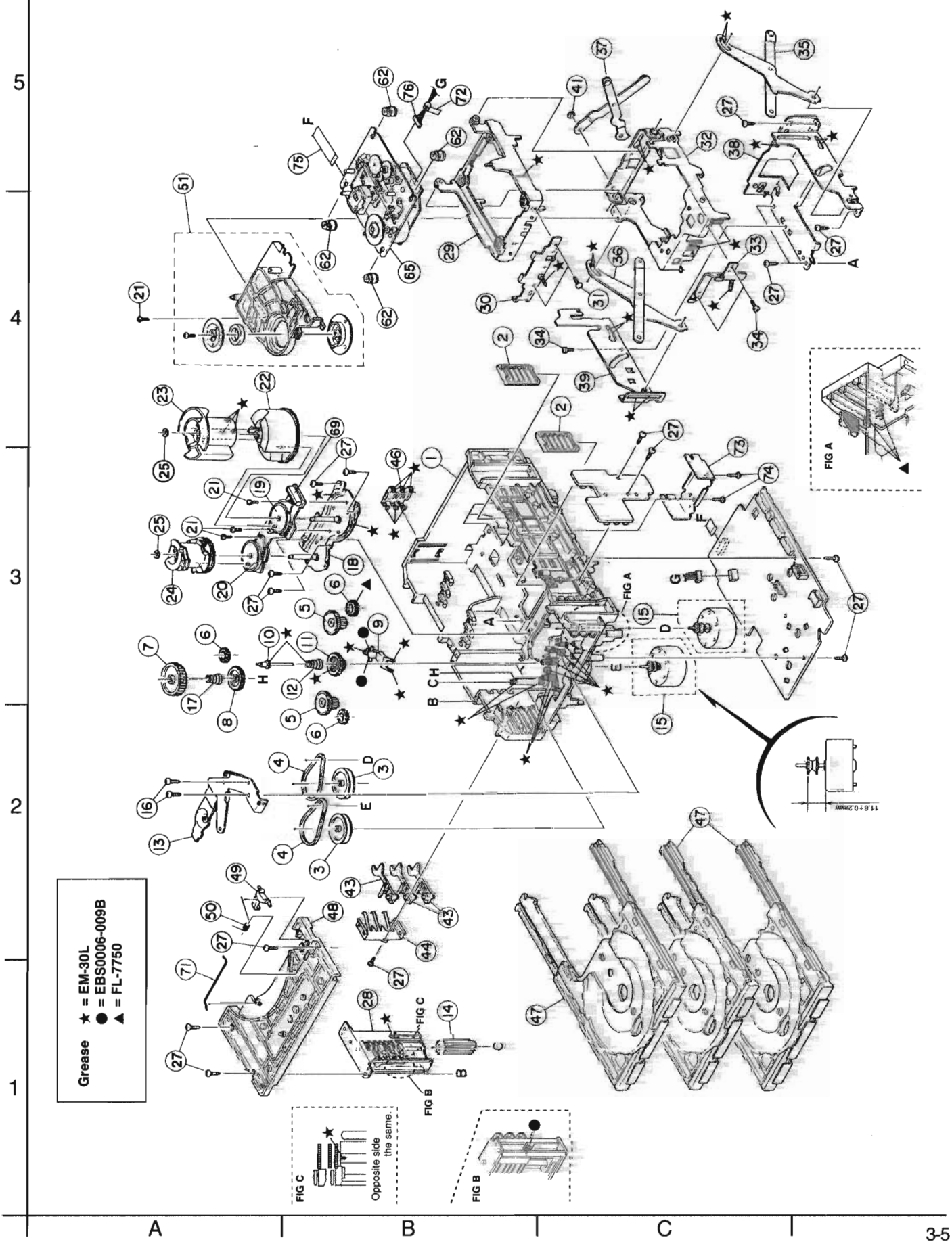

■ Parts list (CD changer mechanism)

Block No. M2MM

⚠	Item	Parts number	Parts name	Q'ty	Description	Area
	1	VKS1144-003	CHASSIS	1		
	2	VKS3698-003	TRAY GUIDE	2		
	3	VKS5532-003	PULLEY GEAR	2		
	4	VKB3000-164	BELT	2		
	5	VKS5505-003	GEAR B	2		
	6	VKS5506-002	GEAR C	3		
	7	VKS5507-002	CROSS GEAR U	1		
	8	VKS5508-002	CROSS GEAR L	1		
	9	VKS5510-003	SELECT LEVER	1		
	10	VKH5769-001	S.G.SHAFT	1		
	11	VKS5511-002	SELECT GEAR	1		
	12	VKW5155-003	COMP.SPRING	1	FOR SELECT GEAR	
	13	VKM3846-002	GEAR BRACKET	1		
	14	VKS5509-002MM	CYLINDER GEAR	1		
	15	MSN5D257A-SA2	D.C.MOTOR ASS'Y	2		
	16	QYSPSPD2616Z	SCREW	2	FOR MOTOR	
	17	LV40612-001A	COMP.SPRING	1		
	18	VKM3825-00AMM	C.G.BASE ASS'Y	1		
	19	VKZ3172-00ASS	CAM SW. R ASS'Y	1		
	20	VKZ3173-00ASS	CAM SW. L ASS'Y	1		
	21	QYSPST2606Z	SCREW	4		
	22	VKS2263-002MM	CAM R1	1		
	23	VKS2264-002MM	CAM R2	1		
	24	VKS2265-002MM	CAM GEAR L	1		
	25	WDL316050MM	SLIT WASHER	2		
	27	QYSBSF2608Z	T.SCREW	16		
	28	VKS3702-00FMM	DRIVE UNIT	1		
	29	VKS2247-004	MECHA HOLDER A	1		
	30	VKL7767-00B	BRACKET ASS'Y	1		
	31	QYSBSF2606Z	SCREW	2	FOR BRACKET	
	32	VKM3860-00A	M.HOLDER B AS'Y	1		
	33	VKL7802-00C	M.HOLDER C AS'Y	1		
	34	QYSDST2604Z	SCREW	3		
	35	VKL7810-00A	LIFTER ASS'Y R	1		
	36	VKL7811-00A	LIFTER ASS'Y L	1		
	37	VKL7812-00A	LIFTER ASS'Y H	1		
	38	VKL2732-002	LIFTER BASE	1		
	39	VKM3857-001	LIFTER BRACKET	1		
	41	WDL266035-2	SLIT WASHER	1		
	43	VKS5514-002MM	LOCK LEVER	3		
	44	VKY3133-002MM	RETURN SPRING	1		
	46	VKY3134-003MM	CLICK SPRING	1		
	47	VKS2252-00E	TRAY ASS'Y	3		
	48	VKS2250-003	TOP BRACKET	1		
	49	VKS5515-002	S.TRAY STOPPER	1		
	50	VKW5156-004	TORSION SPRING	1		
	51	VKS3703-00G	CLAMPER ASS'Y	1		
	62	LV40761-003A	INSULATOR	4		
	65	----------	CD MECHA	1		
	69	QGB2012J1-10	CONNECTOR	1		
	71	VKW5187-001	ROD	1		
	72	VYSA1R2-033	SPACER	1	FOR EWS176-008	
	73	LE30611-001A	C.B HOLDER	1	FOR CD CB	
	74	QYSBSF3008Z	SCREW	2	FOR HOLDER	
	75	QUQ610-1509AJ	CARD WIRE	1	TRAVERSE 15	
	76	EWS176-008	FLAT WIRE	1	TRAVERSE 6	

CD mechanism assembly and parts list

Block No. M 3 M M

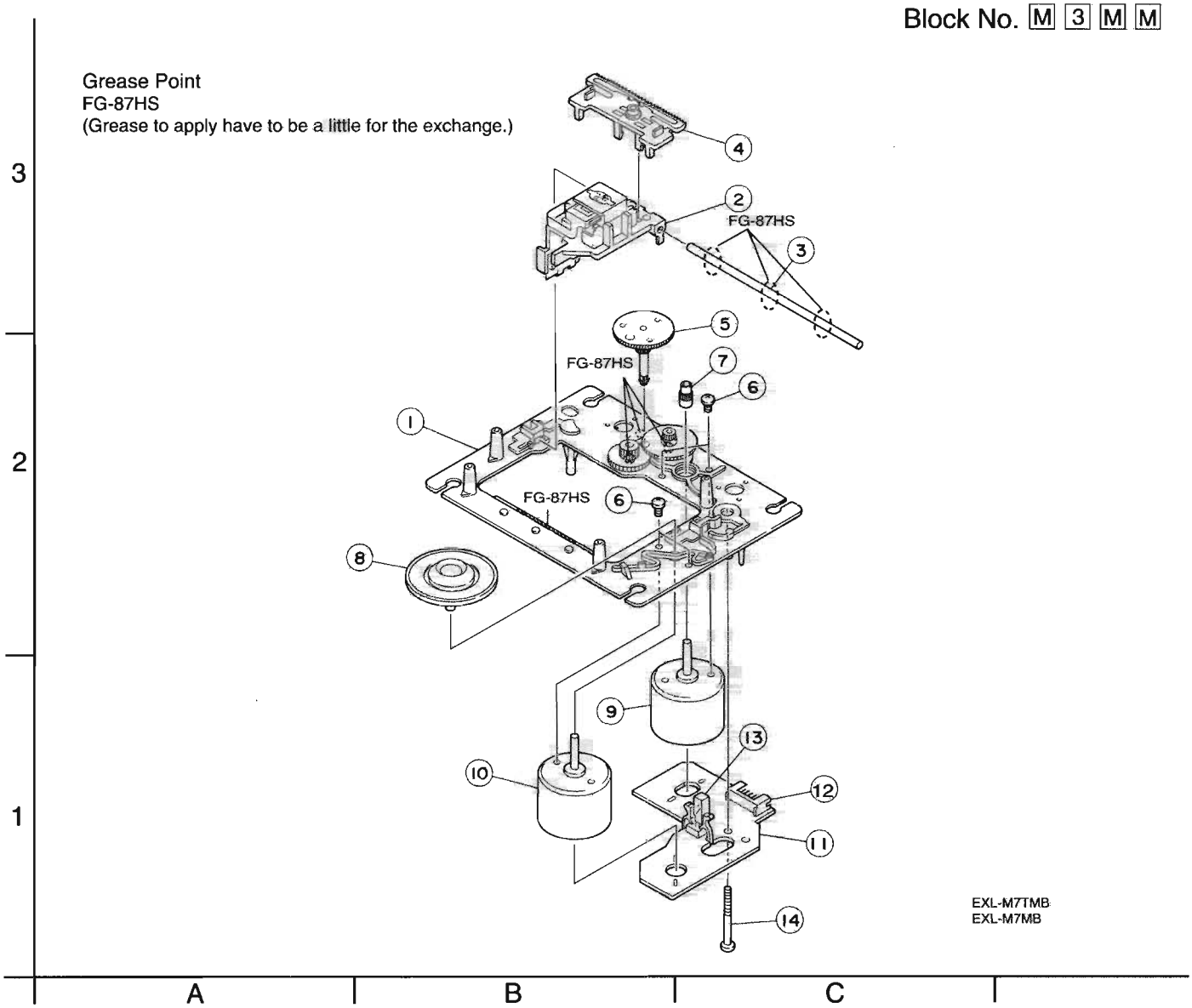

■ Parts list (CD mechanism)

Block No. M3MM

⚠	Item	Parts number	Parts name	Q'ty	Description	Area
	1	E102731-221SM	MECHA BASE	1		
	2	OPTIMA-7B	OPTICAL PICK UP	1		
	3	E406777-002SM	CD SHAFT	1		
	4	LV31002-001A	CD RACK	1		
	5	E307745-441SM	MECHA GEAR	1		
	6	QYSDSP2003N	SCREW	4		
	7	E406750-442SM	PINION GEAR	1		
	8	EPB-001PK	TURN TABLE	1	SINGLE CD	
		EPB309173PKA	TURN TABLE	1	CHANGER CD	
	9	E406784-001	FEED MOTOR	1		
	10	QAR0130-001	SPPINDLE MOTOR	1		
	11	EMW10190-441	P.C.BOARD	1		
	12	QGA2001F1-06	6P PLUG ASSY	1		
	13	QSW0506-001	LEAF SWITCH	1		
	14	E75832-221SS	SPECIAL SCREW	1		

Cassette mechanism assembly and parts list

Block No. M 4 M M

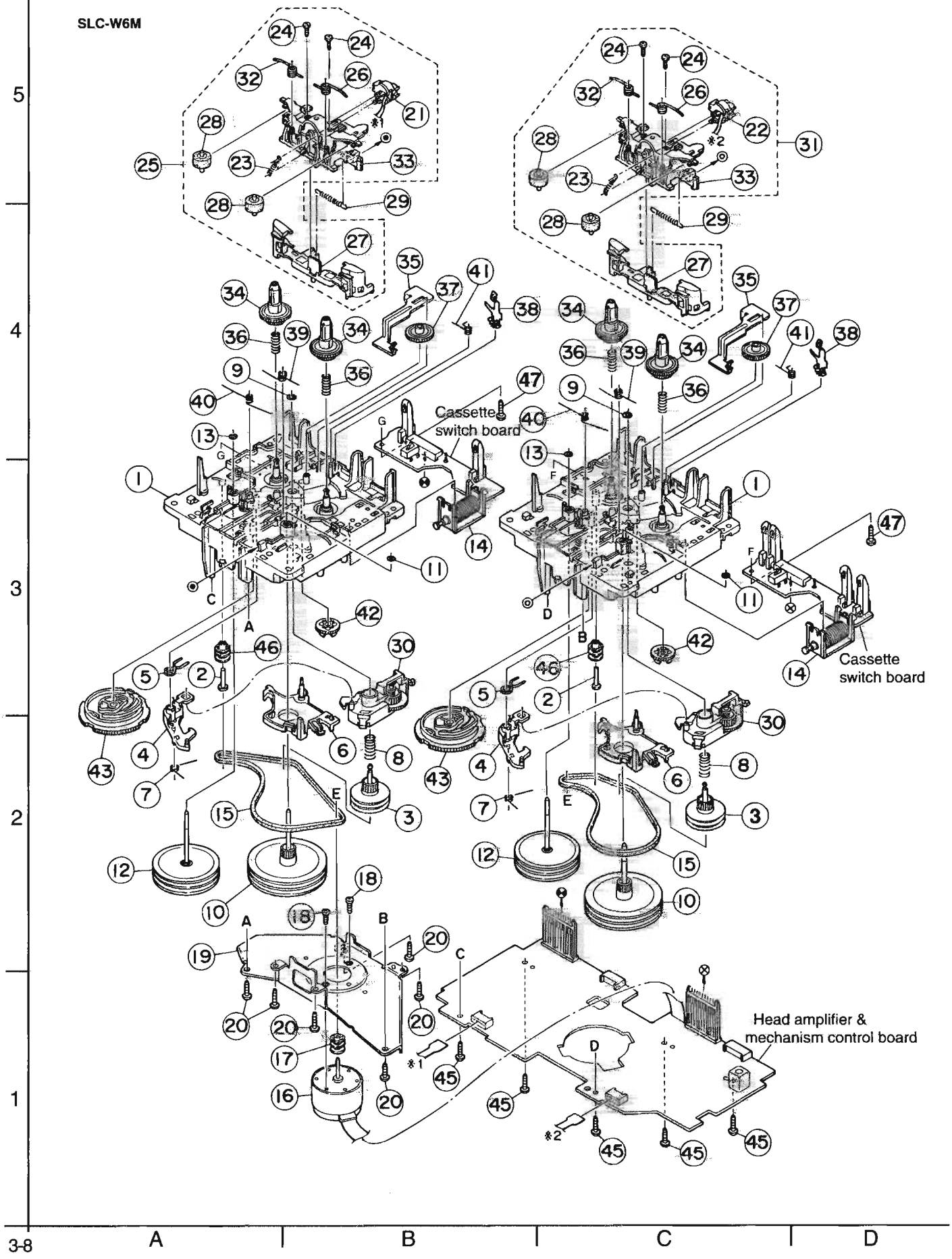

■ Parts list (Cassette mechanism)

Block No. M4MM

⚠	Item	Parts number	Parts name	Q'ty	Description	Area
	1	VKS1165-00H	CHASSIS B.ASS'Y	2		
	2	VKH5786-002	SHAFT	2		
	3	VKS5603-00D	MAIN PULLEY ASY	2		
	4	VKS3785-001MM	FR ARM	2		
	5	VKW5284-002	SWING SPRING	2		
	6	VKS2278-003	TRIGGER ARM	2		
	7	VKW5301-001	FR SPRING	2		
	8	VKW5266-001	ELEVATOR SPRING	2		
	9	WDL214025	WASHER	2		
	10	VKF3205-00B	F.WHEEL ASSY(R)	2		
	11	WDL183425	SLIT WASHER	2		
	12	VKF3207-00B	F.WHEEL ASSY(L)	2		
	13	WDL173525-6	SLIT WASHER	2		
	14	VKZ3174-00A	DC SOLENOID	2		
	15	VKB3000-182	CAPSTAN BELT(B)	2		
	16	MSI-5U2LWA	D.C.MOTOR ASS'Y	1		
	17	VKR4761-001	MOTOR PULLEY	1		
	18	QYSPSP2604Z	SCREW	2		
	19	VKM3907-001	JOINT BRACKET	1		
	20	QYSBSF2608Z	T.SCREW	6		
	21	LV41090-001A	P.B.HEAD	1		
	22	LV41089-001A	R/P&E HEAD	1		
	23	VKW5302-001	HEAD SPRING	2		
	24	VKZ4730-001	SPECIAL SCREW	4		
	25	VKS2279-00D	HEAD MOUNT ASSY	1		
	26	VKW5299-002	PIN ROL.SP.(R)	2		
	27	VKS2277-005	DIRECTION LEVER	2		
	28	VKP4233-00A	PINCH ROL. ASSY	4		
	29	VKW5285-001	RETURN SPRING	2		
	30	VKS3786-00G	CLUTCH ASS'Y	2		
	31	VKS2275-00D	HEAD MOUNT ASSY	1		
	32	VKW5300-002	PIN ROL.SP.(L)	2		
	33	VKS1167-001	HEAD MOUNT BASE	2		
	34	VKS2274-002	REEL GEAR	4		
	35	VKM3906-003	PLAY SW LEVER	2		
	36	VKW5286-002	B.T. SPRING	4		
	37	VKS5559-001	PLAY IDLE GEAR	2		
	38	VKY3149-002	CASSETTE SP.	2		
	39	VKW5279-001	HEAD BASE SP(R)	2		
	40	VKW5280-001	HEAD BASE SP(L)	2		
	41	VKW5296-001	EARTH SPRING	2		
	42	VKS5597-00A	BLIND	2		
	43	VKS1166-003	CONTROL CAM	2		
	45	QYSBSF2608Z	T.SCREW	5	FOR P.W.B.	
	46	VKR4749-002	IDLE PULLEY	2		
	47	QYSBSF2006Z	SCREW	2		

Grease point

Grease	
	★ =JC-525
	■ =FL-7750
	▲ =UD-24
	△ =UD-24H2
	● =LX-1349B
	◎ =MOBIL-1

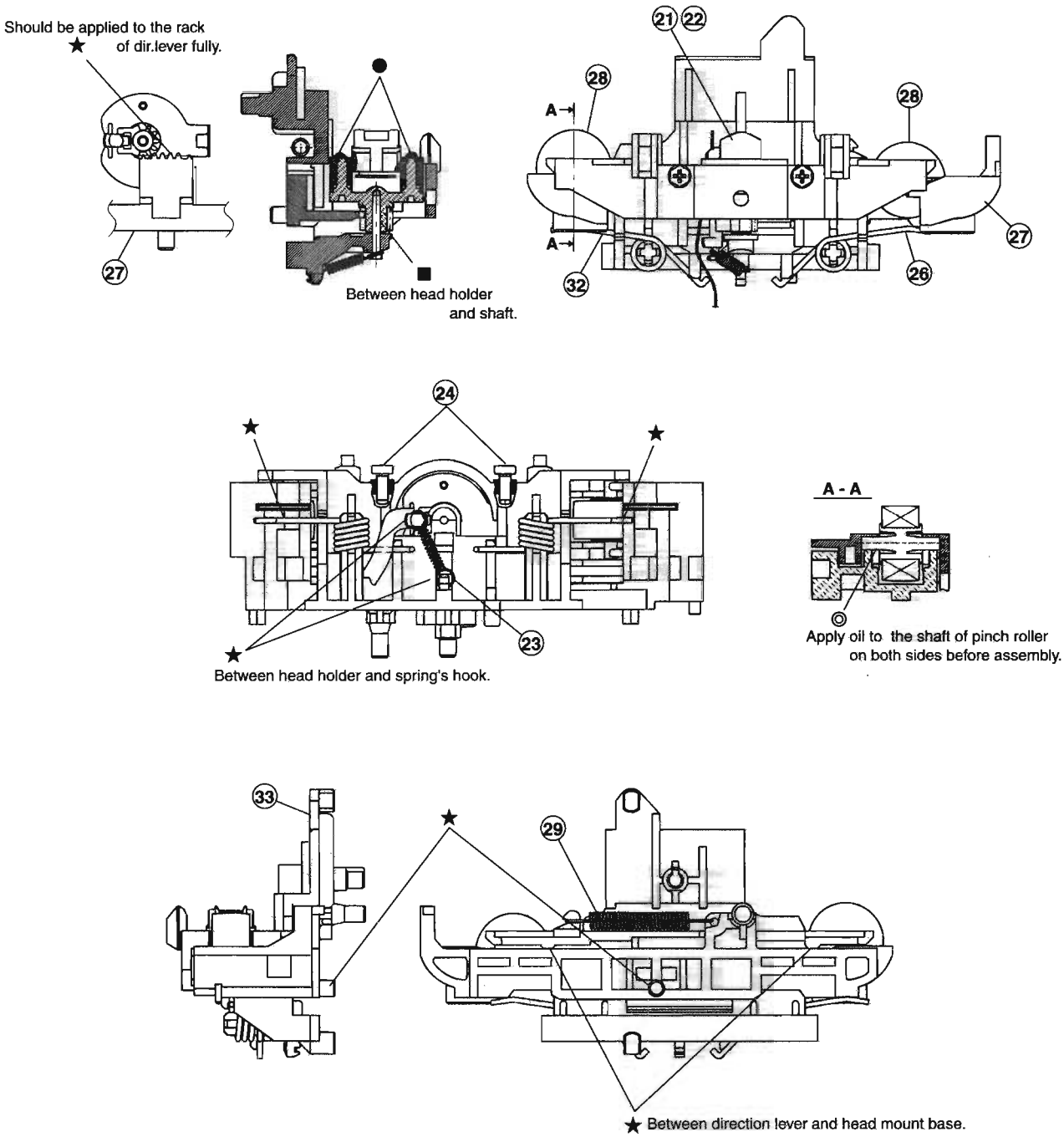

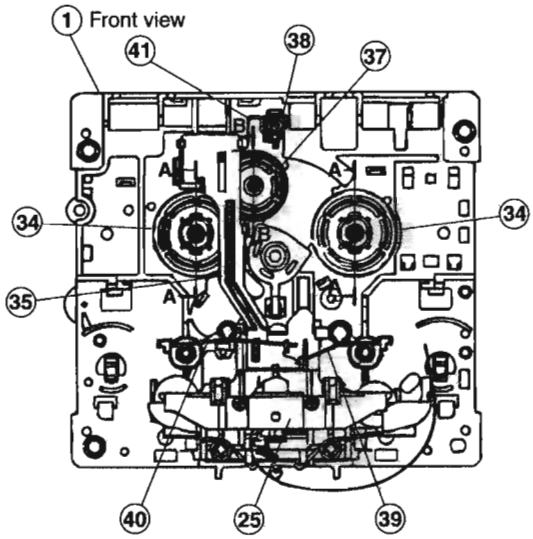

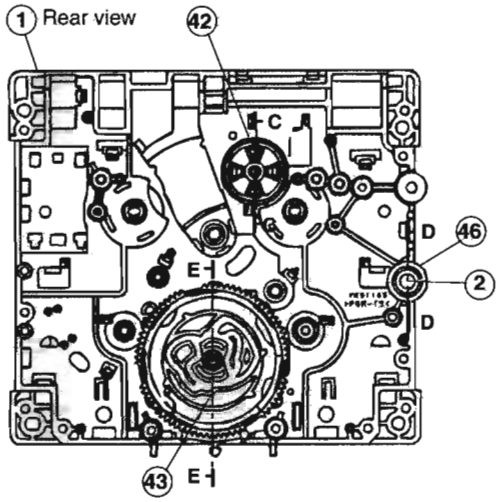

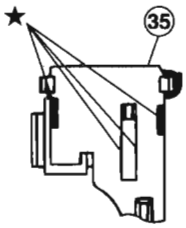

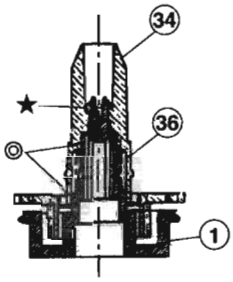

A - A (2/1, 2 places)

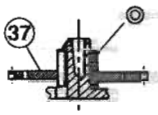

B - B (2/1)

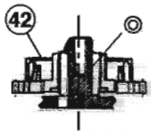

C - C (2/1)

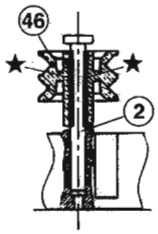

D - D (2/1)

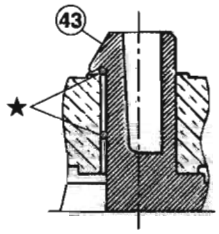

E - E (5/1)

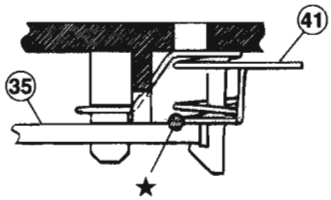

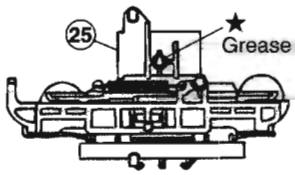

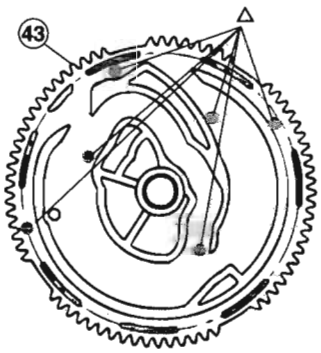

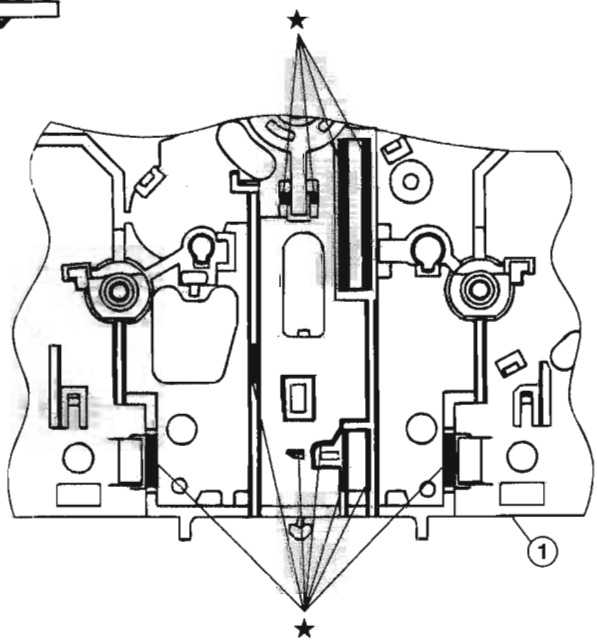

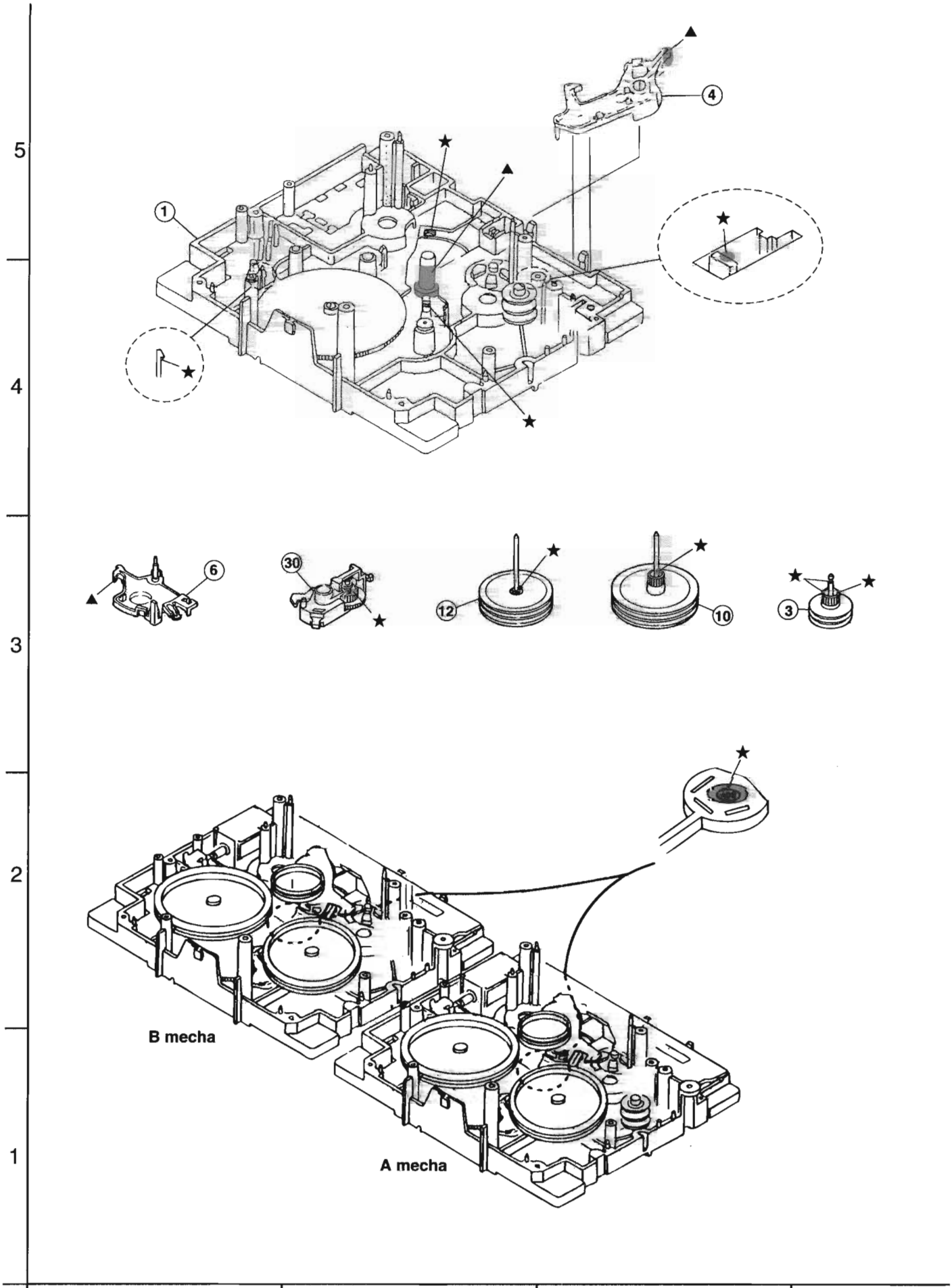
5
4
3
2
1
1
4
6
30
12
10
3
B mecha
A mecha
A
B
C
D

Electrical parts list

■ Electrical parts list (Power AMP.&Source select board) Block No. 01

⚠	Item	Parts number	Parts name	Remarks	Area
	C 201	QFV72AJ-104Z	M.CAPACITOR	.10MF 5% 100V	
	C 202	QFV72AJ-104Z	M.CAPACITOR	.10MF 5% 100V	
	C 203	QFV72AJ-104Z	M.CAPACITOR	.10MF 5% 100V	
	C 204	QEZ0469-478	E.CAPACITOR	4700MF	
	C 205	QEZ0469-478	E.CAPACITOR	4700MF	
	C 211	QFVJ1HJ-104Z	TF CAPACITOR	.10MF 5% 50V	
	C 212	QFVJ1HJ-104Z	TF CAPACITOR	.10MF 5% 50V	
	C 213	QFVJ1HJ-104Z	TF CAPACITOR	.10MF 5% 50V	
	C 214	EETB1VM-228JC	E.CAPACITOR		
	C 215	EETB1VM-228JC	E.CAPACITOR		
	C 216	QETN1VM-107Z	E CAPACITOR	100MF 20% 35V	
	C 217	QETN1JM-476Z	E CAPACITOR	47MF 20% 63V	
	C 218	EETC1HM-226ZJC	E.CAPACITOR		
	C 219	QDYB1CM-103Y	C.CAPACITOR		
	C 220	EETC1HM-226ZJC	E.CAPACITOR		
	C 221	EETC1HM-475ZJC	E.CAPACITOR		
	C 222	EETC1HM-475ZJC	E.CAPACITOR		
	C 223	EETC1HM-226ZJC	E.CAPACITOR		
	C 233	QFVJ1HJ-224Z	CAPACITOR	.22MF 5% 50V	UP,US,UX
	C 233	QFLM1HJ-103Z	M.CAPACITOR	.010MF 5% 50V	A
	C 401	QCBB1HK-221Y	C CAPACITOR	220PF 10% 50V	A
	C 402	QCBB1HK-221Y	C CAPACITOR	220PF 10% 50V	A
	C 403	QETN1AM-477Z	E CAPACITOR	470MF 20% 10V	
	C 404	QETN1CM-476Z	E CAPACITOR	47MF 20% 16V	
	C 411	QCBB1HK-221Y	C CAPACITOR	220PF 10% 50V	
	C 412	QCBB1HK-221Y	C CAPACITOR	220PF 10% 50V	
	C 415	QDXB1CM-222Y	C CAPACITOR		A
	C 415	QDGB1HK-102Y	C CAPACITOR		UP,US,UX
	C 426	QDVB1EZ-223Y	C CAPACITOR		A
	C 427	EETC1EM-106ZJC	E CAPACITOR		A
	C 432	QFLM1HJ-102Z	M CAPACITOR	1000PF 5% 50V	A
	C 433	QFLM1HJ-103Z	M CAPACITOR	.010MF 5% 50V	A
	C 436	EETC1AM-107ZJC	E CAPACITOR		
	C 437	EETC1EM-106ZJC	E CAPACITOR		
	C 438	QDYB1CM-103Y	C CAPACITOR		
	C 439	QETN1EM-106Z	E CAPACITOR	10MF 20% 25V	
	C 440	QETN1EM-106Z	E CAPACITOR	10MF 20% 25V	
	C 441	QTE1V06-106Z	E CAPACITOR		
	C 442	QTE1V06-106Z	E CAPACITOR		
	C 443	QETN1HM-225Z	E CAPACITOR	2.2MF 20% 50V	
	C 444	QETN1HM-225Z	E CAPACITOR	2.2MF 20% 50V	
	C 445	QETN1EM-106Z	E CAPACITOR	10MF 20% 25V	
	C 446	QETN1EM-106Z	E CAPACITOR	10MF 20% 25V	
	C 447	QTE1V06-106Z	E CAPACITOR		
	C 448	QTE1V06-106Z	E CAPACITOR		
	C 449	QETN1HM-225Z	E CAPACITOR	2.2MF 20% 50V	
	C 450	QETN1HM-225Z	E CAPACITOR	2.2MF 20% 50V	
	C 453	QFVJ1HJ-154Z	TF CAPACITOR	.15MF 5% 50V	
	C 454	QFVJ1HJ-154Z	TF CAPACITOR	.15MF 5% 50V	
	C 455	QFVJ1HJ-274Z	CAPACITOR	.27MF 5% 50V	
	C 456	QFVJ1HJ-274Z	CAPACITOR	.27MF 5% 50V	
	C 457	QFLM1HJ-223Z	M CAPACITOR	.022MF 5% 50V	
	C 458	QFLM1HJ-223Z	M CAPACITOR	.022MF 5% 50V	
	C 459	QFLM1HJ-183Z	M CAPACITOR	.018MF 5% 50V	
	C 460	QFLM1HJ-183Z	M CAPACITOR	.018MF 5% 50V	
	C 461	QFLM1HJ-562Z	M CAPACITOR	5600PF 5% 50V	
	C 462	QFLM1HJ-562Z	M CAPACITOR	5600PF 5% 50V	
	C 466	QETN1HM-475Z	E CAPACITOR	4.7MF 20% 50V	UP,US,UX
	C 467	QETN1HM-225Z	E CAPACITOR	2.2MF 20% 50V	UP,US,UX
	C 468	EETC1EM-226ZJC	E CAPACITOR		UP,US,UX
	C 469	QFLM1HJ-683Z	M CAPACITOR	.068MF 5% 50V	UP,US,UX
	C 470	QFVJ1HJ-274Z	CAPACITOR	.27MF 5% 50V	UP,US,UX
	C 471	QETN1EM-106Z	E CAPACITOR	10MF 20% 25V	UP,US,UX
	C 472	QETN1EM-106Z	E CAPACITOR	10MF 20% 25V	UP,US,UX

⚠	Item	Parts number	Parts name	Remarks	Area
	C 473	QETN1EM-106Z	E CAPACITOR	10MF 20% 25V	UP,US,UX
	C 474	QETN1EM-106Z	E CAPACITOR	10MF 20% 25V	UP,US,UX
	C 475	EETC1HM-105ZJC	E APACITOR		UP,US,UX
	C 476	QFLM1HJ-682Z	M CAPACITOR	6800PF 5% 50V	UP,US,UX
	C 488	EETC1HM-475ZJC	E CAPACITOR		
	C 526	EETC1AM-107ZJC	E CAPACITOR		
	C 527	QFVJ1HJ-104Z	TF CAPACITOR	.10MF 5% 50V	
	C 528	QFVJ1HJ-104Z	TF CAPACITOR	.10MF 5% 50V	
	C 529	QFVJ1HJ-104Z	TF CAPACITOR	.10MF 5% 50V	
	C 530	QFVJ1HJ-104Z	TF CAPACITOR	.10MF 5% 50V	
	C 531	QTE1C06-476Z	E CAPACITOR		
	C 532	QTE1C06-476Z	E CAPACITOR		
	C 533	QTE1V06-106Z	E CAPACITOR		
	C 534	QTE1V06-106Z	E CAPACITOR		
	C 535	EETC1AM-107ZJC	E CAPACITOR		
	C 579	QETN1HM-474Z	E CAPACITOR	.47MF 20% 50V	
	C 580	QFVJ1HJ-184Z	TF CAPACITOR	.18MF 5% 50V	
	C 581	EETC1HM-105ZJC	E CAPACITOR		
	C 703	QCBB1HK-471Y	C CAPACITOR	470PF 10% 50V	
	C 704	QCBB1HK-471Y	C CAPACITOR	470PF 10% 50V	
	C 705	QCSB1HJ-220Y	C CAPACITOR	22PF 5% 50V	
	C 706	QCSB1HJ-220Y	C CAPACITOR	22PF 5% 50V	
	C 707	QETN1CM-476Z	E CAPACITOR	47MF 20% 16V	
	C 708	QETN1CM-476Z	E CAPACITOR	47MF 20% 16V	
	C 709	QCSB1HJ-100Y	C CAPACITOR	10PF 5% 50V	UP,US,UX
	C 709	QCSB1HK-4R7Y	C CAPACITOR	4.7PF 10% 50V	A
	C 710	QCSB1HJ-100Y	C CAPACITOR	10PF 5% 50V	UP,US,UX
	C 710	QCSB1HK-4R7Y	C CAPACITOR	4.7PF 10% 50V	A
	C 711	QETN1JM-476Z	E CAPACITOR	47MF 20% 63V	
	C 712	QETN1JM-476Z	E CAPACITOR	47MF 20% 63V	
	C 713	QFLM1HJ-473Z	M CAPACITOR	.047MF 5% 50V	
	C 714	QFLM1HJ-473Z	M CAPACITOR	.047MF 5% 50V	
	C 715	QFLM1HJ-473Z	M CAPACITOR	.047MF 5% 50V	
	C 716	QFLM1HJ-473Z	M CAPACITOR	.047MF 5% 50V	
	C 721	QTE1V06-106Z	E CAPACITOR		
	C 722	QTE1V06-106Z	E CAPACITOR		
	C 723	EETC1HM-226ZJC	E CAPACITOR		
	C 726	EETC1EM-106ZJC	E CAPACITOR		
	C 729	EETC1CM-476ZJC	E CAPACITOR		
	C 730	QCF31HZ-223Z	C CAPACITOR	.022MF +80:-20%	
	C 731	QCF31HZ-223Z	C CAPACITOR	.022MF +80:-20%	
	C 732	QDXB1CM-222Y	C.CAPACITOR		
	C 733	QFVJ1HJ-104Z	TF CAPACITOR	.10MF 5% 50V	A
	C 734	QDXB1CM-222Y	C.CAPACITOR		
	C 735	QFVJ1HJ-104Z	TF CAPACITOR	.10MF 5% 50V	A
	C 736	QFLM1HJ-393Z	M CAPACITOR	.039MF 5% 50V	
	C 737	QFLM1HJ-393Z	M CAPACITOR	.039MF 5% 50V	
	C 739	QFLM1HJ-473Z	M CAPACITOR	.047MF 5% 50V	
	C 742	EETC1HM-224ZJC	E.CAPACITOR		
	C 743	QFLM1HJ-823Z	M CAPACITOR	.082MF 5% 50V	
	CNSV1	QGB1214K1-20S	CONNECTOR		
	CNSV2	QGB1214K1-20S	CONNECTOR		
	CNSV3	QGB1214J1-20S	CONNECTOR		
	CNSV4	QGB1214J1-20S	CONNECTOR		
	CNSV5	QGF1205C1-40	CONNECTOR		
	CN315	QGF1205F1-10	CONNECTOR		
	CN612	QGB2510J1-04	CONNECTOR		
	CN701	QGB2510K2-07	CONNECTOR		
	CN702	QGB2510K2-10	CONNECTOR		
	CN711	QGB2510J1-07	CONNECTOR		
	CN712	QGB2510J1-10	CONNECTOR		
	CN870	QGB1214J1-20S	CONNECTOR		
	CN871	QGB1214J1-20S	CONNECTOR		
	CN912	QGD2503F1-05	SOCKET		UP,US,UX

■ **Electrical parts list (Power AMP.&Source select board) Block No. 01**

⚠	Item	Parts number	Parts name	Remarks	Area
	CP431	ICP-N15-T	ICP		
	CP432	ICP-N15-T	ICP		
	C1021	QDYB1CM-103Y	C CAPACITOR		UP,US,UX
	C1022	QDGB1HK-102Y	C CAPACITOR		UP,US,UX
	C1023	QDGB1HK-102Y	C CAPACITOR		UP,US,UX
	C1034	QFVJ1HJ-104Z	TF CAPACITOR	.10MF 5% 50V	UP,US,UX
	C1035	EETC1AM-107ZJC	E CAPACITOR		UP,US,UX
	C1036	QCBB1HK-101Y	C CAPACITOR	100PF 10% 50V	UP,US,UX
	C1037	QDYB1CM-103Y	C CAPACITOR		UP,US,UX
	C1038	QDXB1CM-472Y	C CAPACITOR		UP,US,UX
	C1039	QDYB1CM-103Y	C CAPACITOR		UP,US,UX
	C1040	QDXB1CM-332Y	C CAPACITOR		UP,US,UX
	C1041	QDYB1CM-103Y	C CAPACITOR		UP,US,UX
	C1042	EETC1EM-226ZJC	E CAPACITOR		UP,US,UX
	C1043	QFVJ1HJ-474Z	CAPACITOR	.47MF 5% 50V	UP,US,UX
	C1044	QDYB1CM-103Y	C CAPACITOR		UP,US,UX
	C1045	QETN1HM-225Z	E CAPACITOR	2.2MF 20% 50V	UP,US,UX
	C1061	QETN1AM-227Z	E CAPACITOR	220MF 20% 10V	UP,US,UX
	C1062	EETC1AM-107ZJC	E CAPACITOR		UP,US,UX
	C1063	EETC1HM-475ZJC	E CAPACITOR		UP,US,UX
	C1064	QCBB1HK-151Y	C CAPACITOR	150PF 10% 50V	UP,US,UX
	C1065	QCBB1HK-151Y	C CAPACITOR	150PF 10% 50V	UP,US,UX
	C1066	QCBB1HK-331Y	C CAPACITOR	330PF 10% 50V	UP,US,UX
	C1067	QETN1HM-225Z	E CAPACITOR	2.2MF 20% 50V	UP,US,UX
	C1068	QETN1HM-224Z	E CAPACITOR	.22MF 20% 50V	UP,US,UX
	C1069	QETN1HM-475Z	E CAPACITOR	4.7MF 20% 50V	UP,US,UX
⚠	D 201	1N5402M-20	DIODE		
⚠	D 202	1N5402M-20	DIODE		
⚠	D 203	1N5402M-20	DIODE		
⚠	D 204	1N5402M-20	DIODE		
⚠	D 211	30DF2-FC	DIODE		
⚠	D 212	30DF2-FC	DIODE		
⚠	D 213	30DF2-FC	DIODE		
⚠	D 214	30DF2-FC	DIODE		
⚠	D 217	1N4003S-T5	SI DIODE		
⚠	D 218	1N4003S-T5	SI DIODE		
	D 219	MTZJ33C-T2	Z DIODE		
	D 220	MTZJ9.1B-T2	ZENER DIODE		
	D 221	MTZJ5.1B-T2	ZENER DIODE		
	D 223	1SS133-T2	SI DIODE		
⚠	D 227	1N4003S-T5	SI DIODE		
	D 411	1SS133-T2	SI DIODE		
	D 412	1SS133-T2	SI DIODE		
	D 426	MTZJ5.1B-T2	ZENER DIODE		A
	D 431	1SS133-T2	SI DIODE		
	D 432	1SS133-T2	SI DIODE		
	D 433	1SS133-T2	SI DIODE		
	D 434	MTZJ5.1B-T2	ZENER DIODE		
	D 573	1SS133-T2	SI DIODE		
	D 703	MTZJ15C-T2	Z DIODE		
	D 704	MTZJ15C-T2	Z DIODE		
	D 719	1SS133-T2	SI DIODE		
	D 720	1SS133-T2	SI DIODE		
	D 722	MTZJ15C-T2	Z DIODE		
	D 723	MTZJ33C-T2	Z DIODE		
	D 724	MTZJ33C-T2	Z DIODE		
	D 725	1SS133-T2	SI DIODE		
	D 728	1SS133-T2	SI DIODE		
	D 742	MTZJ2.4B-T2	Z.DIODE		
	D1021	MTZJ5.1B-T2	ZENER DIODE		UP,US,UX
	D1061	1SS133-T2	SI DIODE		UP,US,UX
	FT111	QNG0020-001Z	FUSE CLIP		
	FT112	QNG0020-001Z	FUSE CLIP		
	FT131	QNG0020-001Z	FUSE CLIP		US,UX

⚠	Item	Parts number	Parts name	Remarks	Area
	FT132	QNG0020-001Z	FUSE CLIP		US,UX
	FT511	QNG0020-001Z	FUSE CLIP		
	FT512	QNG0020-001Z	FUSE CLIP		
	FT521	QNG0020-001Z	FUSE CLIP		
	FT522	QNG0020-001Z	FUSE CLIP		
	FW431	QUM156-14Z4Z4	FLAT WIRE		
	FW703	QUM156-14BFZ4	FLAT WIRE		
	FW704	QUM154-15BFZ4	FLAT WIRE		
	FW705	QUM156-11Z4Z4	FLAT WIRE		
	FW902	QUM155-32BFZ4	FLAT WIRE	CONSTRUCTION ST	UP,US,UX
	IC436	TDA7439	IC		
	IC466	BA3837	IC(VOCALFADER)		UP,US,UX
	IC526	BA15218	IC		
⚠	IC701	STK412-000	IC(HYBRID)		
	IC901	NJM4580L	IC		UP,US,UX
	IC902	BU9253AS	IC		UP,US,UX
	J 81	QNB0098-001	SPK TERMINAL		
	J 411	QNN0117-001	PIN JACK		
	J 426	GP1FA550TZ	OPT TRANSMITTER		A
	J1021	QNS0080-001	6.3 JACK		UP,US,UX
	J1022	QNS0080-001	6.3 JACK		UP,US,UX
	L 201	QQR0779-001Z	INDUCTOR		A
	L 401	QQR0779-001Z	INDUCTOR		A
	L 701	QQLZ005-R45	INDUCTOR		
	L 702	QQLZ005-R45	INDUCTOR		
	Q 201	KTA1023/OY/-T	TRANSISTOR		
	Q 203	KRC107M-T	D.TRANSISTOR		
	Q 204	KTC3199/GL/-T	TRANSISTOR		
	Q 240	KTC3199/GL/-T	TRANSISTOR		
	Q 401	2SC3576-JVC-T	TRANSISTOR		
	Q 402	2SC3576-JVC-T	TRANSISTOR		
	Q 481	2SC3576-JVC-T	TRANSISTOR		
	Q 483	KRA102M-T	D.TRANSISTOR		
	Q 559	2SC3576-JVC-T	TRANSISTOR		
	Q 561	2SC3576-JVC-T	TRANSISTOR		
	Q 562	2SC3576-JVC-T	TRANSISTOR		
	Q 571	2SC2785/FE/-T	TRANSISTOR		
	Q 572	2SC2785/FE/-T	TRANSISTOR		
	Q 573	2SC2785/FE/-T	TRANSISTOR		
	Q 574	2SC2785/FE/-T	TRANSISTOR		
	Q 575	2SC2785/FE/-T	TRANSISTOR		
	Q 576	2SC2785/FE/-T	TRANSISTOR		
	Q 577	KRC111M-T	D.TRANSISTOR		
	Q 578	KRC111M-T	D.TRANSISTOR		
	Q 579	KRC111M-T	D.TRANSISTOR		
	Q 580	KRC111M-T	D.TRANSISTOR		
	Q 581	KRC111M-T	D.TRANSISTOR		
	Q 582	KRC111M-T	D.TRANSISTOR		
	Q 701	KTA1268/GL/-T	TRANSISTOR		
	Q 702	KTA1268/GL/-T	TRANSISTOR		
	Q 710	KTA1268/GL/-T	TRANSISTOR		
	Q 711	KTC3200/GL/-T	TRANSISTOR		
	Q 712	KTA1268/GL/-T	TRANSISTOR		
	Q 713	KTC3200/GL/-T	D.TRANSISTOR		
	Q 726	2SC2389S/SE/-T	TRANSISTOR		
	Q 727	KTA1268/GL/-T	TRANSISTOR		
	Q 728	KTC3199/GL/-T	TRANSISTOR		
	Q 733	2SC3576-JVC-T	TRANSISTOR		
	Q 734	2SC3576-JVC-T	TRANSISTOR		
	Q 735	2SC3576-JVC-T	TRANSISTOR		
	Q 736	2SC3576-JVC-T	TRANSISTOR		
	Q 737	KRA111M-T	D.TRANSISTOR		
	Q 742	2SK301/PQ/-T	TRANSISTOR(FET)		
	Q1021	KRA111M-T	D.TRANSISTOR		UP,US,UX

■ **Electrical parts list (Power AMP.&Source select board) Block No. 01**

⚠	Item	Parts number	Parts name	Remarks	Area
	Q1022	KRA111M-T	D.TRANSISTOR		UP,US,UX
	Q1023	KRA111M-T	D.TRANSISTOR		UP,US,UX
	Q1061	2SD2144S/VW/-T	TRANSISTOR		UP,US,UX
⚠	R 202	QRZ9042-2R2X	F.RESISTOR	2.2 1/0W	
	R 203	QRE141J-302Y	C RESISTOR	3.0K 5% 1/4W	
	R 204	QRE141J-223Y	C RESISTOR	22K 5% 1/4W	
	R 205	QRE141J-104Y	C RESISTOR	100K 5% 1/4W	
	R 206	QRE141J-562Y	C RESISTOR	5.6K 5% 1/4W	
	R 207	QRE141J-103Y	C RESISTOR	10K 5% 1/4W	
	R 209	QRE141J-103Y	C RESISTOR	10K 5% 1/4W	
	R 210	QRE141J-472Y	C RESISTOR	4.7K 5% 1/4W	
	R 211	QRE141J-103Y	C RESISTOR	10K 5% 1/4W	
	R 215	QRE141J-473Y	C RESISTOR	47K 5% 1/4W	
	R 216	QRE141J-473Y	C RESISTOR	47K 5% 1/4W	
⚠	R 233	QRK126J-470X	C RESISTOR	47 5% 1/2W	
⚠	R 234	QRK126J-470X	C RESISTOR	47 5% 1/2W	
	R 242	QRE141J-103Y	C RESISTOR	10K 5% 1/4W	
	R 245	QRE141J-103Y	C RESISTOR	10K 5% 1/4W	
	R 401	QRE141J-102Y	C RESISTOR	1.0K 5% 1/4W	
	R 402	QRE141J-102Y	C RESISTOR	1.0K 5% 1/4W	
	R 403	QRE141J-472Y	C RESISTOR	4.7K 5% 1/4W	
	R 404	QRE141J-472Y	C RESISTOR	4.7K 5% 1/4W	
	R 405	QRE141J-222Y	C RESISTOR	2.2K 5% 1/4W	
	R 406	QRE141J-222Y	C RESISTOR	2.2K 5% 1/4W	
	R 407	QRE141J-272Y	C RESISTOR	2.7K 5% 1/4W	
	R 411	QRE141J-103Y	C RESISTOR	10K 5% 1/4W	
	R 412	QRE141J-103Y	C RESISTOR	10K 5% 1/4W	
	R 413	QRE141J-683Y	C RESISTOR	68K 5% 1/4W	
	R 414	QRE141J-683Y	C RESISTOR	68K 5% 1/4W	
	R 426	QRE141J-391Y	C RESISTOR	390 5% 1/4W	A
	R 431	QRE141J-303Y	C RESISTOR	30K 5% 1/4W	
	R 432	QRE141J-303Y	C RESISTOR	30K 5% 1/4W	
	R 434	QRJ146J-4R7X	UNF C.RESISTOR	4.7 5% 1/4W	
	R 435	QRE141J-103Y	C RESISTOR	10K 5% 1/4W	
	R 436	QRE141J-103Y	C RESISTOR	10K 5% 1/4W	
	R 437	QRE141J-102Y	C RESISTOR	1.0K 5% 1/4W	
	R 438	QRE141J-272Y	C RESISTOR	2.7K 5% 1/4W	
	R 439	QRE141J-562Y	C RESISTOR	5.6K 5% 1/4W	
	R 440	QRE141J-562Y	C RESISTOR	5.6K 5% 1/4W	
	R 441	QRE141J-272Y	C RESISTOR	2.7K 5% 1/4W	
	R 442	QRE141J-103Y	C RESISTOR	10K 5% 1/4W	
	R 443	QRE141J-104Y	C RESISTOR	100K 5% 1/4W	
	R 444	QRE141J-104Y	C RESISTOR	100K 5% 1/4W	
	R 466	QRE141J-201Y	C RESISTOR	200 5% 1/4W	UP,US,UX
	R 467	QRE141J-203Y	C RESISTOR	20K 5% 1/4W	UP,US,UX
	R 468	QRE141J-203Y	C RESISTOR	20K 5% 1/4W	UP,US,UX
	R 469	QRE141J-562Y	C RESISTOR	5.6K 5% 1/4W	UP,US,UX
	R 470	QRE141J-562Y	C RESISTOR	5.6K 5% 1/4W	UP,US,UX
	R 471	QRE141J-223Y	C RESISTOR	22K 5% 1/4W	UP,US,UX
	R 472	QRE141J-102Y	C RESISTOR	1.0K 5% 1/4W	UP,US,UX
	R 473	QRE141J-682Y	C RESISTOR	6.8K 5% 1/4W	UP,US,UX
	R 474	QRE141J-513Y	C RESISTOR	51K 5% 1/4W	UP,US,UX
	R 475	QRE141J-101Y	C RESISTOR	100 5% 1/4W	UP,US,UX
	R 489	QRE141J-102Y	C RESISTOR	1.0K 5% 1/4W	
	R 491	QRE141J-102Y	C RESISTOR	1.0K 5% 1/4W	
	R 493	QRE141J-103Y	C RESISTOR	10K 5% 1/4W	
	R 496	QRE141J-102Y	C RESISTOR	1.0K 5% 1/4W	
	R 497	QRE141J-103Y	C RESISTOR	10K 5% 1/4W	
	R 526	QRE141J-101Y	C RESISTOR	100 5% 1/4W	
	R 527	QRE141J-222Y	C RESISTOR	2.2K 5% 1/4W	
	R 528	QRE141J-222Y	C RESISTOR	2.2K 5% 1/4W	
	R 529	QRE141J-332Y	C RESISTOR	3.3K 5% 1/4W	
	R 530	QRE141J-332Y	C RESISTOR	3.3K 5% 1/4W	
	R 533	QRE141J-204Y	C RESISTOR	200K 5% 1/4W	

⚠	Item	Parts number	Parts name	Remarks	Area
	R 534	QRE141J-204Y	C RESISTOR	200K 5% 1/4W	
	R 535	QRE141J-113Y	C RESISTOR	11K 5% 1/4W	
	R 536	QRE141J-113Y	C RESISTOR	11K 5% 1/4W	
	R 537	QRE141J-101Y	C RESISTOR	100 5% 1/4W	
	R 551	QRE141J-102Y	C RESISTOR	1.0K 5% 1/4W	
	R 552	QRE141J-102Y	C RESISTOR	1.0K 5% 1/4W	
	R 553	QRE141J-223Y	C RESISTOR	22K 5% 1/4W	
	R 554	QRE141J-223Y	C RESISTOR	22K 5% 1/4W	
	R 560	QRE141J-102Y	C RESISTOR	1.0K 5% 1/4W	
	R 561	QRE141J-103Y	C RESISTOR	10K 5% 1/4W	
	R 562	QRE141J-103Y	C RESISTOR	10K 5% 1/4W	
	R 581	QRE141J-224Y	C RESISTOR	220K 5% 1/4W	
	R 582	QRE141J-101Y	C RESISTOR	100 5% 1/4W	
	R 583	QRE141J-101Y	C RESISTOR	100 5% 1/4W	
	R 584	QRE141J-222Y	C RESISTOR	2.2K 5% 1/4W	
	R 585	QRE141J-242Y	C RESISTOR	2.4K 5% 1/4W	
	R 586	QRE141J-274Y	C RESISTOR	270K 5% 1/4W	
	R 587	QRE141J-124Y	C RESISTOR	120K 5% 1/4W	
	R 588	QRE141J-224Y	C RESISTOR	220K 5% 1/4W	
	R 589	QRE141J-101Y	C RESISTOR	100 5% 1/4W	
	R 590	QRE141J-101Y	C RESISTOR	100 5% 1/4W	
	R 593	QRE141J-243Y	C RESISTOR	24K 5% 1/4W	
	R 594	QRE141J-243Y	C RESISTOR	24K 5% 1/4W	
	R 595	QRE141J-433Y	C RESISTOR	43K 5% 1/4W	
	R 596	QRE141J-433Y	C RESISTOR	43K 5% 1/4W	
	R 597	QRE141J-104Y	C RESISTOR	100K 5% 1/4W	
	R 598	QRE141J-104Y	C RESISTOR	100K 5% 1/4W	
	R 701	QRJ146J-470X	UNF C.RES	47 5% 1/4W	
	R 702	QRJ146J-470X	UNF C.RESISTOR	47 5% 1/4W	
	R 703	QRE141J-563Y	C RESISTOR	56K 5% 1/4W	
	R 704	QRE141J-563Y	C RESISTOR	56K 5% 1/4W	
	R 705	QRJ146J-821X	UNF C.RESISTOR	820 5% 1/4W	
	R 706	QRJ146J-821X	UNF C.RESISTOR	820 5% 1/4W	
	R 707	QRE141J-563Y	C RESISTOR	56K 5% 1/4W	
	R 708	QRE141J-563Y	C RESISTOR	56K 5% 1/4W	
	R 713	QRJ146J-100X	UNF.C RESISTOR	10 5% 1/4W	
	R 714	QRJ146J-100X	UNF.C RESISTOR	10 5% 1/4W	
	R 715	QRJ146J-100X	UNF.C RESISTOR	10 5% 1/4W	
	R 716	QRJ146J-100X	UNF.C RESISTOR	10 5% 1/4W	
	R 717	QRE141J-102Y	C RESISTOR	1.0K 5% 1/4W	
	R 718	QRE141J-102Y	C RESISTOR	1.0K 5% 1/4W	
	R 719	QRE141J-562Y	C RESISTOR	5.6K 5% 1/4W	
	R 720	QRE141J-562Y	C RESISTOR	5.6K 5% 1/4W	
	R 721	QRE141J-103Y	C RESISTOR	10K 5% 1/4W	
	R 722	QRE141J-103Y	C RESISTOR	10K 5% 1/4W	
	R 723	QRE141J-152Y	C RESISTOR	1.5K 5% 1/4W	
	R 724	QRE141J-152Y	C RESISTOR	1.5K 5% 1/4W	
	R 725	QRE141J-823Y	C RESISTOR	82K 5% 1/4W	
	R 726	QRE141J-104Y	C RESISTOR	100K 5% 1/4W	
	R 727	QRE141J-104Y	C RESISTOR	100K 5% 1/4W	
	R 728	QRE141J-103Y	C RESISTOR	10K 5% 1/4W	
	R 729	QRE141J-104Y	C RESISTOR	100K 5% 1/4W	
	R 730	QRE141J-103Y	C RESISTOR	10K 5% 1/4W	
⚠	R 731	QRJ146J-4R7X	UNF C.RESISTOR	4.7 5% 1/4W	
⚠	R 732	QRJ146J-4R7X	UNF C.RESISTOR	4.7 5% 1/4W	
	R 733	QRE141J-472Y	C RESISTOR	4.7K 5% 1/4W	
	R 734	QRE141J-472Y	C RESISTOR	4.7K 5% 1/4W	
	R 735	QRE141J-472Y	C RESISTOR	4.7K 5% 1/4W	
	R 736	QRE141J-472Y	C RESISTOR	4.7K 5% 1/4W	
	R 739	QRL01DJ-821X	OMF RESISTOR	820 5% 1/1W	
	R 740	QRL01DJ-821X	OMF RESISTOR	820 5% 1/1W	
	R 742	QRE141J-473Y	C RESISTOR	47K 5% 1/4W	
	R 743	QRE141J-153Y	C RESISTOR	15K 5% 1/4W	
	R 744	QRE141J-475Y	C RESISTOR	4.7M 5% 1/4W	

■ **Electrical parts list (Power AMP.&Source select board) Block No. 01**

⚠	Item	Parts number	Parts name	Remarks	Area
	R 745	QRE141J-105Y	C RESISTOR	1.0M 5% 1/4W	
	R 746	QRE141J-392Y	C RESISTOR	3.9K 5% 1/4W	
	R 747	QRE141J-203Y	C RESISTOR	20K 5% 1/4W	
	R 748	QRE141J-103Y	C RESISTOR	10K 5% 1/4W	
	R 750	QRJ146J-470X	UNF C.RESISTOR	47 5% 1/4W	
	R 753	QRZ0196-R22	EMIT.RESISTOR	1/1W	
	R 754	QRZ0196-R22	EMIT.RESISTOR	1/1W	
	R 761	QRE141J-102Y	C RESISTOR	1.0K 5% 1/4W	
	R 762	QRE141J-102Y	C RESISTOR	1.0K 5% 1/4W	
	R 766	QRE141J-333Y	C RESISTOR	33K 5% 1/4W	
	R 767	QRE141J-103Y	C RESISTOR	10K 5% 1/4W	
	R 768	QRE141J-103Y	C RESISTOR	10K 5% 1/4W	
⚠	R 774	QRJ146J-100X	UNF.C RESISTOR	10 5% 1/4W	
	R 775	QRE141J-102Y	C RESISTOR	1.0K 5% 1/4W	
	R 776	QRE141J-102Y	C RESISTOR	1.0K 5% 1/4W	
	R 777	QRE141J-103Y	C RESISTOR	10K 5% 1/4W	
	R 778	QRE141J-103Y	C RESISTOR	10K 5% 1/4W	
	R 784	QRE141J-823Y	C RESISTOR	82K 5% 1/4W	
	R 785	QRE141J-823Y	C RESISTOR	82K 5% 1/4W	
	R 786	QRE141J-103Y	C RESISTOR	10K 5% 1/4W	
	R 787	QRE141J-103Y	C RESISTOR	10K 5% 1/4W	
	RY 1	QSK0095-001	RELAY		
	R1021	QRE141J-472Y	C RESISTOR	4.7K 5% 1/4W	UP,US,UX
	R1022	QRE141J-472Y	C RESISTOR	4.7K 5% 1/4W	UP,US,UX
	R1031	QRE141J-203Y	C RESISTOR	20K 5% 1/4W	UP,US,UX
	R1032	QRE141J-203Y	C RESISTOR	20K 5% 1/4W	UP,US,UX
	R1033	QRE141J-822Y	C RESISTOR	8.2K 5% 1/4W	UP,US,UX
	R1034	QRE141J-103Y	C RESISTOR	10K 5% 1/4W	UP,US,UX
	R1035	QRE141J-333Y	C RESISTOR	33K 5% 1/4W	UP,US,UX
	R1036	QRE141J-392Y	C RESISTOR	3.9K 5% 1/4W	UP,US,UX
	R1037	QRE141J-153Y	C RESISTOR	15K 5% 1/4W	UP,US,UX
	R1038	QRE141J-472Y	C RESISTOR	4.7K 5% 1/4W	UP,US,UX
	R1039	QRE141J-103Y	C RESISTOR	10K 5% 1/4W	UP,US,UX
	R1040	QRE141J-272Y	C RESISTOR	2.7K 5% 1/4W	UP,US,UX
	R1041	QRE141J-203Y	C RESISTOR	20K 5% 1/4W	UP,US,UX
	R1042	QRE141J-221Y	C RESISTOR	220 5% 1/4W	UP,US,UX
	R1043	QRE141J-203Y	C RESISTOR	20K 5% 1/4W	UP,US,UX
	R1044	QRE141J-562Y	C RESISTOR	5.6K 5% 1/4W	UP,US,UX
	R1045	QRE141J-102Y	C RESISTOR	1.0K 5% 1/4W	UP,US,UX
	R1061	QRE141J-103Y	C RESISTOR	10K 5% 1/4W	UP,US,UX
	R1062	QRE141J-123Y	C RESISTOR	12K 5% 1/4W	UP,US,UX
	R1063	QRE141J-391Y	C RESISTOR	390 5% 1/4W	UP,US,UX
	R1064	QRE141J-152Y	C RESISTOR	1.5K 5% 1/4W	UP,US,UX
	R1065	QRE141J-101Y	C RESISTOR	100 5% 1/4W	UP,US,UX
	R1066	QRE141J-475Y	C RESISTOR	4.7M 5% 1/4W	UP,US,UX
	R1067	QRE141J-560Y	C RESISTOR	56 5% 1/4W	UP,US,UX
	R1068	QRE141J-203Y	C RESISTOR	20K 5% 1/4W	UP,US,UX
	R1069	QRE141J-102Y	C RESISTOR	1.0K 5% 1/4W	UP,US,UX
	R1070	QRE141J-561Y	C RESISTOR	560 5% 1/4W	UP,US,UX
	R1071	QRE141J-472Y	C RESISTOR	4.7K 5% 1/4W	UP,US,UX
	R1072	QRE141J-472Y	C RESISTOR	4.7K 5% 1/4W	UP,US,UX
	R1073	QRE141J-103Y	C RESISTOR	10K 5% 1/4W	UP,US,UX
	R1074	QRE141J-152Y	C RESISTOR	1.5K 5% 1/4W	UP,US,UX
	S 500	QSW0812-001	VOLTAGE SWITCH		US,UX
	SP434	E3400-431	SPACER		
	SP701	E3400-439	FELT SPACER		
	SP702	E3400-439	FELT SPACER		
	SP711	E3400-439	FELT SPACER		
	SP712	E3400-439	FELT SPACER		
	TB101	QNZ0079-001Z	TAB		
	TB102	QNZ0079-001Z	TAB		
	VR901	QVQ0045-B54	V RESISTOR		UP,US,UX

■ Electrical parts list (System control board)

Block No. 02

⚠	Item	Parts number	Parts name	Remarks	Area
	C 360	QTE1C06-476Z	E CAPACITOR		
	C 361	QDYB1CM-103Y	C CAPACITOR		
	C 362	EETC1HM-226ZJC	E CAPACITOR		
	C 366	EETC1HM-226ZJC	E CAPACITOR		
	C 367	QDYB1CM-103Y	C CAPACITOR		
	C 370	QDYB1CM-103Y	C CAPACITOR		
	C 371	EETC1HM-226ZJC	E CAPACITOR		
	C 372	EETC1HM-226ZJC	E CAPACITOR		
	C 373	QDYB1CM-103Y	C CAPACITOR		
	C 374	EETC1HM-226ZJC	E CAPACITOR		
	C 801	QFLM1HJ-103Z	M CAPACITOR	.010MF 5% 50V	
	C 803	QETN0JM-477Z	E CAPACITOR	470MF 20% 6.3V	
	C 804	QETN0JM-108Z	E CAPACITOR	1000MF 20% 6.3V	
	C 805	QDGB1HK-102Y	C CAPACITOR		
	C 806	QDGB1HK-102Y	C CAPACITOR		
	C 807	QCS11HJ-390	C CAPACITOR	39PF 5% 50V	
	C 808	QCS11HJ-330	C CAPACITOR	33PF 5% 50V	
	C 809	QCS11HJ-330	C CAPACITOR	33PF 5% 50V	
	C 810	QCS11HJ-390	C CAPACITOR	39PF 5% 50V	
	C 811	QDGB1HK-102Y	C CAPACITOR		
	C 812	QCS11HJ-220	C CAPACITOR	22PF 5% 50V	
	C 813	QCS11HJ-270	C CAPACITOR	27PF 5% 50V	
	C 814	QETN0JM-108Z	E CAPACITOR	1000MF 20% 6.3V	
	C 815	EETC1HM-226ZJC	E CAPACITOR		
	C 816	EETC1CM-476ZJC	E CAPACITOR		
	C 817	EETC1HM-226ZJC	E CAPACITOR		
	C 818	QCBB1HK-221Y	C CAPACITOR	220PF 10% 50V	
	C 820	QCZ0205-155Z	ML C CAPACITOR	1.5MF	
	C 821	QDYB1CM-103Y	C CAPACITOR		
	C 823	QFVJ1HJ-334Z	M CAPACITOR	.33MF 5% 50V	
	C 831	QDYB1CM-103Y	C CAPACITOR		
	C 832	QDYB1CM-103Y	C CAPACITOR		
	C 834	EETC1HM-226ZJC	E CAPACITOR		
	C 835	QDGB1HK-102Y	C CAPACITOR		
	C 855	QETN0JM-227Z	E CAPACITOR	220MF 20% 6.3V	
	C 856	EETC1AM-107ZJC	E CAPACITOR		
	C 857	EETC1CM-476ZJC	E CAPACITOR		
	C 862	EETC1HM-475ZJC	E CAPACITOR		
	C 870	QDYB1CM-103Y	C.CAPACITOR		
	C 871	EETC1HM-475ZJC	E.CAPA. I.M		
	C 872	EETC1HM-224ZJC	E CAPACITOR		
	C 876	EETC1HM-105ZJC	E CAPACITOR		
	C 877	QDGB1HK-681Y	C CAPACITOR		
	C 878	QDXB1CM-182Y	C CAPACITOR		
	C 879	QCS11HJ-330	C CAPACITOR	33PF 5% 50V	
	C 880	QFLM1HJ-153Z	M CAPACITOR	.015MF 5% 50V	
	C 881	QETN1EM-106Z	E CAPACITOR	10MF 20% 25V	
	C 882	QETN1EM-106Z	E CAPACITOR	10MF 20% 25V	
	C 883	QFVJ1HJ-104Z	TF CAPACITOR	.10MF 5% 50V	
	C 884	QETN1AM-227Z	E CAPACITOR	220MF 20% 10V	
	C 885	QFLM1HJ-103Z	M CAPACITOR	.010MF 5% 50V	
	C 886	QFLM1HJ-103Z	M CAPACITOR	.010MF 5% 50V	
	C 887	QFVJ1HJ-104Z	TF CAPACITOR	.10MF 5% 50V	
	C 889	EETC1HM-105ZJC	E CAPACITOR		
	C 890	QDGB1HK-102Y	C CAPACITOR		
	C 950	QDYB1CM-103Y	C.CAPACITOR		
	C 951	QDYB1CM-103Y	C.CAPACITOR		
	C 991	QDYB1CM-103Y	C CAPACITOR		
	C 992	QDYB1CM-103Y	C CAPACITOR		
	CN602	QGB2510K2-04	CONNECTOR		
	CN713	QGD2503F1-06	4P PLUG ASSY		
	CN815	QGD2504C1-03Z	WIRE TRAP CONNE		
	CN850	QGD2504C1-03Z	WIRE TRAP CONNE		
	CN851	QGD2504C1-04Z	WIRE TRAP CONNE		

⚠	Item	Parts number	Parts name	Remarks	Area
	CN860	QGB1214K1-20S	CONNECTOR		
	CN861	QGB1214K1-20S	CONNECTOR		
	CN862	QGD2504C1-03Z	WIRE TRAP CONNE		
	CN863	QGD2504C1-03Z	WIRE TRAP CONNE		
	CN865	QGF1205C1-09	CONNECTOR		
	CN867	QGA2501C1-02	2P CONNECTOR		
	CN868	QGF1016C1-19	CONNECTOR		
	CN869	QGF1205C1-11	CONNECTOR		
	CN879	QGF1031C1-09S	FFC/FPC CONNE		
	CN880	QGF1205C1-11	CONNECTOR		
	CN883	QGD2504C1-03Z	WIRE TRAP CONNE		
	CN884	QGD2504C1-03Z	WIRE TRAP CONNE		
	CN900	QGD2504C1-04Z	WIRE TRAP CONNE		
	CN901	QGD2504C1-04Z	WIRE TRAP CONNE		
	CN905	QGF1205C1-11	CONNECTOR		
	CN906	QGF1205C1-11	CONNECTOR		
	CN979	QGF1016F1-09	CONNECTOR		
	CN990	QGF1205F1-11	CONNECTOR		
	C1001	QDXB1CM-392Y	C CAPACITOR		A
	C1002	QDXB1CM-392Y	C CAPACITOR		A
	C1003	QDXB1CM-222Y	C CAPACITOR		A
	C1003	QDGB1HK-102Y	C CAPACITOR		UP,US,UX
	C1004	QDGB1HK-102Y	C CAPACITOR		
	C1005	QDGB1HK-102Y	C CAPACITOR		
	C1006	QDGB1HK-102Y	C CAPACITOR		
	D 360	MTZJ5.1B-T2	ZENER DIODE		
	D 361	MTZJ11C-T2	Z.DIODE I.M		
	D 362	MTZJ6.8C-T2	Z DIODE I/M		
	D 365	MTZJ9.1B-T2	ZENER DIODE		
	D 366	MTZJ11C-T2	Z.DIODE		
	D 367	MTZJ10C-T2	Z.DIODE		
	D 368	MTZJ11C-T2	Z.DIODE		
	D 369	MTZJ10C-T2	Z.DIODE		
	D 370	MTZJ11C-T2	Z.DIODE		
	D 801	1N4003S-T5	SI DIODE		
	D 803	1SS119-02-T2	SI DIODE		
	D 804	1SS133-T2	SI DIODE		
	D 805	1SS133-T2	SI DIODE		
	D 831	MTZJ5.1B-T2	ZENER DIODE		
	D 832	MTZJ5.1B-T2	ZENER DIODE		
	D 853	MTZJ8.2C-T2	ZENER DIODE		
	D 860	1SS133-T2	SI DIODE		
	D 871	1SS133-T2	SI DIODE		
	D 872	1SS133-T2	SI DIODE		
	D 873	1SS133-T2	SI DIODE		
	D 955	SLR-342MC-T	LED		
	D 956	SLR-342MC-T	LED		
	D 957	SLR-342MC-T	LED		
	D 958	SLR-342MC-T	LED		
	D 961	1SS133-T2	SI DIODE		
	D 962	SLA-370LT3F	LED	POWER LED	
	D 981	SLR-342MC-T	LED		
	D 982	SLR-342MC-T	LED		
	D 983	SLR-342MC-T	LED		
	D 984	SLR-342MC-T	LED		
	EP201	E409182-001SM	GRAND TERMINAL		
	FL801	QLF0074-001	FL TUBE		
	FW850	QUM153-06Z4Z4	FLAT WIRE		
	FW862	QUM026-26DGZ4	FLAT WIRE		
	FW883	QUM026-26DGZ4	FLAT WIRE		
	FW915	QUM153-12BFZ4	FLAT WIRE		
	FW950	QUM157-11BFZ4	FLAT WIRE		
	FW951	QUM154-06Z4Z4	FLAT WIRE		
	FW952	QUM024-16DGZ4	PARA RIBON WIRE		

■ Electrical parts list (System control board)

Block No. 02

⚠	Item	Parts number	Parts name	Remarks	Area
	IC810	MN101C35DEA	IC(MCU)		
	IC811	BU4094BC	IC		
	IC853	LB1641	IC		
	IC915	GP1U281X	IC		
	JS950	QSW0857-001	ROTARY ENCODER		
	JS992	QSW0857-001	ROTARY ENCODER		
	J1001	QNS0159-001	3.5 JACK		
	L 801	QQL29BJ-100Z	INDUCTOR		
	L 802	QQL231K-220Y	INDUCTOR		
	L 803	QQL29BJ-100Z	INDUCTOR		
	L 804	QQR0779-001Z	INDUCTOR		
	L 805	QQL29BJ-100Z	INDUCTOR		
	L 806	QQL29BJ-100Z	INDUCTOR		
	L 807	QQR0779-001Z	INDUCTOR		
	L 808	QQR0779-001Z	INDUCTOR		
	L 851	QQL29BJ-100Z	INDUCTOR		
	L 870	QQR0779-001Z	INDUCTOR		
	L1001	QQL231K-470Y	INDUCTOR		A
	L1002	QQL231K-470Y	INDUCTOR		A
	L1003	QQR0779-001Z	INDUCTOR		A
	L1003	QQL231K-2R2Y	INDUCTOR		UP,US,UX
	Q 360	2SD2395/EF/	TRANSISTOR		
	Q 361	KTC3199/GL/-T	TR I/M		
	Q 362	KTC3199/GL/-T	TR I/M		
	Q 366	2SD2395/EF/	TRANSISTOR		
	Q 367	KTA1267/YG/-T	TRANSISTOR		
	Q 368	KTC3199/GL/-T	TRANSISTOR		
	Q 369	2SD2395/EF/	TRANSISTOR		
	Q 370	KTC3199/GL/-T	TRANSISTOR		
	Q 371	KTA1023/OY/-T	TRANSISTOR		
	Q 372	KTA1023/OY/-T	TRANSISTOR		
	Q 373	KRA104M-T	D.TRANSISTOR		
	Q 374	KRC104M-T	D.TRANSISTOR		
	Q 375	KTA1267/YG/-T	TRANSISTOR		
	Q 801	KTC3195/O/-T	TRANSISTOR		
	Q 802	KTC3195/O/-T	TRANSISTOR		
	Q 803	KRC102M-T	D.TRANSISTOR		
	Q 804	KRC102M-T	D.TRANSISTOR		
	Q 805	KRC102M-T	D.TRANSISTOR		
	Q 806	KRC102M-T	D.TRANSISTOR		
	Q 807	KRC102M-T	D.TRANSISTOR		
	Q 808	KRC102M-T	D.TRANSISTOR		
	Q 809	KRC102M-T	D.TRANSISTOR		
	Q 810	KRC102M-T	D.TRANSISTOR		
	Q 811	KRC102M-T	D.TRANSISTOR		
	Q 851	KTC3199/GL/-T	TRANSISTOR		
	Q 860	KTC3199/GL/-T	TRANSISTOR		
	Q 870	2SA1175/HFE/-T	TRANSISTOR		
	Q 871	KTC3199/GL/-T	TRANSISTOR		
	Q 872	KRC107M-T	D.TRANSISTOR		
	Q 873	KTC3199/GL/-T	TRANSISTOR		
	Q 874	KTC3199/GL/-T	TRANSISTOR		
	Q 875	KRC102M-T	D.TRANSISTOR		
	Q 877	KRC114M-T	TRANSISTOR		
	Q 878	KRA102M-T	D.TRANSISTOR		
	Q 879	KRA102M-T	D.TRANSISTOR		
	Q 880	KRC102M-T	D.TRANSISTOR		
	Q 905	KRC107M-T	D.TRANSISTOR		
	Q 906	KRC107M-T	D.TRANSISTOR		
	Q 961	KRA102M-T	D.TRANSISTOR		
⚠	R 360	QRZ9042-2R2X	F RESISTOR	2.2 1/0W	
⚠	R 361	QRJ146J-4R7X	F RESISTOR	4.7 5% 1/4W	
	R 362	QRE141J-331Y	C RESISTOR	330 5% 1/4W	
	R 363	QRE141J-331Y	C RESISTOR	330 5% 1/4W	

⚠	Item	Parts number	Parts name	Remarks	Area
	R 364	QRE141J-122Y	C RESISTOR	1.2K 5% 1/4W	
	R 365	QRE141J-561Y	C RESISTOR	560 5% 1/4W	
	R 366	QRE141J-561Y	C RESISTOR	560 5% 1/4W	
	R 367	QRE141J-122Y	C RESISTOR	1.2K 5% 1/4W	
	R 368	QRE141J-331Y	C RESISTOR	330 5% 1/4W	
	R 372	QRE141J-4R7Y	C RESISTOR	4.7 5% 1/4W	
	R 376	QRE141J-221Y	C RESISTOR	220 5% 1/4W	
	R 377	QRE141J-561Y	C RESISTOR	560 5% 1/4W	
	R 378	QRE141J-152Y	C RESISTOR	1.5K 5% 1/4W	
	R 381	QRE141J-182Y	C RESISTOR	1.8K 5% 1/4W	
	R 382	QRE141J-221Y	C RESISTOR	220 5% 1/4W	
	R 384	QRE141J-272Y	C RESISTOR	2.7K 5% 1/4W	
	R 385	QRE141J-562Y	C RESISTOR	5.6K 5% 1/4W	
	R 388	QRE141J-681Y	C RESISTOR	680 5% 1/4W	
	R 389	QRE141J-103Y	C RESISTOR	10K 5% 1/4W	
⚠	R 394	QRZ9006-4R7X	F RESISTOR	4.7 1/0W	
⚠	R 395	QRZ9042-2R2X	F.RESISTOR	2.2 1/0W	
⚠	R 396	QRZ9042-2R2X	F.RESISTOR	2.2 1/0W	
	R 801	QRE141J-331Y	C RESISTOR	330 5% 1/4W	
	R 802	QRE141J-223Y	C RESISTOR	22K 5% 1/4W	
	R 803	QRE141J-223Y	C RESISTOR	22K 5% 1/4W	
	R 804	QRE141J-822Y	C RESISTOR	8.2K 5% 1/4W	
	R 805	QRE141J-822Y	C RESISTOR	8.2K 5% 1/4W	
	R 806	QRE141J-124Y	C RESISTOR	120K 5% 1/4W	
	R 807	QRE141J-103Y	C RESISTOR	10K 5% 1/4W	
	R 808	QRE141J-103Y	C RESISTOR	10K 5% 1/4W	
	R 809	QRE141J-103Y	C RESISTOR	10K 5% 1/4W	
	R 810	QRE141J-103Y	C RESISTOR	10K 5% 1/4W	
	R 811	QRE141J-103Y	C RESISTOR	10K 5% 1/4W	
	R 812	QRE141J-103Y	C RESISTOR	10K 5% 1/4W	
	R 813	QRE141J-103Y	C RESISTOR	10K 5% 1/4W	
	R 814	QRE141J-562Y	C RESISTOR	5.6K 5% 1/4W	
	R 815	QRE141J-563Y	C RESISTOR	56K 5% 1/4W	
	R 816	QRE141J-563Y	C RESISTOR	56K 5% 1/4W	
	R 817	QRE141J-103Y	C RESISTOR	10K 5% 1/4W	
	R 818	QRE141J-103Y	C RESISTOR	10K 5% 1/4W	
	R 819	QRE141J-102Y	C RESISTOR	1.0K 5% 1/4W	
	R 820	QRE141J-102Y	C RESISTOR	1.0K 5% 1/4W	
	R 821	QRE141J-103Y	C RESISTOR	10K 5% 1/4W	
	R 822	QRE141J-103Y	C RESISTOR	10K 5% 1/4W	
	R 823	QRE141J-102Y	C RESISTOR	1.0K 5% 1/4W	
	R 824	QRE141J-102Y	C RESISTOR	1.0K 5% 1/4W	
	R 827	QRE141J-103Y	C RESISTOR	10K 5% 1/4W	
	R 831	QRE141J-104Y	C RESISTOR	100K 5% 1/4W	
	R 834	QRE141J-104Y	C RESISTOR	100K 5% 1/4W	
	R 835	QRE141J-104Y	C RESISTOR	100K 5% 1/4W	
	R 836	QRE141J-104Y	C RESISTOR	100K 5% 1/4W	
	R 837	QRE141J-104Y	C RESISTOR	100K 5% 1/4W	
	R 838	QRE141J-102Y	C RESISTOR	1.0K 5% 1/4W	
	R 839	QRE141J-102Y	C RESISTOR	1.0K 5% 1/4W	
	R 840	QRE141J-103Y	C RESISTOR	10K 5% 1/4W	
	R 841	QRE141J-103Y	C RESISTOR	10K 5% 1/4W	
	R 842	QRE141J-103Y	C RESISTOR	10K 5% 1/4W	
	R 843	QRE141J-221Y	C RESISTOR	220 5% 1/4W	
	R 844	QRE141J-103Y	C RESISTOR	10K 5% 1/4W	
	R 845	QRE141J-102Y	C RESISTOR	1.0K 5% 1/4W	
	R 846	QRE141J-102Y	C RESISTOR	1.0K 5% 1/4W	
	R 847	QRE141J-102Y	C RESISTOR	1.0K 5% 1/4W	
	R 848	QRE141J-331Y	C RESISTOR	330 5% 1/4W	
	R 849	QRE141J-102Y	C RESISTOR	1.0K 5% 1/4W	
	R 850	QRE141J-681Y	C RESISTOR	680 5% 1/4W	
	R 851	QRE141J-391Y	C RESISTOR	390 5% 1/4W	
	R 852	QRE141J-4R7Y	C RESISTOR	4.7 5% 1/4W	
	R 853	QRZ9042-2R2X	F RESISTOR	2.2 1/0W	

■ **Electrical parts list (System control board)** Block No. 02

⚠	Item	Parts number	Parts name	Remarks	Area
	R 856	QRE141J-100Y	C RESISTOR	10 5% 1/4W	
	R 857	QRE141J-104Y	C RESISTOR	100K 5% 1/4W	
	R 858	QRE141J-104Y	C RESISTOR	100K 5% 1/4W	
	R 860	QRE141J-684Y	C RESISTOR	680K 5% 1/4W	
	R 861	QRE141J-103Y	C RESISTOR	10K 5% 1/4W	
	R 862	QRE141J-220Y	C RESISTOR	22 5% 1/4W	
	R 864	QRE141J-103Y	C RESISTOR	10K 5% 1/4W	
	R 870	QRE141J-473Y	C RESISTOR	47K 5% 1/4W	
	R 871	QRE141J-102Y	C RESISTOR	1.0K 5% 1/4W	
	R 872	QRE141J-103Y	C RESISTOR	10K 5% 1/4W	
	R 873	QRE141J-103Y	C RESISTOR	10K 5% 1/4W	
	R 874	QRE141J-182Y	C RESISTOR	1.8K 5% 1/4W	
	R 875	QRE141J-472Y	C RESISTOR	4.7K 5% 1/4W	
	R 876	QRE141J-103Y	C RESISTOR	10K 5% 1/4W	
	R 879	QRE141J-473Y	C RESISTOR	47K 5% 1/4W	
	R 880	QRE141J-225Y	C RESISTOR	2.2M 5% 1/4W	
	R 881	QRE141J-103Y	C RESISTOR	10K 5% 1/4W	
	R 882	QRE141J-104Y	C RESISTOR	100K 5% 1/4W	
	R 883	QRE141J-220Y	C RESISTOR	22 5% 1/4W	
	R 885	QRE141J-102Y	C RESISTOR	1.0K 5% 1/4W	
	R 886	QRE141J-102Y	C RESISTOR	1.0K 5% 1/4W	
	R 887	QRE141J-102Y	C RESISTOR	1.0K 5% 1/4W	
	R 888	QRE141J-102Y	C RESISTOR	1.0K 5% 1/4W	
	R 889	QRE141J-102Y	C RESISTOR	1.0K 5% 1/4W	
	R 891	QRE141J-104Y	C RESISTOR	100K 5% 1/4W	
	R 892	QRE141J-104Y	C RESISTOR	100K 5% 1/4W	
	R 893	QRE141J-183Y	C RESISTOR	18K 5% 1/4W	UX
	R 893	QRE141J-753Y	C RESISTOR	75K 5% 1/4W	UP,US
	R 893	QRE141J-334Y	C RESISTOR	330K 5% 1/4W	A
	R 894	QRE141J-183Y	C RESISTOR	18K 5% 1/4W	UX
	R 894	QRE141J-334Y	C RESISTOR	330K 5% 1/4W	A,UP,US
	R 895	QRE141J-152Y	C RESISTOR	1.5K 5% 1/4W	
	R 896	QRE141J-103Y	C RESISTOR	10K 5% 1/4W	
	R 897	QRE141J-152Y	C RESISTOR	1.5K 5% 1/4W	
	R 898	QRE141J-103Y	C RESISTOR	10K 5% 1/4W	
	R 899	QRE141J-4R3Y	C RESISTOR	4.3 5% 1/4W	
	R 905	QRE141J-563Y	C RESISTOR	56K 5% 1/4W	
	R 906	QRE141J-563Y	C RESISTOR	56K 5% 1/4W	
	R 921	QRE141J-102Y	C RESISTOR	1.0K 5% 1/4W	
	R 922	QRE141J-102Y	C RESISTOR	1.0K 5% 1/4W	
	R 923	QRE141J-122Y	C RESISTOR	1.2K 5% 1/4W	
	R 924	QRE141J-152Y	C RESISTOR	1.5K 5% 1/4W	
	R 925	QRE141J-222Y	C RESISTOR	2.2K 5% 1/4W	
	R 926	QRE141J-272Y	C RESISTOR	2.7K 5% 1/4W	
	R 927	QRE141J-392Y	C RESISTOR	3.9K 5% 1/4W	
	R 928	QRE141J-562Y	C RESISTOR	5.6K 5% 1/4W	
	R 931	QRE141J-202Y	C RESISTOR	2.0K 5% 1/4W	
	R 932	QRE141J-122Y	C RESISTOR	1.2K 5% 1/4W	
	R 933	QRE141J-152Y	C RESISTOR	1.5K 5% 1/4W	
	R 934	QRE141J-222Y	C RESISTOR	2.2K 5% 1/4W	
	R 935	QRE141J-272Y	C RESISTOR	2.7K 5% 1/4W	
	R 936	QRE141J-392Y	C RESISTOR	3.9K 5% 1/4W	
	R 937	QRE141J-562Y	C RESISTOR	5.6K 5% 1/4W	
	R 938	QRE141J-103Y	C RESISTOR	10K 5% 1/4W	
	R 939	QRE141J-103Y	C RESISTOR	10K 5% 1/4W	
	R 941	QRE141J-102Y	C RESISTOR	1.0K 5% 1/4W	
	R 942	QRE141J-102Y	C RESISTOR	1.0K 5% 1/4W	
	R 943	QRE141J-122Y	C RESISTOR	1.2K 5% 1/4W	
	R 944	QRE141J-152Y	C RESISTOR	1.5K 5% 1/4W	
	R 945	QRE141J-222Y	C RESISTOR	2.2K 5% 1/4W	
	R 946	QRE141J-272Y	C RESISTOR	2.7K 5% 1/4W	
	R 951	QRE141J-753Y	C RESISTOR	75K 5% 1/4W	
	R 952	QRE141J-392Y	C RESISTOR	3.9K 5% 1/4W	
	R 953	QRE141J-562Y	C RESISTOR	5.6K 5% 1/4W	

⚠	Item	Parts number	Parts name	Remarks	Area
	R 954	QRE141J-103Y	C RESISTOR	10K 5% 1/4W	
	R 955	QRE141J-680Y	C RESISTOR	68 5% 1/4W	
	R 956	QRE141J-680Y	C RESISTOR	68 5% 1/4W	
	R 961	QRE141J-201Y	C RESISTOR	200 5% 1/4W	
	R 962	QRE141J-103Y	C RESISTOR	10K 5% 1/4W	
	R 963	QRE141J-103Y	C RESISTOR	10K 5% 1/4W	
	R 964	QRE141J-334Y	C RESISTOR	330K 5% 1/4W	
	R 981	QRE141J-680Y	C RESISTOR	68 5% 1/4W	
	R 982	QRE141J-680Y	C RESISTOR	68 5% 1/4W	
	R 985	QRE141J-392Y	C RESISTOR	3.9K 5% 1/4W	
	R 986	QRE141J-562Y	C RESISTOR	5.6K 5% 1/4W	
	R 991	QRE141J-102Y	C RESISTOR	1.0K 5% 1/4W	
	R 992	QRE141J-102Y	C RESISTOR	1.0K 5% 1/4W	
	R 993	QRE141J-122Y	C RESISTOR	1.2K 5% 1/4W	
	R 994	QRE141J-152Y	C RESISTOR	1.5K 5% 1/4W	
	R 995	QRE141J-222Y	C RESISTOR	2.2K 5% 1/4W	
	R 996	QRE141J-272Y	C RESISTOR	2.7K 5% 1/4W	
	RA801	QRB169J-104	R.NETWORK	100K 5% 1/6W	
	RA802	QRB169J-104	R.NETWORK	100K 5% 1/6W	
	S 921	QSW0825-001Z	TACT SWITCH		
	S 922	QSW0825-001Z	TACT SWITCH		
	S 923	QSW0825-001Z	TACT SWITCH		
	S 924	QSW0825-001Z	TACT SWITCH		
	S 925	QSW0825-001Z	TACT SWITCH		
	S 926	QSW0825-001Z	TACT SWITCH		
	S 927	QSW0825-001Z	TACT SWITCH		
	S 928	QSW0825-001Z	TACT SWITCH		
	S 931	QSW0825-001Z	TACT SWITCH		
	S 932	QSW0825-001Z	TACT SWITCH		
	S 933	QSW0825-001Z	TACT SWITCH		
	S 934	QSW0825-001Z	TACT SWITCH		
	S 935	QSW0825-001Z	TACT SWITCH		
	S 936	QSW0825-001Z	TACT SWITCH		
	S 937	QSW0825-001Z	TACT SWITCH		
	S 938	QSW0825-001Z	TACT SWITCH		
	S 939	QSW0825-001Z	TACT SWITCH		
	S 945	QSW0825-001Z	TACT SWITCH		
	S 946	QSW0825-001Z	TACT SWITCH		
	S 948	QSW0518-001	PUSH SWITCH	PANEL OP	
	S 949	QSW0122-001	PUSH SWITCH	PANEL CL	
	S 952	QSW0825-001Z	TACT SWITCH		
	S 953	QSW0825-001Z	TACT SWITCH		
	S 963	QSW0825-001Z	TACT SWITCH		
	S 985	QSW0825-001Z	TACT SWITCH		
	S 986	QSW0825-001Z	TACT SWITCH		
	S 991	QSW0825-001Z	TACT SWITCH		
	S 992	QSW0825-001Z	TACT SWITCH		
	S 993	QSW0825-001Z	TACT SWITCH		
	S 994	QSW0825-001Z	TACT SWITCH		
	S 995	QSW0825-001Z	TACT SWITCH		
	S 996	QSW0825-001Z	TACT SWITCH		
	S 997	QSW0825-001Z	TACT SWITCH		
	SP801	VYH7653-001	IC HOLDER		
	SP814	E3400-431	SPACER		
	SP823	VYSH101-009	SPACER		UX
	X 801	QAX0416-001Z	CERA LOCK		
	X 802	QAX0401-001	CRYSTAL		

■ Electrical parts list (Tuner board) Ver.A

Block No. 03

⚠	Item	Parts number	Parts name	Remarks	Area
	C 1	NCB21HK-223X	C CAPACITOR		
	C 2	NCB21HK-103X	C CAPACITOR		
	C 3	EETC1CM-106ZJC	E.CAPACITOR		
	C 4	NCB21HK-103X	C CAPACITOR		
	C 6	NCB21HK-102X	C CAPACITOR		
	C 7	NCB21HK-102X	C CAPACITOR		
	C 8	NCB21HK-102X	C CAPACITOR		
	C 9	NCB21HK-102X	C CAPACITOR		
	C 10	NDC21HJ-120X	C CAPACITOR		
	C 11	NCB21HK-104X	C CAPACITOR		
	C 12	NCB21HK-473X	C CAPACITOR		
	C 13	NDC21HJ-120X	C CAPACITOR		
	C 14	EETC1AM-107ZJC	E CAPACITOR		
	C 15	NDC21HJ-120X	C CAPACITOR		
	C 16	NDC21HJ-120X	C CAPACITOR		
	C 17	NCB21HK-392X	C CAPACITOR		
	C 18	QENC1HM-474Z	NP E CAPACITOR	.47MF 20% 50V	
	C 19	NCB21HK-473X	C CAPACITOR		
	C 20	NCB21HK-102X	C CAPACITOR		
	C 21	NCB21HK-223X	C CAPACITOR		
	C 22	NCS21HJ-151X	C CAPACITOR		
	C 23	NCS21HJ-151X	C CAPACITOR		
	C 24	NCS21HJ-151X	C CAPACITOR		
	C 25	EETC1AM-107ZJC	E CAPACITOR		
	C 26	NCB21HK-103X	C CAPACITOR		
	C 27	NCB21HK-103X	C CAPACITOR		
	C 30	EETC1CM-107ZJC	E CAPACITOR		
	C 31	QEKC1CM-226Z	E CAPACITOR	22MF 20% 16V	
	C 32	NCB21HK-473X	C CAPACITOR		
	C 33	NCB21HK-473X	C CAPACITOR		
	C 34	NCB21HK-223X	C CAPACITOR		
	C 35	NCB21HK-473X	C CAPACITOR		
	C 36	EETC1HM-105ZJC	E CAPACITOR		
	C 37	EETC1HM-105ZJC	E CAPACITOR		
	C 38	EETC1HM-224ZJC	E CAPACITOR		
	C 39	EETC1HM-105ZJC	E CAPACITOR		
	C 40	QETN1CM-106Z	E CAPACITOR	10MF 20% 16V	
	C 41	QETN1CM-106Z	E CAPACITOR	10MF 20% 16V	
	C 42	NCB21HK-182X	C CAPACITOR		
	C 43	NCB21HK-182X	C CAPACITOR		
	C 44	QETN1CM-106Z	E CAPACITOR	10MF 20% 16V	
	C 45	QETN1CM-106Z	E CAPACITOR	10MF 20% 16V	
	C 46	NCB21HK-223X	C CAPACITOR		
	C 47	EETC1HM-105ZJC	E CAPACITOR		
	C 48	NCB21HK-222X	C CAPACITOR		
	C 49	NCS21HJ-471X	C CAPACITOR		
	C 50	QEKC1CM-226Z	E CAPACITOR	22MF 20% 16V	
	C 51	QEKC1HM-105Z	E CAPACITOR	1.0MF 20% 50V	
	C 52	QFVJ1HJ-274Z	CAPACITOR	.27MF 5% 50V	
	C 53	EETC1CM-226ZJC	E CAPACITOR		
	C 54	NCB21HK-473X	C CAPACITOR		
	C 55	NCS21HJ-330X	C CAPACITOR		
	C 56	NCS21HJ-100X	C CAPACITOR		
	C 57	NCB21HK-102X	C CAPACITOR		
	C 58	NCB21HK-473X	C CAPACITOR		
	C 59	NCB21HK-102X	C CAPACITOR		
	CF 1	QAX0420-001	C FILTER		
	CF 2	QAX0458-001Z	C FILTER		
	CF 3	QAX0610-001Z	C DISCRIMINATOR		
	CN 1	QGF1205F1-09	CONNECTOR		
	D 1	1SS133-T2	SI DIODE		
	D 2	1SS133-T2	SI DIODE		
	D 3	1SS133-T2	SI DIODE		
	D 4	1SS133-T2	SI DIODE		

⚠	Item	Parts number	Parts name	Remarks	Area
	D 11	1SS133-T2	SI DIODE		
	IC 1	LA1838	IC		
	IC 2	LC72136N	IC		
	J 1	QNB0014-001	ANT TERMINAL		
	L 1	QQR1094-001	COIL BLOCK		
	L 2	QQL231K-330Y	INDUCTOR		
	L 3	QQL231K-4R7Y	INDUCTOR		
	Q 1	2SC2814/4-5/-X	TRANSISTOR		
	Q 2	2SC2412K/R/-X	TRANSISTOR		
	Q 3	2SC2412K/R/-X	TRANSISTOR		
	Q 4	DTA114YKA-X	TRANSISTOR		
	Q 5	DTA114YKA-X	TRANSISTOR		
	R 2	NRSA02J-331X	MG RESISTOR		
	R 3	NRSA02J-224X	MG RESISTOR		
	R 4	NRSA02J-331X	MG RESISTOR		
	R 5	NRSA02J-560X	MG RESISTOR		
	R 6	NRSA02J-120X	MG RESISTOR		
	R 10	NRSA02J-222X	MG RESISTOR		
	R 11	NRSA02J-472X	MG RESISTOR		
	R 12	NRSA02J-472X	MG RESISTOR		
	R 13	NRSA02J-103X	MG RESISTOR		
	R 14	NRSA02J-104X	MG RESISTOR		
	R 15	NRSA02J-332X	MG RESISTOR		
	R 16	NRSA02J-472X	MG RESISTOR		
	R 17	QRZ9005-680X	F.RESISTOR	68 1/0W	
	R 18	NRSA02J-102X	MG RESISTOR		
	R 19	NRSA02J-102X	MG RESISTOR		
	R 20	NRSA02J-102X	MG RESISTOR		
	R 21	NRSA02J-562X	MG RESISTOR		
	R 22	NRSA02J-472X	MG RESISTOR		
	R 23	NRSA02J-182X	MG RESISTOR		
	R 24	NRSA02J-103X	MG RESISTOR		
	R 25	NRSA02J-331X	MG RESISTOR		
	R 26	NRSA02J-222X	MG RESISTOR		
	R 27	NRSA02J-103X	MG RESISTOR		
	R 28	NRSA02J-103X	MG RESISTOR		
	R 29	NRSA02J-103X	MG RESISTOR		
	R 30	NRSA02J-122X	MG RESISTOR		
	R 31	NRSA02J-102X	MG RESISTOR		
	R 32	NRSA02J-102X	MG RESISTOR		
	R 33	NRSA02J-331X	MG RESISTOR		
	R 34	NRSA02J-470X	MG RESISTOR		
	R 35	NRSA02J-562X	MG RESISTOR		
	R 36	NRSA02J-332X	MG RESISTOR		
	R 37	NRSA02J-103X	MG RESISTOR		
	R 38	NRSA02J-393X	MG RESISTOR		
	R 39	NRSA02J-393X	MG RESISTOR		
	R 40	NRSA02J-393X	MG RESISTOR		
	R 41	NRSA02J-332X	MG RESISTOR		
	R 60	NRSA02J-0R0X	MG RESISTOR		
	T 1	QQR0793-001	IFT		
	TU 1	QAU0160-001	FRONT END		
	X 1	QAX0402-001	CRYSTAL		

■ Electrical parts list (Tuner board) Ver.UP/US/UX

Block No. 04

⚠	Item	Parts number	Parts name	Remarks	Area
	C 1	NCB21HK-223X	C CAPACITOR		
	C 2	NCB21HK-103X	C CAPACITOR		
	C 3	EETC1CM-106ZJC	E CAPACITOR		
	C 4	NCB21HK-103X	C CAPACITOR		
	C 6	NCB21HK-102X	C CAPACITOR		
	C 7	NCB21HK-102X	C CAPACITOR		
	C 8	NCB21HK-102X	C CAPACITOR		
	C 10	NRSA02J-0R0X	MG RESISTOR		
	C 11	NCB21HK-104X	C CAPACITOR		
	C 12	NCB21HK-473X	C CAPACITOR		
	C 13	NDC21HJ-120X	C CAPACITOR		
	C 14	EETC1AM-107ZJC	E CAPACITOR		
	C 15	NDC21HJ-120X	C CAPACITOR		
	C 16	NDC21HJ-120X	C CAPACITOR		
	C 17	NCB21HK-392X	C CAPACITOR		
	C 18	QENC1HM-474Z	NP E CAPACITOR	47MF 20% 50V	
	C 19	NCB21HK-473X	C CAPACITOR		
	C 20	NCB21HK-102X	C CAPACITOR		
	C 21	NCB21HK-223X	C CAPACITOR		
	C 22	NCS21HJ-151X	C CAPACITOR		
	C 23	NCS21HJ-151X	C CAPACITOR		
	C 24	NCS21HJ-151X	C CAPACITOR		
	C 25	EETC1AM-107ZJC	E CAPACITOR		
	C 26	NCB21HK-102X	C CAPACITOR		
	C 27	NCB21HK-102X	C CAPACITOR		
	C 30	EETC1CM-107ZJC	E CAPACITOR		
	C 31	QEKC1CM-226Z	MG RESISTOR	22MF 20% 16V	
	C 32	NCB21HK-473X	C CAPACITOR		
	C 33	NCB21HK-473X	C CAPACITOR		
	C 34	NCB21HK-223X	C CAPACITOR		
	C 35	NCB21HK-473X	C CAPACITOR		
	C 36	EETC1HM-105ZJC	E CAPACITOR		
	C 37	EETC1HM-105ZJC	E CAPACITOR		
	C 38	EETC1HM-224ZJC	E CAPACITOR		
	C 39	EETC1HM-105ZJC	E CAPACITOR		
	C 40	QETN1CM-106Z	E CAPACITOR	10MF 20% 16V	
	C 41	QETN1CM-106Z	E CAPACITOR	10MF 20% 16V	
	C 42	NCB21HK-152X	C CAPACITOR		
	C 43	NCB21HK-152X	C CAPACITOR		
	C 44	QETN1CM-106Z	E CAPACITOR	10MF 20% 16V	
	C 45	QETN1CM-106Z	E CAPACITOR	10MF 20% 16V	
	C 46	NCB21HK-273X	C CAPACITOR		
	C 47	EETC1HM-105ZJC	E CAPACITOR		
	C 48	NCB21HK-222X	C CAPACITOR		
	C 49	NCS21HJ-471X	C CAPACITOR		
	C 50	QEKC1CM-226Z	E CAPACITOR	22MF 20% 16V	
	C 51	QEKC1HM-105Z	E CAPACITOR	1.0MF 20% 50V	
	C 52	QFVJ1HJ-274Z	CAPACITOR	.27MF 5% 50V	
	C 53	EETC1CM-226ZJC	E CAPACITOR		
	C 54	NCB21HK-473X	C CAPACITOR		
	C 57	NCB21HK-102X	C CAPACITOR		
	C 58	NCB21HK-473X	C CAPACITOR		
	C 59	NCB21HK-102X	C CAPACITOR		
	CF 1	VCF2L3B-105Z	CERAMIC FILTER		
	CF 2	VCF2L3B-105Z	CERAMIC FILTER		
	CF 3	QAX0610-001Z	C DISCRIMINATOR		
	CN 1	QGF1205F1-09	CONNECTOR		
	D 1	1SS133-T2	SI DIODE		
	D 2	1SS133-T2	SI DIODE		
	D 3	1SS133-T2	SI DIODE		
	D 4	1SS133-T2	SI DIODE		
	D 11	1SS133-T2	SI DIODE		
	IC 1	LA1838	IC		
	IC 2	LC72136N	IC		

⚠	Item	Parts number	Parts name	Remarks	Area
	J 1	QNB0014-001	ANT TERMINAL		
	L 1	QQR0796-001	COIL BLOCK		
	Q 1	2SC2814/4-5/-X	TRANSISTOR		
	Q 5	DTA114YKA-X	TRANSISTOR		
	R 1	QRE141J-560Y	C RESISTOR	56 5% 1/4W	
	R 2	NRSA02J-331X	MG RESISTOR		
	R 3	NRSA02J-224X	MG RESISTOR		
	R 4	NRSA02J-331X	MG RESISTOR		
	R 5	NRSA02J-560X	MG RESISTOR		
	R 6	NRSA02J-240X	MG RESISTOR		
	R 10	NRSA02J-222X	MG RESISTOR		
	R 13	NRSA02J-103X	MG RESISTOR		
	R 14	NRSA02J-104X	MG RESISTOR		
	R 15	NRSA02J-332X	MG RESISTOR		
	R 16	NRSA02J-472X	MG RESISTOR		
	R 17	QRZ9005-680X	F.RESISTOR	68 1/0W	
	R 18	NRSA02J-102X	MG RESISTOR		
	R 19	NRSA02J-102X	MG RESISTOR		
	R 20	NRSA02J-102X	MG RESISTOR		
	R 21	NRSA02J-562X	MG RESISTOR		
	R 22	NRSA02J-472X	MG RESISTOR		
	R 23	NRSA02J-182X	MG RESISTOR		
	R 24	NRSA02J-103X	MG RESISTOR		
	R 25	NRSA02J-331X	MG RESISTOR		
	R 26	NRSA02J-222X	MG RESISTOR		
	R 27	NRSA02J-103X	MG RESISTOR		
	R 28	NRSA02J-103X	MG RESISTOR		
	R 29	NRSA02J-103X	MG RESISTOR		
	R 30	NRSA02J-122X	MG RESISTOR		
	R 31	NRSA02J-102X	MG RESISTOR		
	R 32	NRSA02J-102X	MG RESISTOR		
	R 33	NRSA02J-331X	MG RESISTOR		
	R 34	NRSA02J-470X	MG RESISTOR		
	R 35	NRSA02J-562X	MG RESISTOR		
	R 36	NRSA02J-332X	MG RESISTOR		
	R 37	NRSA02J-103X	MG RESISTOR		
	R 38	NRSA02J-563X	MG RESISTOR		
	R 39	NRSA02J-563X	MG RESISTOR		
	R 40	NRSA02J-243X	MG RESISTOR		
	R 41	NRSA02J-332X	MG RESISTOR		
	R 60	NRSA02J-0R0X	MG RESISTOR		
	T 1	QGR0793-001	IFT		
	TU 1	QAU0161-001	FRONT END		
	X 1	QAX0402-001	CRYSTAL		

■ Electrical parts list (CD servo board)

Block No. 05

⚠	Item	Parts number	Parts name	Remarks	Area
	C 251	NCS21HJ-100X	C CAPACITOR		
	C 252	NCS21HJ-100X	C CAPACITOR		
	C 253	NCB21EK-104X	C CAPACITOR		
	C 254	QERF1AM-476Z	E CAPACITOR	47MF 20% 10V	
	C 255	NCB21EK-104X	C CAPACITOR		
	C 281	NCB21HK-223X	C CAPACITOR		
	C 291	QERF1AM-476Z	E CAPACITOR	47MF 20% 10V	
	C 601	NCB21HK-102X	C CAPACITOR		
	C 602	NCB21HK-102X	C CAPACITOR		
	C 603	NCB21HK-223X	C CAPACITOR		
	C 604	NCB21HK-223X	C CAPACITOR		
	C 605	NCS21HJ-271X	C CAPACITOR		
	C 606	NCS21HJ-181X	C CAPACITOR		
	C 607	NCB21HK-222X	C CAPACITOR		
	C 608	NCB21HK-223X	C CAPACITOR		
	C 610	NCB21EK-104X	C CAPACITOR		
	C 611	NCB21EK-104X	C CAPACITOR		
	C 612	QER41HM-105	E CAPACITOR	1.0MF 20% 50V	
	C 613	NCS21HJ-101X	C CAPACITOR		
	C 614	NCB21HK-273X	C CAPACITOR		
	C 615	NCB21HK-472X	C CAPACITOR		
	C 616	NCB21HK-103X	C CAPACITOR		
	C 617	NCS21HJ-331X	C CAPACITOR		
	C 621	NCB21EK-104X	C CAPACITOR		
	C 623	NCF21CZ-105X	C CAPACITOR		
	C 624	QER41AM-107	E CAPACITOR	100MF 20% 10V	
	C 631	QER41CM-106	E CAPACITOR	10MF 20% 16V	
	C 632	NCF21CZ-105X	C CAPACITOR		
	C 633	NCB21HK-223X	C CAPACITOR		
	C 651	NCS21HJ-120X	C CAPACITOR		
	C 652	NCS21HJ-150X	C CAPACITOR		
	C 653	NCB21EK-104X	C CAPACITOR		
	C 654	NCB21HK-223X	C CAPACITOR		
	C 655	QER41AM-227	E CAPACITOR	220MF 20% 10V	
	C 656	NCB21EK-104X	C CAPACITOR		
	C 657	NCB21HK-222X	C CAPACITOR		
	C 658	NCB21HK-222X	C CAPACITOR		
	C 661	NCB21EK-104X	C CAPACITOR		
	C 662	QER41AM-107	E CAPACITOR	100MF 20% 10V	
	C 663	NCB21EK-104X	C CAPACITOR		
	C 664	NCB21HK-223X	C CAPACITOR		
	C 665	NCB21HK-223X	C CAPACITOR		
	C 666	NCS21HJ-471X	C CAPACITOR		
	C 667	NCF21CZ-105X	C CAPACITOR		
	C 668	NCB21HK-473X	C CAPACITOR		
	C 671	NCB21EK-104X	C CAPACITOR		
	C 672	QER41AM-107	E CAPACITOR	100MF 20% 10V	
	C 801	NCB21HK-822X	C CAPACITOR		
	C 802	NCB21HK-152X	C CAPACITOR		
	C 811	NCS21HJ-221X	C CAPACITOR		
	C 812	NCS21HJ-221X	C CAPACITOR		
	C 813	NCS21HJ-221X	C CAPACITOR		
	C 814	NCS21HJ-221X	C CAPACITOR		
	C 821	NCF21CZ-105X	C CAPACITOR		
	C 822	QER41AM-227	E CAPACITOR	220MF 20% 10V	
	C 851	QER41CM-106	E CAPACITOR	10MF 20% 16V	
	C 852	QER41CM-106	E CAPACITOR	10MF 20% 16V	
	C 855	NCB21EK-104X	C CAPACITOR		
	C 859	NCF21CZ-105X	C CAPACITOR		
	C 860	NCF21CZ-105X	C CAPACITOR		
	CN151	QGF1016F1-15	15FFC CONNECTOR	VIDEO CD	
	CN152	QGA2001F1-12	12P CN RIG	VIDEO CD	
	CN601	QGF1016F1-15	15FFC CONNECTOR	TRAVERSE	
	CN651	QGF1016F1-19	CONNECTOR	MAIN	

⚠	Item	Parts number	Parts name	Remarks	Area
	CN652	QGF1016F1-05	CONNECTOR	OSD	
	CN653	QGF1016F1-13	CONNECTOR	CD TEXT	
	CN801	QGA2001C1-06	6P PLUG ASSY	TRAVERSE	
	CN851	QGD2503F1-03	SOCKET	DISC DETECTION	
	CN854	QGB2016K1-07	CONNECTOR	TRAY SWITCH	
	CN855	QGB2012K2-10	CONNECTOR	CAM SWITCH	
	IC251	UPD78055GCA37	IC	MICOM	
	IC601	AN8806SB-W	IC	RF AMP	
	IC651	MN35510	IC	DSP & DAC	
	IC801	BA6897FP-W	IC	PU DRIVE	
	IC851	TA8409S	IC	L MOTOR DRIVE	
	IC852	TA8409S	IC	R MOTOR DRIVE	
	L 851	QQL01BK-100Z	INDUCTOR	VS DE-COUPLE	
	L 853	QQL01BK-100Z	INDUCTOR	L MOTOR	
	L 854	QQL01BK-100Z	INDUCTOR	R MOTOR	
	Q 291	2SB1357/EF/-T	TRANSISTOR		
	Q 631	2SA1037AK/RS/-X	TRANSISTOR		
	Q 842	DTA144ES-T	TRANSISTOR		
	R 251	NRSA02J-102X	MG RESISTOR		
	R 252	NRSA02J-102X	MG RESISTOR		
	R 253	NRSA02J-102X	MG RESISTOR		
	R 254	NRSA02J-102X	MG RESISTOR		
	R 255	NRSA02J-102X	MG RESISTOR		
	R 256	NRSA02J-102X	MG RESISTOR		
	R 257	NRSA02J-102X	MG RESISTOR		
	R 258	NRSA02J-102X	MG RESISTOR		
	R 259	NRSA02J-101X	MG RESISTOR		
	R 260	NRSA02J-102X	MG RESISTOR		
	R 261	NRSA02J-102X	MG RESISTOR		
	R 262	NRSA02J-102X	MG RESISTOR		
	R 263	NRSA02J-102X	MG RESISTOR		
	R 264	NRSA02J-102X	MG RESISTOR		
	R 265	NRSA02J-223X	MG RESISTOR		
	R 266	NRSA02J-102X	MG RESISTOR		
	R 267	NRSA02J-102X	MG RESISTOR		
	R 268	NRSA02J-102X	MG RESISTOR		
	R 269	NRSA02J-102X	MG RESISTOR		
	R 274	NRSA02J-102X	MG RESISTOR		
	R 275	NRSA02J-102X	MG RESISTOR		
	R 276	NRSA02J-102X	MG RESISTOR		
	R 277	NRSA02J-102X	MG RESISTOR		
	R 278	NRSA02J-102X	MG RESISTOR		
	R 279	NRSA02J-102X	MG RESISTOR		
	R 281	NRSA02J-102X	MG RESISTOR		
	R 282	NRSA02J-102X	MG RESISTOR		
	R 283	NRSA02J-102X	MG RESISTOR		
	R 284	NRSA02J-102X	MG RESISTOR		
	R 285	NRSA02J-102X	MG RESISTOR		
	R 286	NRSA02J-102X	MG RESISTOR		
	R 287	NRSA02J-102X	MG RESISTOR		
	R 288	NRSA02J-102X	MG RESISTOR		
	R 291	NRSA02J-122X	MG RESISTOR		
	R 292	NRSA02J-103X	MG RESISTOR		
	R 293	NRSA02J-102X	MG RESISTOR		
	R 601	NRSA02J-274X	MG RESISTOR		
	R 602	NRSA02J-154X	MG RESISTOR		
	R 603	NRSA02J-273X	MG RESISTOR		
	R 604	NRSA02J-104X	MG RESISTOR		
	R 605	NRSA02J-154X	MG RESISTOR		
	R 606	NRSA02J-474X	MG RESISTOR		
	R 607	NRSA02J-102X	MG RESISTOR		
	R 611	NRSA02J-113X	MG RESISTOR		
	R 612	NRSA02J-125X	MG RESISTOR		
	R 631	NRSA02J-2R2X	MG RESISTOR		

■ Electrical parts list (CD servo board)

Block No. 05

⚠	Item	Parts number	Parts name	Remarks	Area
	R 632	NRSA02J-100X	MG RESISTOR		
	R 634	NRSA02J-120X	MG RESISTOR		
	R 635	NRSA02J-121X	MG RESISTOR		
	R 636	NRSA02J-910X	MG RESISTOR		
	R 651	NRSA02J-271X	MG RESISTOR		
	R 652	NRSA02J-220X	MG RESISTOR		
	R 657	NRSA02J-102X	MG RESISTOR		
	R 658	NRSA02J-102X	MG RESISTOR		
	R 661	NRSA02J-220X	MG RESISTOR		
	R 662	NRSA02J-471X	MG RESISTOR		
	R 663	NRSA02J-124X	MG RESISTOR		
	R 665	NRSA02J-683X	MG RESISTOR		
	R 666	NRSA02J-155X	MG RESISTOR		
	R 667	NRSA02J-562X	MG RESISTOR		
	R 671	NRSA02J-102X	MG RESISTOR		
	R 672	NRSA02J-102X	MG RESISTOR		
	R 673	NRSA02J-102X	MG RESISTOR		
	R 674	NRSA02J-101X	MG RESISTOR		
	R 675	NRSA02J-102X	MG RESISTOR		
	R 676	NRSA02J-102X	MG RESISTOR		
	R 677	NRSA02J-102X	MG RESISTOR		
	R 678	NRSA02J-102X	MG RESISTOR		
	R 679	NRSA02J-102X	MG RESISTOR		
	R 680	NRSA02J-102X	MG RESISTOR		
	R 681	NRSA02J-102X	MG RESISTOR		
	R 682	NRSA02J-102X	MG RESISTOR		
	R 683	NRSA02J-102X	MG RESISTOR		
	R 684	NRSA02J-271X	MG RESISTOR		
	R 685	NRSA02J-102X	MG RESISTOR		
	R 686	NRSA02J-101X	MG RESISTOR		
	R 687	NRSA02J-102X	MG RESISTOR		
	R 688	NRSA02J-101X	MG RESISTOR		
	R 689	NRSA02J-102X	MG RESISTOR		
	R 690	NRSA02J-101X	MG RESISTOR		
	R 691	NRSA02J-101X	MG RESISTOR		
	R 692	NRSA02J-101X	MG RESISTOR		
	R 693	NRSA02J-471X	MG RESISTOR		
	R 694	NRSA02J-102X	MG RESISTOR		
	R 801	NRSA02J-222X	MG RESISTOR		
	R 802	NRSA02J-472X	MG RESISTOR		
	R 803	NRSA02J-123X	MG RESISTOR		
	R 804	NRSA02J-154X	MG RESISTOR		
	R 805	NRSA02J-123X	MG RESISTOR		
	R 806	NRSA02J-223X	MG RESISTOR		
	R 807	NRSA02J-222X	MG RESISTOR		
	R 808	NRSA02J-223X	MG RESISTOR		
	R 811	NRSA02J-473X	MG RESISTOR		
	R 812	NRSA02J-223X	MG RESISTOR		
	R 831	NRSA02J-151X	MG RESISTOR		
	R 832	NRSA02J-103X	MG RESISTOR		
	R 842	NRSA02J-472X	MG RESISTOR		
	R 851	NRSA02J-102X	MG RESISTOR		
	R 852	NRSA02J-102X	MG RESISTOR		
	R 853	NRSA02J-102X	MG RESISTOR		
	R 854	NRSA02J-102X	MG RESISTOR		
	R 855	NRSA02J-102X	MG RESISTOR		
	R 856	NRSA02J-102X	MG RESISTOR		
	R 857	NRSA02J-272X	MG RESISTOR		
	R 859	NRSA02J-181X	MG RESISTOR		
	R 861	NRSA02J-102X	MG RESISTOR		
	R 862	NRSA02J-102X	MG RESISTOR		
	R 863	NRSA02J-102X	MG RESISTOR		
	R 864	NRSA02J-102X	MG RESISTOR		
	R 865	NRSA02J-102X	MG RESISTOR		

⚠	Item	Parts number	Parts name	Remarks	Area
	R 866	NRSA02J-102X	MG RESISTOR		
	R 880	NRSA02J-102X	MG RESISTOR		
	R 881	NRSA02J-102X	MG RESISTOR		
	R 882	NRSA02J-102X	MG RESISTOR		
	R 883	NRSA02J-102X	MG RESISTOR		
	R 884	NRSA02J-102X	MG RESISTOR		
	R 885	NRSA02J-102X	MG RESISTOR		
	R 886	NRSA02J-102X	MG RESISTOR		
	R 887	NRSA02J-102X	MG RESISTOR		
	W 601	QUB220-07HPDT	SIN TWIST WIRE	D.GND	
	X 251	QAX0360-001Z	CRYSTAL	FOR IC251	
	X 651	QAX0413-001Z	CRYSTAL	FOR IC651	

■ Electrical parts list (CD select switch board)

Block No. 06

⚠	Item	Parts number	Parts name	Remarks	Area
	CN804	QGB2016J1-07	CONNECTOR		
	SW 1	QSW0859-001	DETECT SWITCH		
	SW 2	QSW0859-001	DETECT SWITCH		
	SW 3	QSW0859-001	DETECT SWITCH		
	SW 4	QSW0859-001	DETECT SWITCH		
	SW 5	QSW0859-001	DETECT SWITCH		
	SW 6	QSW0859-001	DETECT SWITCH		

■ **Electrical parts list**
(Head amplifier & Mechanism control board) **Block No. 07**

⚠	Item	Parts number	Parts name	Remarks	Area
	C 101	NCS21HJ-561X	C CAPACITOR		
	C 102	NCS21HJ-331X	C CAPACITOR		
	C 103	NCS21HJ-561X	C CAPACITOR		
	C 104	NCS21HJ-221X	C CAPACITOR		
	C 105	QEK40JM-227	E CAPACITOR	220MF 20% 6.3V	
	C 106	NCB21HK-333X	C CAPACITOR		
	C 107	QEK41EM-475	E CAPACITOR	4.7MF 20% 25V	
	C 108	NCB21HK-393X	C CAPACITOR		
	C 110	NCS21HJ-221X	C CAPACITOR		
	C 111	QEK41HM-104	E CAPACITOR	.10MF 20% 50V	
	C 112	QEK41CM-106	E CAPACITOR	10MF 20% 16V	
	C 113	NCB21HK-332X	C CAPACITOR		
	C 114	QEK41EM-475	E CAPACITOR	4.7MF 20% 25V	
	C 115	NCB21HK-153X	C CAPACITOR		
	C 116	NCB21HK-822X	C CAPACITOR		
	C 117	NCB21HK-223X	C CAPACITOR		
	C 119	NCB21HK-563X	C CAPACITOR		
	C 120	NCS21HJ-330X	C CAPACITOR		
	C 201	NCS21HJ-561X	C CAPACITOR		
	C 202	NCS21HJ-331X	C CAPACITOR		
	C 203	NCS21HJ-561X	C CAPACITOR		
	C 204	NCS21HJ-221X	C CAPACITOR		
	C 205	QEK40JM-227	E CAPACITOR	220MF 20% 6.3V	
	C 206	NCB21HK-333X	C CAPACITOR		
	C 207	QEK41EM-475	E CAPACITOR	4.7MF 20% 25V	
	C 208	NCB21HK-393X	C CAPACITOR		
	C 210	NCS21HJ-221X	C CAPACITOR		
	C 211	QEK41HM-104	E CAPACITOR	.10MF 20% 50V	
	C 212	QEK41CM-106	E CAPACITOR	10MF 20% 16V	
	C 213	NCB21HK-332X	C CAPACITOR		
	C 214	QEK41EM-475	E CAPACITOR	4.7MF 20% 25V	
	C 215	NCB21HK-153X	C CAPACITOR		
	C 216	NCB21HK-822X	C CAPACITOR		
	C 217	NCB21HK-223X	C CAPACITOR		
	C 219	NCB21HK-563X	C CAPACITOR		
	C 220	NCS21HJ-330X	C CAPACITOR		
	C 301	QEK41CM-106	E CAPACITOR	10MF 20% 16V	
	C 302	QEK41CM-476	E CAPACITOR	47MF 20% 16V	
	C 303	QEK41CM-226	E CAPACITOR	22MF 20% 16V	
	C 304	QEK41EM-475	E CAPACITOR	4.7MF 20% 25V	
	C 305	NCB21HK-393X	C CAPACITOR		
	C 306	QEK40JM-227	E CAPACITOR	220MF 20% 6.3V	
	C 308	NCB21HK-562X	C CAPACITOR		
	C 309	NCB21HK-562X	C CAPACITOR		
	C 310	NCB21HK-223X	C CAPACITOR		
	C 311	NCB21HK-682X	C CAPACITOR		
	C 313	QEKJ1AM-107Z	E CAPACITOR	100MF 20% 10V	
	C 314	QCZ0205-155Z	ML C CAPACITOR	1.5MF	
	C 315	QCZ0205-155Z	ML C CAPACITOR	1.5MF	
	C 316	QFG32AJ-103Z	PP CAPACITOR	.010MF 5% 100V	
	C 318	NCB21HK-103X	C CAPACITOR		
	C 319	QFG32AJ-821Z	TF CAPACITOR	820PF 5% 100V	
	C 321	NCB21HK-103X	C CAPACITOR		
	C 322	QFG32AJ-152Z	M CAPACITOR	1500PF 5% 100V	
	C 327	QEK41CM-476	E CAPACITOR	47MF 20% 16V	
	C 328	NCS21HJ-151X	C CAPACITOR		
	C 329	NCS21HJ-151X	C CAPACITOR		
	C 330	NCS21HJ-151X	C CAPACITOR		
	C 332	NCS21HJ-151X	C CAPACITOR		
	C 335	NCB21HK-103X	C CAPACITOR		
	C 336	NCB21HK-103X	C CAPACITOR		
	C 337	NCB21HK-103X	C CAPACITOR		
	C 338	NCB21HK-103X	C CAPACITOR		
	C 339	QEK41CM-476	E CAPACITOR	47MF 20% 16V	

⚠	Item	Parts number	Parts name	Remarks	Area
	C 340	NCB21HK-103X	C CAPACITOR		
	C 341	QEKJ1AM-107Z	E CAPACITOR	100MF 20% 10V	
	C 342	QEK41EM-475	E CAPACITOR	4.7MF 20% 25V	
	C 343	QET41CM-106	E CAPACITOR	10MF 20% 16V	
	C 344	NCB21HK-472X	C CAPACITOR		
	C 345	NCS21HJ-331X	C CAPACITOR		
	C 350	QFLM1HJ-102Z	M CAPACITOR	1000PF 5% 50V	
	CN301	QGF1205F1-06	CONNECTOR		
	CN302	QGF1205F1-06	CONNECTOR		
	CN303	QGB2011M1-10	B TO B CONNECTO		
	CN304	QGB2011M1-10	B TO B CONNECTO		
	CN305	QGF1205F1-10	CONNECTOR		
	CN306	QGF1205F1-11	CONNECTOR		
	D 307	HZM5.1NB2-X	CHIP Z DIODE CM		
	D 308	HZM5.1NB2-X	CHIP Z DIODE CM		
	D 309	MA704A-X	S.K.DIODE		
	IC301	BA3126N	IC		
	IC302	AN7345K	IC		
	IC303	BU4094BCF-X	IC		
	IC304	BU4094BCF-X	IC		
	L 202	QQR0779-001Z	INDUCTOR	EMC	
	L 301	QQR0620-001	OSC COIL(BIAS)		
	L 303	QQL01BK-100Z	INDUCTOR		
	Q 102	DTC144TKA-X	TRANSISTOR		
	Q 103	DTC144EKA-X	TRANSISTOR		
	Q 105	2SC3576-JVC-T	TRANSISTOR		
	Q 202	DTC144TKA-X	TRANSISTOR		
	Q 203	DTC144EKA-X	TRANSISTOR		
	Q 205	2SC3576-JVC-T	TRANSISTOR		
	Q 302	2SC2001/K/-T	TRANSISTOR		
	Q 303	2SC2001/K/-T	TRANSISTOR		
	Q 304	2SC3576-JVC-T	TRANSISTOR		
	Q 305	2SC3576-JVC-T	TRANSISTOR		
	Q 306	2SC2412K/RS/-X	CHIP TRANSISTOR		
	Q 307	2SC2412K/RS/-X	CHIP TRANSISTOR		
	Q 308	2SC2412K/RS/-X	CHIP TRANSISTOR		
	Q 309	2SC2412K/RS/-X	CHIP TRANSISTOR		
	Q 312	2SB562/C/-T	TRANSISTOR		
	Q 313	2SC2412K/RS/-X	CHIP TRANSISTOR		
	Q 314	2SB562/C/-T	TRANSISTOR		
	Q 315	2SC2412K/RS/-X	CHIP TRANSISTOR		
	Q 316	2SA952/LK/-T	TRANSISTOR		
	Q 317	DTC124EKA-X	TRANSISTOR		
	Q 321	DTC144EKA-X	TRANSISTOR		
	Q 322	DTC144EKA-X	TRANSISTOR		
	Q 323	2SC2412K/RS/-X	CHIP TRANSISTOR		
	R 102	NRSA02J-102X	MG RESISTOR		
	R 103	NRSA02J-183X	MG RESISTOR		
	R 105	NRSA02J-220X	MG RESISTOR		
	R 106	NRSA02J-392X	MG RESISTOR		
	R 107	NRSA02J-123X	MG RESISTOR		
	R 108	NRSA02J-222X	MG RESISTOR		
	R 109	NRSA02J-152X	MG RESISTOR		
	R 111	NRSA02J-562X	MG RESISTOR		
	R 112	NRSA02J-122X	MG RESISTOR		
	R 113	NRSA02J-271X	MG RESISTOR		
	R 114	NRSA02J-391X	MG RESISTOR		
	R 115	NRSA02J-332X	MG RESISTOR		
	R 117	NRSA02J-332X	MG RESISTOR		
	R 118	NRSA02J-152X	MG RESISTOR		
	R 119	NRSA02J-203X	MG RESISTOR		
	R 120	NRSA02J-102X	MG RESISTOR		
	R 121	NRSA02J-122X	MG RESISTOR		
	R 202	NRSA02J-102X	MG RESISTOR		

■ **Electrical parts list**
(Head amplifier & Mechanism control board) **Block No. 07**

⚠	Item	Parts number	Parts name	Remarks	Area
	R 203	NRSA02J-183X	MG RESISTOR		
	R 205	NRSA02J-220X	MG RESISTOR		
	R 206	NRSA02J-392X	MG RESISTOR		
	R 207	NRSA02J-123X	MG RESISTOR		
	R 208	NRSA02J-222X	MG RESISTOR		
	R 209	NRSA02J-152X	MG RESISTOR		
	R 211	NRSA02J-562X	MG RESISTOR		
	R 212	NRSA02J-122X	MG RESISTOR		
	R 213	NRSA02J-271X	MG RESISTOR		
	R 214	NRSA02J-391X	MG RESISTOR		
	R 215	NRSA02J-332X	MG RESISTOR		
	R 217	NRSA02J-332X	MG RESISTOR		
	R 218	NRSA02J-152X	MG RESISTOR		
	R 219	NRSA02J-203X	MG RESISTOR		
	R 220	NRSA02J-102X	MG RESISTOR		
	R 221	NRSA02J-122X	MG RESISTOR		
	R 301	NRS181J-221X	MG RESISTOR		
	R 302	NRS181J-101X	MG RESISTOR		
	R 304	NRSA02J-393X	MG RESISTOR		
	R 305	NRSA02J-103X	MG RESISTOR		
	R 306	NRSA02J-103X	MG RESISTOR		
	R 307	NRSA02J-103X	MG RESISTOR		
	R 308	NRSA02J-152X	MG RESISTOR		
	R 309	NRSA02J-152X	MG RESISTOR		
	R 310	NRS181J-820X	MG RESISTOR		
	R 311	NRS181J-820X	MG RESISTOR		
	R 313	NRSA02J-3R3X	MG RESISTOR		
	R 314	NRSA02J-223X	MG RESISTOR		
	R 315	NRSA02J-100X	MG RESISTOR		
	R 316	NRSA02J-223X	MG RESISTOR		
	R 317	NRSA02J-100X	MG RESISTOR		
	R 318	NRSA02J-123X	MG RESISTOR		
	R 319	NRSA02J-152X	MG RESISTOR		
	R 321	NRSA02J-123X	MG RESISTOR		
	R 322	NRSA02J-152X	MG RESISTOR		
	R 327	NRSA02J-474X	MG RESISTOR		
	R 328	NRSA02J-222X	MG RESISTOR		
	R 329	NRSA02J-222X	MG RESISTOR		
	R 330	NRSA02J-0R0X	MG RESISTOR		
	R 335	NRSA02J-222X	MG RESISTOR		
	R 336	NRSA02J-392X	MG RESISTOR		
	R 338	NRSA02J-222X	MG RESISTOR		
	R 339	NRSA02J-222X	MG RESISTOR		
	R 341	NRSA02J-222X	MG RESISTOR		
	R 343	NRSA02J-0R0X	MG RESISTOR		
	R 345	NRSA02J-222X	MG RESISTOR		
	R 346	NRSA02J-0R0X	MG RESISTOR		
	R 347	NRSA02J-392X	MG RESISTOR		
	R 348	NRSA02J-222X	MG RESISTOR		
	R 350	NRSA02J-472X	MG RESISTOR		
	R 351	NRSA02J-151X	MG RESISTOR		
	R 353	NRSA02J-472X	MG RESISTOR		
	R 354	NRSA02J-151X	MG RESISTOR		
	R 355	NRSA02J-332X	MG RESISTOR		
	R 357	NRSA02J-103X	MG RESISTOR		
	R 358	NRSA02J-222X	MG RESISTOR		
	R 359	NRSA02J-123X	MG RESISTOR		
	R 360	NRSA02J-433X	MG RESISTOR		
	R 361	NRSA02J-183X	MG RESISTOR		
	R 362	NRSA02J-123X	MG RESISTOR		
	R 363	NRSA02J-183X	MG RESISTOR		
	R 364	NRSA02J-433X	MG RESISTOR		
	R 365	NRSA02J-203X	MG RESISTOR		
	R 366	NRSA02J-123X	MG RESISTOR		
	R 367	NRSA02J-102X	MG RESISTOR		
	R 368	NRSA02J-391X	MG RESISTOR		
	R 369	NRSA02J-391X	MG RESISTOR		
	R 371	NRS181J-222X	MG RESISTOR		
	R 374	NRSA02J-912X	MG RESISTOR		
	R 375	NRSA02J-683X	MG RESISTOR		
	R 376	NRS181J-6R8X	MG RESISTOR		
	VR101	QVP0008-503Z	SEMI V RESISTOR		
	VR201	QVP0008-503Z	SEMI V RESISTOR		
	VR301	QVP0008-103Z	SEMI V RESISTOR		
	WIRE	EWR34D-10CS	FLAT WIRE		

■ **Electrical parts list (Cassette switch board)** **Block No. 08**

⚠	Item	Parts number	Parts name	Remarks	Area
	CN 1	QGB2011L1-10	B TO B CONNECTO		
	D 1	1SR139-400-T2	SI DIODE		
	IC 1	SG-105F3-BB,C	PHOTO SENSER		
	P 1	QNZ0104-001	POST PIN		
	SW 2	QSW0832-001	LEAF SWITCH	TAPE	
	SW 4	QSW0832-001	LEAF SWITCH	70U	
	SW 6	QSW0507-001	SWITCH		

■ **Electrical parts list (Cassette switch board)** **Block No. 09**

⚠	Item	Parts number	Parts name	Remarks	Area
	CN 1	QGB2011L1-10	B TO B CONNECTO		
	D 1	1SR139-400-T2	SI DIODE		
	IC 1	SG-105F3-BB,C	PHOTO SENSER		
	P 1	QNZ0104-001	POST PIN		
	SW 1	QSW0832-001	LEAF SWITCH	R.REC	
	SW 2	QSW0832-001	LEAF SWITCH	TAPE	
	SW 4	QSW0832-001	LEAF SWITCH	70U	
	SW 5	QSW0832-001	LEAF SWITCH	F.REC	
	SW 6	QSW0507-001	SWITCH		

Packing materials and accessories parts list

Block No. M 5 M M
Block No. M 6 M M

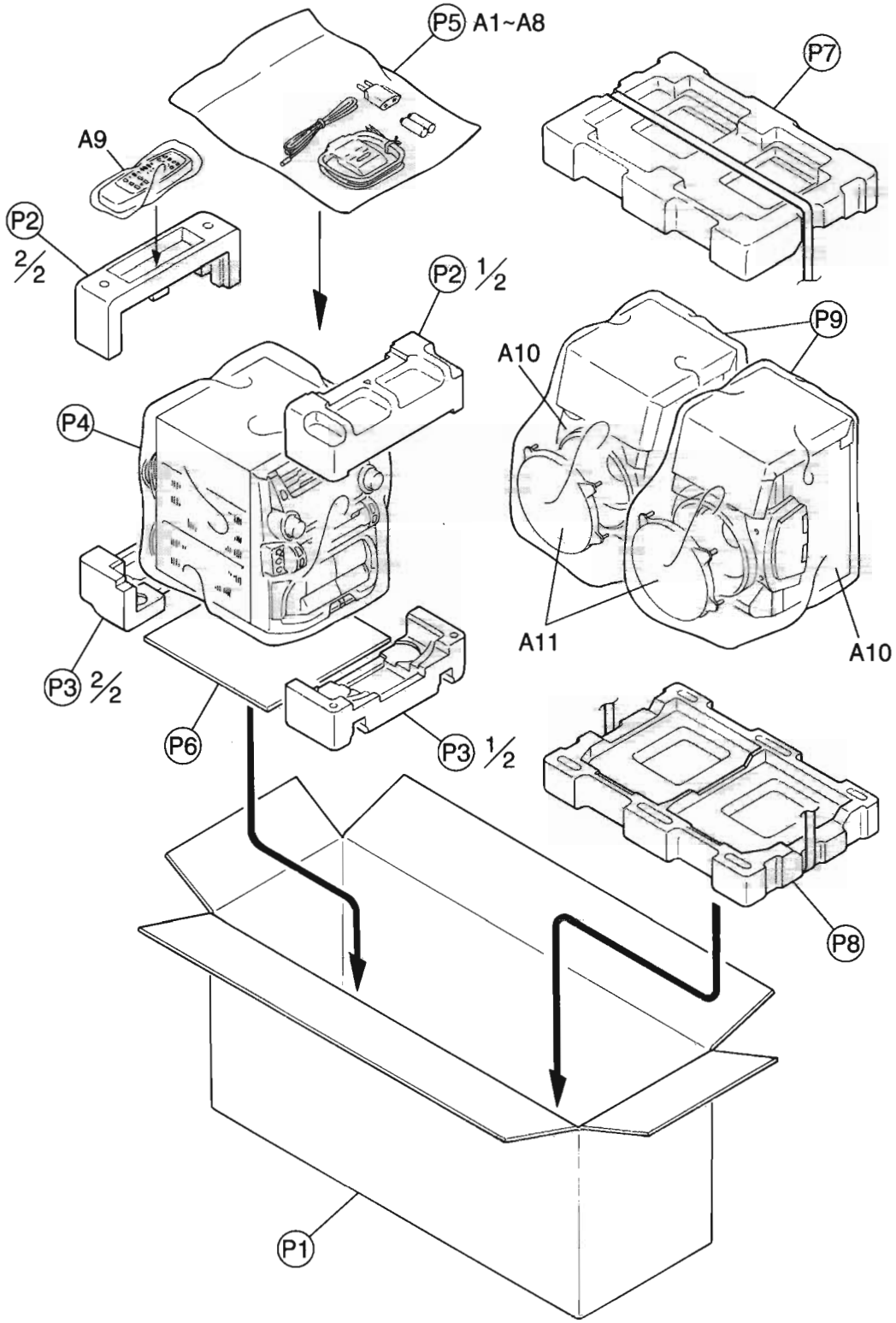

■ Packing parts list

Block No. M5MM

⚠	Item	Parts number	Parts name	Q'ty	Description	Area
	P 1	GV10031-001A	PACKING CASE	1		A
		GV10031-003A	PACKING CASE	1		US,UX
		GV10031-004A	PACKING CASE	1		UP
	P 2	GV10034-001A	CUSHION UPPER	1		
	P 3	GV10035-001A	CUSHION BOTTOM	1		
	P 4	QPC06507015P	POLY BAG	1	FOR SET	
	P 5	QPC02503515P	POLY BAG	1	FOR ACCESSORIES	
	P 6	GV40100-001A	CORRUGATED SPACER	1		
	P 7	139765161042	CUSHION UPPER	1	FOR SPEAKER	
	P 8	139765161043	CUSHION BOTTOM	1	FOR SPEAKER	
	P 9	138736001066	POLY BAG	2		

■ Accessories parts list

Block No. M6MM

⚠	Item	Parts number	Parts name	Q'ty	Description	Area
	A 1	GVT0029-003A	INST.BOOK	1	ENG,SPA,POR,CHI,ARA	US,UX
		GVT0029-004A	INST.BOOK	1	KOR	UP
		GVT0029-005A	INST.BOOK	1	ENG	A
	A 2	BT-56004-6	WARRANTY CARD	1		UP
		BT-56001-2	WARRANTY CARD	1		A
	A 3	BT-56002-2	S.CENTER LIST	1		A
	A 4	QAL0014-001	AM LOOP ANT	1		
	A 5	EWP503-001	B.IN ANT	1		
	A 6	VMZ0139-001	CONTHI PLUG	1		UX
	A 7	QAM0112-001	AC PLUG ADAPTER	1		US
	A 8	----------	BATTERY	1		
	A 9	RM-SMXJ500E	REMOCON	1		A
		RM-SMXJ500U	REMOCON	1		UP,US,UX
	A 10	MXJ550J-SPBOX-L	SPEAKER BOX ASS'Y(L)	1		
		MXJ550J-SPBOX-R	SPEAKER BOX ASS'Y(R)	1		
	A 11	199732080098	SPEAKER NET(L)	1		
		199732080101	SPEAKER NET(R)	1		

MX-J500

JVC

VICTOR COMPANY OF JAPAN, LIMITED
AUDIO DIVISION,10-1,1Chome,Ohwatari-machi,Maebashi-city,371-8543,Japan

No.20833

Printed in Japan
200004(V)