Connection Diagram

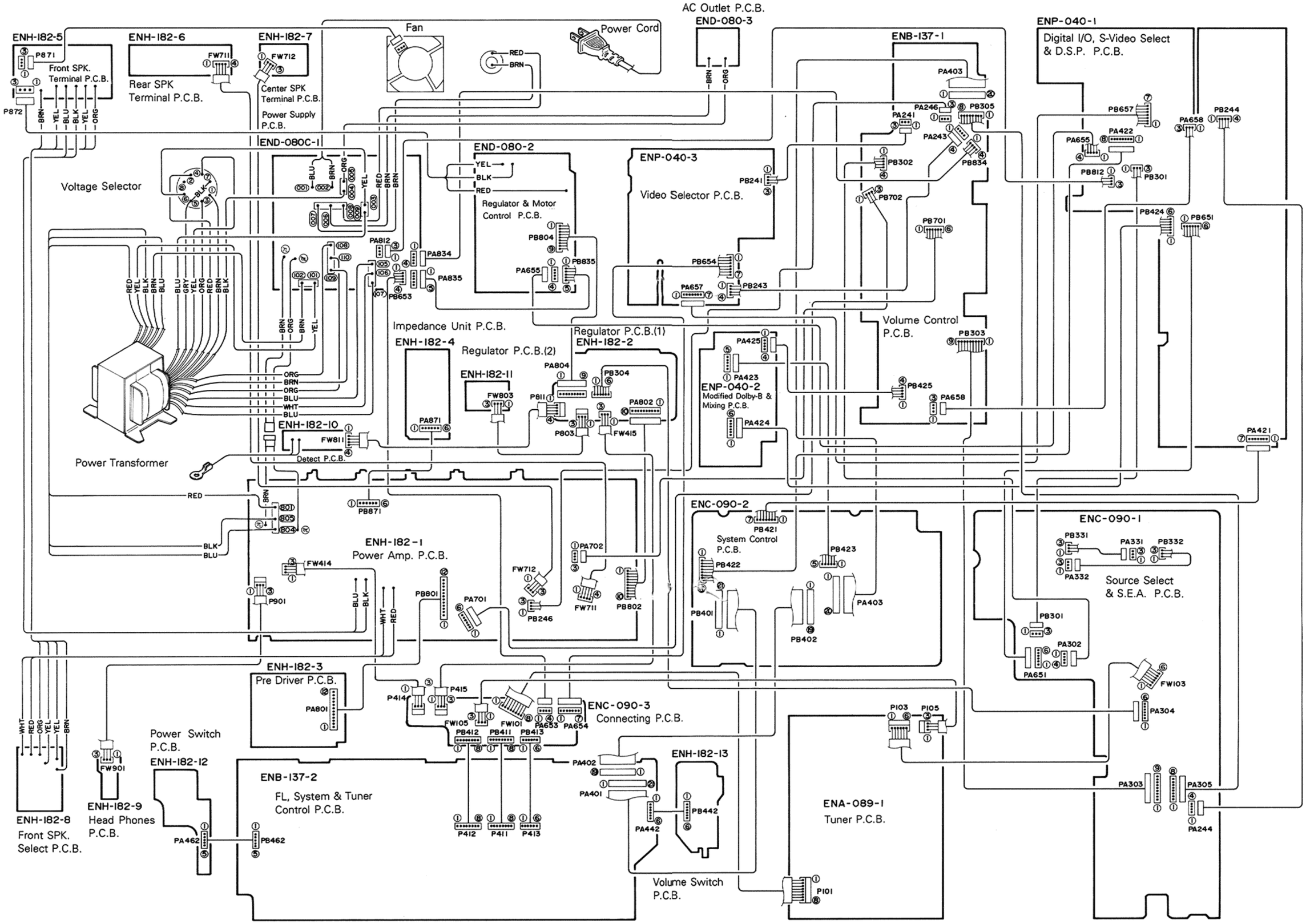

(No. 20284)

■ Video Selector & DAP P.C. Board (ENP-040)

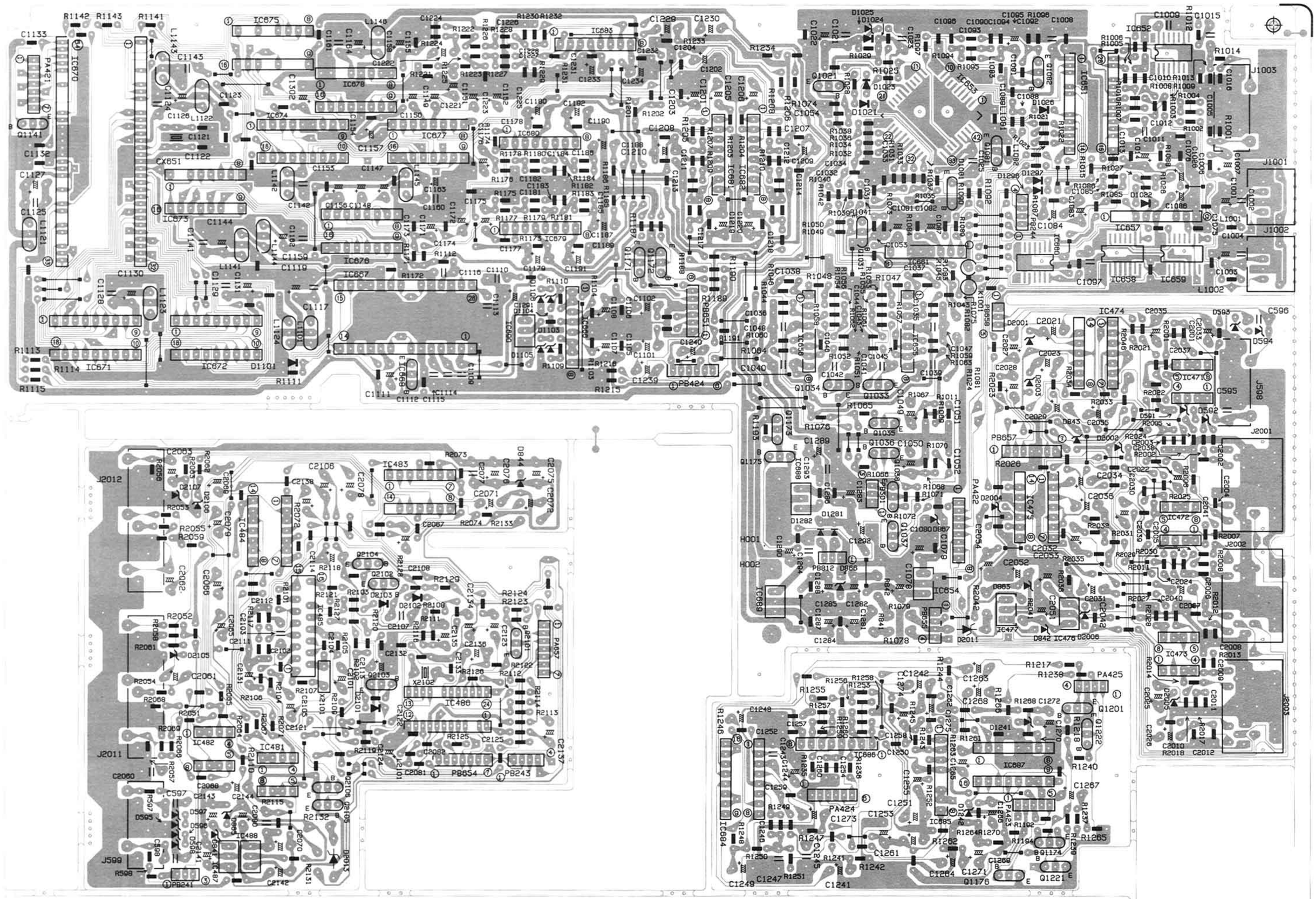

EMW10150

■ Power Amplifier P.C. Board (ENH-182)

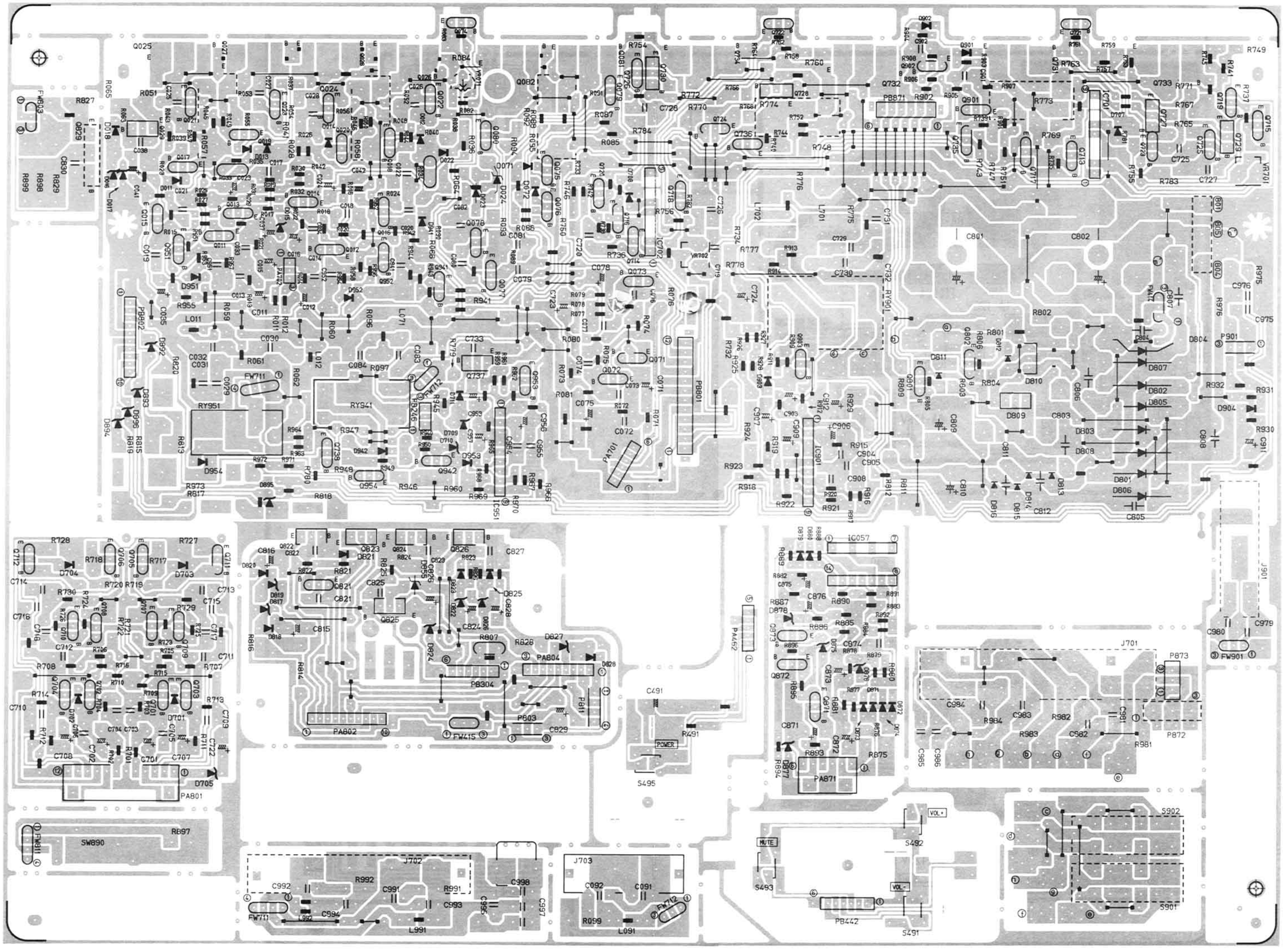

■ Power Supply P.C. Board (END-080)

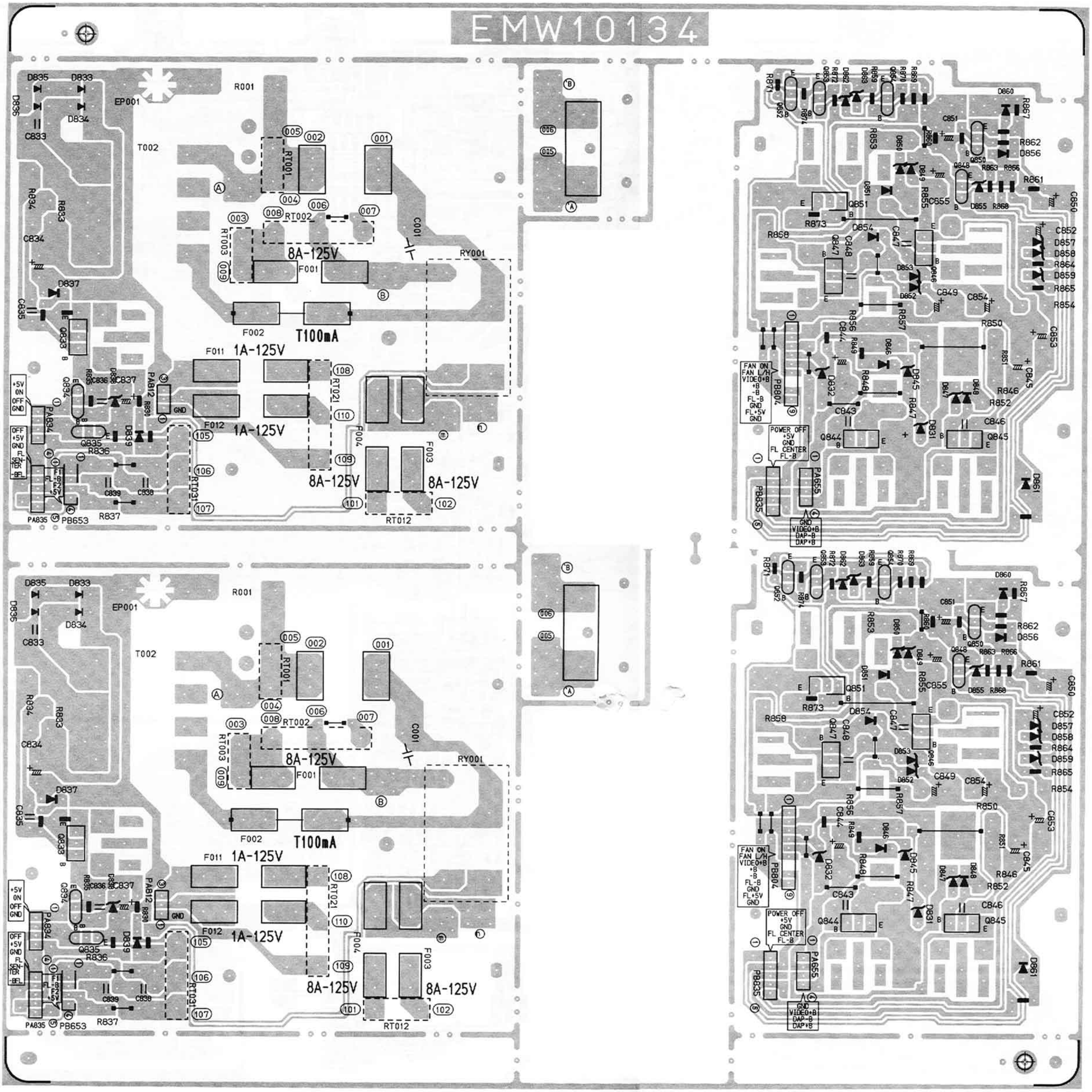

Printed Circuit Boards

■ System & Volume Control P.C. Board (ENB-137)

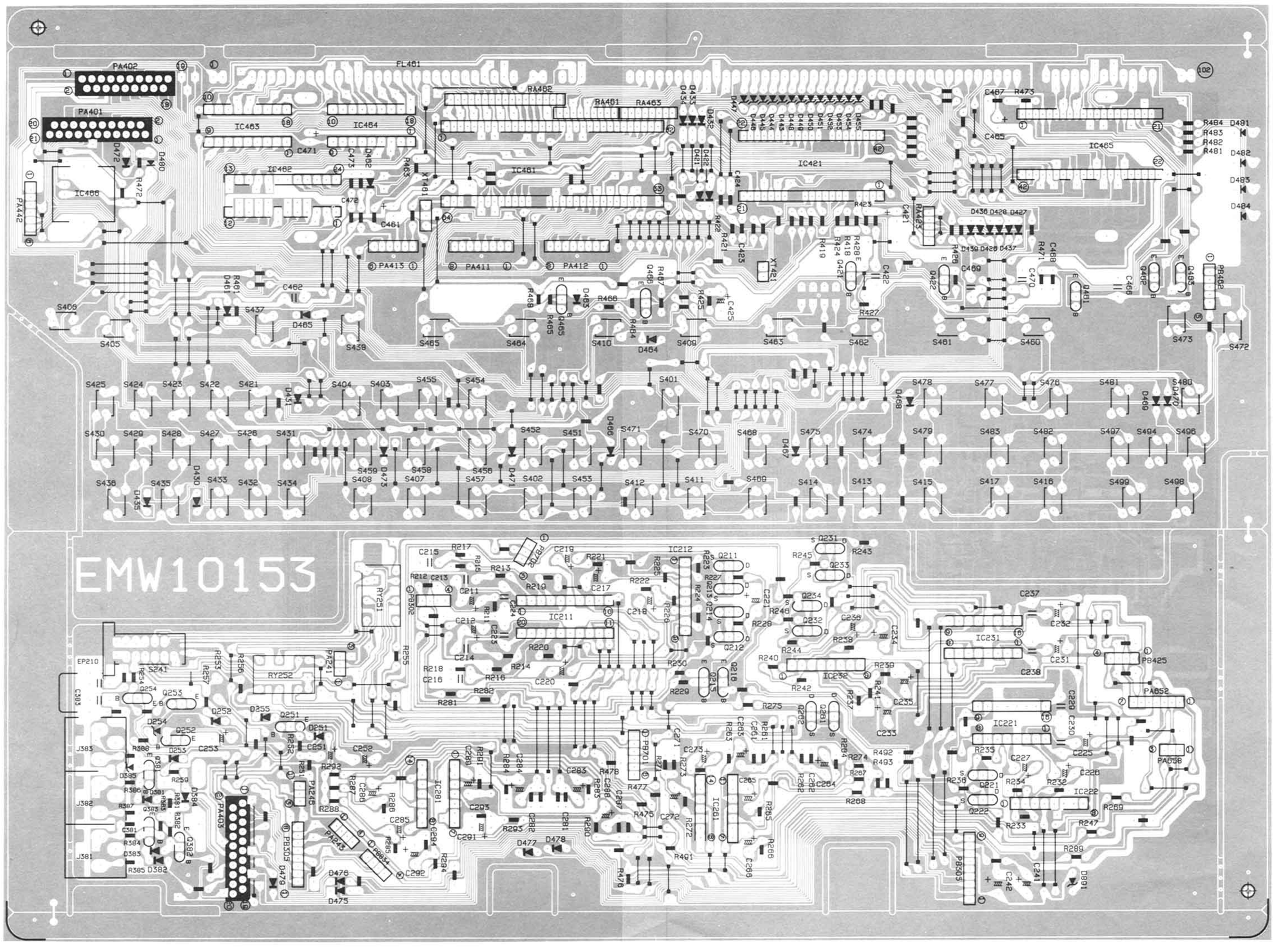

■ Tuner P.C. Board (ENA-089)

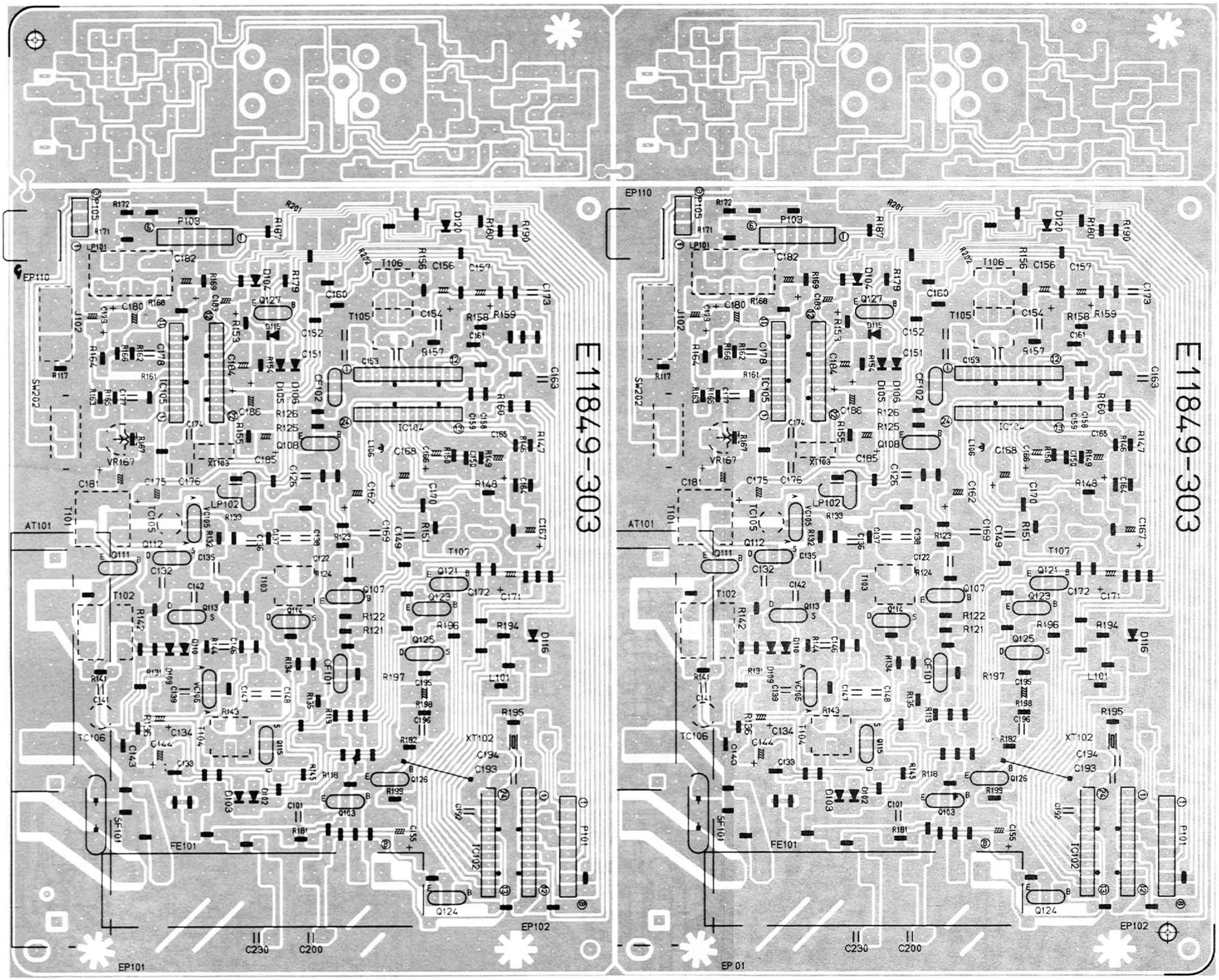

(No. 20284) (No. 20284)

■ DAP Section

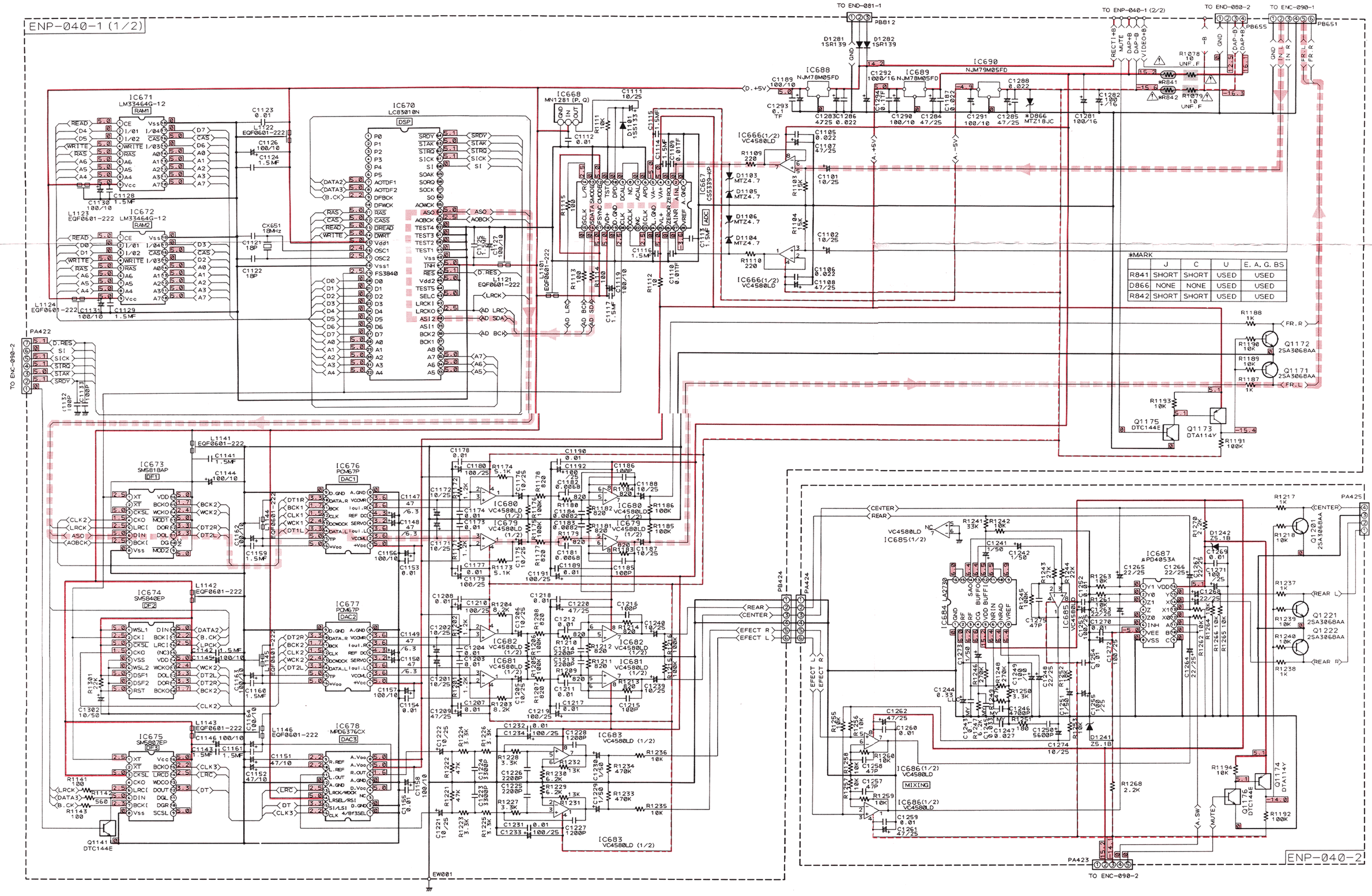

*MARK

	J	C	U	E. A. G. BS
R841	SHORT	SHORT	USED	USED
D866	NONE	NONE	USED	USED
R842	SHORT	SHORT	USED	USED

■ Digital I/O, S-Video I/O and System Control Section

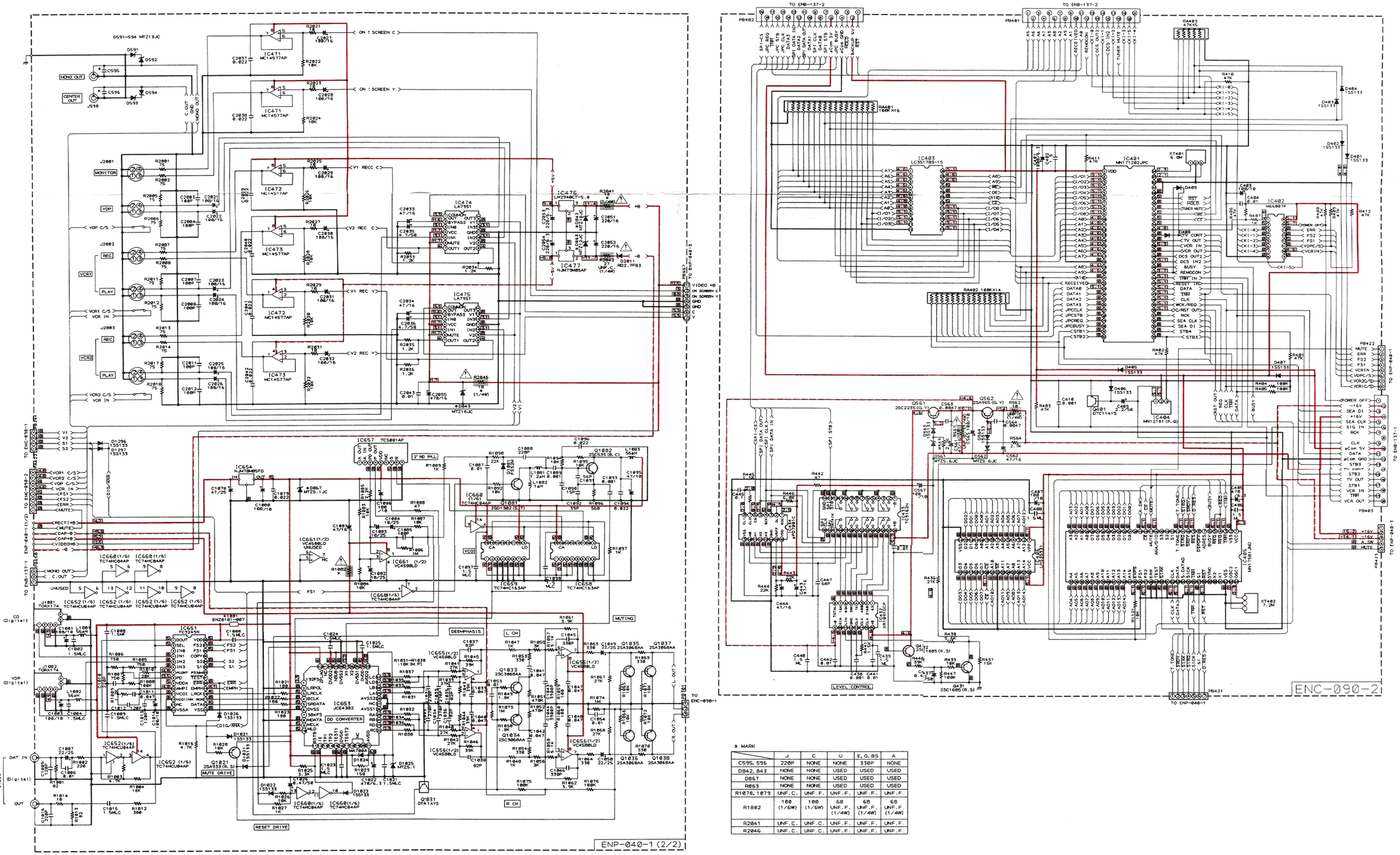

* MARK

	J	C	U	E, G, BS	A
C595, 596	220P	NONE	NONE	330P	NONE
D842, 843	NONE	NONE	USED	USED	USED
D867	NONE	NONE	USED	USED	USED
R863	NONE	NONE	USED	USED	USED
R1078, 1079	UNF.C.	UNF.F.	UNF.F.	UNF.F.	UNF.F.
R1882	100 (1/6W)	100 (1/6W)	68 UNF.F. (1/4W)	68 UNF.F. (1/4W)	68 UNF.F. (1/4W)
R2041	UNF.C.	UNF.C.	UNF.F.	UNF.F.	UNF.F.
R2046	UNF.C.	UNF.C.	UNF.F.	UNF.F.	UNF.F.

■ FL Display & Tuner Control Section

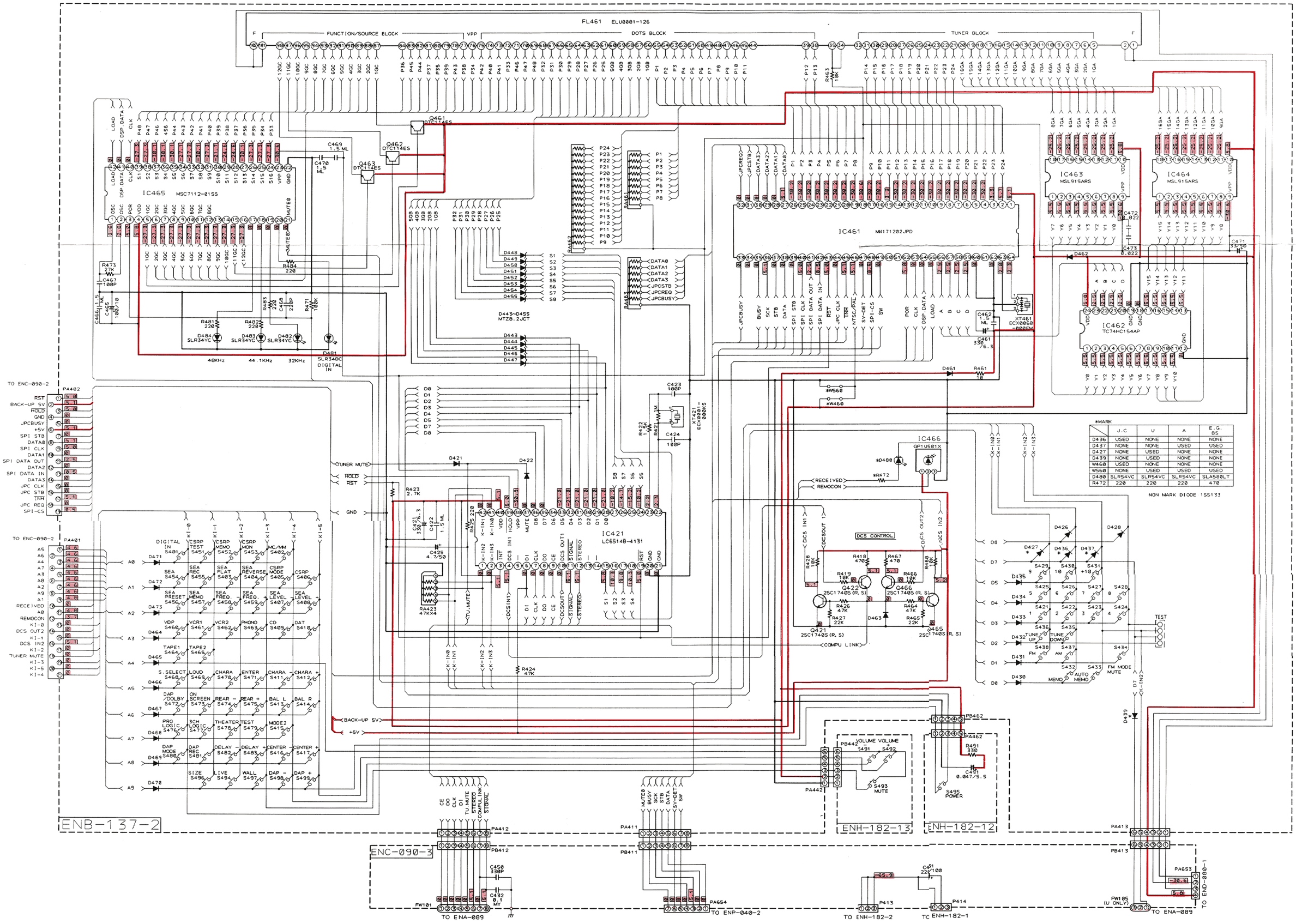

*MARK

	J.C	U	A	E.G. BS
D436	USED	NONE	NONE	NONE
D437	NONE	NONE	USED	USED
D427	NONE	USED	NONE	NONE
D439	NONE	USED	NONE	NONE
W460	USED	NONE	NONE	NONE
W560	NONE	USED	USED	USED
D480	SLR54VC	SLR54VC	SLR54VC	SLA580LT
R472	220	220	220	470

NON MARK DIODE 1SS133

Schematic Diagrams

■ Main, Rear and Center Amplifier Section

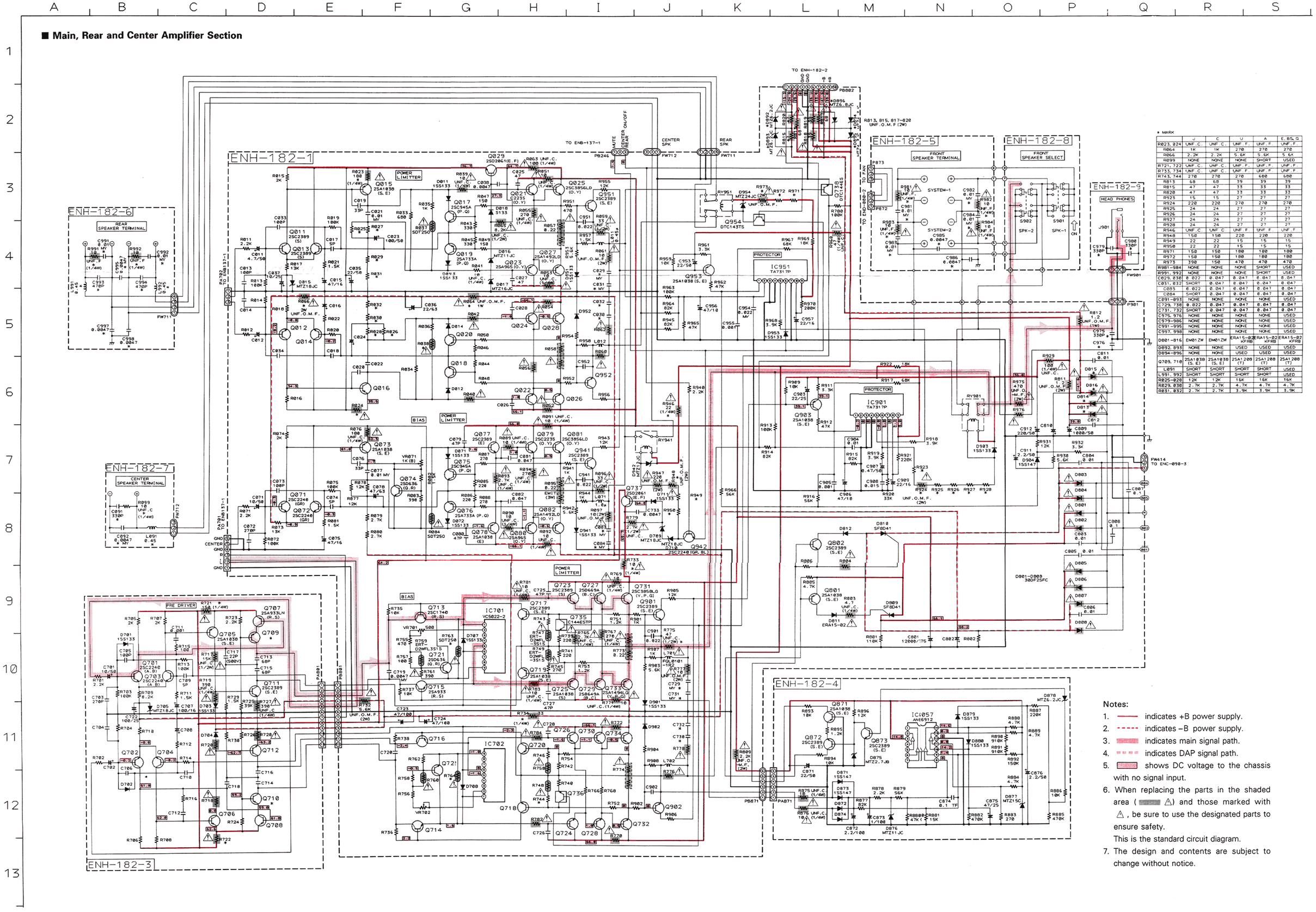

★ MARK	J	C	U	A	E, B5, G
R823, 824	UNF.C	UNF.C	UNF.F	UNF.F	UNF.F
R864	1K	1K	270	270	270
R866	2.2K	2.2K	5.6K	5.6K	5.6K
R899	NONE	NONE	NONE	SHORT	USED
R721, 722	UNF.C	UNF.C	UNF.F	UNF.F	UNF.F
R733, 734	UNF.C	UNF.C	UNF.F	UNF.F	UNF.F
R743, 744	270	270	270	680	680
R813	68	68	39	39	39
R815	47	47	33	33	33
R820	47	47	33	33	33
R923	15	15	27	27	27
R924	220	220	270	270	270
R925	24	24	27	27	27
R926	24	24	27	27	27
R927	24	24	27	27	27
R928	24	24	27	27	27
R946	UNF.C	UNF.C	UNF.F	UNF.F	UNF.F
R948	150	150	220	220	220
R949	22	22	15	15	15
R950	22	22	15	15	15
R971	150	150	180	180	180
R972	150	150	180	180	180
R973	390	150	470	470	470
R981~984	NONE	NONE	NONE	SHORT	USED
R991, 992	NONE	NONE	NONE	SHORT	USED
C029, 030	0.022	0.047	0.047	0.047	0.047
C031, 032	SHORT	0.047	0.047	0.047	0.047
C055	0.022	0.047	0.047	0.047	0.047
C084	SHORT	0.047	0.047	0.047	0.047
C891~893	NONE	NONE	NONE	NONE	USED
C729, 730	0.022	0.047	0.047	0.047	0.047
C731, 732	SHORT	0.047	0.047	0.047	0.047
C975, 976	NONE	NONE	NONE	NONE	USED
C979~986	NONE	NONE	NONE	NONE	USED
C991~995	NONE	NONE	NONE	NONE	USED
C997, 998	NONE	NONE	NONE	NONE	USED
D801~816	EM01Z	W	EM01Z	W	ERA15-02 KFRB / ERA15-02 KFRB / ERA15-02 KFRB
D892, 893	NONE	NONE	USED	USED	USED
D894~896	NONE	NONE	USED	USED	USED
Q709, 710	2SA1038 (S, E)	2SA1038 (S, E)	2SA1208 (T)	2SA1208 (T)	2SA1208 (T)
L091	SHORT	SHORT	SHORT	SHORT	USED
L991, 992	SHORT	SHORT	SHORT	SHORT	USED
R825~828	12K	12K	16K	16K	16K
R829, 830	2.7K	2.7K	4.7K	4.7K	4.7K
R831, 832	2.7K	2.7K	3.9K	3.9K	3.9K

Notes:

1. ——— indicates +B power supply.
2. - - - - indicates −B power supply.
3. ▬▬ indicates main signal path.
4. ▬ ▬ ▬ indicates DAP signal path.
5. ▭ shows DC voltage to the chassis with no signal input.
6. When replacing the parts in the shaded area (▭ ⚠) and those marked with ⚠, be sure to use the designated parts to ensure safety.
   This is the standard circuit diagram.
7. The design and contents are subject to change without notice.

■ Power Primary & Video Signal I/O Section

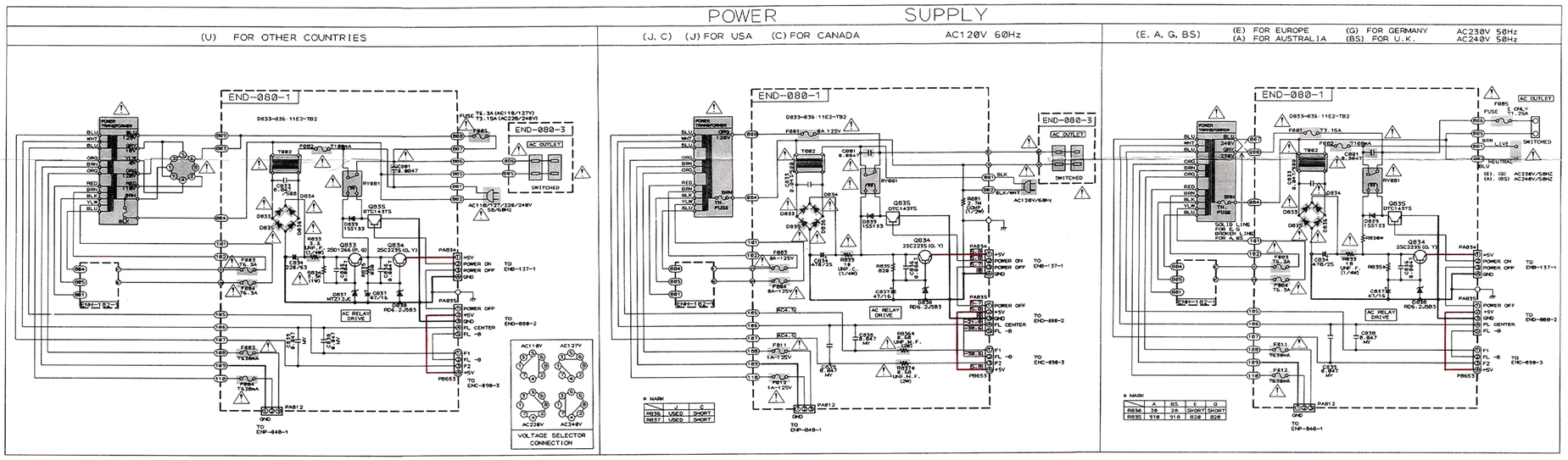

* MARK			
R836	USED	SHORT	
R837	USED	SHORT	

* MARK	J	C	U	E, G, BS	A
C212I, 2I22	22P	22P	27P	27P	27P
C2132, 2133	22P	22P	18P	18P	18P
C597, 598	USED	NONE	NONE	USED	NONE
D831, 832	NONE	NONE	USED	USED	USED
D841	NONE	NONE	USED	USED	USED
D844	NONE	NONE	USED	USED	USED
D865	NONE	NONE	USED	USED	USED
R867	SHORT	SHORT	USED	USED	USED
R824	UNF.C.	UNF.C.	UNF.F.	UNF.F.	UNF.F.
R827	USED	SHORT	SHORT	SHORT	SHORT
L2101	33μH	27μH	27μH	27μH	27μH
X2102	ECG1431 -B18GP	ECG1431 -B18GP	ECG1773 -4A70P	ECG1773 -4A70P	ECG1773 -4A70P
R858	UNF.C.	UNF.C.	UNF.F.	UNF.F.	UNF.F.

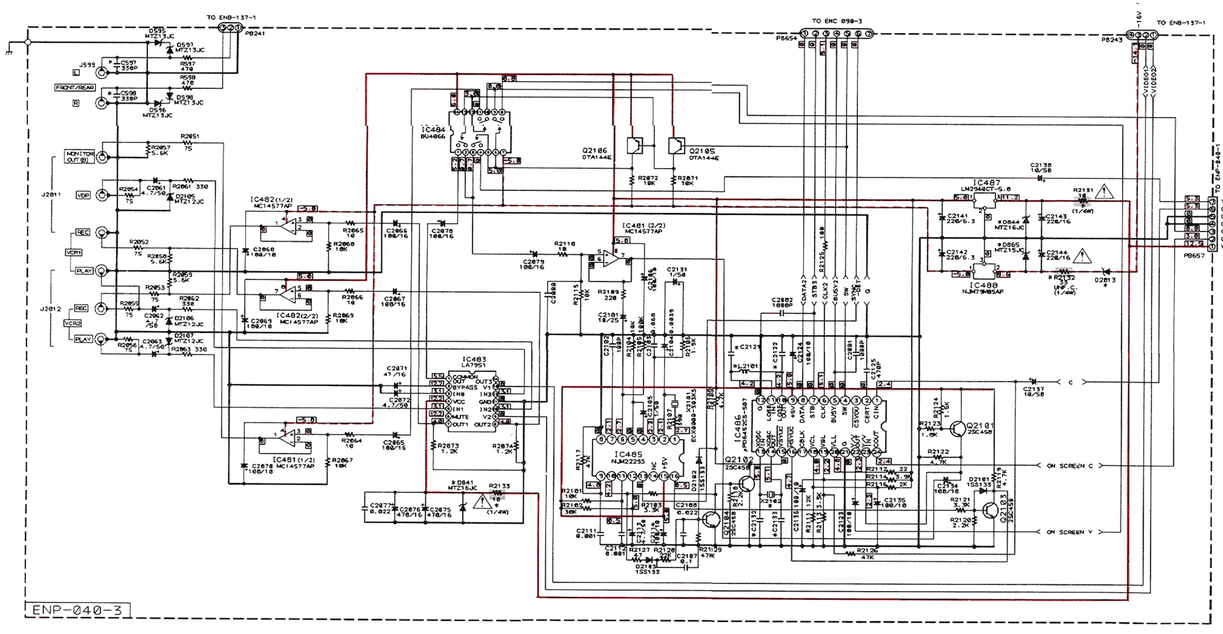

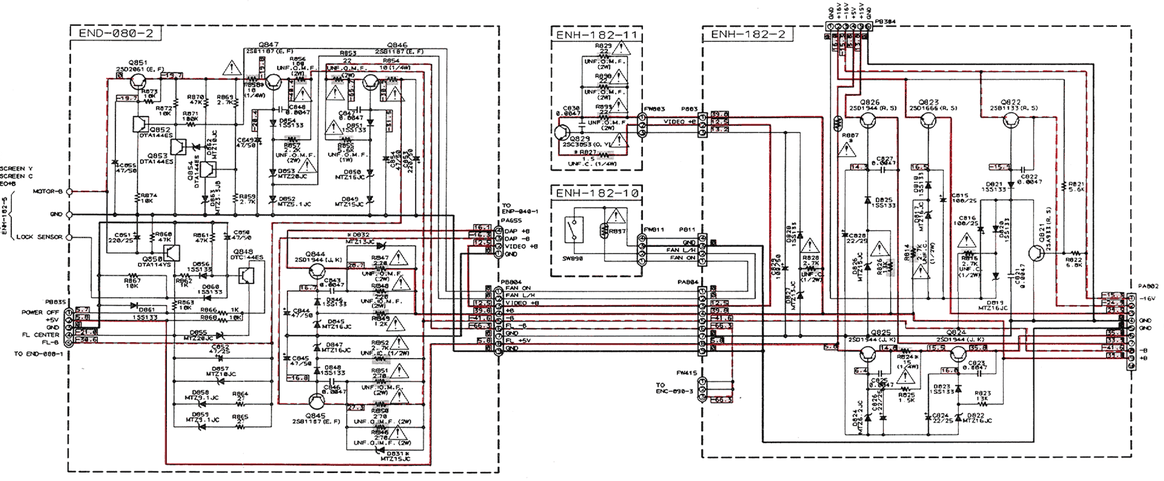

■ Source Select, S.E.A and Electric Volume Section

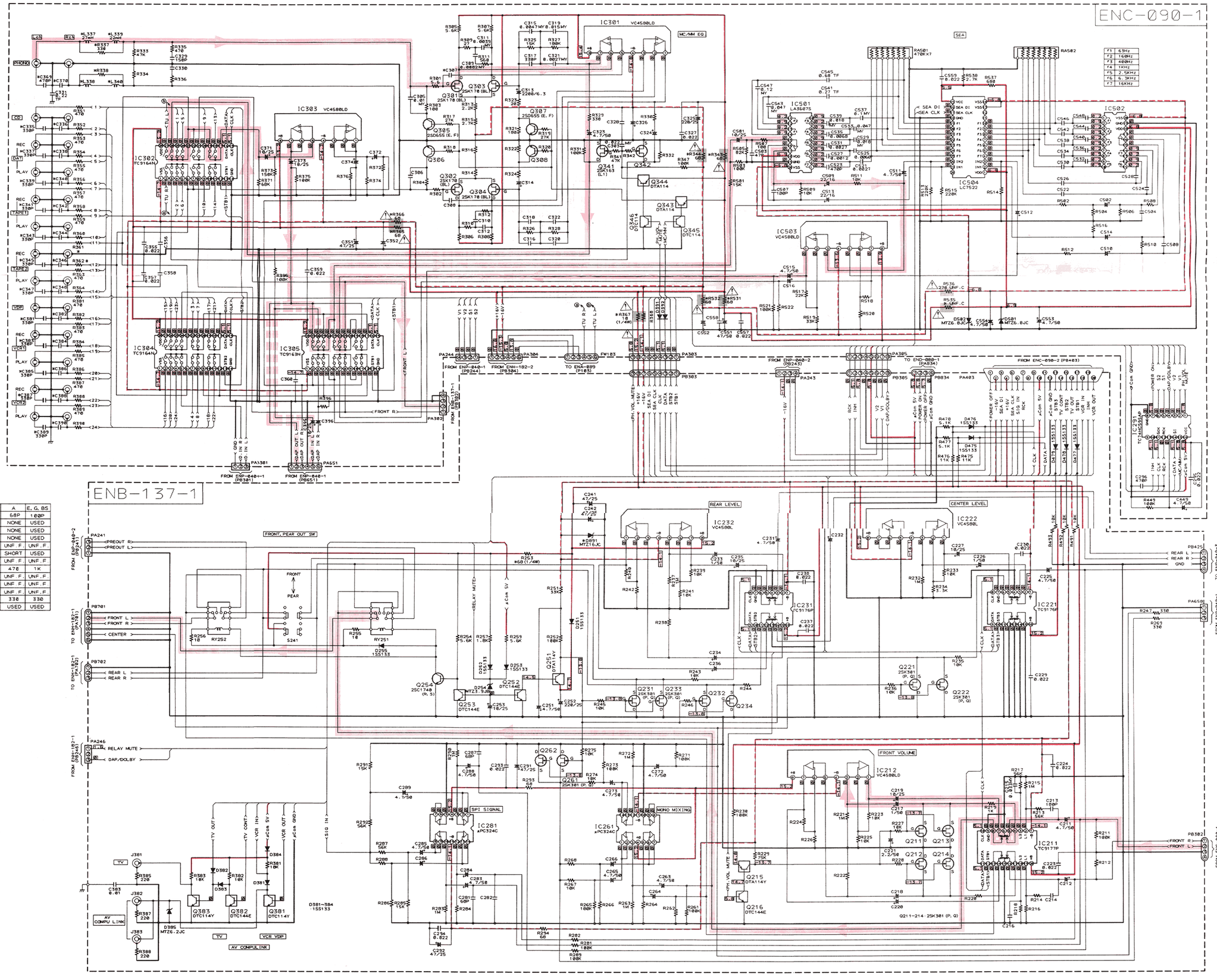

MARK	J	C	U	A	E, G, BS
C307, C308	68P	68P	68P	68P	180P
C335-C348	NONE	NONE	NONE	NONE	USED
C369, C370	NONE	NONE	NONE	NONE	USED
L337-L340	NONE	NONE	NONE	NONE	USED
R253	UNF.C.	UNF.F.	UNF.F	UNF.F.	UNF.F.
R337, R338	SHORT	SHORT	SHORT	SHORT	USED
R343, R344	UNF.C.	UNF.F.	UNF.F	UNF.F	UNF.F
R361, R362	470	470	470	470	1K
R365, R366	UNF.C.	UNF.F.	UNF.F.	UNF.F.	UNF.F.
R367, R368	UNF.C.	UNF.F.	UNF.F.	UNF.F.	UNF.F.
R531, R532	UNF.C.	UNF.F.	UNF.F.	UNF.F.	UNF.F.
R535	220	220	330	330	330
D891	NONE	NONE	USED	USED	USED

■ Source Selector, SEA & System Control (ENC-090)

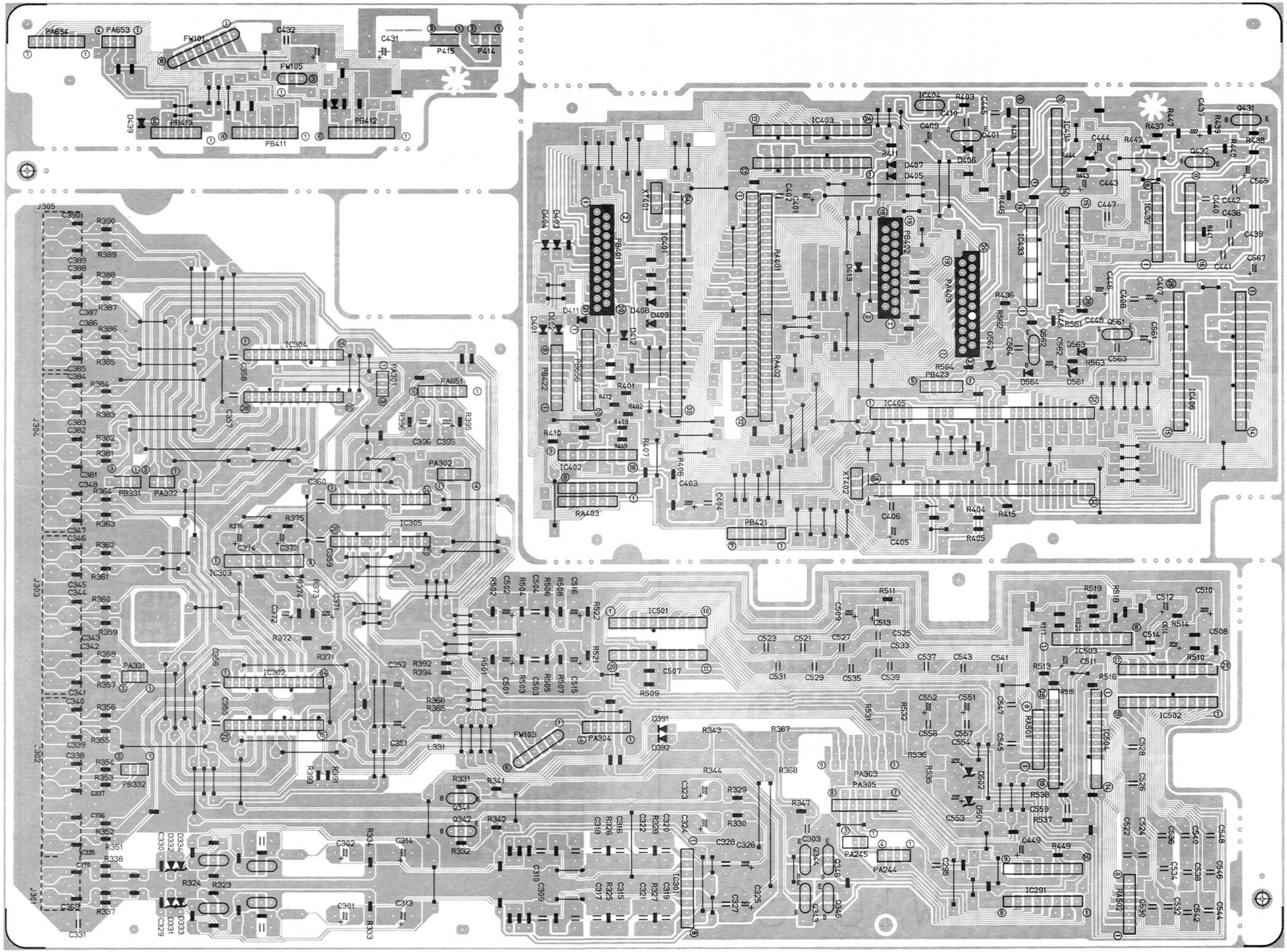

(No. 20284)

■ Tuner Section

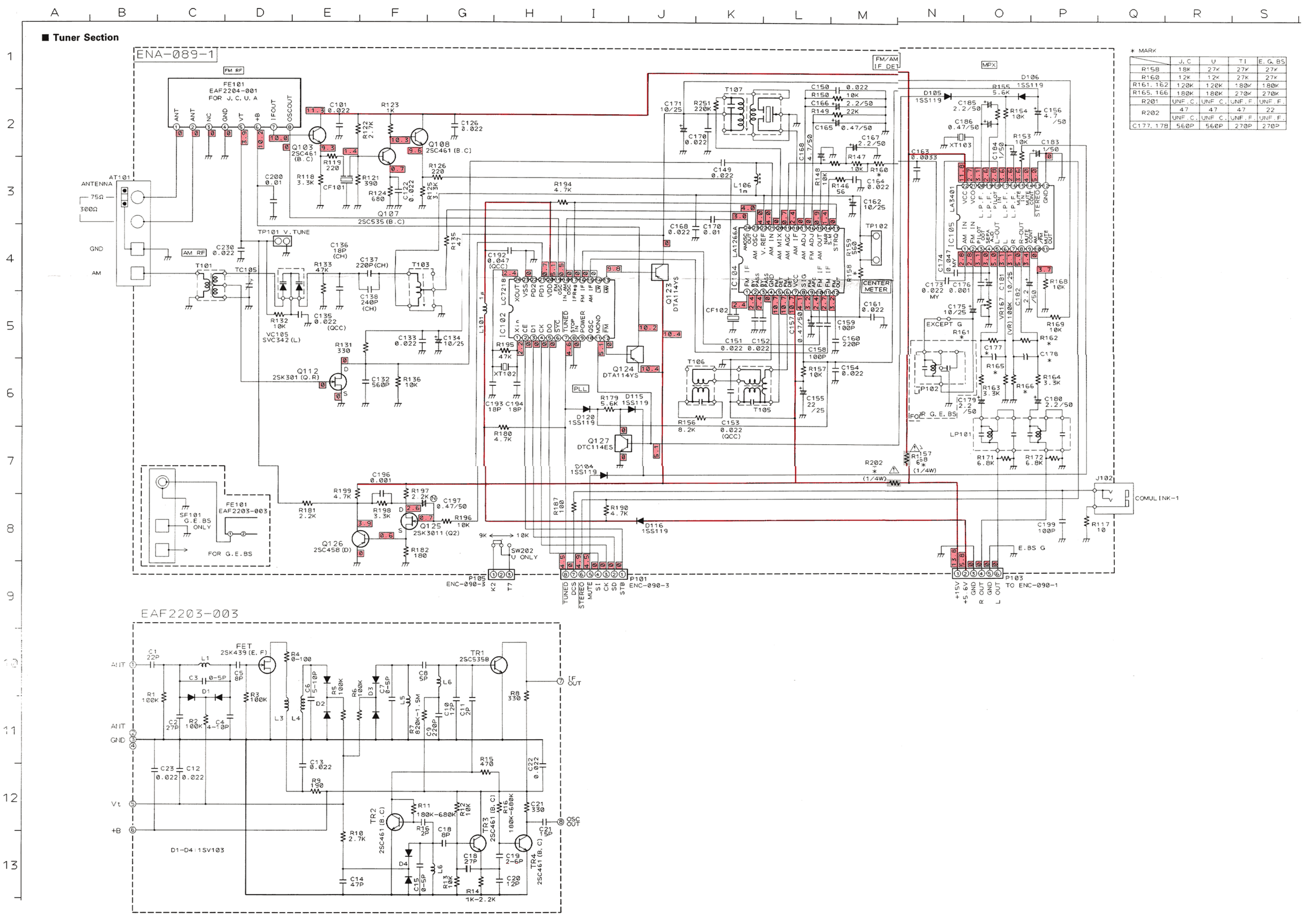

* MARK

	J.C	U	TI	E.G.BS
R158	18K	27K	27K	27K
R160	12K	12K	27K	27K
R161, 162	120K	120K	180K	180K
R165, 166	180K	180K	270K	270K
R201	UNF.C.	UNF.C.	UNF.F.	UNF.F.
R202	47	47	47	22
	UNF.C.	UNF.C.	UNF.F.	UNF.F.
C177, 178	560P	560P	270P	270P