KENWOOD

STEREO CONTROL AMPLIFIER

MODEL-700C

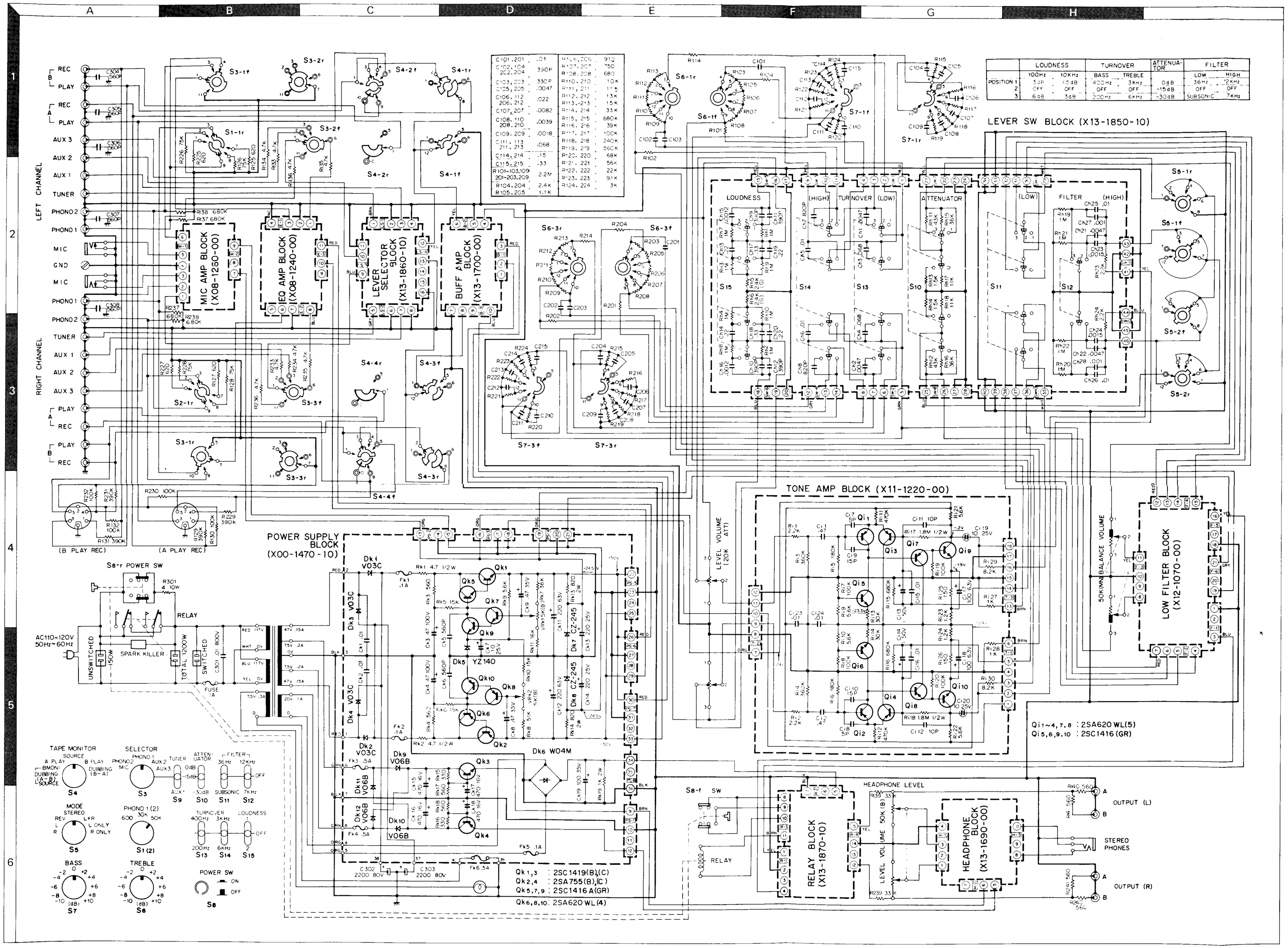

	LOUDNESS		TURNOVER		ATTENUATOR	FILTER	
	100Hz	10KHz	BASS	TREBLE		LOW	HIGH
POSITION 1	3.2P	15.5dB	400Hz	3KHz	0dB	36Hz	12KHz
2	OFF	OFF	OFF	OFF	-15dB	OFF	OFF
3	6.5dB	3dB	200Hz	6KHz	-30dB	SUBSONIC	7KHz

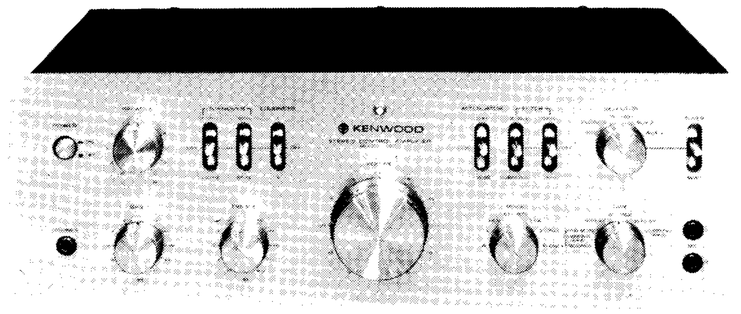

SPECIFICATIONS

Total Harmonic Distortion	0.04% at rated output voltage into 50 kΩ	
Inter Modulation Distortion (60 Hz : 7 kHz = 4 : 1)	0.04% at rated output voltage into 50 kΩ	
Input Sensitivity and Impedance		
Phono 1	2.5 mV. 50 K ohms 30 K ohms 600 ohms	
Phono 2	2.5 mV. 50 K ohms 30 K ohms 600 ohms	
Tuner	150 mV. 100 K ohms	
AUX 1, 2, 3	150 mV. 100 K ohms	
Tape Play A, B	150 mV. 100 K ohms	
Mic	2.5 mV. 600 ohms	
Maximum Input Voltage (rms)		
Phono 1, 2	400 mV	T.H.D. 0.1% at 1,000 Hz
Signal to Noise Ratio (IHF)		
Phono 1, 2 into 5 mV	70 dB	
Tuner	85 dB	
AUX 1, 2, 3	85 dB	
Tape Play A, B	85 dB	
Mic	70 dB	
Attenuator	0 dB	-15 dB -30 dB
Output Voltage and Impedance		
Tape Rec. A, B (Pin)	150 mV	4.7 K ohms
(Din connector)	30 mV	80 K ohms
Pre-out A, B	1.5 V	600 ohms
Frequency Response		
Phono 1, 2	RIAA Standard Curve ±0.3 dB	
Tuner, AUX, Tape Play	20 Hz ~ 20 kHz $^{+0}_{-0.3}$ dB	
Tone Controls		
Bass Turnover 200 Hz	±10 dB at 50 Hz	
Bass Turnover 400 Hz	±10 dB at 100 Hz	
Treble Turnover 3 kHz	±10 dB at 10,000 Hz	
Treble Turnover 6 kHz	±10 dB at 20,000 Hz	
Loudness Control (VR Max. -30 dB)	13.0, 26.0 dB at 100 Hz; 11.5, 23.0 dB at 10,000 Hz	
Low Filter 36 Hz	12 dB/oct	
Low Filter 18 Hz	12 dB/oct	
High Filter 7 kHz	6 dB/oct	
High Filter 12 kHz	6 dB/oct	
Phones Out	Max. 0.4V 20 mW 8 ohms	

GENERAL

Switches	
Input Selector	MIC, Phono 1, 2, Aux. 1, 2, 3, Tuner
Mode	R, L, REV, STEREO, L + R, L Only, R Only
Tape Monitor	SOURCE, A PLAY, B PLAY, DUBBING (A→B) B MON, DUBBING (A→B) SOURCE, DUBBING (B→A)
AC Outlet	Switched 2, Unswitched 1
Power Consumption	10 watts
Dimensions	W 17-5/16" (440mm), H 5-11/16" (145mm), D 11-13/16"(300mm)
Weight	20.9 lbs. (9.5 kg)

MODEL-700C MODEL-700C

MIC AMP BLOCK (X08-1260-00)

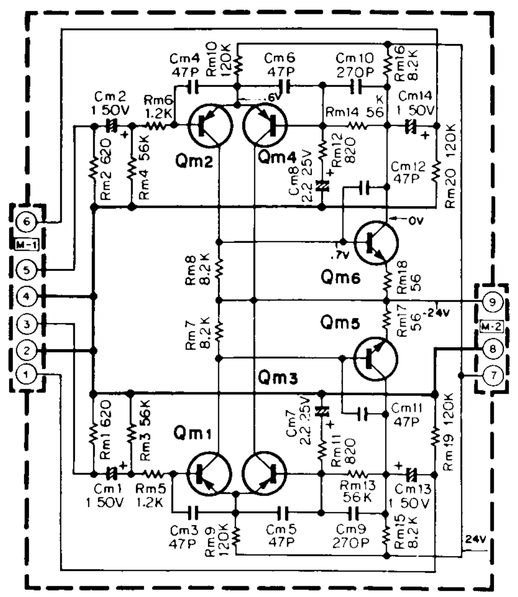

Qm1~4 : 2SA620 WL (4) or (5)
Qm5,6 : 2SC1416A (GR) or (BL)

EQ AMP BLOCK (X08-1240-00)

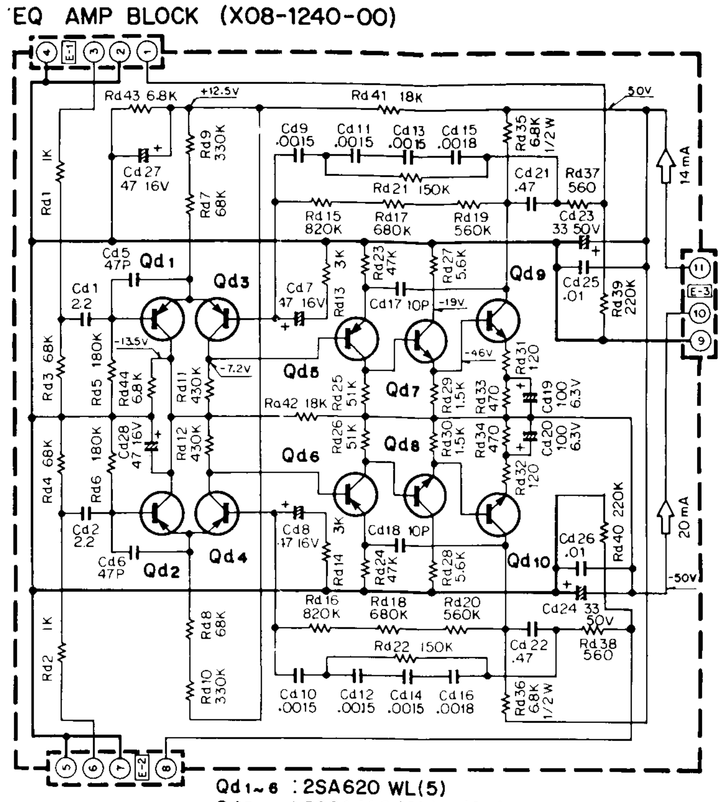

Qd1~6 : 2SA620 WL(5)
Qd7,8 : 2SC1416 (GR) or (BL)
Qd9,10 : 2SC1451 (V)

LEVER SELECTOR BLOCK (X13-1860-10)

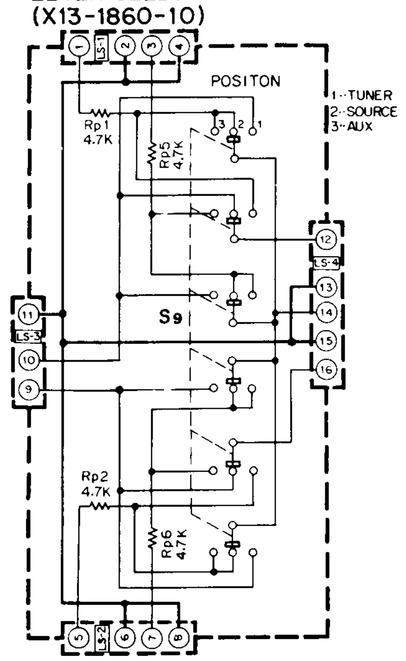

BUFF AMP BLOCK (X13-1700-00)

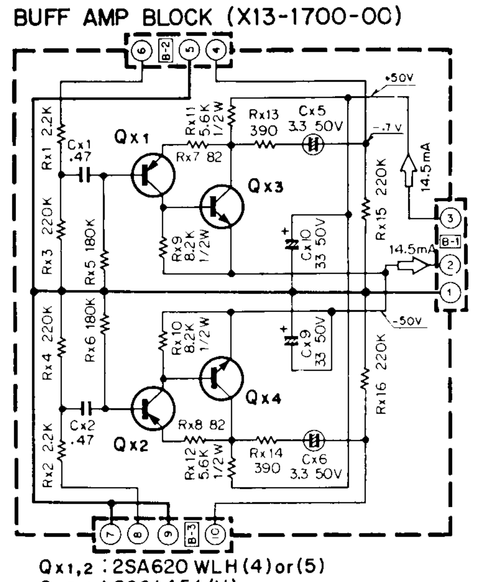

Qx1,2 : 2SA620 WLH (4) or (5)
Qx3,4 : 2SC1451 (V)

RELAY BLOCK (X13-1870-10)

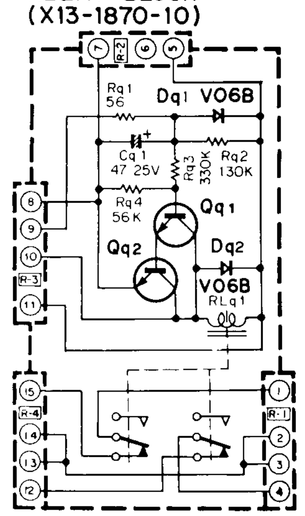

Qq1 : 2SC1416 (GR)
Qq2 : 2SD220

HEADPHONE BLOCK (X13-1690-00)

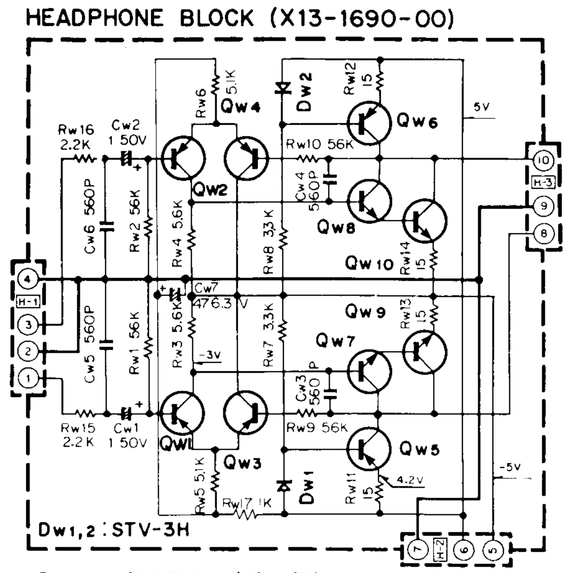

Dw1,2 : STV-3H

Qw1~4 : 2SA620 WL (4) or (5)
Qw5,6 : 2SA673A
Qw7,8 : 2SC945 P,Q,R.
Qw9,10 : 2SC1213A

LOW FILTER BLOCK (X12-1070-00)

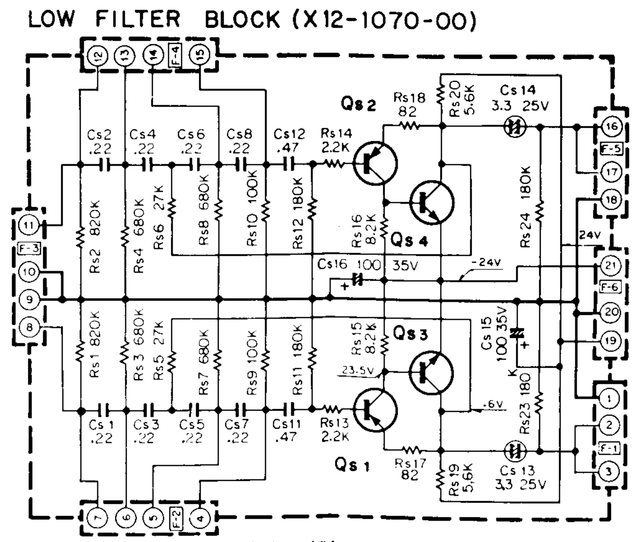

Qs1,2 : 2SA620 WL (4) or (5)
Qs3,4 : 2SC1416A (GR) or (BL)

REVISED CIRCUITS

For the sets sold in Europe. **W TYPE**

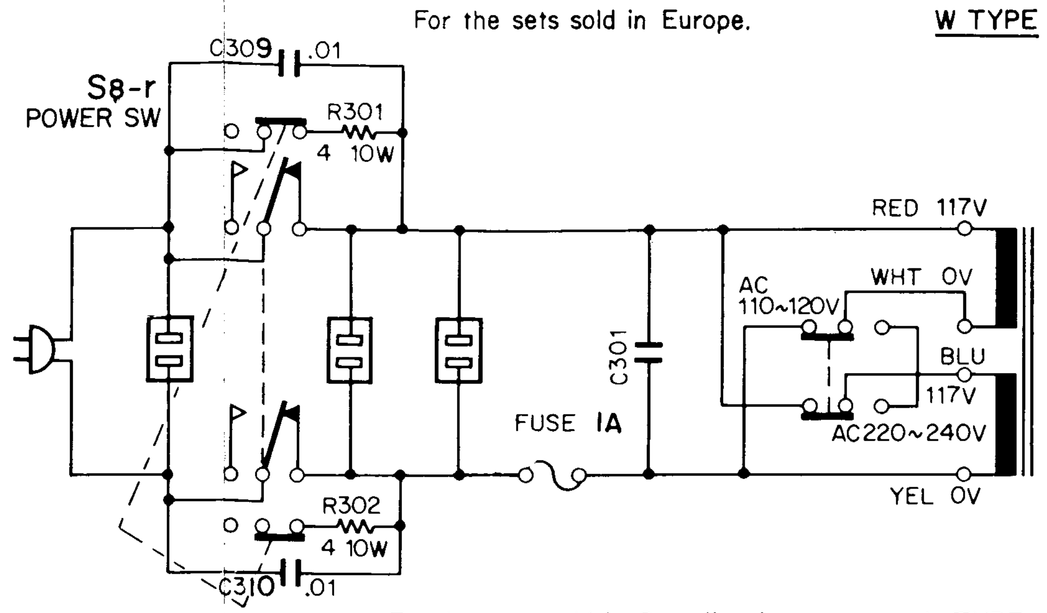

For the sets sold in Scandinavia. **L TYPE**

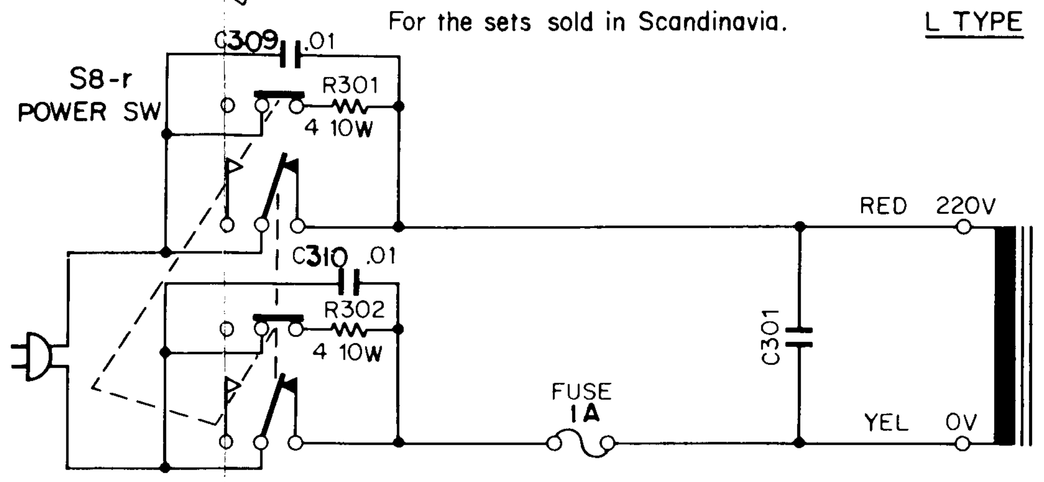
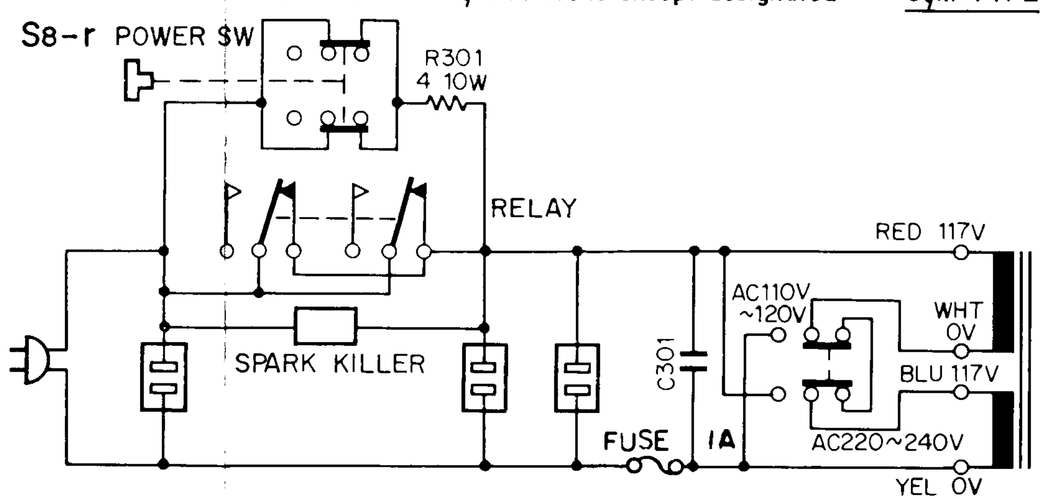
For the sets sold in PX, and areas except designated **U,M TYPE**