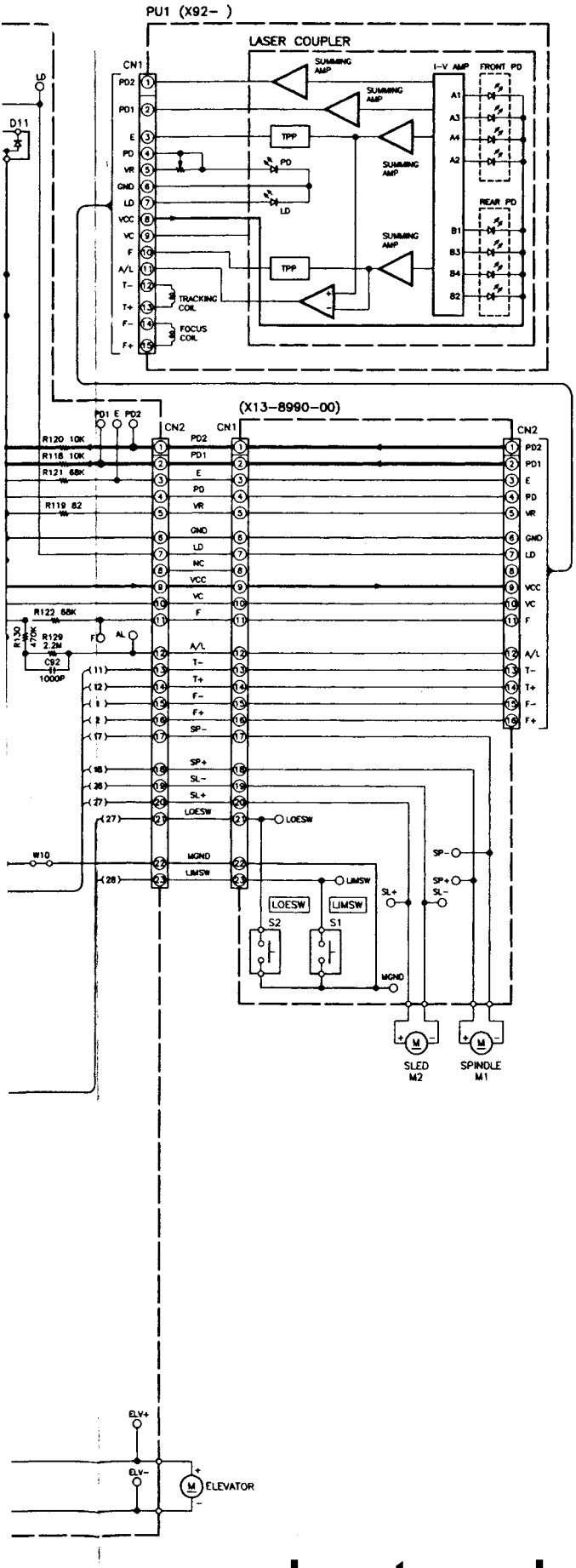

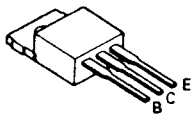

2SB1565

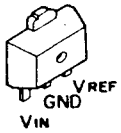

TA78L05F

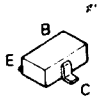

DTA124EK
DTA143EK
DTC124EK
DTC144EK
2SA1362
2SC2412K
2SD2114K

DA204K

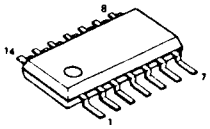

LC89170M

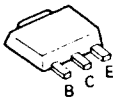

2SB1188

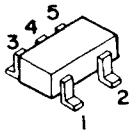

PST9137NR

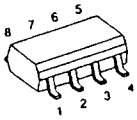

NJM5532MD

DAN202K

CAUTION: For continued safety, replace safety critical components only with manufacturer's recommended parts (refer to parts list). ⚠ indicates safety critical components. To reduce the risk of electric shock, leakage-current or resistance measurements shall be carried out (exposed parts are acceptably insulated from the supply circuit) before the appliance is returned to the customer.

DC voltages are as measured with a high impedance voltmeter. Values may vary slightly due to variations between individual instruments or/and units.

www.electronicsrepair.net

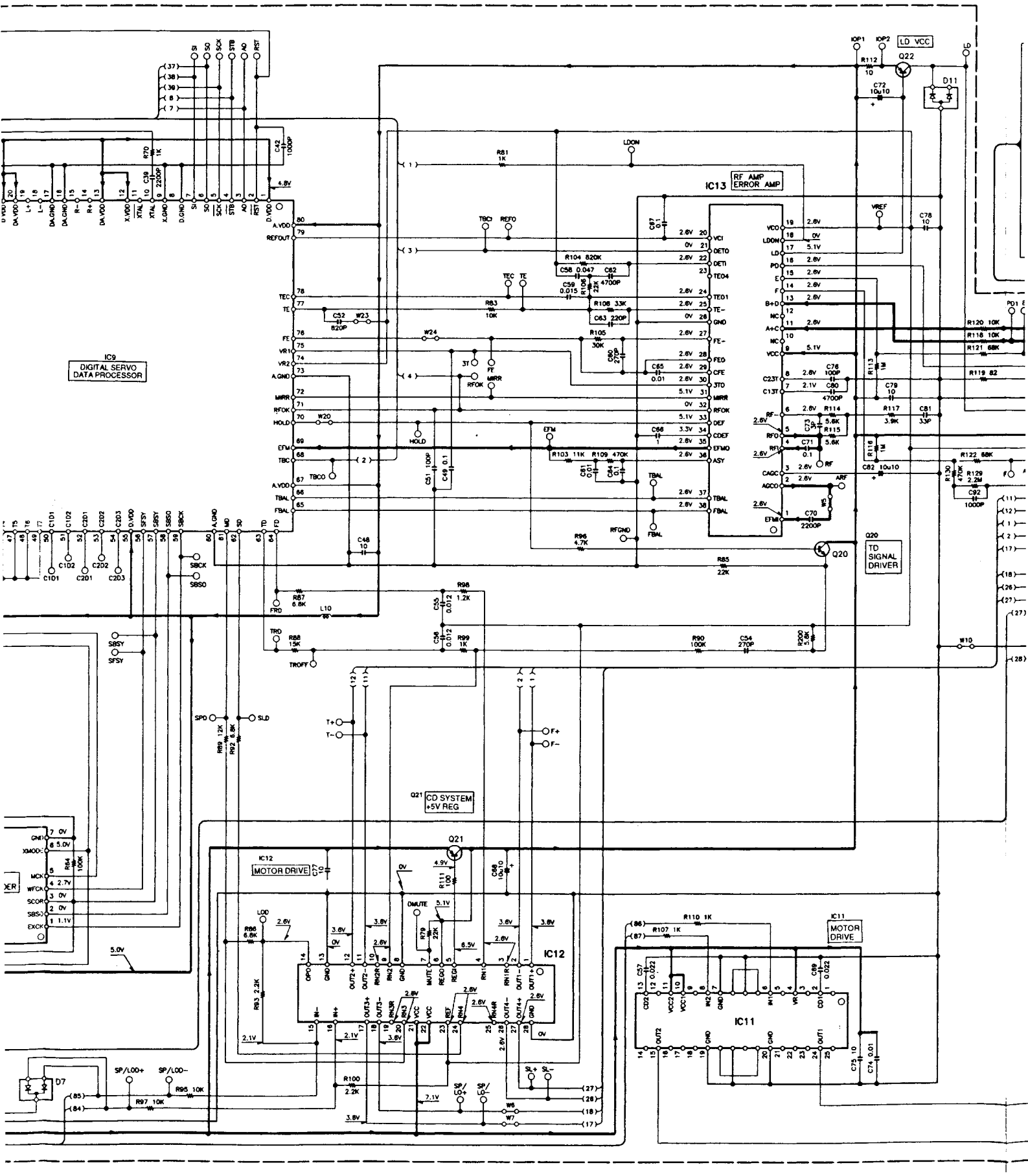

www.electronicsrepair.net

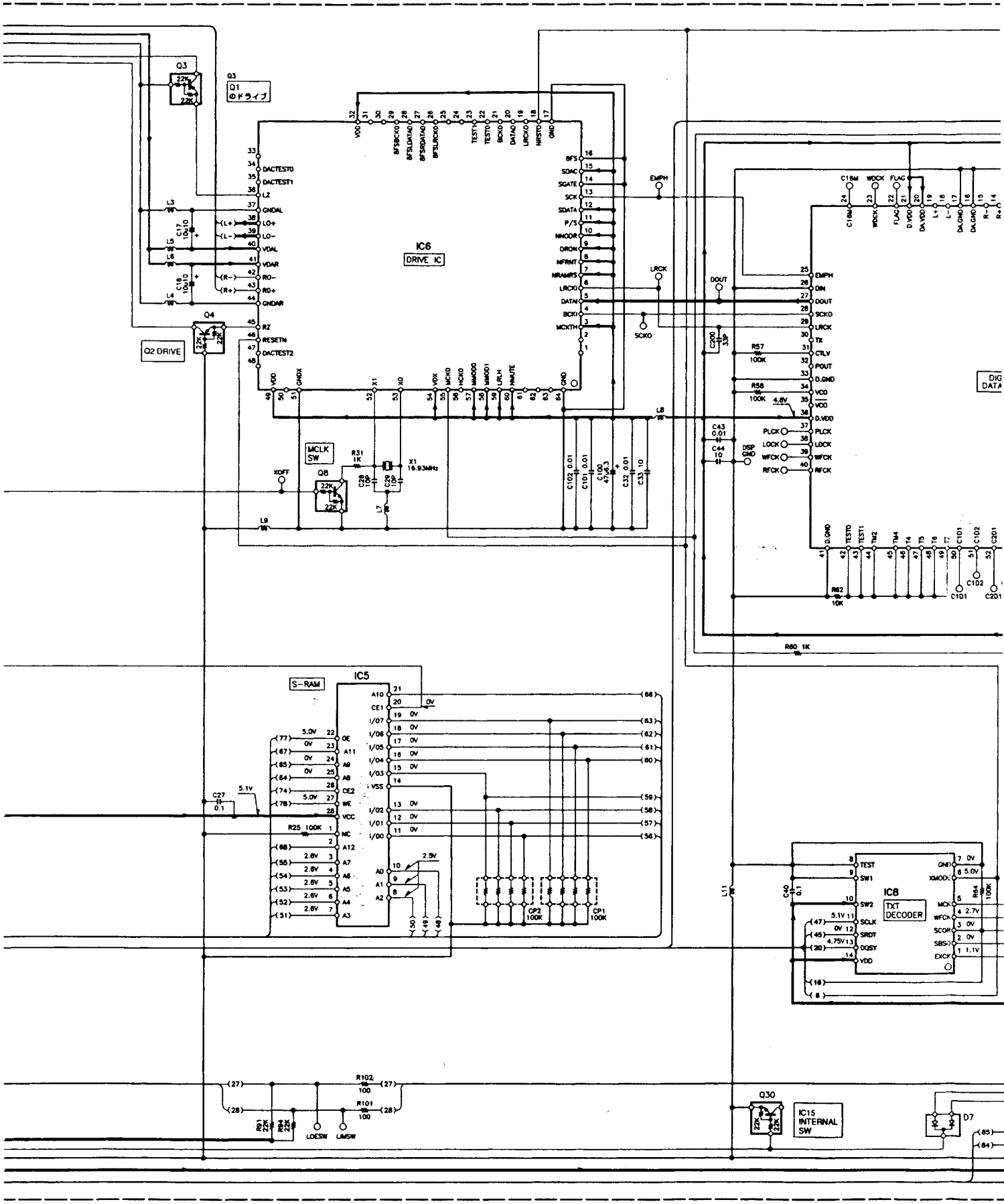

www.electronicsrepair.net

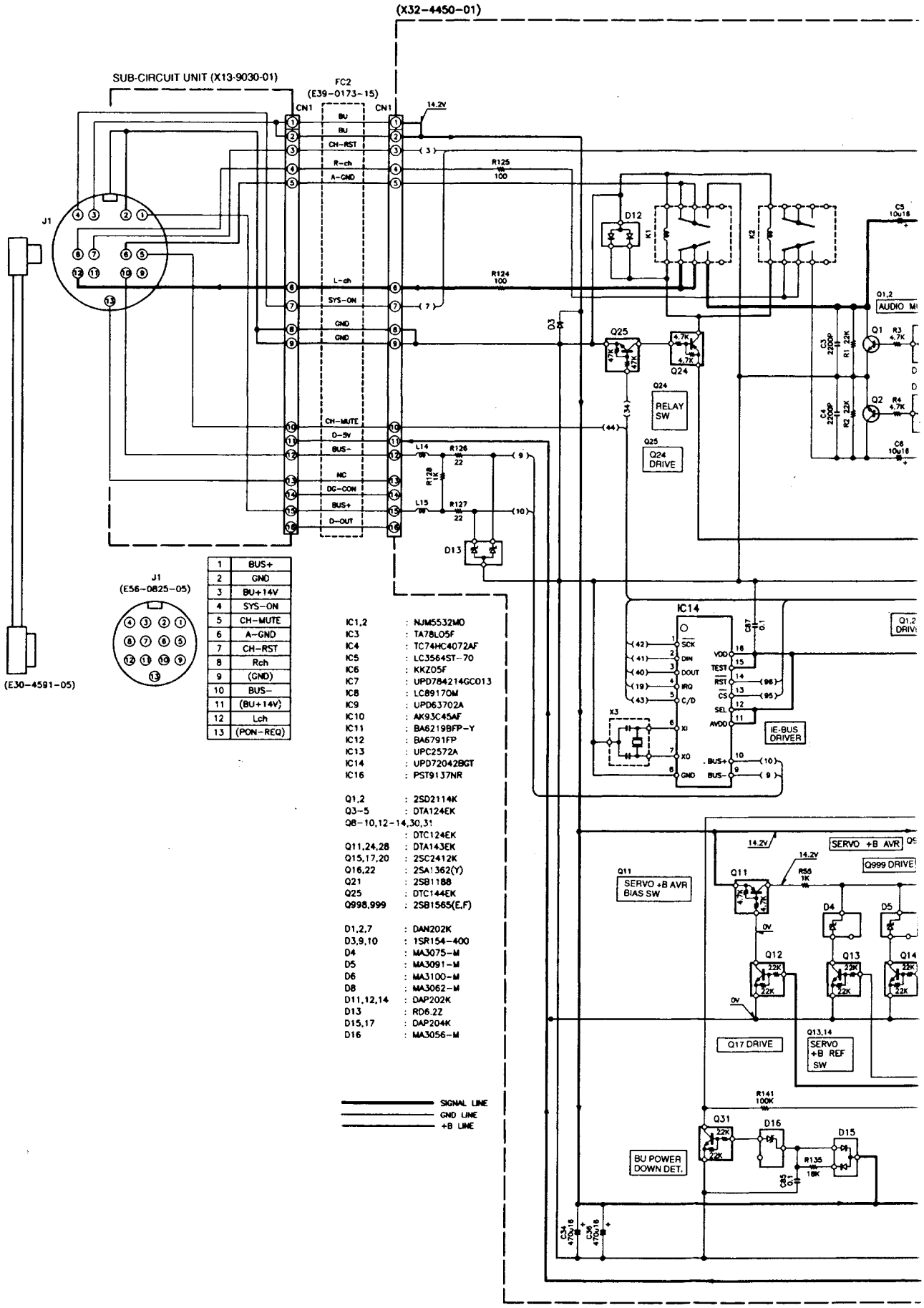

1	BUS+
2	GND
3	BU+14V
4	SYS-ON
5	CH-MUTE
6	A-GND
7	CH-RST
8	Rch
9	(GND)
10	BUS-
11	(BU+14V)
12	Lch
13	(PON-REQ)

IC1,2	: NJM5532MD
IC3	: TA78L05F
IC4	: TC74HC4072AF
IC5	: LC3564ST-70
IC6	: KKZ05F
IC7	: UPD784214GC013
IC8	: LC89170M
IC9	: UPD63702A
IC10	: AK93C45AF
IC11	: BA6219BFP-Y
IC12	: BA6791FP
IC13	: UPC2572A
IC14	: UPD72042BGT
IC16	: PST9137NR
Q1,2	: 2SD2114K
Q3-5	: DTA124EK
Q8-10,12-14,30,31	: DTC124EK
Q11,24,28	: DTA143EK
Q15,17,20	: 2SC2412K
Q16,22	: 2SA1362(Y)
Q21	: 2SB1188
Q25	: DTC144EK
Q998,999	: 2SB1565(E,F)
D1,2,7	: DAN202K
D3,9,10	: 1SR154-400
D4	: MA3075-M
D5	: MA3091-M
D6	: MA3100-M
D8	: MA3062-M
D11,12,14	: DAP202K
D13	: RD6.2Z
D15,17	: DAP204K
D16	: MA3056-M

www.electronicsrepair.net

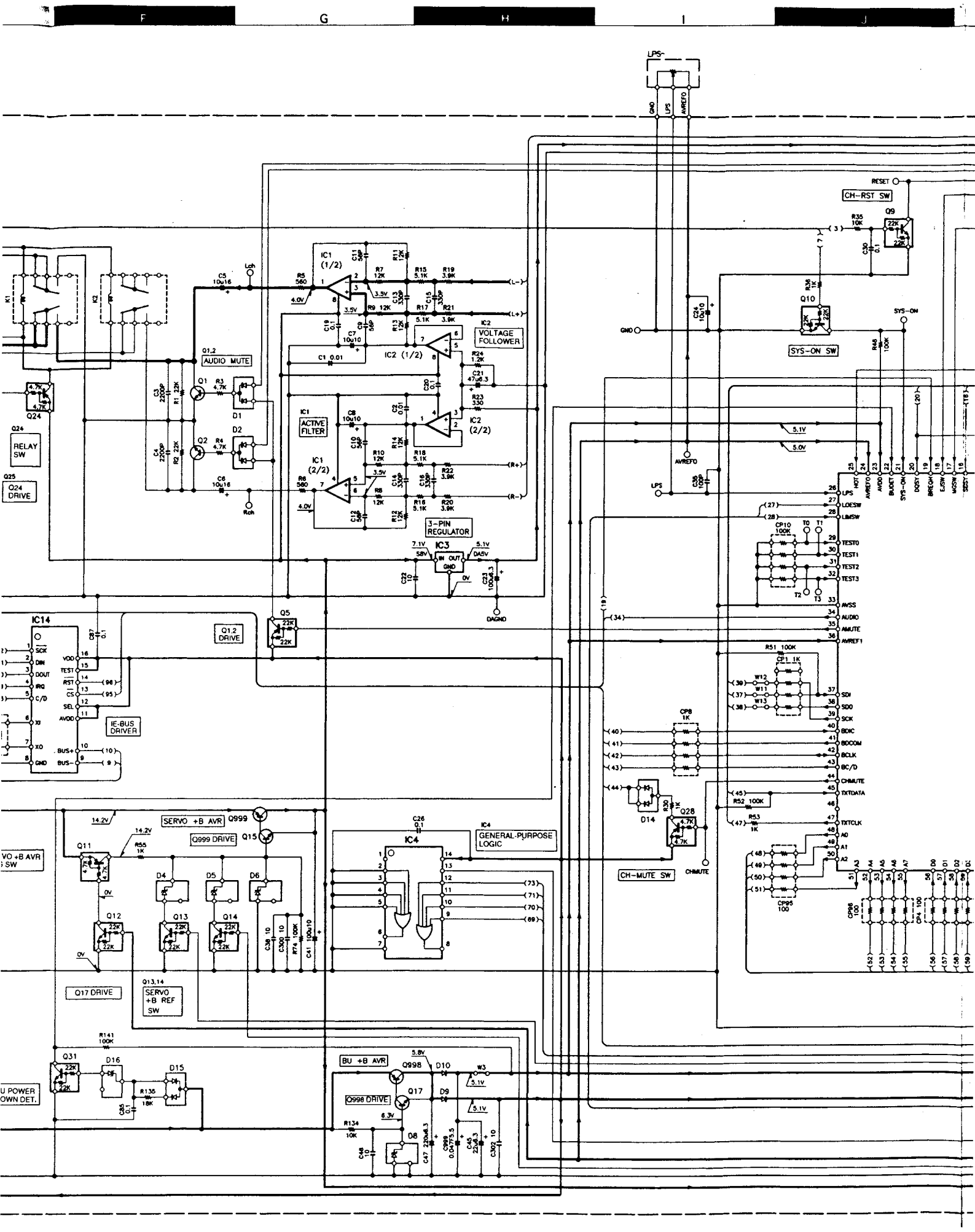

www.electronicsrepair.net

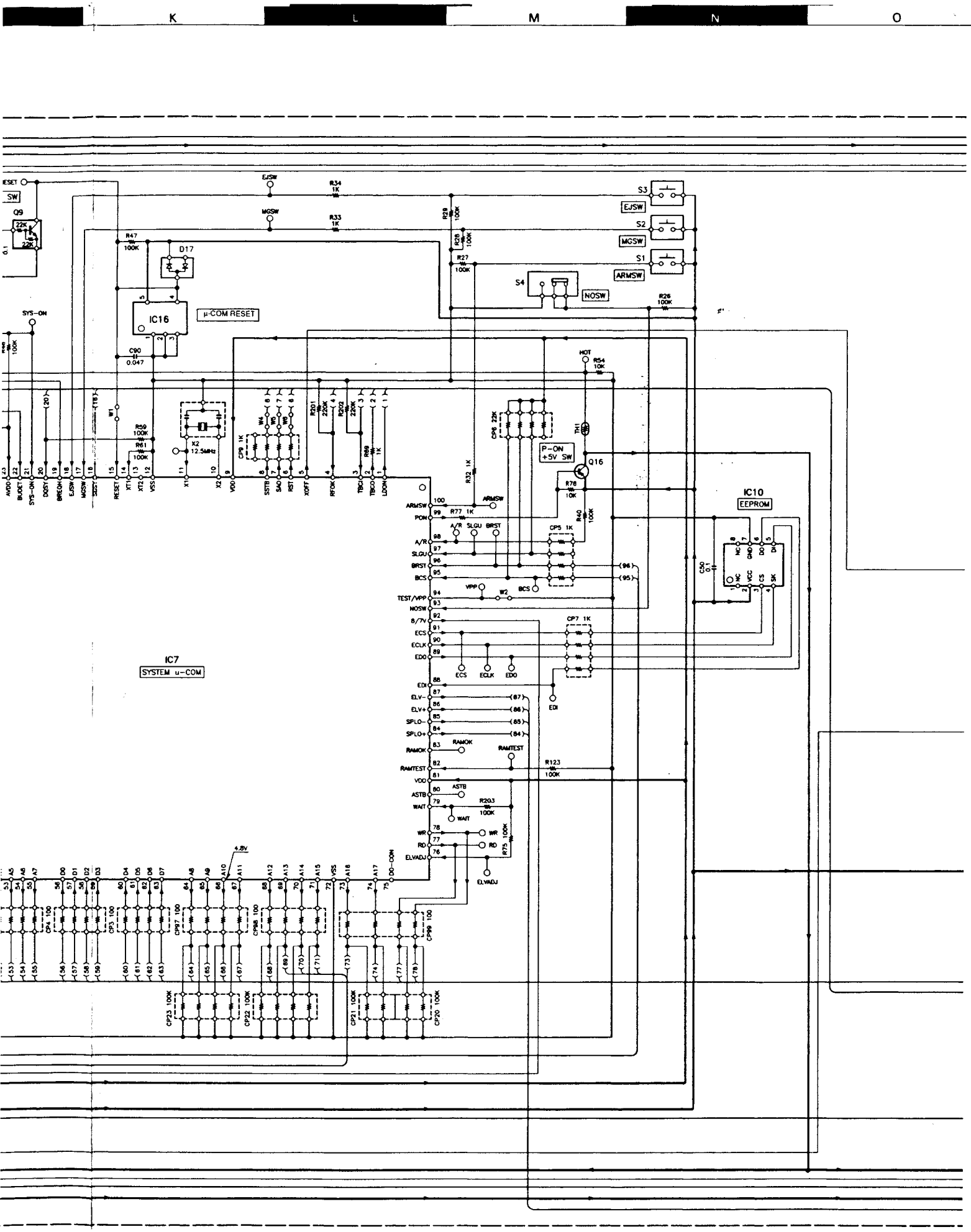

www.electronicsrepair.net