KENWOOD

HI/FI STEREO COMPONENTS

SERVICE MANUAL

KA-1400G
KA-1400B

STEREO AMPLIFIER

www.hifiengine.com

CONTENTS

EXTERNAL & TOP VIEW 3
DISASSEMBLY 4
PACKING 4
BLOCK DIAGRAM 5
ADJUSTMENTS 5
MODIFICATION PARTS LIST 6,7
PARTS LIST
- TOTAL 8
- POWER SUPPLY (X00-1610-01,10,11,61) 8
- MAIN AMP (X07-1360-10) 8,9
- TONE AMP (X08-1380-10) 9
- SWITCH (X13-2040-10) 9
- PRE AMP (X13-2050-10) 9

PC BOARD
- POWER SUPPLY 10
- MAIN AMP 10
- TONE AMP 11
- SWITCH 11
- PRE AMP 11

TROUBLESHOOTING 12
SEMICONDUCTOR SUBSTITUTIONS 12
SCHEMATIC DIAGRAM 13
SPECIFICATIONS 14

The difference between the model G and B is the finish of color, G with golden front panel and knobs; B with black front panel and knobs, and sold to European and Scandinavian countries only.

www.hifiengine.com

EXTERNAL & TOP VIEW

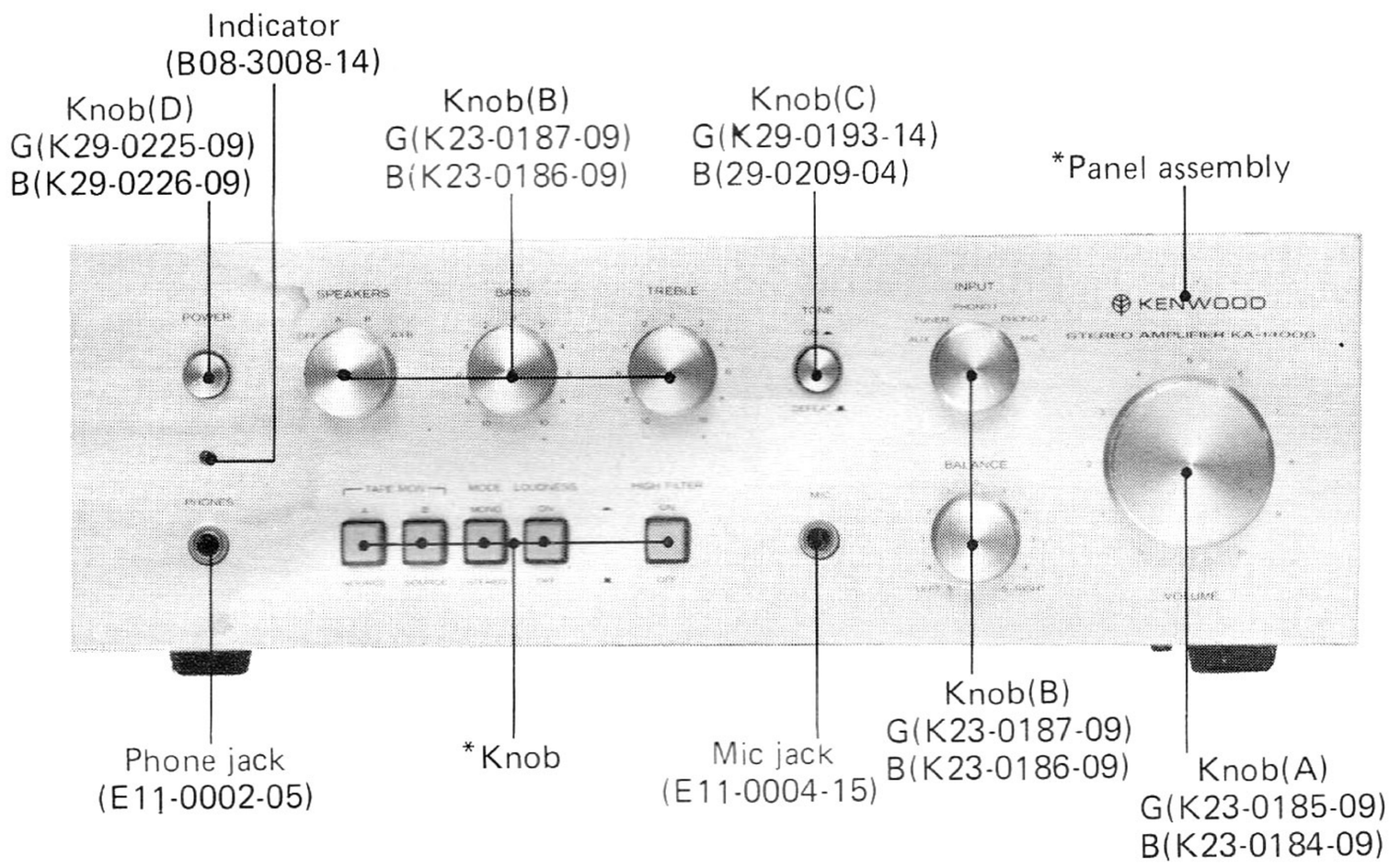

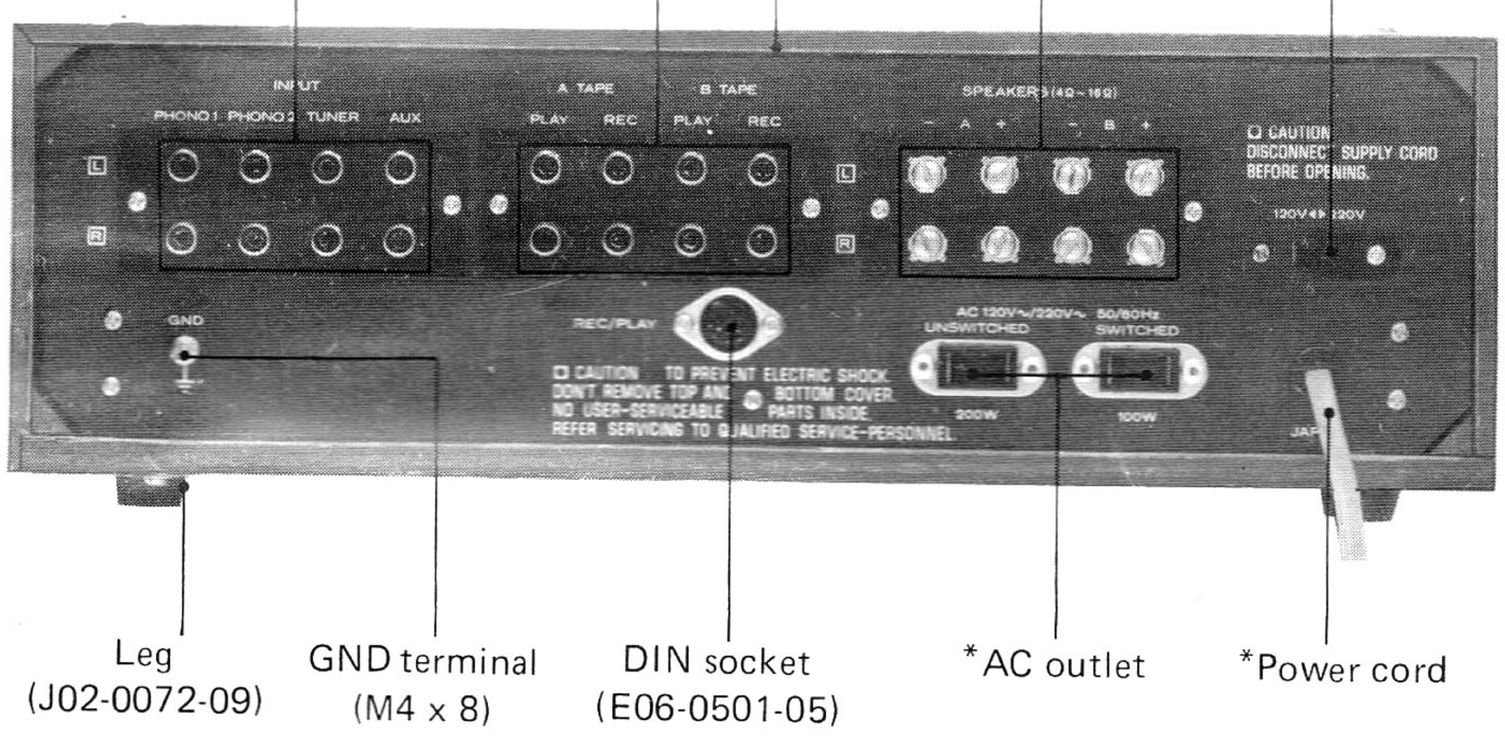

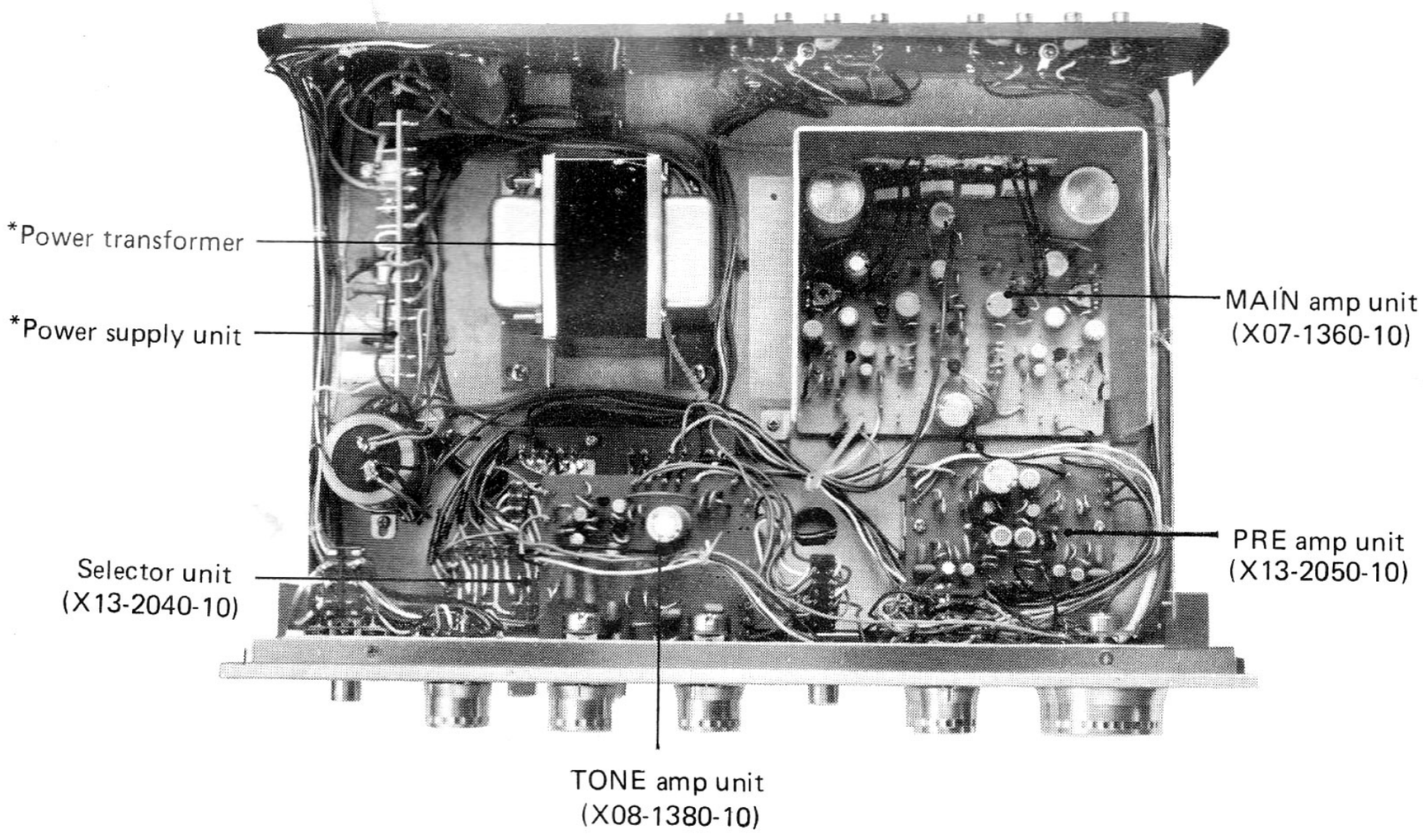

*Refer to parts list

DISASSEMBLY/PACKING

DISASSEMBLY

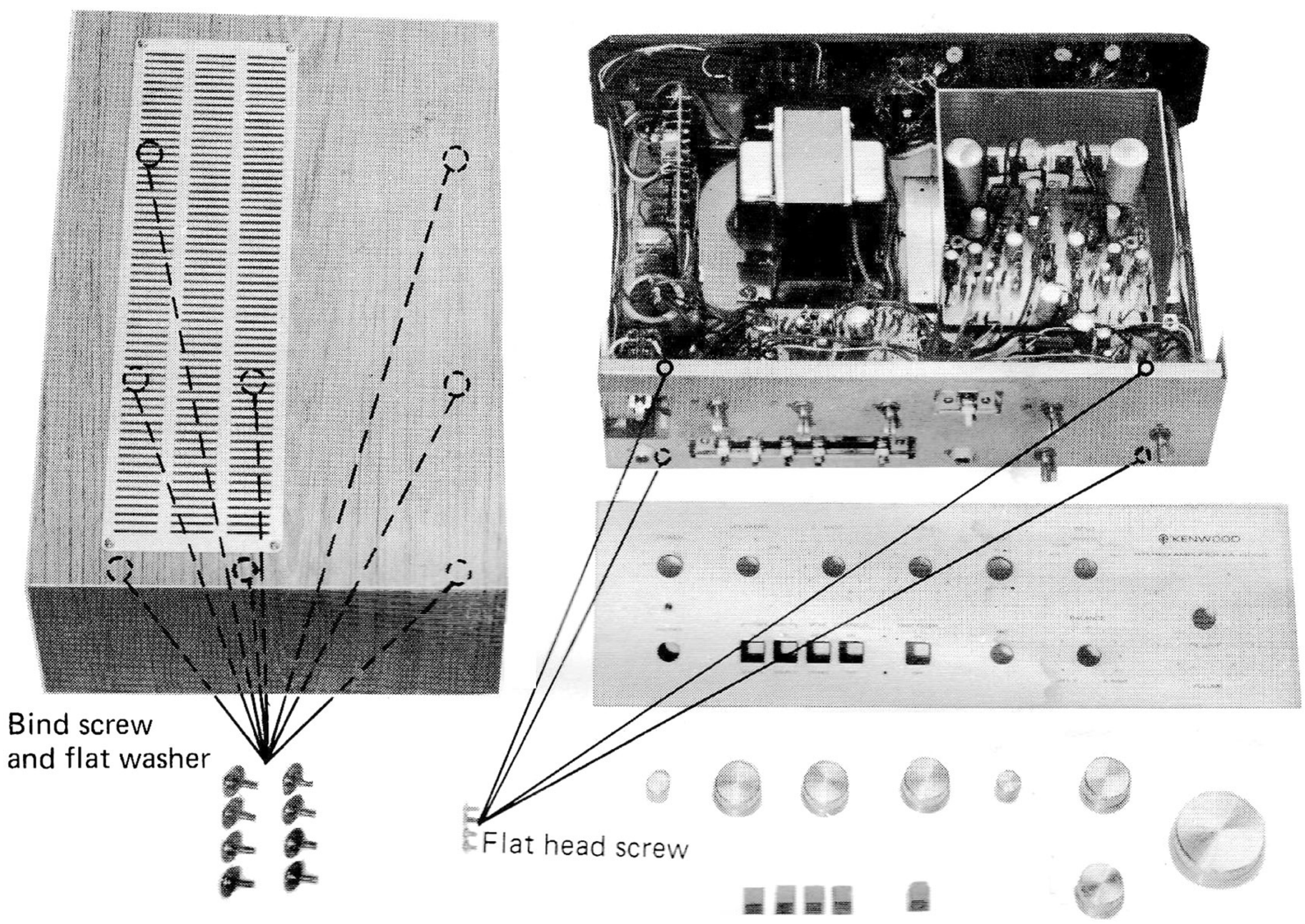

PACKING

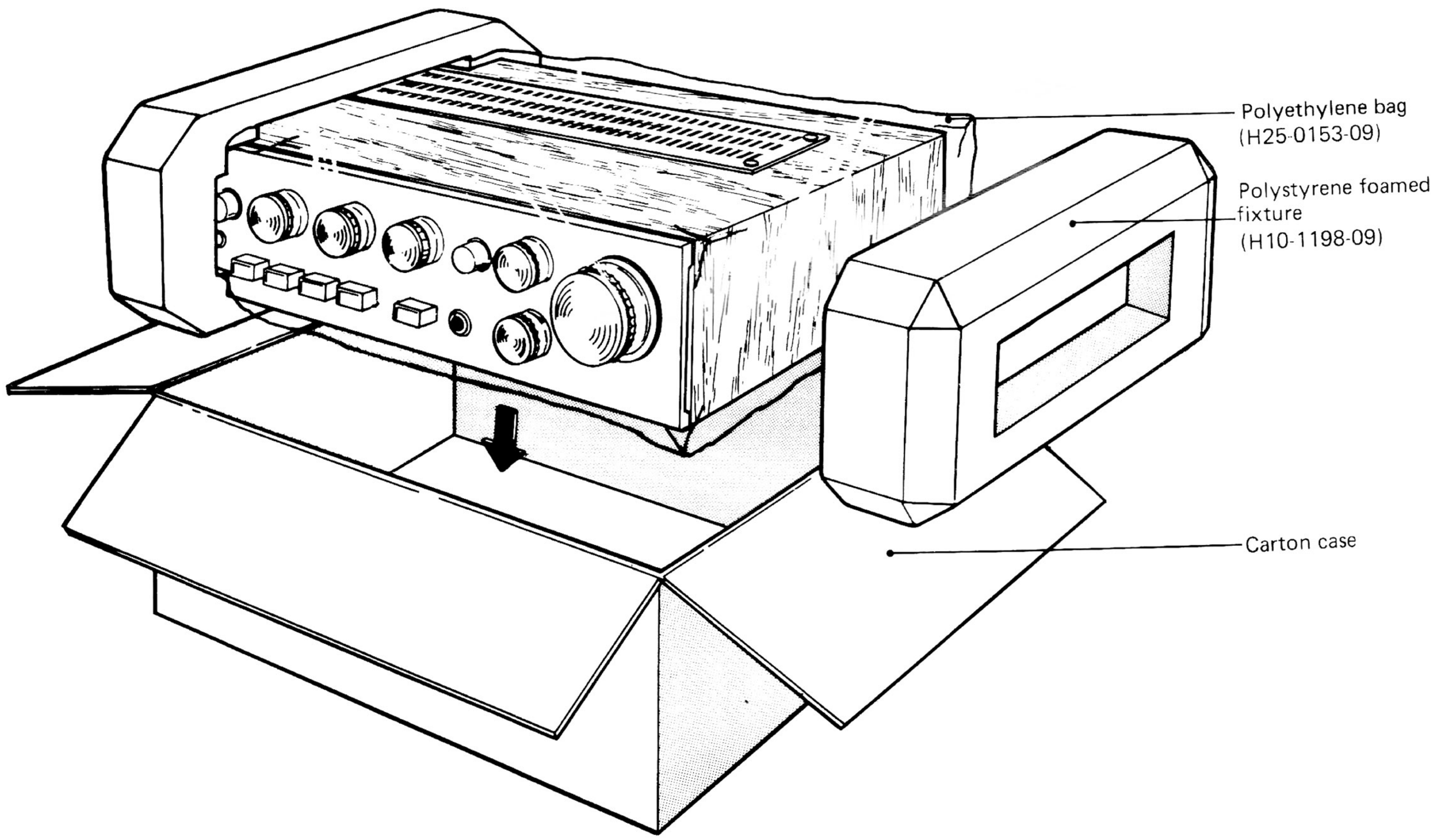

BLOCK & LEVEL DIAGRAM / ADJUSTMENTS

BLOCK DIAGRAM

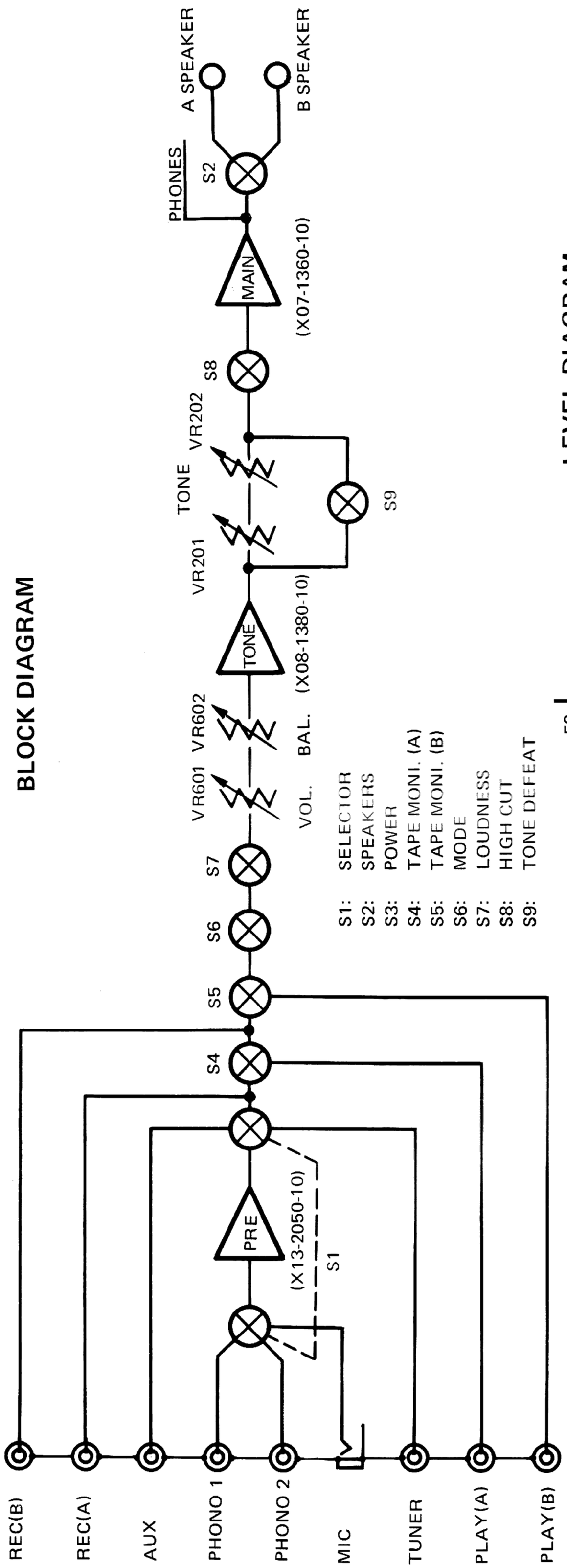

LEVEL DIAGRAM

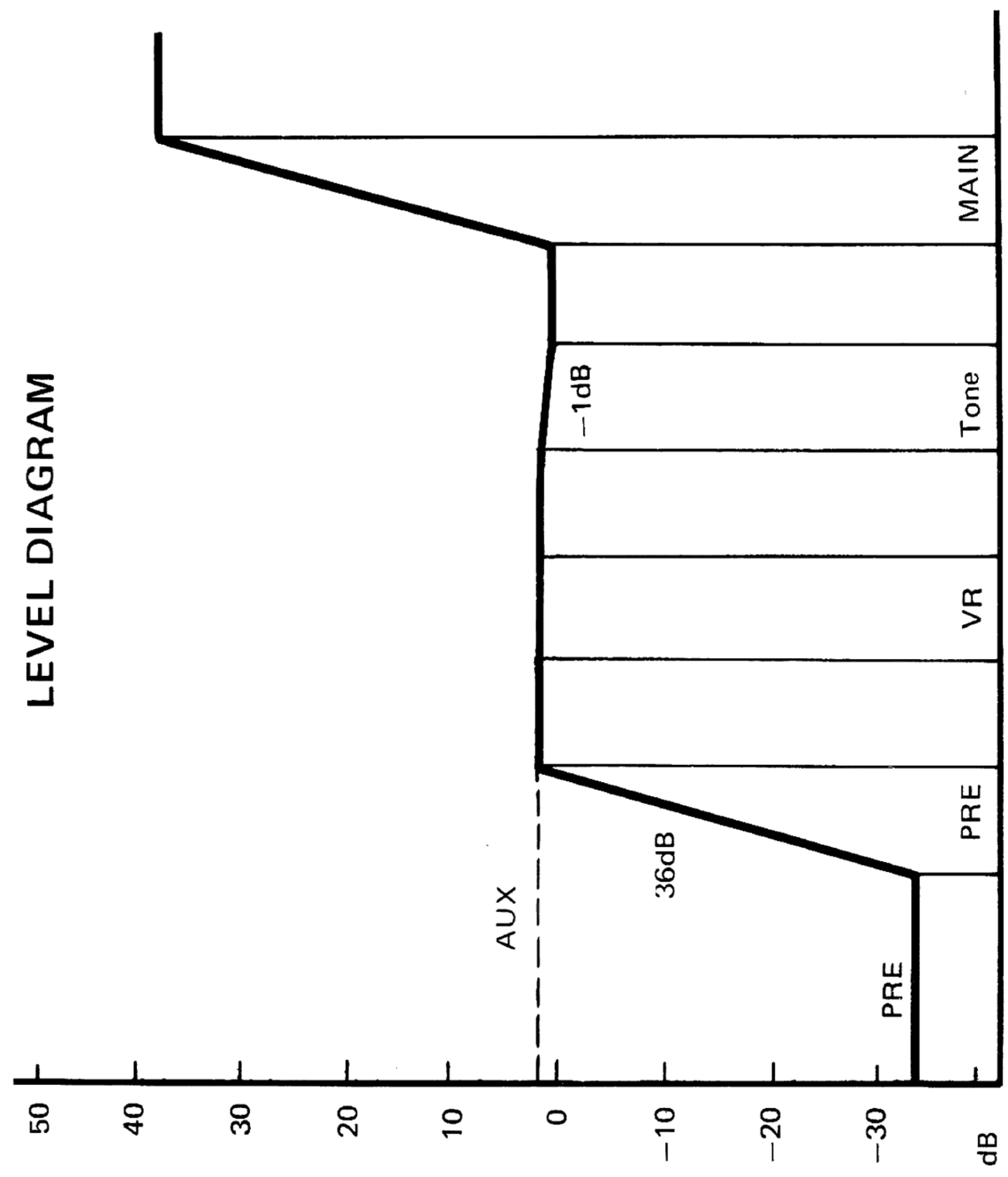

ADJUSTMENTS

CENTER VOLTAGE

Using the tester measure the voltage between the GND and collector of the power transistor Q15. If the tester indicates approximately 48V, it is normal. And also measure the voltage between the GND and collector of power transistor Q16. If the tester indicates approximately 24V, it is normal. If not, adjust the pc trimmer potentiometer SFR301 so that the tester indicates 24V.

BIAS CURRENT

Before checking the bias current, adjust the center voltage and ture on the power switch in a few minutes, adjust the pc trimmer potentiometer SFR303 so that the tester coupling to the collector of power transistor Q15 indicates 20mA. And also check the waveforme to be correct feeding the signal to set.

www.hifiengine.com

MODIFICATION PARTS LIST

Ref. No.	USA (K)	Canada (P)	General export (M)	South Africa (S)	England (T)	Australia X	Europe (WG)	Europe (WB)	Scandinavia (LG)	Scandinavia (LB)	Description
–	A20-0873-00	A20-0873-00	A20-0873-00	A20-0873-00	A20-0875-00	A20-0873-00	A20-0873-00	A20-0874-00	A20-0873-00	A20-0874-00	Front panel
–	A23-0562-09	A23-0562-09	A23-0540-09	A23-0540-09	A23-0540-09	A23-0540-09	A23-0576-09	A23-0576-09	A23-0540-09	A23-0540-09	Rear panel
–	B40-1203-09	B40-1206-09	B40-1202-09	B40-1202-09	B40-1207-09	B40-1202-09	B40-1210-09	B40-1205-09	B40-1209-09	B40-1204-09	Model name plate
–	–	–	–	–	–	–	B42-0024-04	B42-0024-04	–	–	SEV sticker
–	B50-1308-00	B50-1308-00	B50-1308-00	B50-1308-00	B50-1309-00	B50-1308-00	B50-1308-00	B50-1308-00	B50-1308-00	B50-1308-00	Instruction manual
–	–	–	B58-0101-00	B58-0101-00	B58-0101-00	B58-0101-00	B58-0157-00	B58-0157-00	–	–	Power voltage selector card
–	–	–	B58-0003-00	B58-0003-00	B58-0003-00	B58-0003-00	B50-0156-00	B50-0156-00	–	–	Power supply caution card
–	B58-0043-00	–	–	–	–	–	–	–	–	–	Carton case caution card
–	B46-0002-00	B46-0021-00	–	–	–	–	–	–	–	–	Warranty card
–	B42-0359-00	B42-0359-00	–	–	–	–	–	–	–	–	Caution sticker
C607	C90-0145-05	C90-0145-05	C90-0145-05	C90-0145-05	C90-0145-05	C90-0145-05	–	–		–	Film capacitor 0.01μF 250V
C606	–	–	–	–	–	–	CK45E3D103P	CK45E3D103P	CK45E3D103P	CK45E3D103P	Ceramic capacitor 0.01μF 2KV
–	–	–	D32-0075-04	D32-0075-04	D32-0075-04	D32-0075-04	D32-0075-04	D32-0075-04	–	–	Switch stopper
–	E30-0181-05	E30-0181-05	E30-0034-05	040-0304-05	040-0304-05	E30-0185-05	E30-0176-05	E30-0176-05	E30-0292-05	E30-0292-05	Power cord
–	E08-0224-09	E08-0224-09	E08-0224-09	E08-0224-09	E08-0224-09	E08-0224-09	E08-0224-09	E08-0224-09	–	–	AC outlet x 2
–	–	–	–	–	–	–	–	–	F19-0186-09	F19-0186-09	Plate (A)
–	F19-0187-09	F19-0187-09	–	–	–	–	–	–	F19-0187-09	F19-0187-09	Plate (B)
–	–	–	–	–	–	–	F09-0003-05	F09-0003-05	F09-0003-05	F09-0003-05	Cover
–	K23-0185-09	K23-0185-09	K23-0185-09	K23-0185-09	K23-0185-09	K23-0185-09	K23-0185-09	K23-0184-09	K23-0185-09	K23-0184-09	Knob (A)
–	K23-0187-09	K23-0187-09	K23-0187-09	K23-0187-09	K23-0187-09	K23-0187-09	K23-0187-09	K23-0186-09	K23-0187-09	K23-0186-09	Knob (B) x 5
–	K29-0193-14	K29-0193-14	K29-0193-14	K29-0193-14	K29-0193-14	K29-0193-14	K29-0193-14	K29-0209-04	K29-0193-14	K29-0209-04	Button (C) (Power)
–	K29-0225-09	K29-0225-09	K29-0225-09	K29-0225-09	K29-0225-09	K29-0225-09	K29-0225-09	K29-0226-09	K29-0225-09	K29-0226-09	Button (D) (TONE)
–	–	–	K29-0220-04	K29-0220-04	K29-0220-04	K29-0220-04	K29-0220-04	K29-0171-14	K29-0220-04	K29-0171-14	Button (E) x 5
–	K29-0235-04	K29-0235-04	–	–	–	–	–	–	–	–	Button (F)

www.hifiengine.com

Ref. No.	USA (K)	Canada (P)	General export (M)	South Africa (S)	England (T)	Australia X	Europe (WG)	Europe (WB)	Scandinavia (LG)	Scandinavia (LB)	Description
–	L06-0036-09	L06-0036-09	L06-0037-09	L06-0037-09	L06-0037-09	L06-0037-09	L06-0037-09	L06-0037-09	L06-0037-09	L06-0037-09	Power transformer
–	N14-0096-04	N14-0096-04	N14-0096-04	N14-0096-04	N14-0096-04	N14-0096-04	N14-0096-04	N14-0054-14	N14-0096-04	N14-0054-14	Plastic nut
–	J19-0443-09	J19-0443-09	J19-0443-09	J19-0460-09	J19-0460-09	J19-0460-09	J19-0443-09	J19-0443-09	J19-0443-09	J19-0443-09	Cord stopper
S3	S40-2037-05	S40-2037-05	S40-2047-05	S40-2047-05	S40-2047-05	S40-2047-05	S40-2047-05	S40-2047-05	S40-2047-05	S40-2047-05	Power switch
–	–	–	S31-2001-05	S31-2001-05	S31-2001-05	S31-2001-05	S31-2001-05	S31-2001-05	–	–	Slide switch (Power voltage selector)
–	X00-1610-11	X00-1611-01	X00-1610-10	X00-1610-10	X00-1610-10	X00-1610-10	X00-1610-61	X00-1610-61	X00-1610-61	X00-1610-61	Power supply unit
F502	F05-5011-05	F05-5013-05	F05-5013-05	F05-5013-05	F05-5013-05	F05-5013-05	F05-5015-05	F05-5015-05	F05-5015-05	F05-5015-05	FUSE (0.5A)
F503	–	–	–	–	–	–	F05-2525-05	F05-2525-05	F05-2525-05	F05-2525-05	FUSE (2.5AT)
F501	F05-3021-05	F05-3022-05	–	–	–	–	–	–	–	–	FUSE (3A)
F503	F05-4021-05	F05-4022-05	F05-4022-05	F05-4022-05	F05-4022-05	F05-4022-05	–	–	–	–	FUSE (4A)
F501	–	–	–	–	–	–	F05-1622-05	F05-1622-05	F05-1622-05	F05-1622-05	FUSE (1.6AT)
F501	–	–	F05-1521-05	F05-1521-05	F05-1521-05	F05-1521-05	–	–	–	–	FUSE (1.5A)
–	J13-0034-05	J13-0034-05	J13-0034-05	J13-0034-05	J13-0034-05	J13-0034-05	J13-0027-05	J13-0027-05	J13-0027-05	J13-0027-05	FUSE Holder x 3
–	H01-1277-09	H01-1276-09	H01-1277-09	H01-1277-09	H01-1279-09	H01-1277-09	H01-1276-09	H01-1278-09	H01-1276-09	H01-1278-09	Carton case
–	–	H03-0388-09	–	–	H03-0390-09	–	H03-0388-09	H03-0389-09	H03-0388-09	H03-0389-09	Carton case

www.hifiengine.com

PARTS LIST

TOTAL

Ref. No.	Parts No.	Description	Remarks
CAPACITOR			
C601	CC45SL1H202M	Ceramic 0.002μF ±20%	
C602~604	CC45SL1H501M	Ceramic 500pF ±20%	
C605	CE04W1H222	Electrolytic 2200μF 50WV	
RESISTOR			
R601,602	PD14BY2E272K	Carbon 2.7KΩ ±10% ¼W	
R603,604	PD14BY2E333K	Carbon 33KΩ ±10% ¼W	
R605,606	PD14BY2E394K	Carbon 390KΩ ±10% ¼W	
R607,608	PD14BY2E104K	Carbon 100KΩ ±10% ¼W	
R609,610	PD14BY2H271K	Carbon 270Ω ±10% ½W	
POTENTIOMETER			
VR601	R06-5010-09	Potentiometer VOLUME 100KΩ (B) dual	
VR602	R01-5010-09	Potentiometer BALANCE 200KΩ (W)	
SWITCH			
S1	S01-3018-09	Rotary switch (INPUT)	
S2	S04-1024-05	Rotary switch (SPEAKER)	
S9	S40-4018-09	Push switch (TONE DEFEAT)	
MISCELLANEOUS			
—	A03-0141-09	Cabinet	
—	A10-0415-09	Main chassis	
—	A11-0058-09	Sub chassis	
—	A15-0036-09	Pushbutton switch fram	
—	B04-0053-09	Ventilator grille	
—	B07-0124-14	Ring x 2	
—	B08-3008-14	Indicator	
—	B30-0097-09	Pilot lamp (POWER ON.OFF)	
—	B42-0009-04	Passed sticker	
—	B52-0180-00	Schematic diagram	
—	E06-0501-05	Din socket	
—	E11-0002-05	Head phone jack	
—	E11-0004-15	Mic jack	
—	E13-0805-09	Pin jack (8P) x 2	
—	E21-0804-09	Terminal strips	
—	F01-0199-09	Heat sink	
—	F19-0188-09	Lamp mask	
—	H10-1198-09	Polystyrene foamed fixture x 2	
—	H25-0153-09	Polyethylene bag.	
—	H25-0155-09	Polyethylene bag.	
—	J02-0072-09	Leg x 4	
—	J21-1318-09	P.C.Board mounting hardware x 2	
—	J25-1158-09	Rotary switch sub P.C. Board	
—	J39-0036-09	Spacer (C) x 2	
—	J42-0062-09	Bushing	
—	X07-1360-10	Main amp. unit	
—	X08-1380-10	TONE amp. unit	
—	X13-2040-10	Switch unit	
—	X13-2050-10	Pre amp. unit	

POWER SUPPLY (X00-1610-01, 10, 11, 61)

Ref. No.	Parts No.	Description	Remarks
CAPACITOR			
C501	CE04W1V221	Electrolytic 220μF 35WV	
C502	CE04W1E221	Electrolytic 220μF 25WV	
C503	CE04W1V331	Electrolytic 330μF 35WV	
C504~507	CK45SL1H403M	Ceramic 0.04μF ±20%	
RESISTOR			
R501	RN14AY1A471K	Metal 470Ω ±10% 1W	
R502	PD14CY2E682K	Carbon 6.8KΩ ±10% ¼W	
R503	RN14AY1A561K	Metal 560Ω ±10% 1W	
SEMICONDUCTOR			
D501~504	V11-9991-05	Diode FS-3	
D505	V11-9989-05	Diode 1S-188FM	
MISCELLANEOUS			
—	E23-0076-09	Lead pin x 11	
—	J25-1184-09	PC board	

MAIN AMP (X07-1360-10)

Ref. No.	Parts No.	Description	Remarks
CAPACITOR			
C301,302	CE04W1H010	Electrolytic 1μF 50WV	
C303,304	CC45TH1H201K	Ceramic 200pF ±10%	
C305,306	CE04W1C220	Electrolytic 22μF 16WV	
C307,308	CE04W1H100	Electrolytic 10μF 50WV	
C309,310	CE04W1H4R7	Electrolytic 4.7μF 50WV	
C311,312	CC45TH1H201K	Ceramic 200pF ±10%	
C313,314	CC45TH1H101K	Ceramic 100pF ±10%	
C315,316	CE04W1E101	Electrolytic 100μF 25WV	
C317,318	CE04W1A221	Electrolytic 220μF 10WV	
C319,320	CE04W1V222	Electrolytic 2200μF 35WV	
C321,322	CQ93M1H224M	Mylar 0.22μF ±20%	
C323	CE04W1E221	Electrolytic 220μF 25WV	
C324	CE04W1H471	Electrolytic 470μF 50WV	
C325	CE04W1A470	Electrolytic 47μF 10WV	
RESISTOR			
R301 302	PD14CY2E472K	Carbon 4.7KΩ ±10% ¼W	
R303,304	PD14CY2E683K	Carbon 68KΩ ±10% ¼W	
R305,306	PD14CY2E824K	Carbon 820KΩ ±10% ¼W	
R307,308	PD14CY2E823K	Carbon 82KΩ ±10% ¼W	
R309,310	PD14CY2E103K	Carbon 10KΩ ±10% ¼W	
R311,312	PD14CY2E102K	Carbon 1KΩ ±10% ¼W	
R313,314	PD14CY2E470K	Carbon 47Ω ±10% ¼W	
R315,316	PD14CY2E393K	Carbon 39KΩ ±10% ¼W	
R317,318	PD14CY2E562K	Carbon 5.6KΩ ±10% ¼W	
R319,320	PD14CY2E103K	Carbon 10KΩ ±10% ¼W	
R321,322	PD14CY2E393K	Carbon 39KΩ ±10% ¼W	
R323,324	PD14CY2E471K	Carbon 470Ω ±10% ¼W	
R325,326	PD14CY2E102K	Carbon 1KΩ ±10% ¼W	
R327,328	PD14CY2H562K	Carbon 5.6KΩ ±10% ½W	
R329,330	PD14CY2E680K or 820K	Carbon 68Ω or 82Ω ±10% ¼W	
R331,332	PD14CY2H271K	Carbon 270Ω ±10% ½W	
R333,334	PD14CY2E010K	Carbon 1Ω ±10% ¼W	
R335,336	R92-0111-05	Cement 0.47Ω ±10% 3W	
R337,338	PD14CY2H271K	Carbon 270Ω ±10% ½W	
R339,340	R92-0111-05	Cement 0.47Ω ±10% 3W	
R341,342	RN14AY1A4R7K	Metal 4.7Ω ±10% 1W	
R343	PD14CY2E103K	Carbon 10KΩ ±10% ¼W	
R344	PD14CY2E681K	Carbon 680Ω ±10% ¼W	
R345	PD14CY2E273K	Carbon 27KΩ ±10% ¼W	

www.hifiengine.com

PARTS LIST

Ref. No.	Parts No.	Description	Re-marks
R346	PD14CY2E473K	Carbon 47KΩ ±10% ¼W	
R347	PD14CY2E562K	Carbon 5.6KΩ ±10% ¼W	
R348	PD14CY2E103K	Carbon 10KΩ ±10% ¼W	
R349	PD14CY2E224K	Carbon 220KΩ ±10% ¼W	
R350	PD14CY2E223K	Carbon 22KΩ ±10% ¼W	
R351	PD14CY2E183K	Carbon 18KΩ ±10% ¼W	
R352	PD14CY2H122K	Carbon 1.2KΩ ±10% ½W	
R353	PD14CY2H102K	Carbon 1KΩ ±10% ½W	
R354	PD14CY2E223K	Carbon 22KΩ ±10% ¼W	
SEMICONDUCTOR			
Q7,8	V03-0270-05	Transistor 2SC945(P)	
Q9,10	V03-0125-05	Transistor 2SC734(O)(Y)	
Q11	V03-9985-05	Transistor 2SC1166(O)(Y)	
Q12,13	V01-9992-05	Transistor 2SA661(O)(Y)	
Q14	V03-9985-05	Transistor 2SC1166(O)(Y)	
Q15~18	V03-0330-05	Transistor 2SC789(O)(Y)	
Q19,20	V03-0270-05	Transistor 2SC945(P)	
Q21	V03-0125-05	Transistor 2SC734(O)(Y)	
D301,302	V21-0012-05	Diode STV-3H	
D303,304	V11-0076-05	Diode 1S1555	
D305	V11-9989-05	Diode 1S188 FM.	
MISCELLANEOUS			
SFR301, 302	R12-5019-05	PC trimmer potentiometer 100KΩ (B)	
SFR303, 304	R12-1021-05	PC trimmer potentiometer 1KΩ (B)	
—	E23-0076-09	Lead pin x 8	
—	J25-1185-09	PC board	

TONE AMP (X08-1380-10)

Ref. No.	Parts No.	Description	Re-marks
CAPACITOR			
C201,202	CE04W1ER47	Electrolytic 0.47μF 25WV	
C203,204	CE04W1E4R7	Electrolytic 4.7μF 25WV	
C205,206	CQ93M1H223K	Mylar 0.022μF ±10%	
C207,208	CQ93M1H392K	Mylar 0.0039μF ±10%	
C209,210	CQ93M1H823K	Mylar 0.082μF ±10%	
C211,212	CQ93M1H223K	Mylar 0.022μF ±10%	
C213	CE04W1E221	Electrolytic 220μF 25WV	
RESISTOR			
R201,202	PD14CY2E472K	Carbon 4.7KΩ ±10% ¼W	
R203,204	PD14CY2E823K	Carbon 82KΩ ±10% ¼W	
R205,206	PD14CY2E105K	Carbon 1MΩ ±10% ¼W	
R207,208	PD14CY2E271K	Carbon 270Ω ±10% ¼W	
R209,210	PD14CY2E822K	Carbon 8.2KΩ ±10% ¼W	
R211,212	PD14CY2E472K	Carbon 4.7KΩ ±10% ¼W	
R213,214	PD14CY2E152K	Carbon 1.5KΩ ±10% ¼W	
R215,216	PD14CY2E123K	Carbon 12KΩ ±10% ¼W	
R217,218	PD14CY2E272K	Carbon 2.7KΩ ±10% ¼W	
R219~222	PD14CY2E682K	Carbon 6.8KΩ ±10% ¼W	
R223	PD14CY2E221K	Carbon 220Ω ±10% ¼W	
R224	PD14CY2H102K	Carbon 1KΩ ±10% ½W	
SEMICONDUCTOR			
Q5,6	T03-9722-05	Transistor 2SC900	
MISCELLANEOUS			
VR201,202	R06-4022-09	Potentiometer (TONE)	
—	E23-0076-09	LEAD PIN x 15	
—	J25-1188-09	P.C. Board	

SWITCH (X13-2040-10)

Ref. No.	Parts No.	Description	Re-marks
CAPACITOR			
C401,402	CQ93M1H393K	Mylar 0.039μF ±10%	
C403,404	CK45SL1H681K	Ceramic 680pF ±10%	
C405,406	CQ93M1H472K	Mylar 0.0047μF ±10%	
RESISTOR			
R401,402	PD14CY2E472K	Carbon 4.7KΩ ±10% ¼W	
R403,404	PD14CY2E822K	Carbon 8.2KΩ ±10% ¼W	
R405,406	PD14CY2E182K	Carbon 1.8KΩ ±10% ¼W	
SWITCH			
S4~8	S40-5002-09	Pushbutton switch	
MISCELLANEOUS			
—	E23-0076-09	Lead pin x 21	
—	J25-1186-09	PC board	

PREAMP (X13-2050-10)

Ref. No.	Parts No.	Description	Re-marks
CAPACITOR			
C101,102	CC45SL1H102M	Ceramic 0.001μF ±20%	
C103,104	CQ93M1H153K	Mylar 0.015μF ±10%	
C105,106	CQ93M1H472K	Mylar 0.0047μF ±10%	
C107,108	CE04W1E010	Electrolytic 1μF 25WV	
C109,110	CC45SL1H501M	Ceramic 500pF ±20%	
C111,112	CC45SL1H100M	Ceramic 10pF ±20%	
C113,114	CC45SL1H300M	Ceramic 30pF ±20%	
C115,116	CC45SL1H101M	Ceramic 100pF ±20%	
C117,118	CE04W1C100	Electrolytic 10μF 16WV	
C119,120	CE04W1E010	Electrolytic 1μF 25WV	
C121,122	CE04WIC220	Electrolytic 22μF 16WV	
C123	CE04W1E470	Electrolytic 47μF 25WV	
C124	CE04W1E331	Electrolytic 330μF 25WV	
RESISTOR			
R101,102	PD14CY2E223K	Carbon 22KΩ ±10% ¼W	
R103,104	PD14CY2E224K	Carbon 220KΩ ±10% ¼W	
R105,106	PD14CY2E153K	Carbon 15KΩ ±10% ¼W	
R107,108	PD14CY2E332K	Carbon 3.3KΩ ±10% ¼W	
R109,110	PD14CY2E563K	Carbon 56KΩ ±10% ¼W	
R111,112	PD14CY2E331K	Carbon 330Ω ±10% ¼W	
R113,114	PD14CY2E683K	Carbon 68KΩ ±10% ¼W	
R115,116	PD14CY2E184K	Carbon 180KΩ ±10% ¼W	
R117,118	PD14CY2E564K	Carbon 560KΩ ±10% ¼W	
R119,120	PD14CY2E561K	Carbon 560Ω ±10% ¼W	
R121,122	PD14CY2E123K	Carbon 12KΩ ±10% ¼W	
R123,124	PD14CY2E563K	Carbon 56KΩ ±10% ¼W	
R125	PD14CY2E333K	Carbon 33KΩ ±10% ¼W	
R126	PD14CY2E122K	Carbon 1.2KΩ ±10% ¼W	
SEMICONDUCTOR			
Q1~4	V03-9722-05	Transistor 2SC900	
MISCELLANEOUS			
—	E23-0076-09	Lead pin x 11	
—	J25-1187-09	PC board	

www.hifiengine.com

PC BOARD

POWER SUPPLY (X00-1610-01, 10, 11, 61)

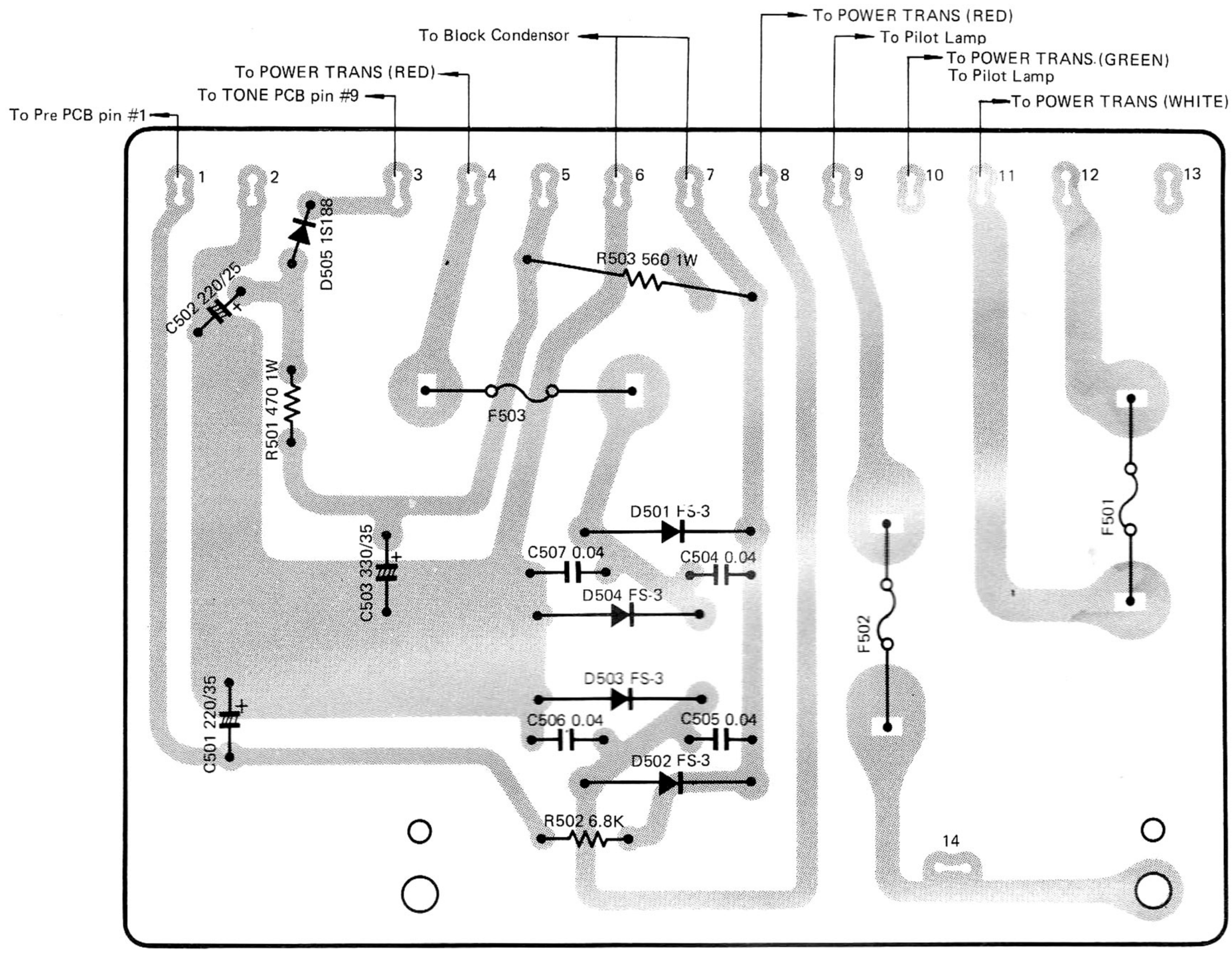

MAIN AMP (X07-1360-10)

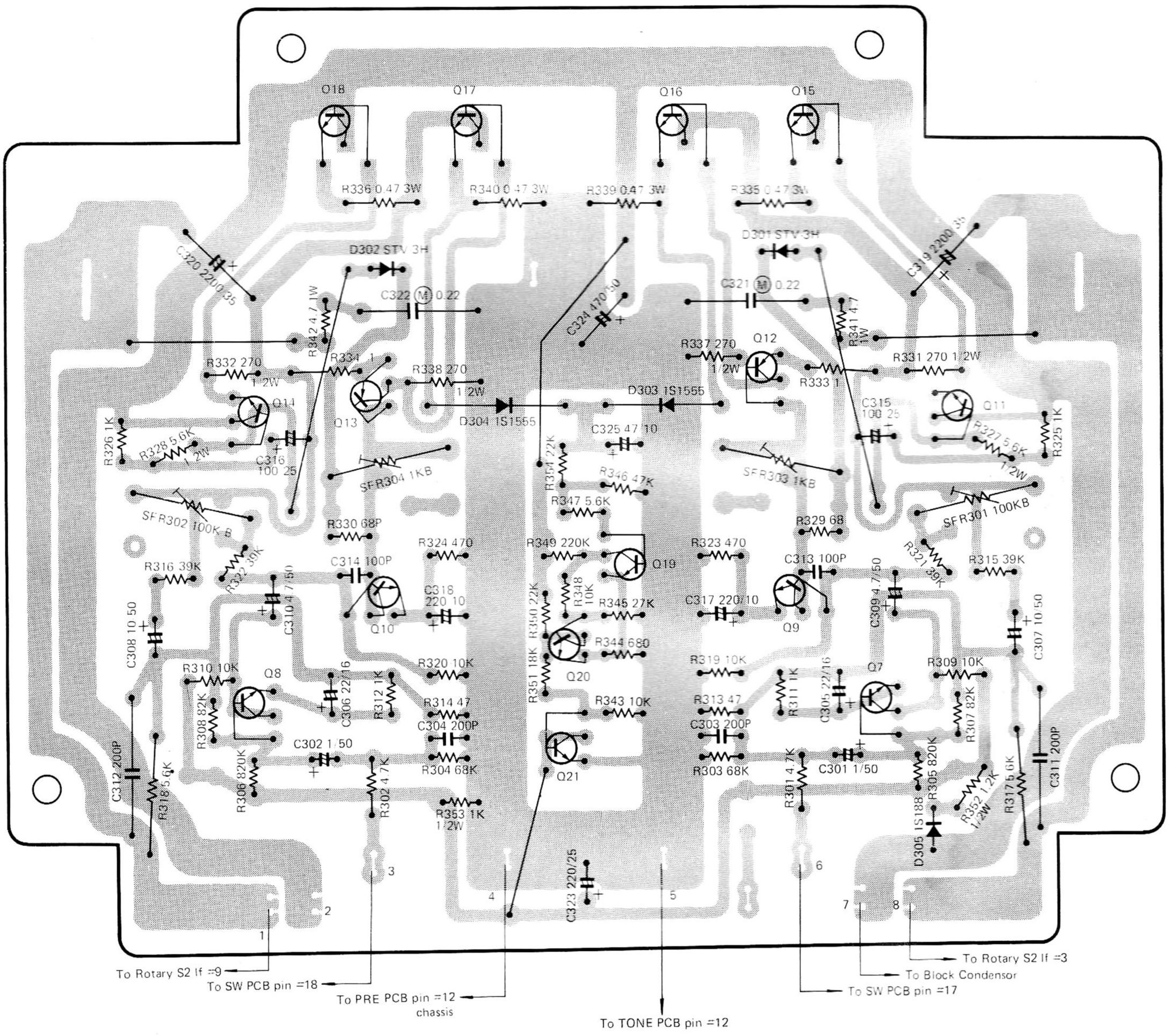

PC BOARD

TONE AMP (X08-1380-10)

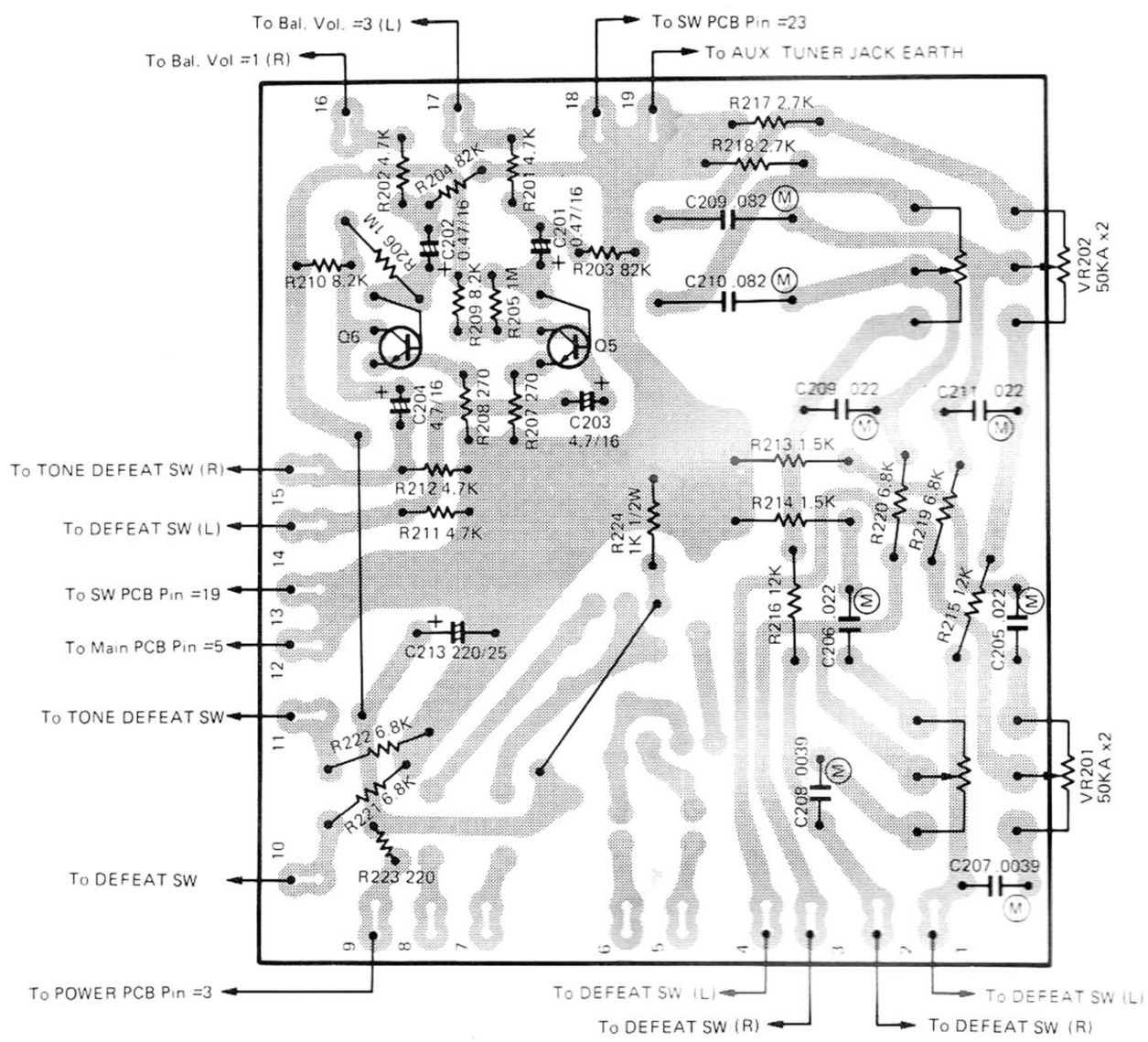

SWITCH (X13-2040-10)

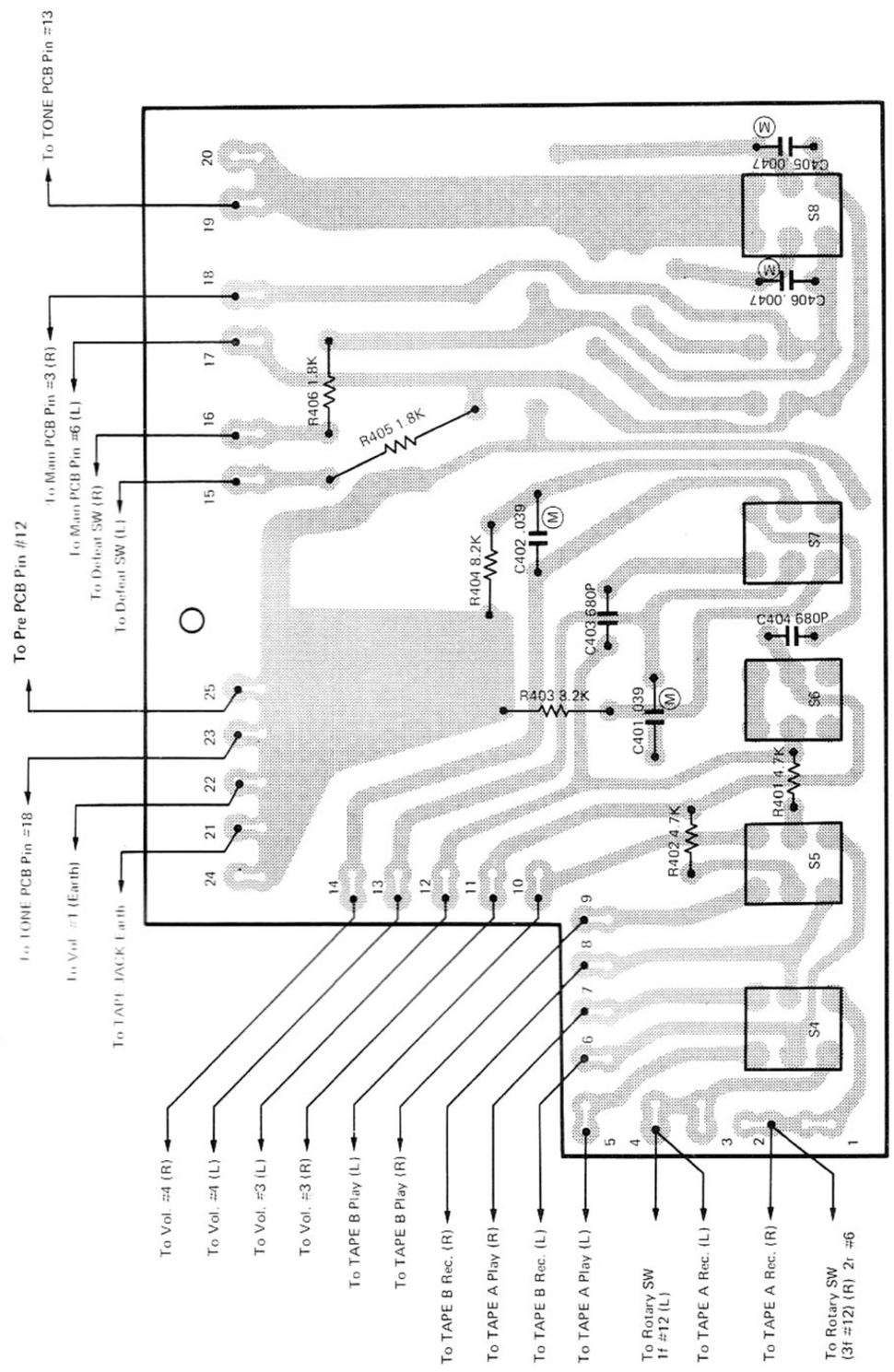

PRE AMP (X13-2050-10)

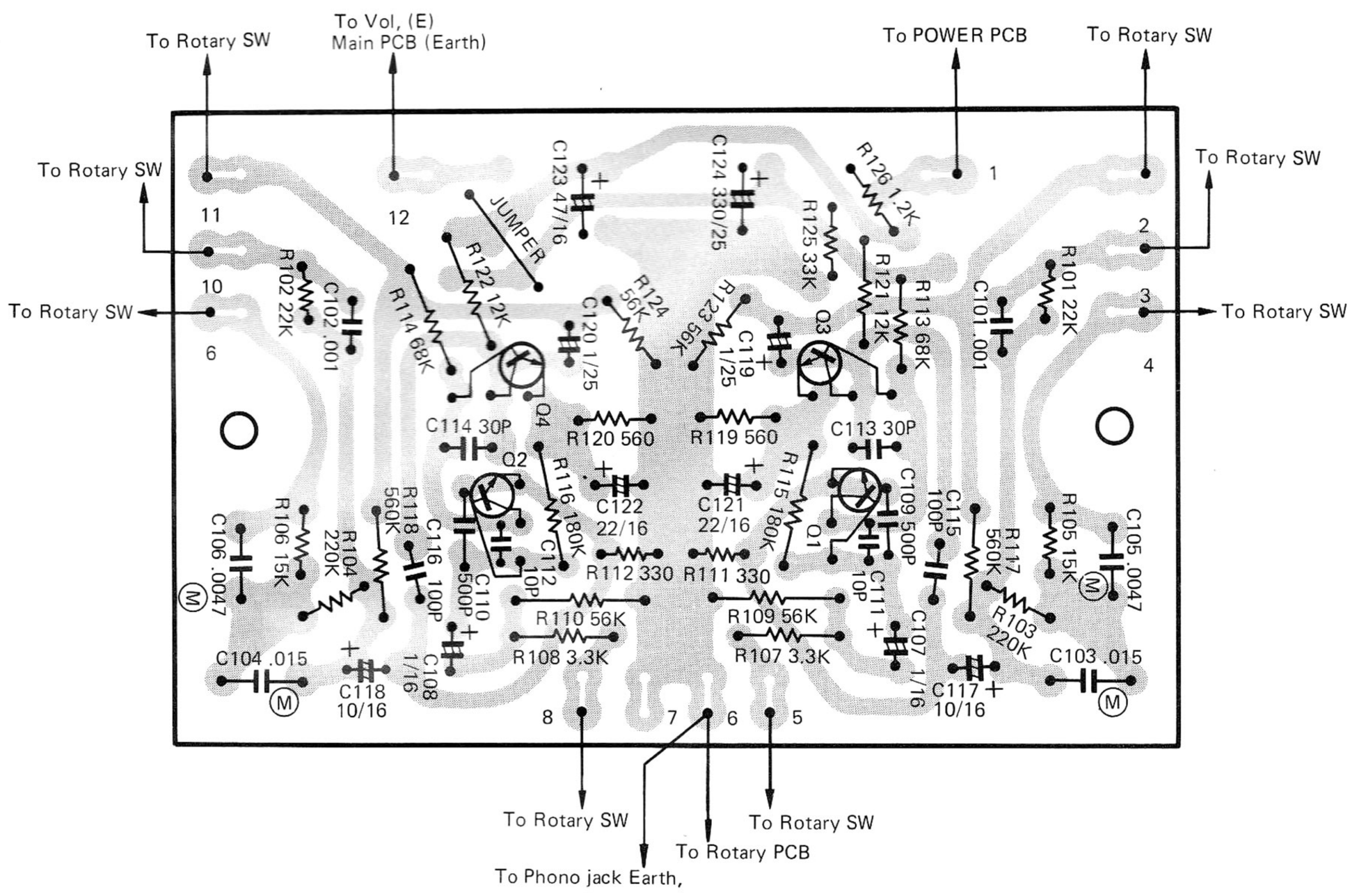

TROUBLESHOOTING/SEMICONDUCTOR SUBSTITUTIONS

TROUBLESHOOTING

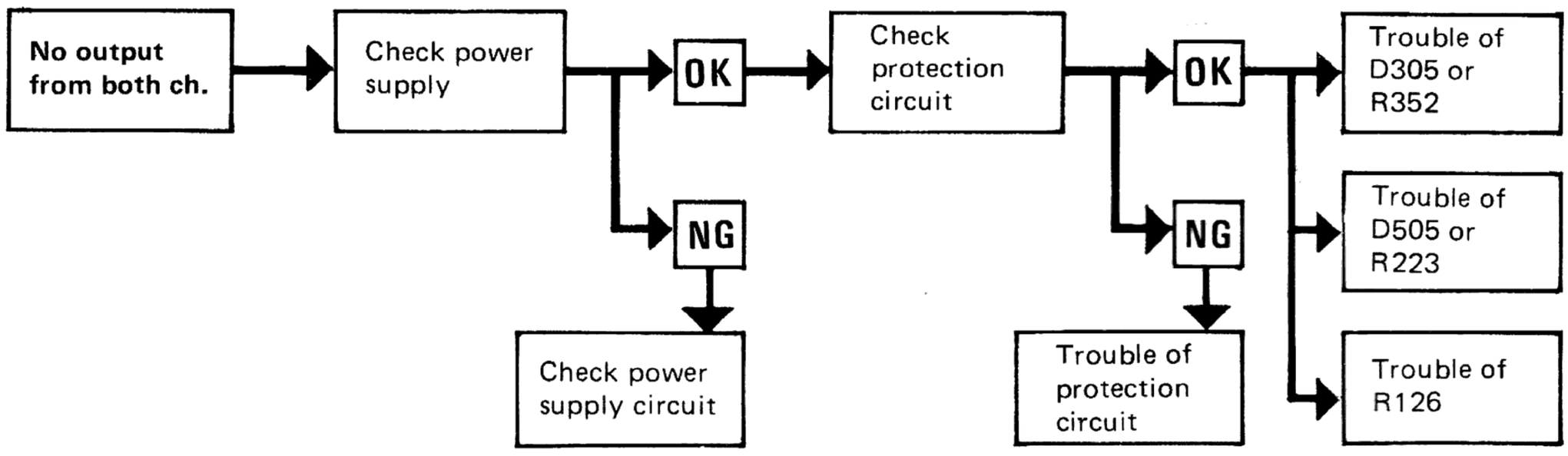

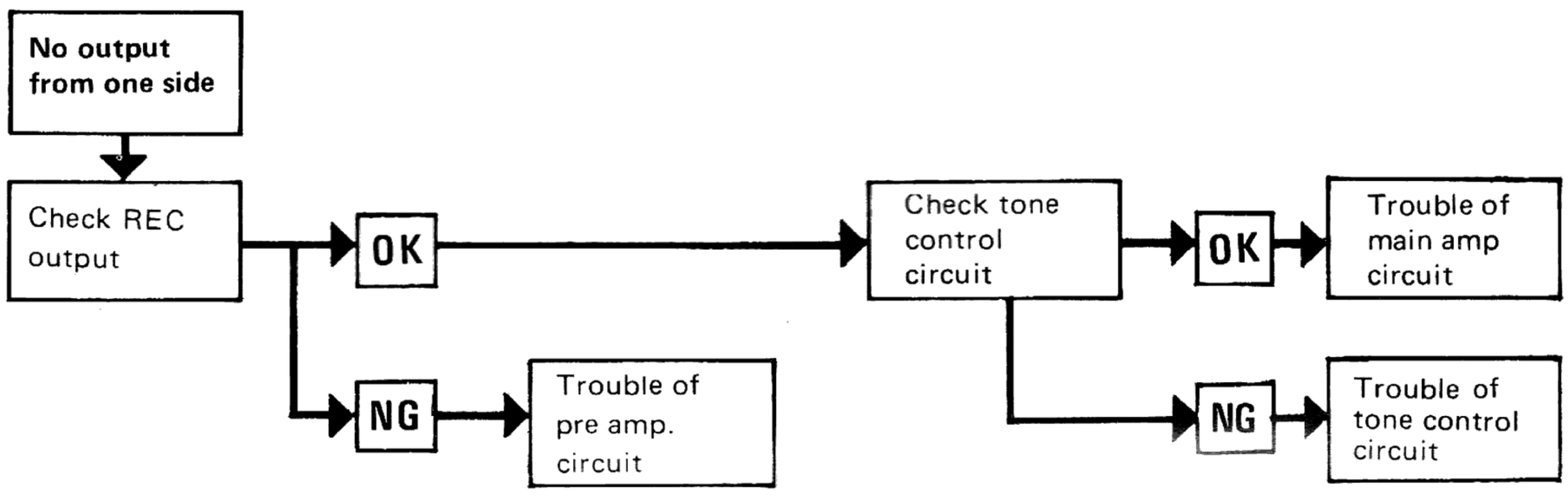

SEMICONDUCTOR SUBSTITUTIONS

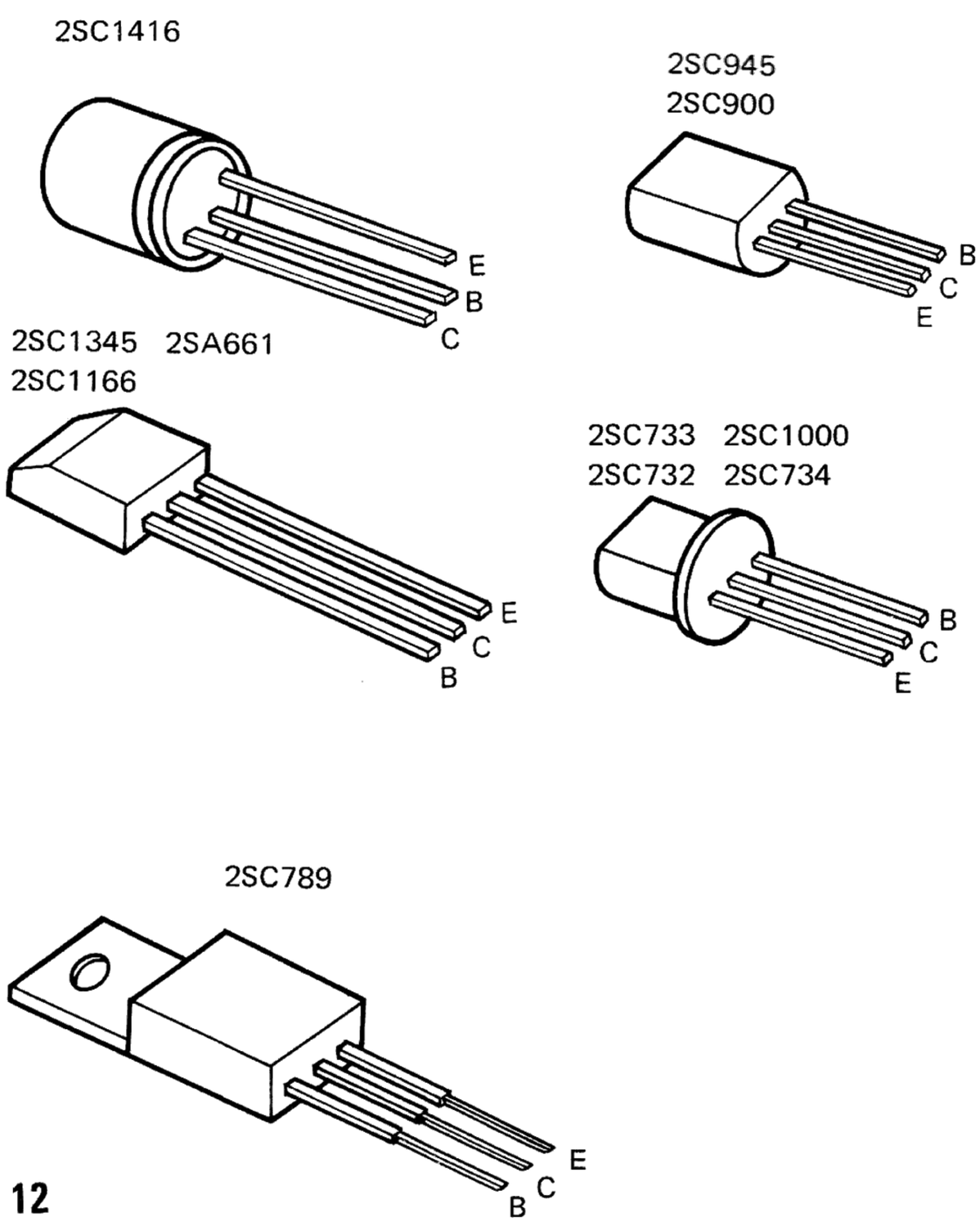

SEMICONDUCTOR NAME	SUBSTITUTIONS
PRE AMP	
2SC900	2SC732 2SC1000 2SC1345 2SC1416A (GR)
TONE AMP	
2SC900	2SC732 2SC733 2SC1000 2SC1345 2SC1416A (GR)
MAIN AMP	
2SA661 (O) or (Y)	2SA673A 2SA743A 2SA565
2SC734 (O) or (Y)	2SC1212A 2SC1213A
2SC789 (O) or (Y)	2SC1061
2SC945 (P)	2SC733 2SC1000 2SC1416A (GR) 2SC1345
2SC1166 (O) or (Y)	2SC1213A 2SC984

www.hifiengine.com

SCHEMATIC DIAGRAM

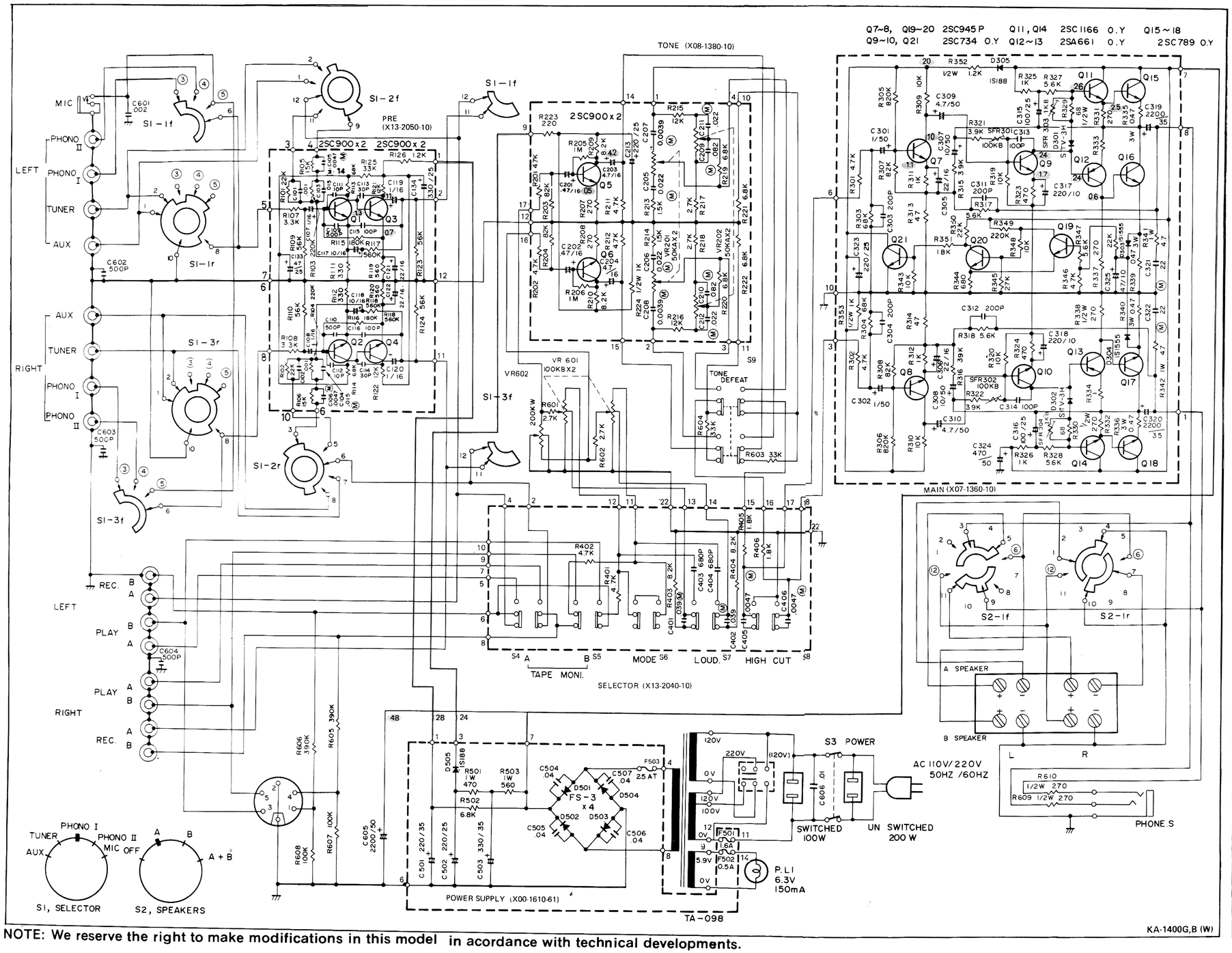

REVISED CIRCUITS

For the sets sold in Scandinavian countries.

L TYPE

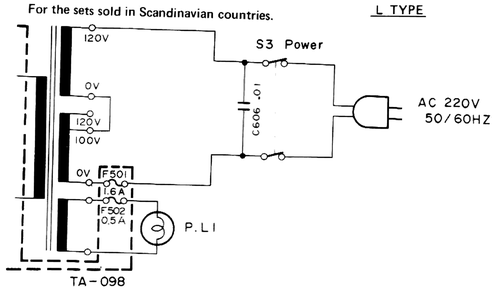

For the sets sold in Australia, England, South Africa, U. S. Military Bases and Other countries.

U,T,M,X,S TYPE

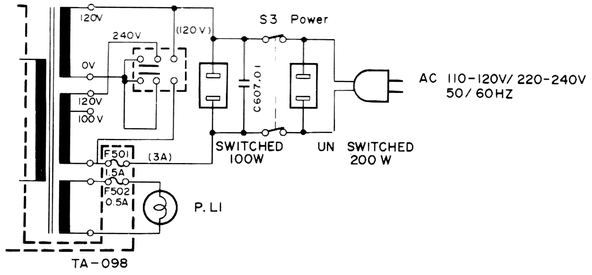

For the sets sold in America and Canada.

K,P TYPE

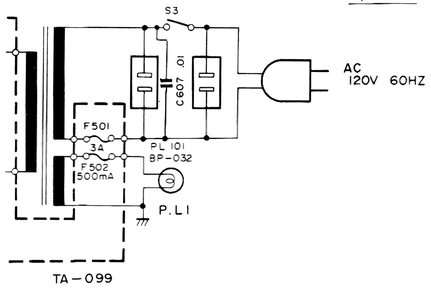

NOTE: We reserve the right to make modifications in this model in acordance with technical developments.

SPECIFICATIONS

RMS Power Output		
Both channels driven	:	15 watts x 2 into 8 ohms at 50 Hz–20,000 Hz
	:	17 watts x 2 into 8 ohms at 1,000 Hz
	:	20 watts x 2 into 4 ohms at 1,000 Hz
Dynamic Power Output	:	54 watts into 8 ohms
	:	68 watts into 4 ohms
Total Harmonic Distortion	:	0.8% at rated power into 8 ohms
	:	0.1% at ½ rated power into 8 ohms at 1,000 Hz
Inter Modulation Distortion	:	0.8% at rated power into 8 ohms
(60 Hz:7 KHz=4:1)	:	0.1% at ½ rated power into 8 ohms
Power Bandwidth	:	20 Hz–40,000 Hz
Signal to Noise Ratio at 50 mW	:	50 dB
Damping Factor	:	30 at 8 ohms
Speaker Impedance	:	Accept 4 ohms to 16 ohms

PRE-AMPLIFIER SECTION

Input Sensitivity and Impedance		
Phono 1	:	2.5 mV, 50 K ohms
Phono 2	:	2.5 mV, 50 K ohms
Tuner	:	150 mV, 50 K ohms
AUX	:	150 mV, 50 K ohms
Tape Play A, B	:	150 mV, 50 K ohms
Mic	:	3.0 mV, 50 K ohms
Maximum Input Voltage		
Phono 1, 2	:	80 mV, T.H.D. 0.8% at 1,000 Hz
Signal to Noise Ratio (I.H.F. A CURVE)		
Phono 1, 2	:	68 dB
Tuner	:	80 dB
AUX	:	80 dB
Tape Play A, B	:	80 dB
Mic	:	68 dB
Output Voltage and Impedance		
Tape Rec. A. B (pin)	:	150 mV, 110 ohms
(Din connector)	:	30 mV, 80 K ohms
Frequency Response		
Phono 1, 2	:	RIAA Standard curve ±1.0 dB
Tuner, AUX, Tape Play	:	20 Hz–40,000 Hz +0, –2 dB
Tone Controls		
Bass	:	±10 dB at 100 Hz
Treble	:	±10 dB at 10,000 Hz
Loudness Control (–30 dB)	:	+8 dB at 100 Hz
	:	+5 dB at 10,000 Hz
High Filter 10,000 Hz	:	–8 dB

GENERAL

Switches		
Speaker Selector	:	OFF, A, B, A+B
Input Selector	:	AUX, TUNER, PHONO1, PHONO2, MIC
Mode	:	STEREO, MONO
Tape Monitor	:	A, B
Others	:	HIGH FILTER, LOUDNESS, TONE DEFEAT
AC Outlet	:	Switched 1, Unswitched 1
Power Consumption	:	135 watts at full power
	:	10 watts at no signal
Dimensions	:	W 14-5/8" (372 mm), H 4-15/16" (125 mm), D 9-7/8" (251.5 mm)
Weight	:	11.6 Lbs (5.3 Kg)

We reserve the right to make modifications in this model in accordance with technical developments.

www.hifiengine.com

KENWOOD ELECTRONICS, INC.

- 15777 SOUTH BROADWAY, GARDENA, CALIFORNIA 90248 U.S.A.
- 72-02 51ST AVENUE, WOODSIDE. N.Y. 11377 U.S.A.

TRIO-KENWOOD ELECTRONICS, N.V.

- HARENSESTEENWEG, 484. 1800 VILVOORDE,BELGIUM.

TRIO-KENWOOD ELECTRONICS, GmbH.

- 6056 HEUSENSTAMM, AM GOLDBERG 5, WEST GERMANY.

TRIO ELECTRONICS, INC.

- 3-6-17 AOBADAI, MEGURO-KU, TOKYO, JAPAN.

© 1974-11 PRINTED IN JAPAN B51-0323-00 (GD) 3300

www.hifiengine.com