KENWOOD

STEREO INTEGRATED AMPLIFIER

KA-4006

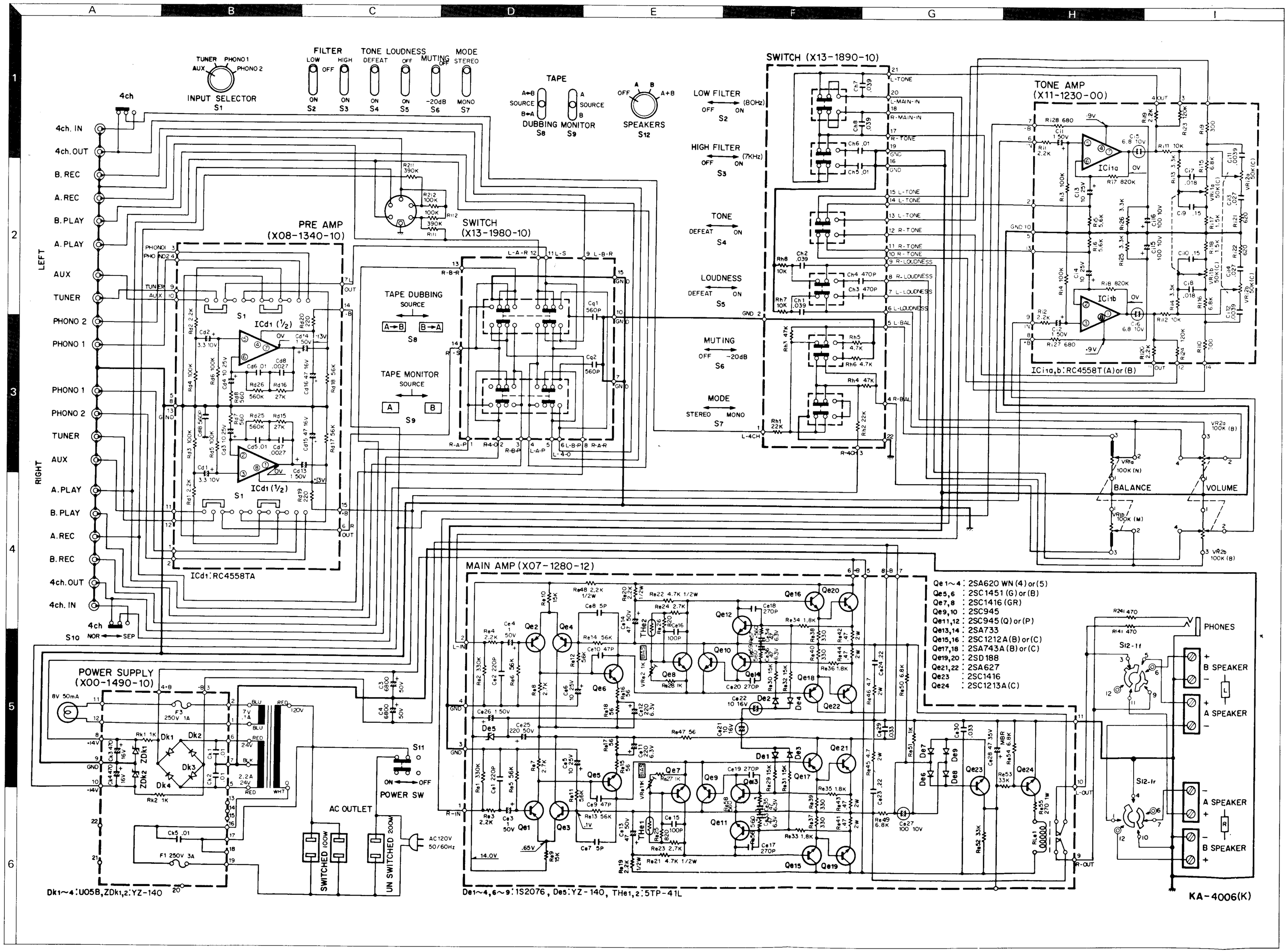

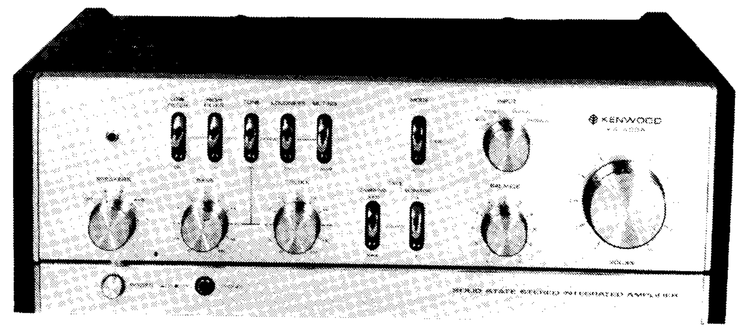

SPECIFICATIONS

RMS Power Output		
Both channel driven	34 x 2 watts into 8 ohms at 20 Hz – 20,000 Hz	
	35 x 2 watts into 8 ohms at 1,000 Hz	
	48 x 2 watts into 4 ohms at 1,000 Hz	
Each channel driven	40 x 2 watts into 8 ohms at 1,000 Hz	
	56 x 2 watts into 4 ohms at 1,000 Hz	
Dynamic Power Output	95 watts into 8 ohms	
	145 watts into 4 ohms	
Total Harmonic Distortion	0.5% at rated power into 8 ohms	
	0.05% at 1/2 rated power into 8 ohms at 1,000 Hz	
Inter Modulation Distortion	0.5% at rated power into 8 ohms	
(60 Hz : 7 kHz = 4 : 1)	0.08% at 1/2 rated power into 8 ohms	
Power Bandwidth	8 Hz – 45 kHz	
Signal to Noise Ratio	110 dB (Short circuited)	
Damping Factor	32 at 8 ohms	
Speaker Impedance	Accept 4 ohms to 16 ohms	

PRE-AMPLIFIER SECTION

Input Sensitivity and Impedance		
Phono 1	2.5mV	50 K ohms
Phono 2	2.5mV	50 K ohms
Tuner	150mV	50 K ohms
AUX	150 mV	50 K ohms
Tape Play A, B, 4 CH IN	150 mV	50 K ohms
Maximum Input Voltage (rms)		
Phono 1, 2	140mV T.H.D. 0.5% at 1,000 Hz	
Signal to Noise Ratio (IHF A CURVE)		
Phono 1, 2	76 dB	
Tuner	90 dB	
AUX	90 dB	
Tape Play A, B, 4 CH IN	90 dB	
Output Voltage and Impedance		
Tape Rec. A, B (Pin)	150mV	50 ohms
(Din connector)	40 mV	70 K ohms
4 CH OUT	150mV	50 ohms
Frequency Response		
Phono 1, 2	RIAA Standard curve	±0.3 dB
Tuner, AUX, Tape Play	10 Hz 40 kHz $^{+0}_{-1.5}$dB	
Tone Controls		
Bass	±10 dB at 100 Hz	
Treble	±10 dB at 10,000 Hz	
Loudness Control (–30 dB)	+8 dB at 100 Hz	
	+3 dB at 10,000 Hz	
Low Filter 80 Hz	6 dB/ oct	
High Filter 7 kHz	6 dB/ oct	

GENERAL

Switches	
Speaker Selector	OFF – A, B, A + B
Input Selector	Phono 1, 2, Tuner Aux.
Mode	Stereo – Mono
Function	Muting, Tone Defeat, Low & Hi Filter, Loud.
Tape Monitor	A, B, Tape Dubbing A → B B → A
Others	Phones jack
AC Outlet	Switched 2, Unswitched 1
Power Consumption	140 watts at full power
Dimensions	W 17-1/8" (435mm), H 6-3/16" (157mm), D 12" (306mm)
Weight	24.2 lbs (11 kg)

Main amp units of KR-5400, KR-4400 and KA-4006 are revised for using New DC Voltage Protection Circuit. KR-5400's is revised from (X07-1280-10) to (X07-1350-10), KR-4400's from (X07-1280-11) to (X07-1350-11) and KA-4006's from (X07-1280-12) to (X07-1350-12). Refer to SERVICE BULLETIN NO. SB-059 about circuit description. As to specifications, no amendment is needed.

MAIN AMP (X07-1350-10)

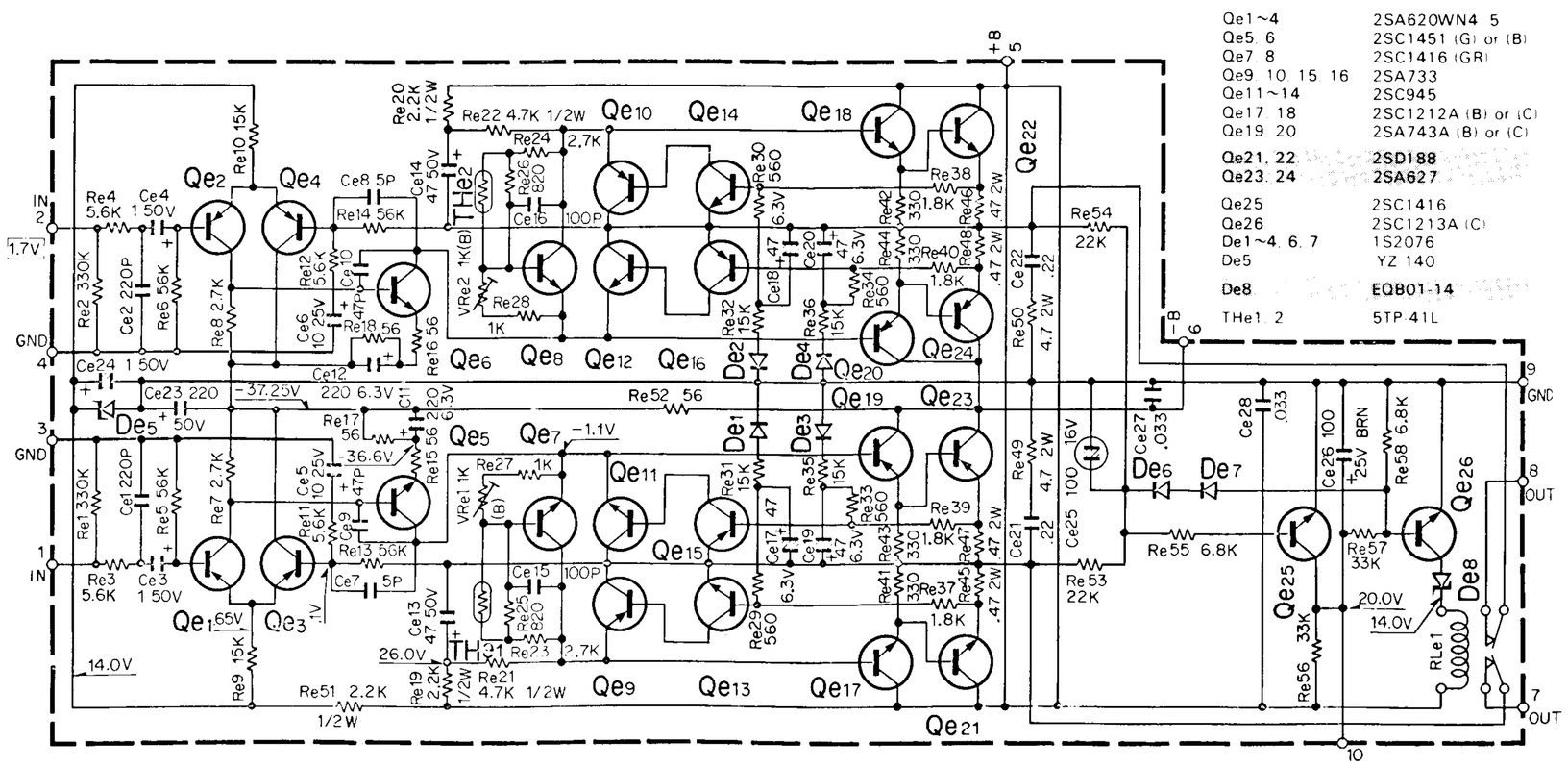

The schematic diagram shown above is KR-5400 main amp unit (X07-1350-10). KR-4400 is modified from (X07-1350-10) to (X07-1350-11) and KA-4006's from (X07-1350-10) to (X07-1350-12). Modification points are marked on the schematic diagram with black screen and showed in the parts list.

■ PARTS LIST

Ref No	Parts No	Description				Remarks
		CAPACITOR				
Ce1, 2	CC45SL1H221K	Ceramic	220pF	±10%		
Ce3, 4	CE04W1H010	Electrolytic	1μF		50WV	
Ce5, 6	CE04W1E100	Electrolytic	10μF		25WV	
Ce7, 8	CC45SL1H050D	Ceramic	5pF	±0.5pF		
Ce9, 10	CC45SL1H470K	Ceramic	47pF	±10%		
Ce11, 12	CE04W0J221	Electrolytic	220μF		6.3WV	
Ce13, 14	CE04W1H470	Electrolytic	47μF		50WV	
Ce15, 16	CC45SL1H101K	Ceramic	100pF	±10%		
Ce17~20	CE04W0J470	Electrolytic	47μF		6.3WV	
Ce21, 22	CQ93M1H224M	Mylar	0.22μF	±20%		
Ce23	CE04W1H221	Electrolytic	220μF		50WV	
Ce24	CE04W1H010	Electrolytic	1μF		50WV	
Ce25	CE04W1C101 (NP)	Non-pole Electrolytic	100μF		16WV	
Ce26	CE04W1E101M-BR	Electrolytic	100μF		25WV	
Ce27	CQ93M1H333M	Mylar	0.033μF	±20%		
Ce28	CQ93M1H333M	Mylar	0.033μF	±20%		10, 11
	CQ93M1H104M	Mylar	0.1μF	±20%		12
		RESISTOR				
Re1, 2	PD14CY2E334J	Carbon	330kΩ	±5%	1/4W	
Re3, 4	PD14CY2E562J	Carbon	5.6kΩ	±5%	1/4W	10, 11
	PD14CY2E222J	Carbon	2.2kΩ	±5%	1/4W	12
Re5, 6	PD14CY2E563J	Carbon	56kΩ	±5%	1/4W	
Re7, 8	PD14CY2E272J	Carbon	2.7kΩ	±5%	1/4W	
Re9	PD14CY2E153J	Carbon	15kΩ	±5%	1/4W	
Re10	PD14BY2E153J	Carbon	15kΩ	±5%	1/4W	
Re11, 12	PD14CY2E562J	Carbon	5.6kΩ	±5%	1/4W	
Re13	PD14BY2E563J	Carbon	56kΩ	±5%	1/4W	
Re14	PD14CY2E563J	Carbon	56kΩ	±5%	1/4W	
Re15~18	PD14CY2E560J	Carbon	56Ω	±5%	1/4W	
Re19, 20	RC05GF2H222K	Carbon	2.2kΩ	±10%	1/2W	
Re21, 22	RC05GF2H472K	Carbon	4.7kΩ	±10%	1/2W	
Re23, 24	PD14CY2E272J	Carbon	2.7kΩ	±5%	1/4W	
Re25, 26	PD14BY2E821J	Carbon	820Ω	±5%	1/4W	
Re27	PD14CY2E102J	Carbon	1kΩ	±5%	1/4W	
Re28	PD14BY2E102J	Carbon	1kΩ	±5%	1/4W	
Re29, 30	PD14CY2E561J	Carbon	560Ω	±5%	1/4W	10, 12
	PD14CY2E681J	Carbon	680Ω	±5%	1/4W	11
Re31	PD14BY2E153J	Carbon	15kΩ	±5%	1/4W	
Re32	PD14CY2E153J	Carbon	15kΩ	±5%	1/4W	
Re33, 34	PD14BY2E561J	Carbon	560Ω	±5%	1/4W	10, 12
	PD14BY2E681J	Carbon	680Ω	±5%	1/4W	11
Re35, 36	PD14CY2E153J	Carbon	15kΩ	±5%	1/4W	
Re37~40	PD14BY2E182J	Carbon	1.8kΩ	±5%	1/4W	
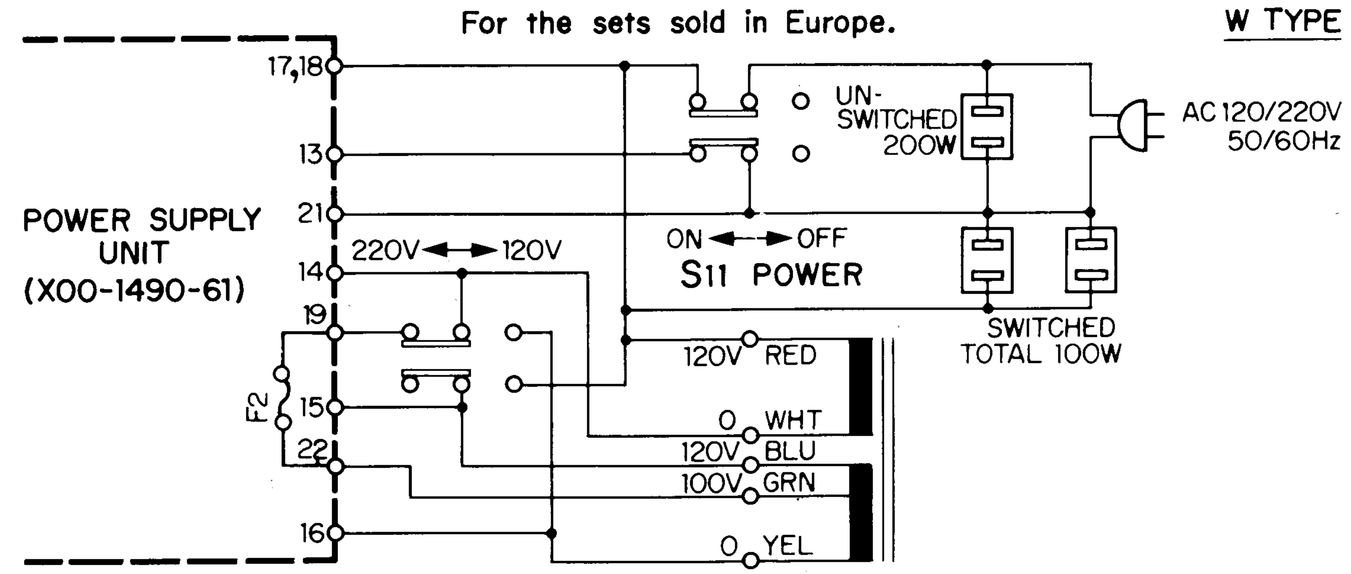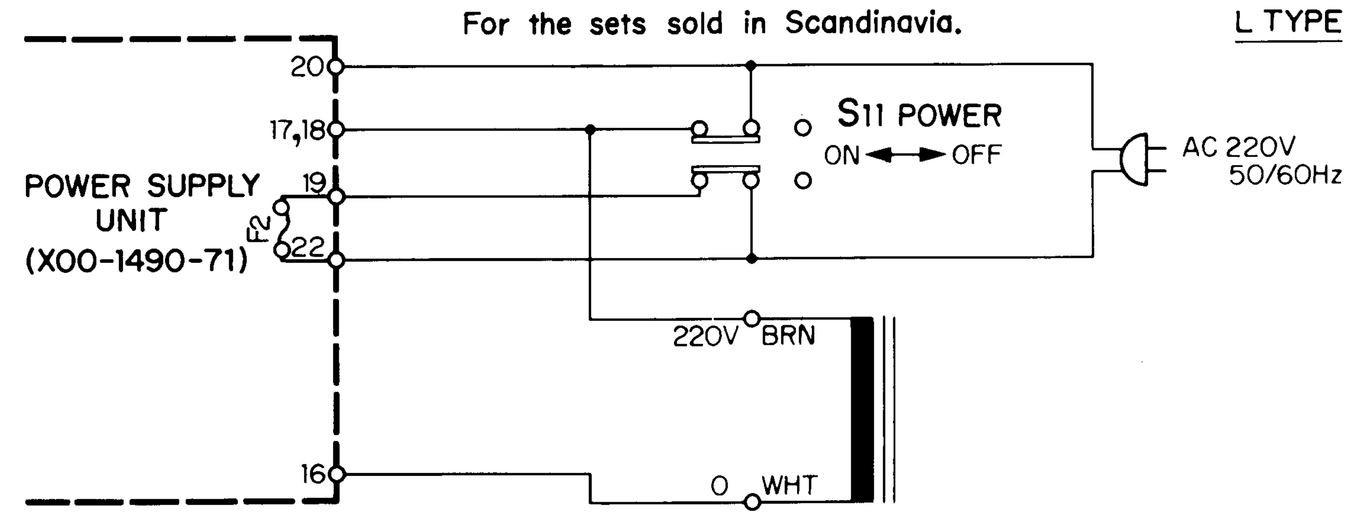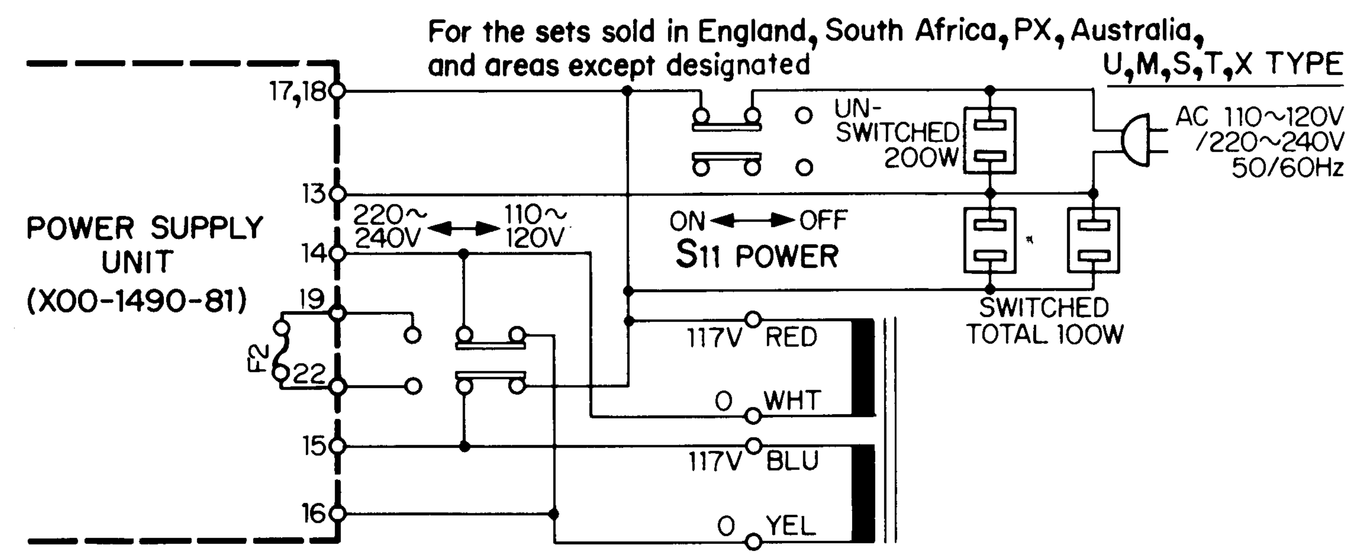
Ref No	Parts No	Description				Remarks
		RESISTOR				
Re41~44	PD14BY2E331J-B	Carbon	330Ω	±5%	1/4W	
Re45~48	RN14AB3-DR47K-B	Metal film	0.47Ω	±10%	2W	
Re49, 50	RN14AB3-D4R7K-B	Metal film	4.7Ω	±10%	2W	
Re51	RC05GF2H222K	Carbon	2.2kΩ	±10%	1/2W	
Re52	PD14BY2E560J-B	Carbon	56Ω	±5%	1/4W	
Re53, 54	PD14BY2E223J	Carbon	22kΩ	±5%	1/4W	
Re55	PD14CY2E682J	Carbon	6.8kΩ	±5%	1/4W	
Re56, 57	PD14CY2E333J	Carbon	33kΩ	±5%	1/4W	
Re58	PD14CY2E682J	Carbon	6.8kΩ	±5%	1/4W	
		SEMICONDUCTOR				
Qe1~4	V01-0127-05	Transistor 2SA620WN4 or 5				
Qe5, 6	V03-0360-05	Transistor 2SC1451 (G) or (B)				
Qe7, 8	V03-0358-05	Transistor 2SC1416 (GR)				
Qe9, 10	V01-0084-05	Transistor 2SA733				
Qe11~14	V03-0270-05	Transistor 2SC945				
Qe15, 16	V01-0084-05	Transistor 2SA733				
Qe17, 18	V03-0235-05	Transistor 2SC1212A (B) or (C)				
Qe19, 20	V01-0119-05	Transistor 2SA743A (B) or (C)				
Qe21, 22	V04-0037-05	Transistor 2SD188				10, 12
	V03-0321-05	Transistor 2SC1444				11
Qe23, 24	V01-0062-05	Transistor 2SA627				10, 12
	V01-0098-05	Transistor 2SA764				11
Qe25	V03-0358-05	Transistor 2SC1416				
Qe26	V03-0235-05	Transistor 2SC1213A (C)				
De1~4	V11-0273-05	Diode 1S2076				
De5	V11-0254-05	Zener diode YZ-140				
De6, 7	V11-0273-05	Diode 1S2076				
De8	V11-0354-05	Diode EQB01-14				10
		Diode EQB01-08				11
		Diode EQB01-11				12
THe1, 2	V22-0027-05	Thermistor 5TP-41L				
		MISCELLANEOUS				
VRe1, 2	R12-1012-05	PC trimmer potentiometer 1kΩ (B)				
RLe1	S51-4029-05	Relay				
–	E02-0209-05	Transistor socket × 4				
–	F01-0107-23	Relay				
–	F20-0066-05	Mica plate × 4