KENWOOD

HI/FI STEREO COMPONENTS

SERVICE MANUAL

KA-80

An item of adjustment is written in three languages — English, French and German.

Un article sur réglages est écrit en trois langues, Anglais, Français et Allemand.

Ein Artikel der Abgleich wird auf drei Sprachen, Englische, Französisch und Deutsch geschrieben.

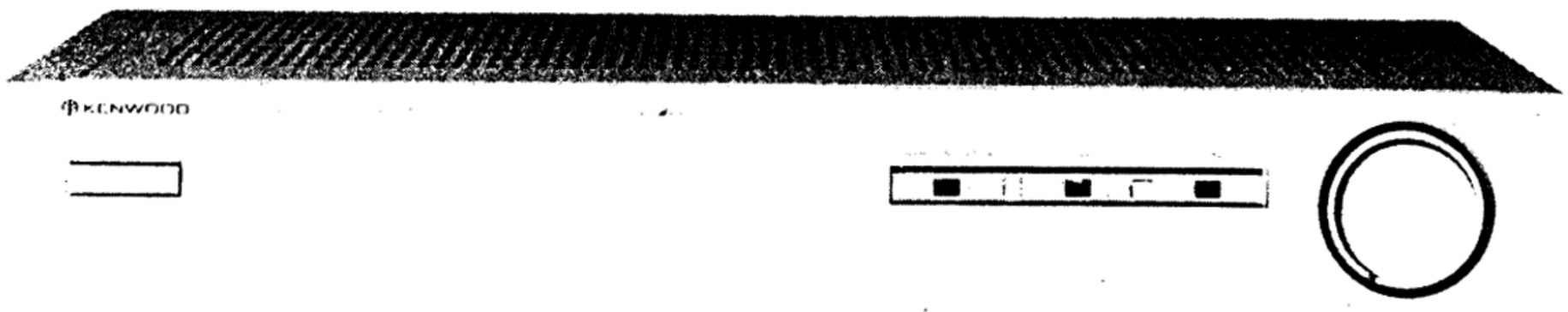

HIGH SPEED DC STEREO INTEGRATED AMPLIFIER

EXTERNAL VIEW

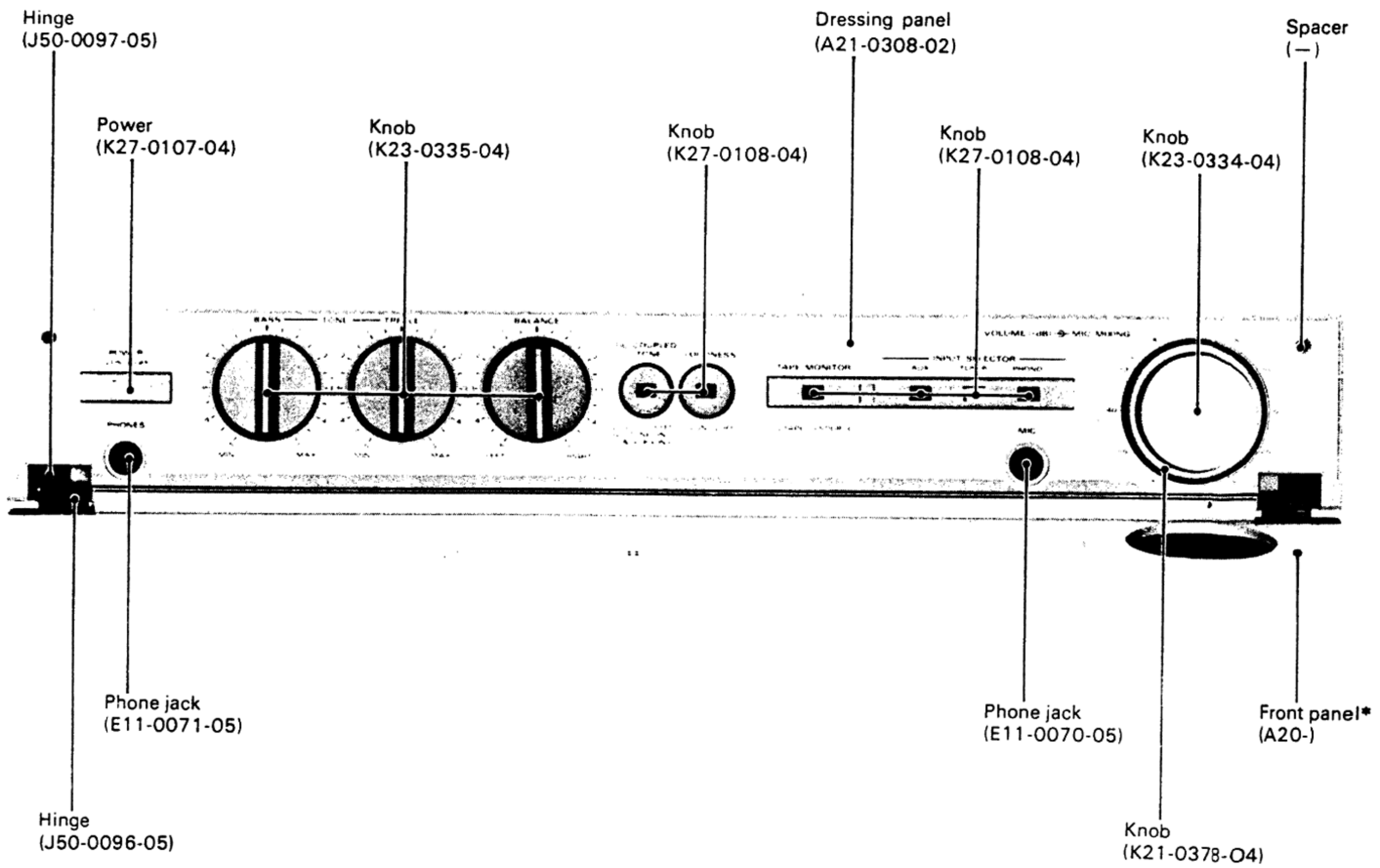

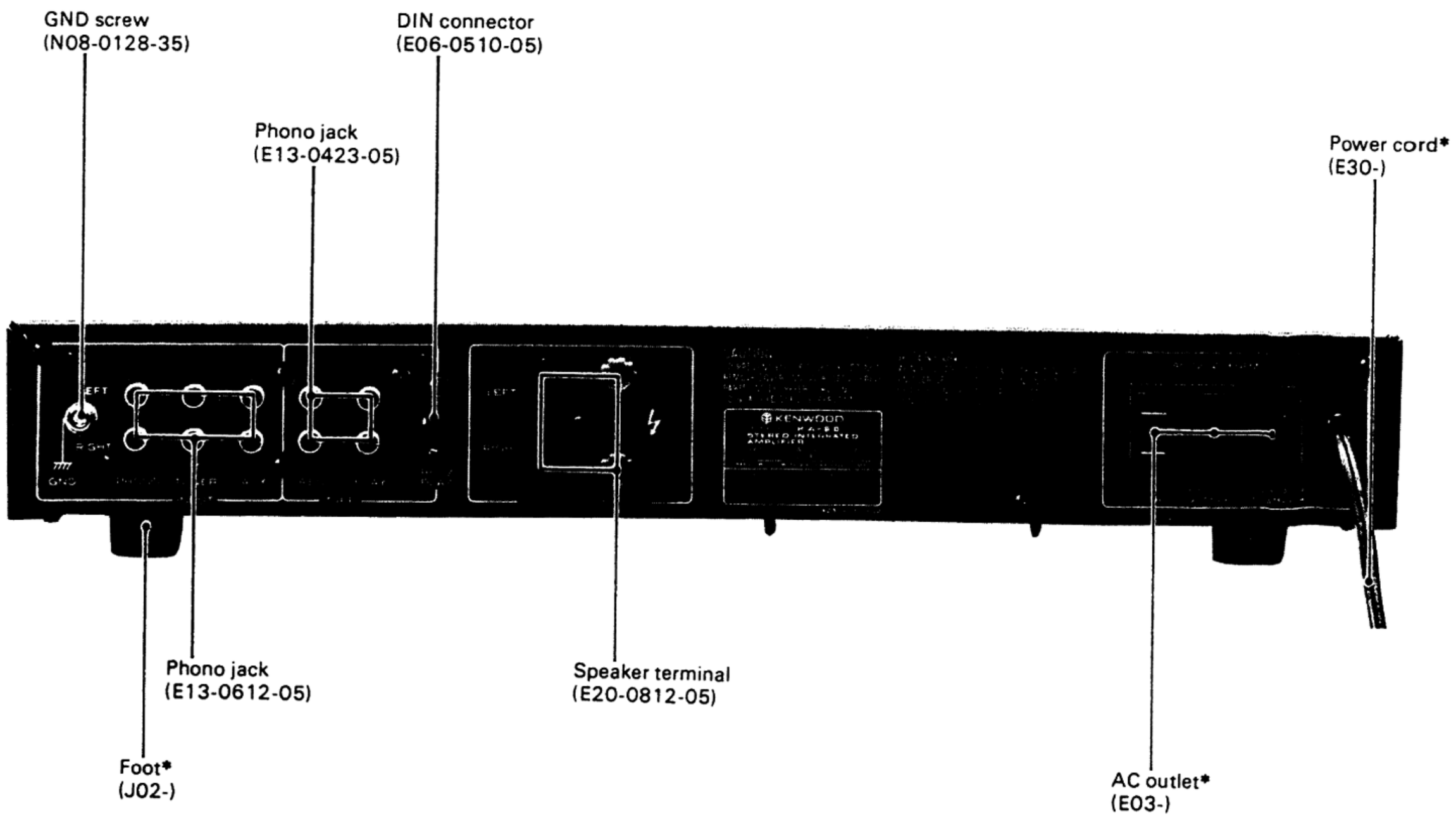

* Refer to Parts List.

INTERNAL VIEW

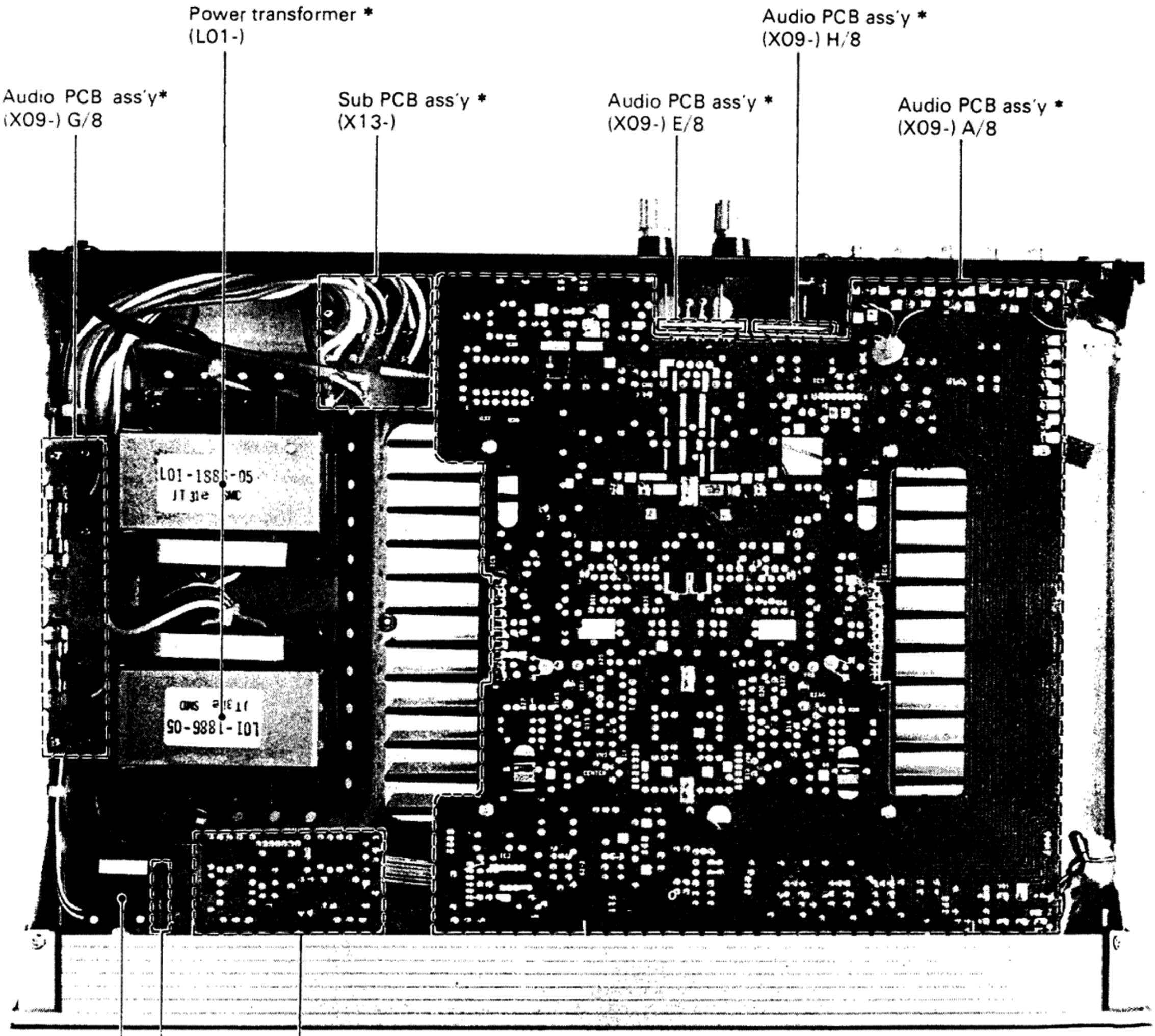

* Refer to Parts List.

BLOCK AND LEVEL DIAGRAMS

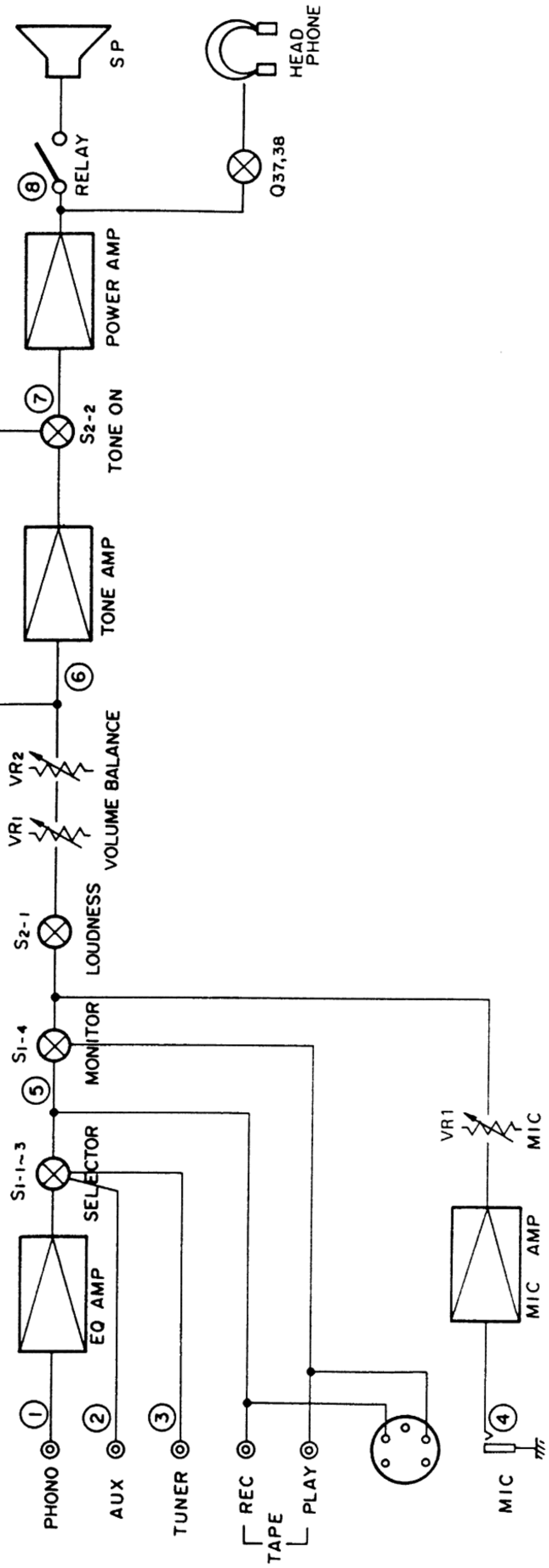

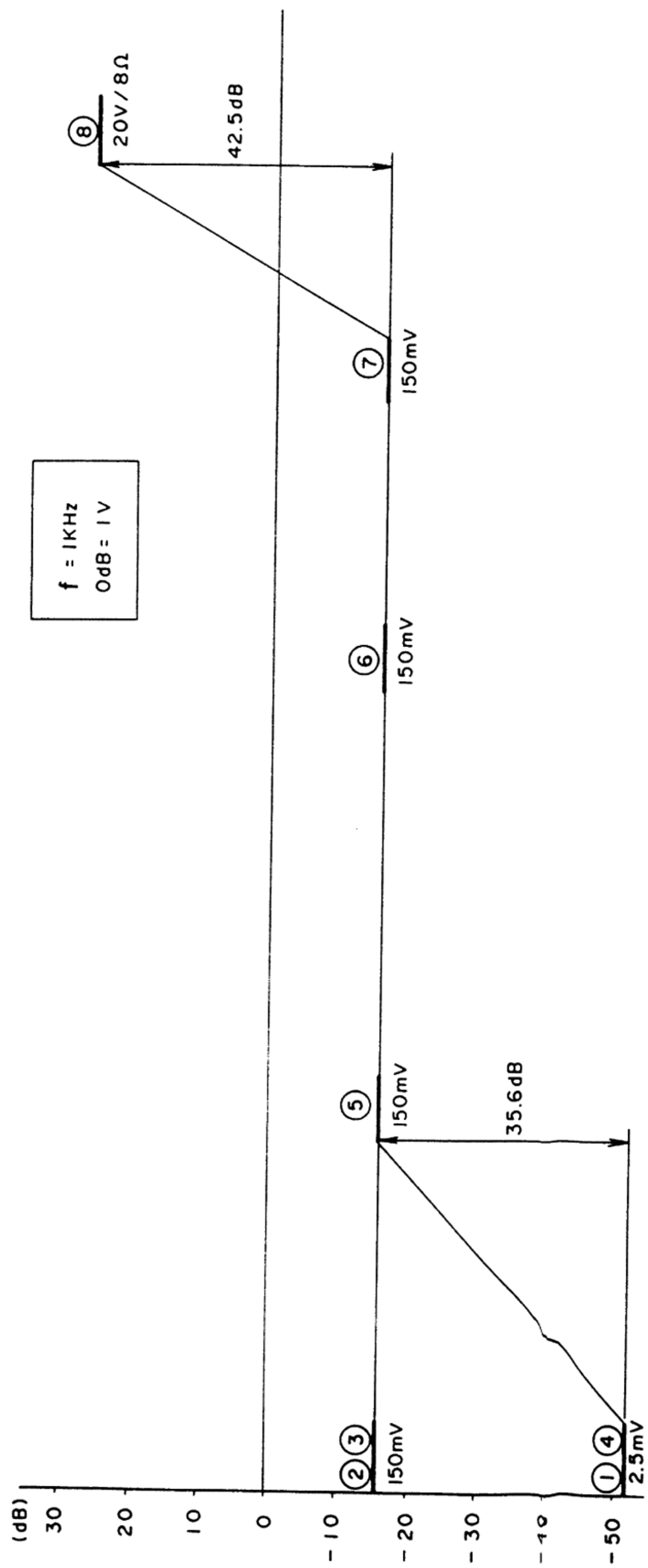

CIRCUIT DESCRIPTION

The amplifier should just amplify the signal as it was input and drive the loudspeaker. However, the amplifier has a time lag with certain amount of time constant, resulting in a different waveforms at the input and output terminals. In order to obtain the output waveform which is identical with that of the input, the response of the amplifier should be speeded up. That is, the signal rise time is made small and the slew rate is made large.
Increase of amplification stages and extension of band width in the amplifier tend to cause an oscillation in the high frequency range. To prevent the oscillation the phase characteristics is modified using capacitors at several places in the circuit. (Capacitance is also created by the layout and the wiring of component parts.)
However, the capacitance adversely affects the speedup of the circuit, resulting in a further deformation of the output waveform. Therefore, the phase compensating capacitance must be as small as possible.

HIGH SPEED Circuit and Phase Compensation

Because of the frequency characteristics of the amplifier itself, as mentioned previously, the signal amplitude decreases as the frequency goes higher. A well designed amplifier shows a frequency characteristics which does not change regardless of the output voltage, and it is similar to the characteristics of a single stage RC integrated circuit.

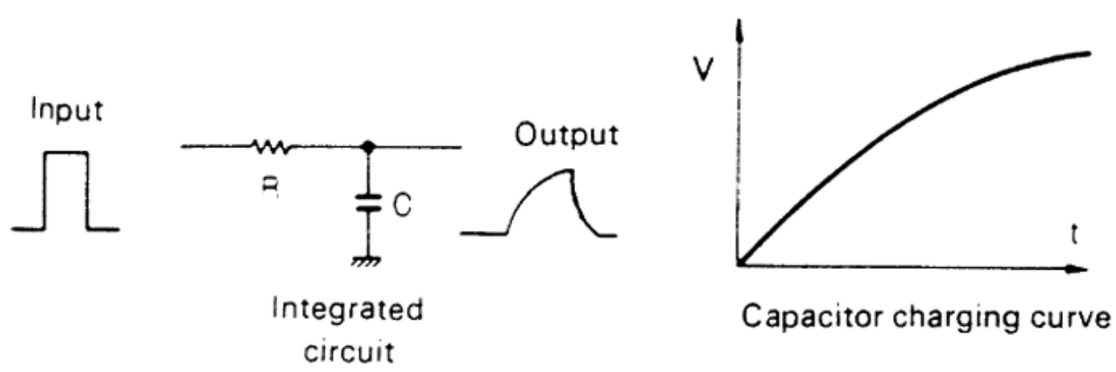

When a sharp-edged pulse as shown in the above figure is applied to the integrated circuit, the rises voltage across the capacitor C cannot change instantaneously, and the output voltage rises gradually as C is charged.
This C corresponding to the total capacitance of the amplifier determines the cutoff frequency, and it is also influential for the rise time of the signal. (It is also required to make resistance R small.) The phase conpensating capacitor which relates to the slew rate is assumed to be included in the C.
In order to speed up the output responce, it is necessary to minimize the charging time (i.e. small time constant) by reducing the capacitance and/or resistance.

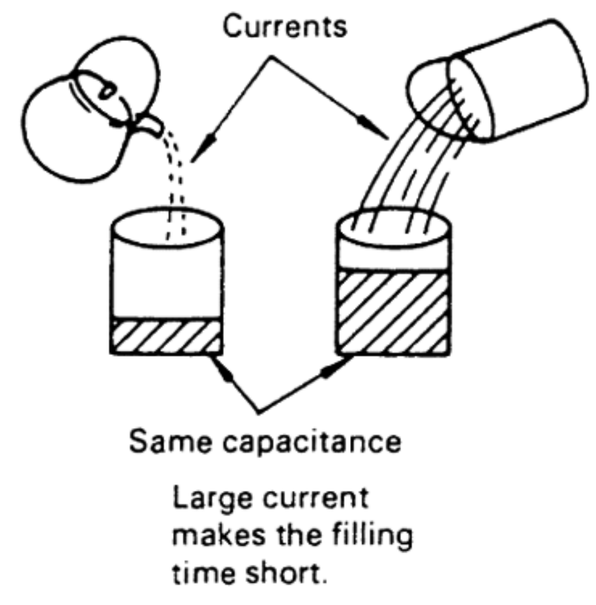

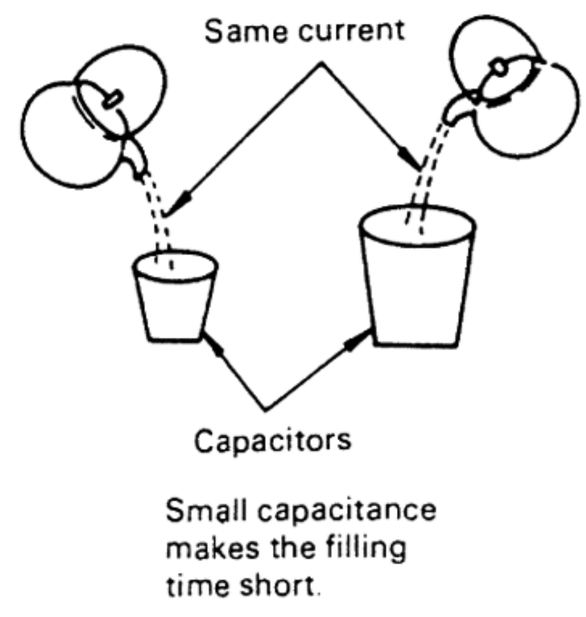

For words "slew rate" and "rise time", see L-05M Service Manual.
In model KA-80, the negative feedback is used in both the voltage amplification stage and the current amplification stage separately to speed up the amplifier response. This makes the phase compensating capacitor small and thus the circuit time constant becomes small, resulting in a short rise time and a large slew rate.

Dual Negative Feedback

In model KA-80, a negative feedback signal from the loudspeaker terminal is applied to the emitters of the pre-driver transistors and another feedback signals from their bases to the gate of the FET in the input differential amplifier.

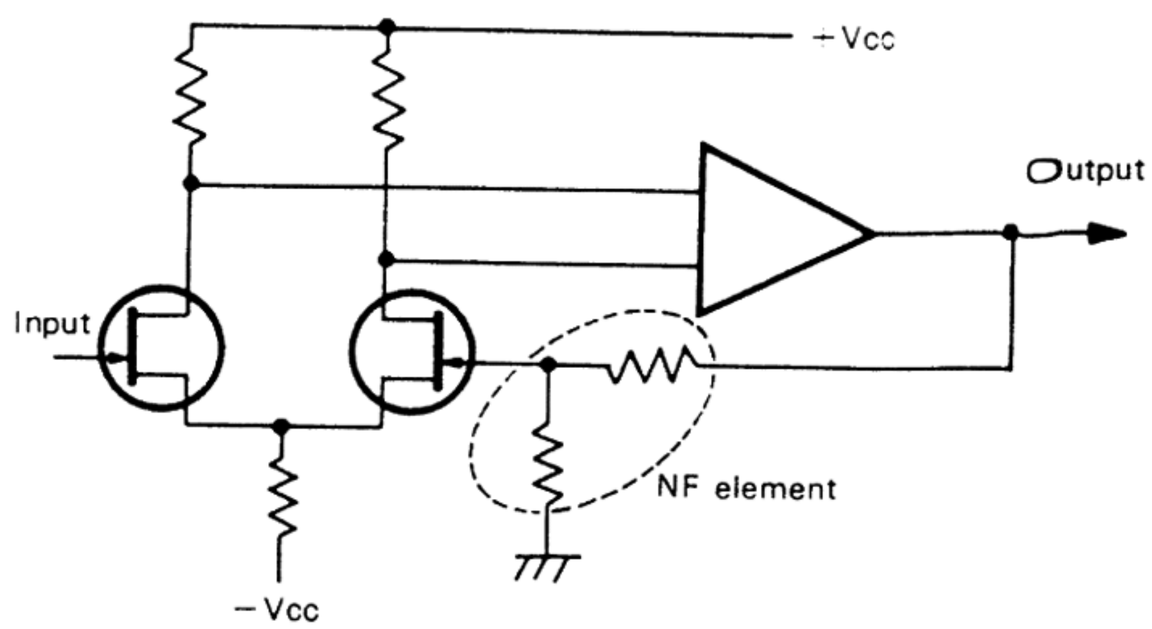

Conventional negative feedback

CIRCUIT DESCRIPTION

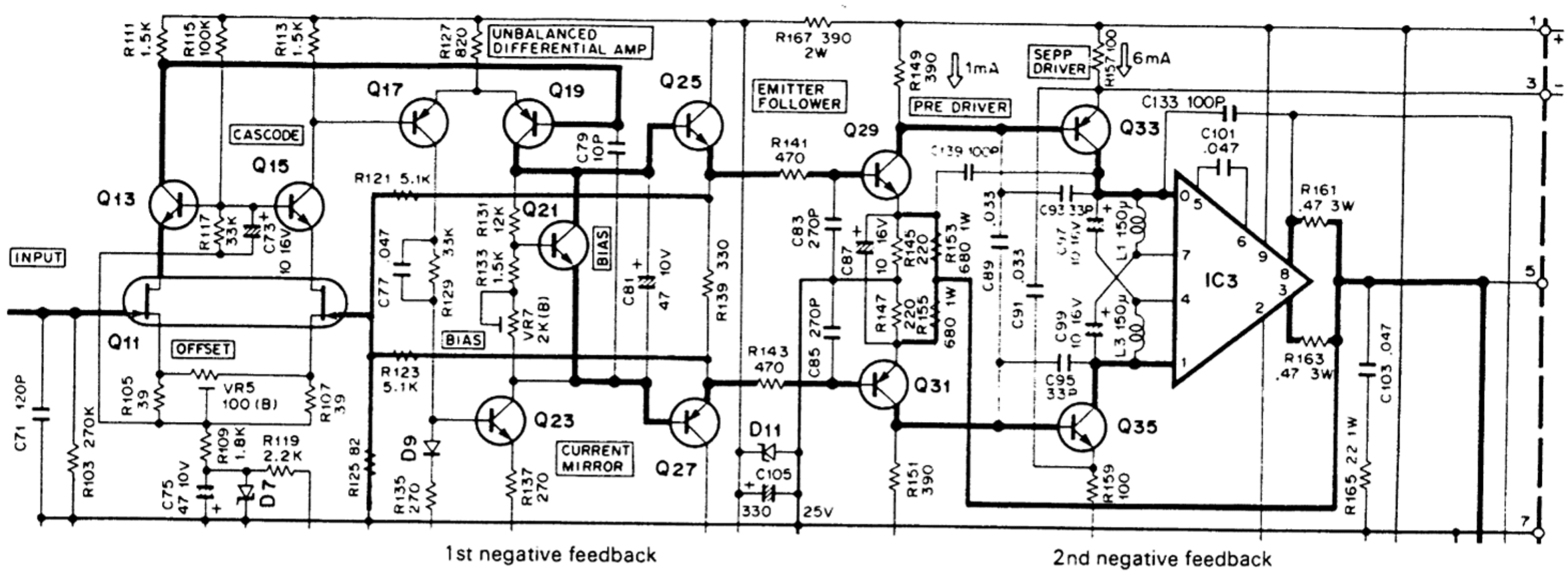

Negative feedback in model KA-80

Let's see how the offset voltage at the output terminal can be maintained at zero level.

Assume that a positive voltage appears at the output terminal (①). This voltage is divided by the resistors and applied to the emitters of predrivers Q29 and Q31 (②). The base voltage of the Q29 and Q31 is constant, since it is supplied from the stabilized DC amplifier of the previous stage (comprising Q13, Q15, Q17, Q19, Q21, Q23, Q25, and Q27).

The voltage applied to the emitters of Q29 and Q31 cause to lower the V_{BE} of Q29 (③), then the collector current of Q29 decreases (④) and the current of the positive complementary circuit also decreases (⑥).

On the other hand, the V_{BE} of Q31 increases (③), and the current of the negative complementary circuit also increases (⑥). Therefore, an increase of the negative current cancels the positive voltage on the output terminal, thus maintaining a zero offset (⑦).

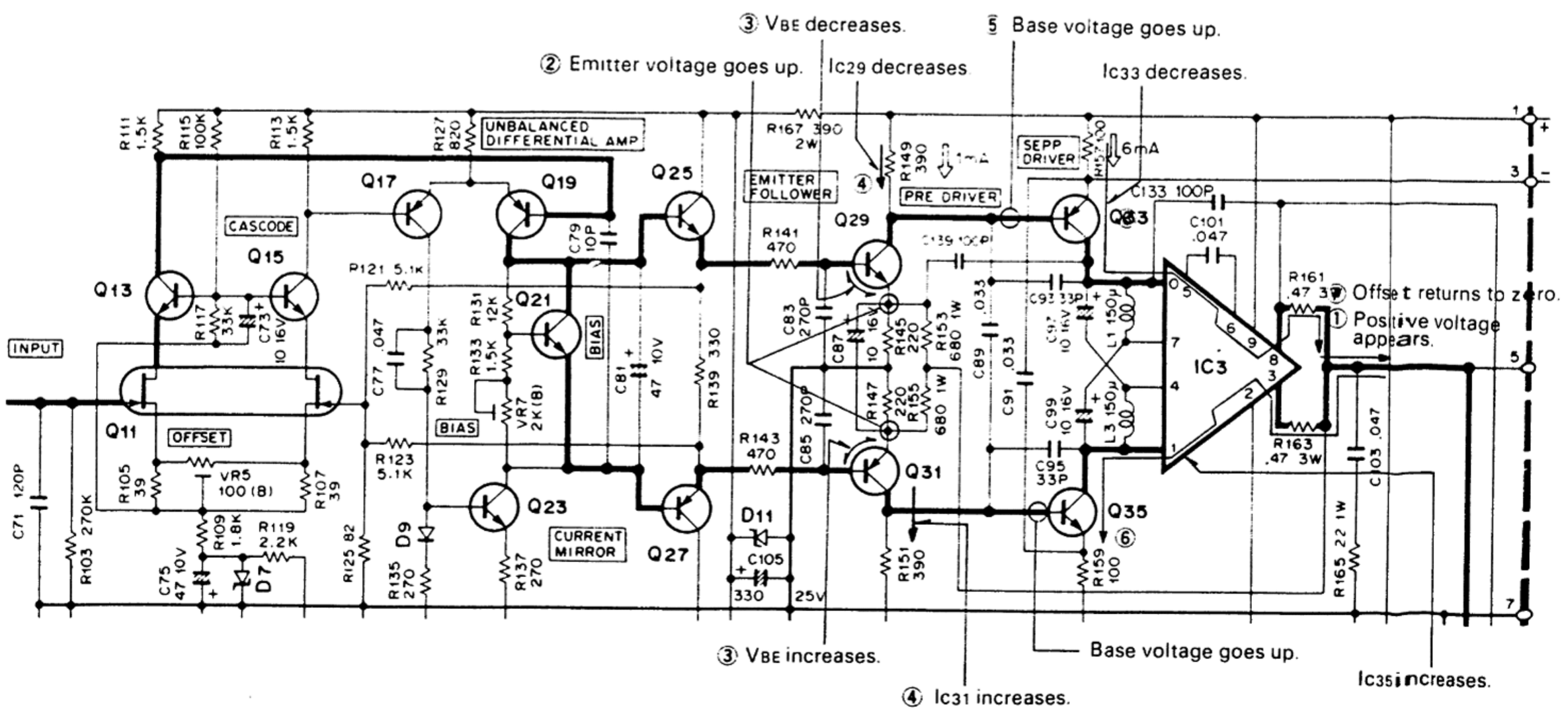

CIRCUIT DESCRIPTION

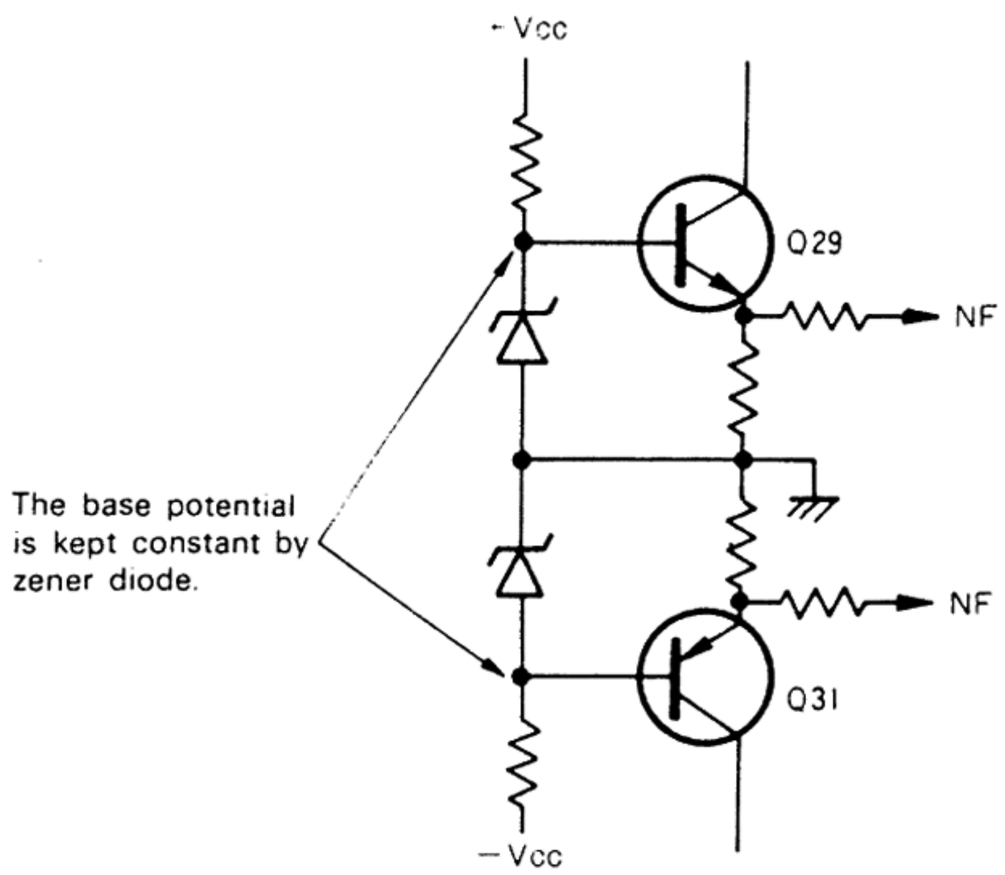

The bases of Q29 and Q31 are fixed.

Headphone Muting Circuit

Transistors Q37, Q38, and Q39 form a circuit to prevent the power-ON switching noise to let out from the headphone. The circuit consists of a time lag circuit using Q39 and transistor switches Q37 and Q38.

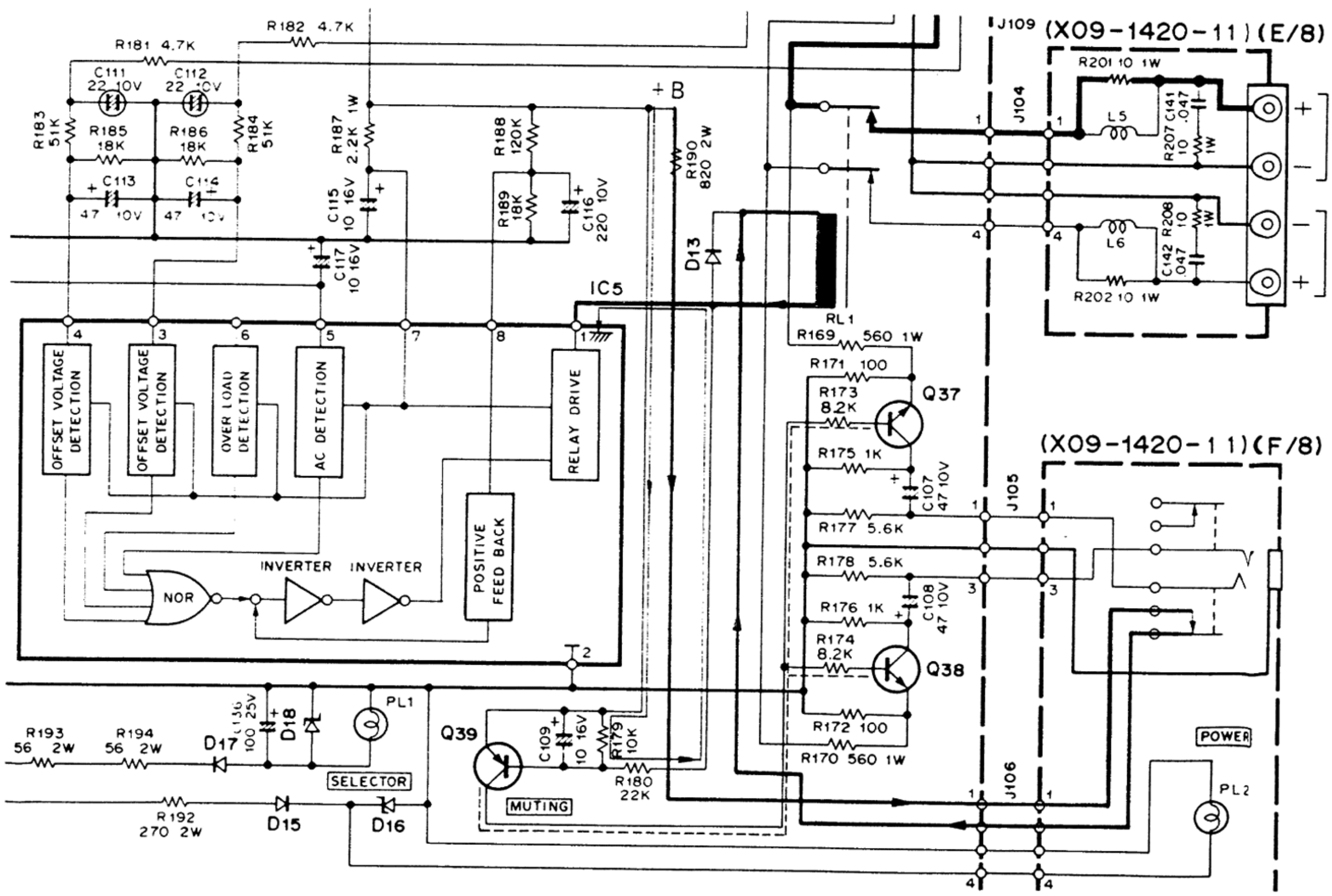

CIRCUIT DESCRIPTION

Assume that the power is switched ON. The power voltage is distributed throughout the circuit and also applied to the base of Q39. This is because pin 1 of IC5 does not fall to the GND immediately. (For further details, see KA-801 Service Manual.)
Therefore, no voltage is applied to the bases of Q37 and Q38, i.e. these transistors are in cutoff state, and the headphone does not emit any sound at all.
After a while, pin 1 of IC5 falls to the GND, and C109 starts to charge. When the C109 is fully charged, the base voltage of Q39 goes down which means the base-emitter will be forwardly biased and the transistor turns ON. Then, +Vcc is applied through resistors to the bases of Q37 and Q38. These transistors turn ON, and the headphone is activated.
When the power is switched OFF, the discharging current flows through R179 to cut off Q39 immediately, and emission of noise is prevented in the same manner as in the power ON sequence.
The headphone jack also functions as the power switch for the relay, which is deenergized when the headphone plug is inserted. Thus, the loudspeaker does not emit any noise at this moment.

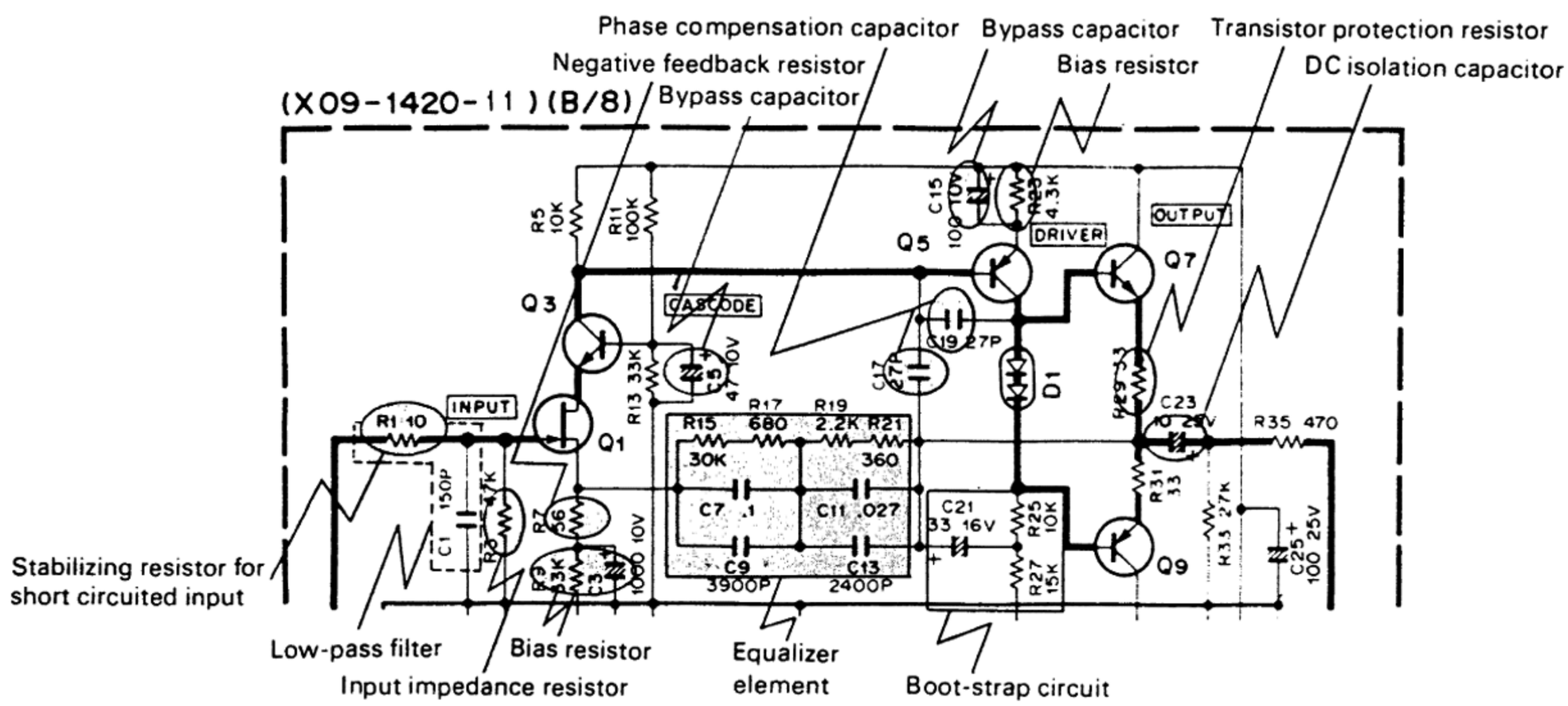

Preamplifier Circuit Diagram

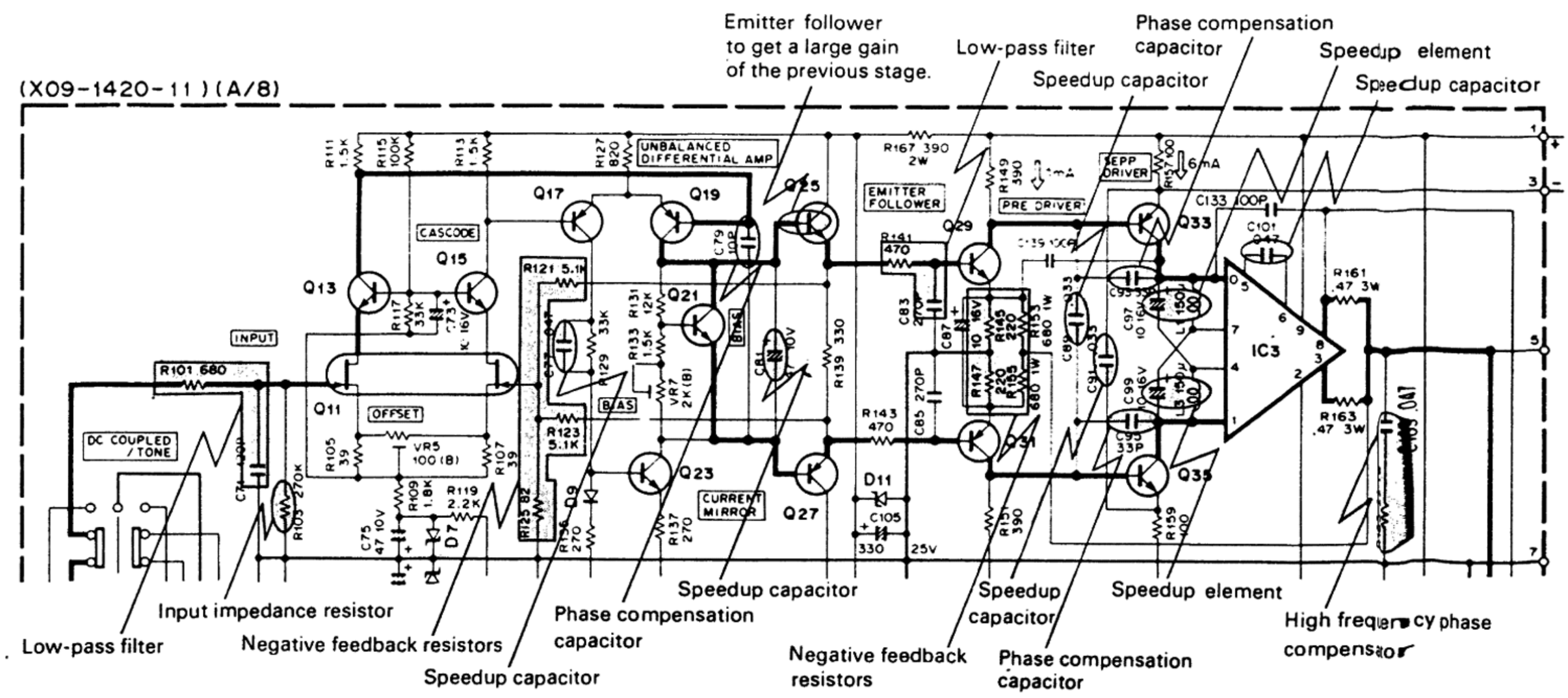

Power Amplifier Circuit Diagram

ADJUSTMENT/RÉGLAGES/ABGLEICH

POWER AMP OFFSET VOLTAGE ADJUSTMENT

1. Connect the DC voltmeter between the positive and negative speaker terminals.
2. Adjust the trimming pot VR5 (VR6) for a 0V reading of the DC voltmeter.

RÉGLAGE DE LA TENSION DE DECALAGE (OFFSET)

1. Brancher le voltmètre de c.c. aux bornes de sortie + et —.
2. Régler le potentiomètre ajustable VR5 (VR6) pour que la tension de sortie soit nulle.

OFFSET-SPANNUNG DER ENDVERST ÄRKER

1. Den Gleichspannungsmesser zwischen den Lautsprecherklemmen + und — der endverstärker anschließen.
2. Die Regelstange durch das Unterplattenloch einführen und den halbeingebetteten Widerstand VR5 (VR6) so regulieren, daß die Gleichspannungsmesser-Ablesung 0V ist.

BIAS CURRENT ADJUSTMENT

1. Turn the volume control knob fully counter clockwise.
2. Connect the DC voltmeter between the adjusting points ❶ and ❸ (❷ and ❹) of power amp pc board ass'y (X09-1420-11).
3. Adjust the BIAS CURRENT trimming pot VR7 (VR8), for a 600 mV reading of the voltmeter.

RÉGLAGE DU COURANT DE POLARISATION

1. Tourner le bouton de commande de volume à fond dans le sens invers de celui des aiguilles d'une montre.
2. Brancher le voltmètre de c.c. aux points d'alignment, ❶ et ❸ (❷ et ❹), sur la plaque circuit imprimé d'ampli de puissance (X09-1420-11).
3. Réguler le potentiomètre ajustable VR7 (VR8) de façon à ce que le voltmètre de c.c. indique 600 mV.

LEERLAUFS

1. Den Lautstärkeregler (VOLUME) drehen um die Leistungsverstärker-Aufnahme auf Null zu reduzieren.
2. Den Gleichspannungsmesser zwischen der Regulierungs-Punkte ❶ und ❸ (❷ und ❹) der endverstärker anschließen.
3. Den halbeingebetteten Widerstand VR7 (VR8) der Leistungsverstärker so regulieren, daß die Gleichspannungs-messerAblesung 600 mV ist.

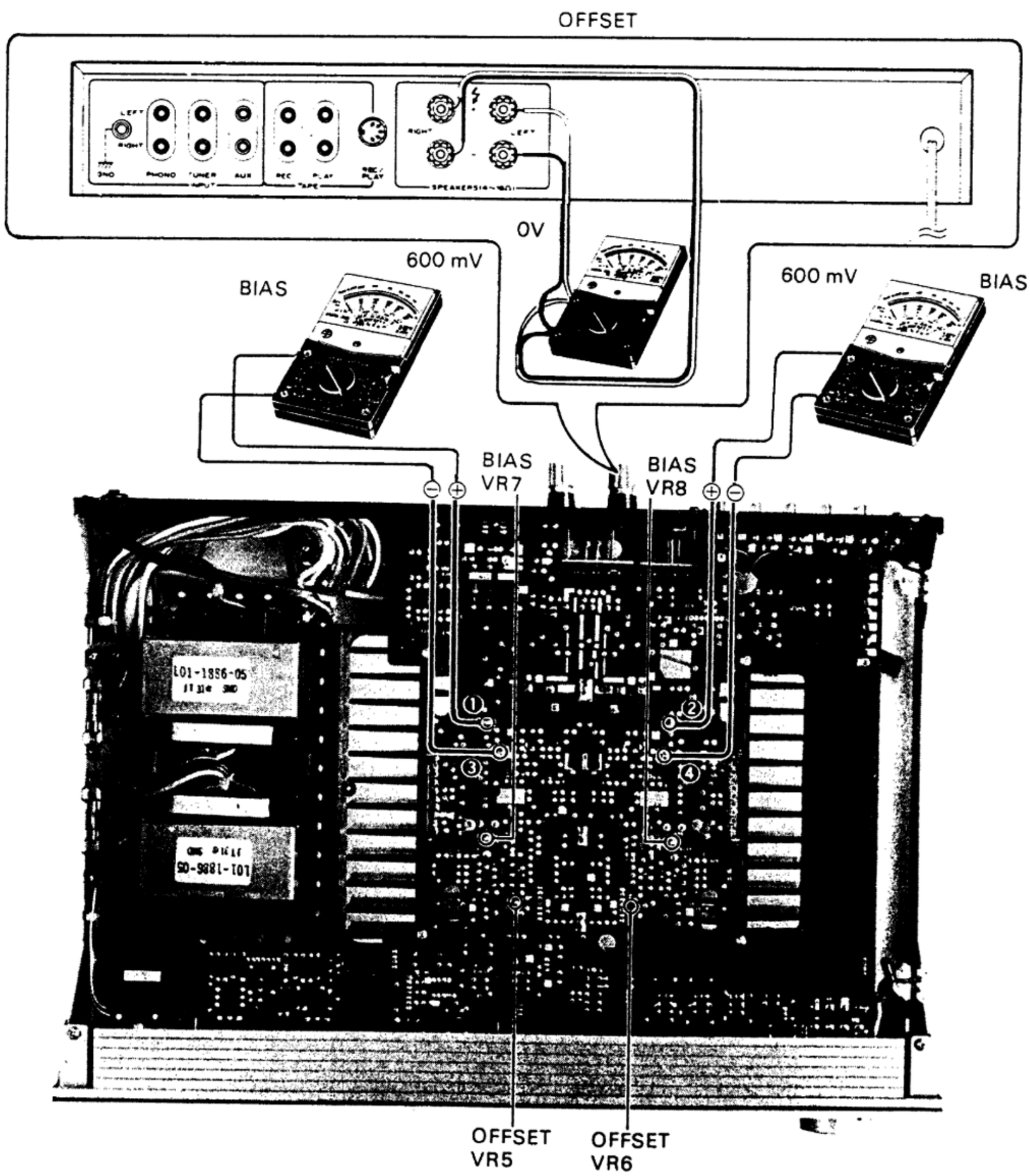

EXPLODED VIEW

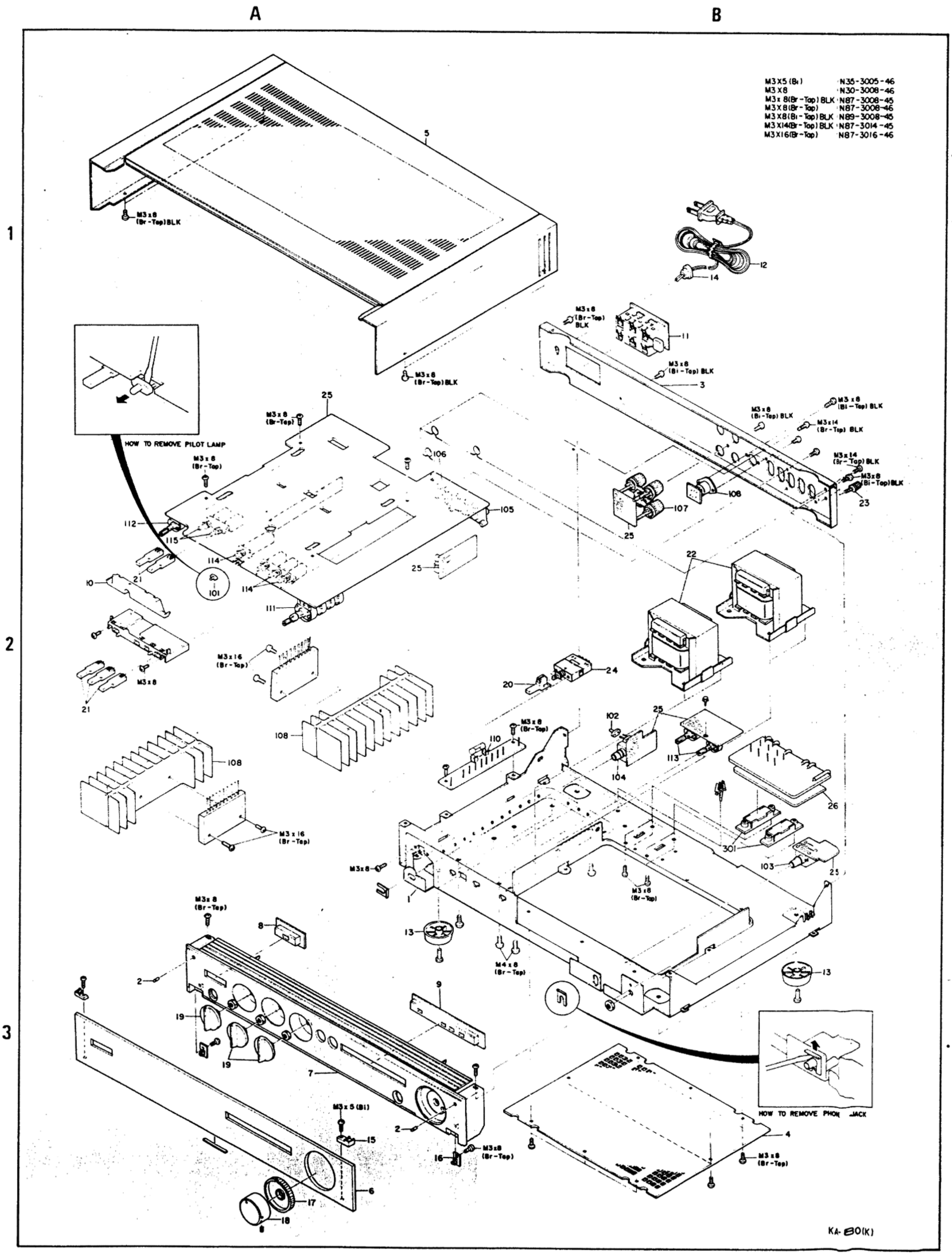

PC BOARD

AUDIO (X09-142x-xx) COMPONENT SIDE

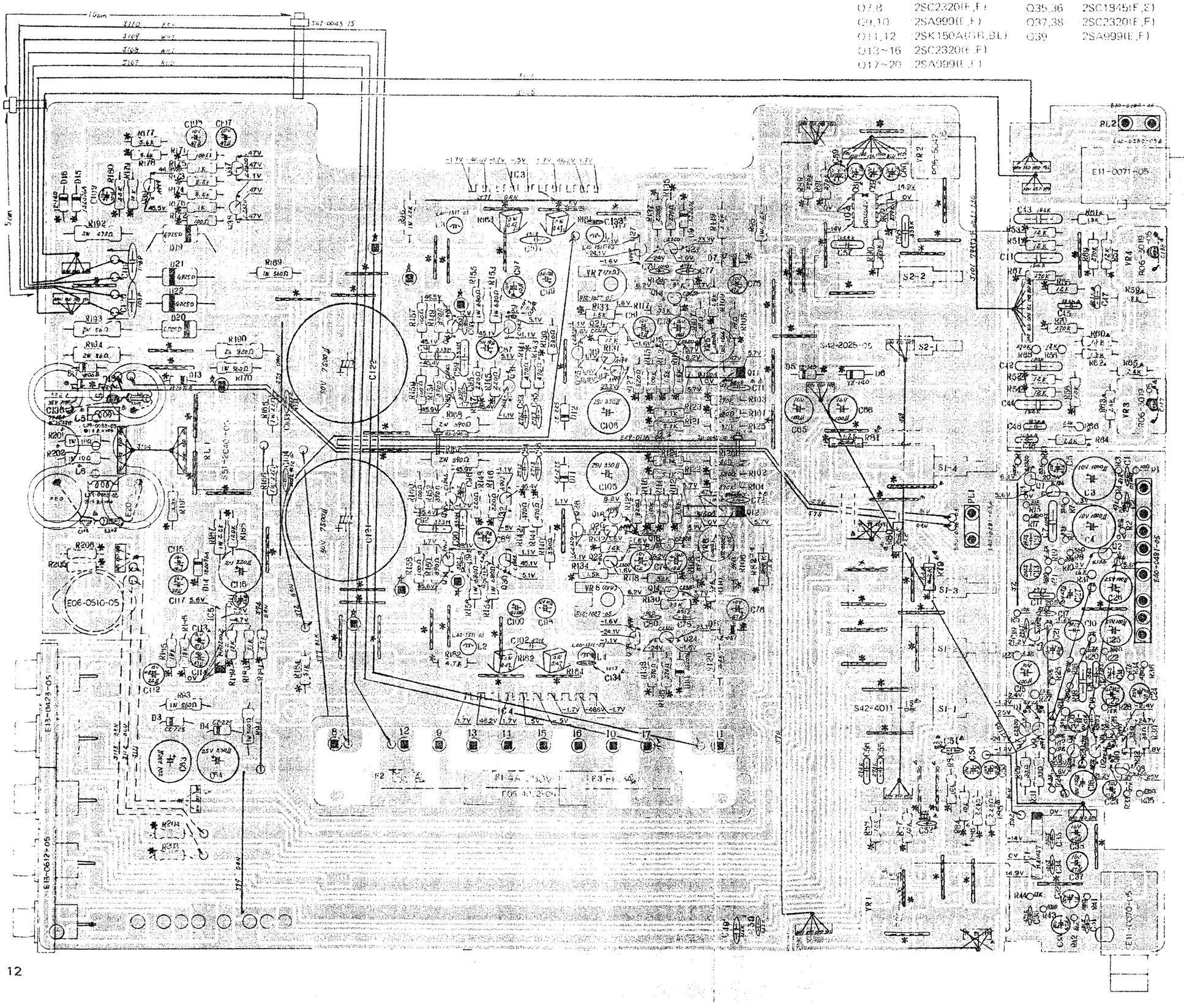

Q1,2	2SK163(K,L,M)	Q21~26	2SC2320(E,F)	IC1	HA1457	D9,10	1S2076,1S1555
	2SK136(P,Q,R)	Q27,28	2SA999(E,F)	IC2	NJM4558D(A)	D11,12	CZ-225
Q3,4	2SC2320(E,F)	Q29,30	2SC1845(F,E)	IC3,4	STK-0060*1	D13~15	1S2076A
Q5,6	2SA872	Q31~34	2SA992(F,E)	IC5	HA12002	D16	YZ-140
Q7,8	2SC2320(E,F)	Q35,36	2SC1845(F,E)			D17	W06B
Q9,10	2SA999(E,F)	Q37,38	2SC2320(E,F)	D1,2	SV-22	D18	WZ-162
Q11,12	2SK150A(GR,BL)	Q39	2SA999(E,F)	D3,4	CZ-225	D19~22	GP25D, U05C(S)
Q13~16	2SC2320(E,F)			D5,6	YZ-140		
Q17~20	2SA999(E,F)			D7,8	XZ-051		

Q・IC	VR・S	
	VR2	
Q37, IC3		
Q39, IC2		
Q38		
Q27,23	VR4	
	VR7	
Q13		
Q33,29,21		S2
Q15 Q25 Q19	VR5	
Q17,11		
Q35,31	VR3	
Q3, 1		
Q36,32, Q12		
Q18		
Q26, Q20 Q16, Q2	VR6	
Q34,30, Q22		
Q14	VR8	S1
IC5 Q28,24, Q5		
IC4		
Q7,9,10		
Q4,6 Q8		
IC1		
	VR1	

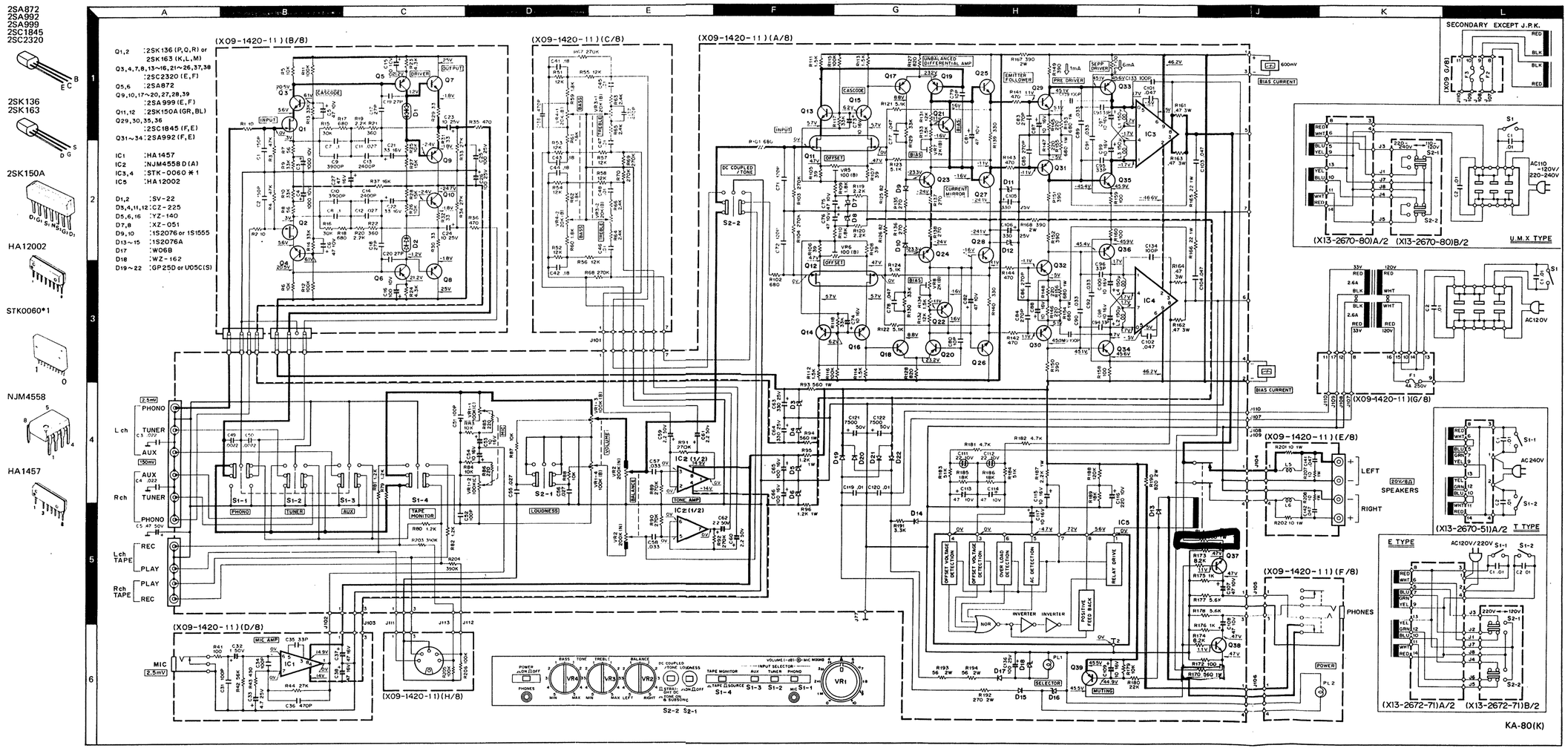

SPECIFICATIONS

Power output

48 watts per channel minimum RMS, both channels driven, at 8 ohms from 20Hz to 20,000Hz with no more than 0.02% total harmonic distortion.

Both Channels Driven	50 + 50 watts 8 ohms at 1,000 Hz 55 + 55 watts 4 ohms at 1,000 Hz
Total Harmonic Distortion (20 Hz to 20,000 Hz)	
AUX input to SPEAKER output	0.02% at rated power into 8 ohms 0.015% at 1/2 rated power into 8 ohms
PHONO input to SPEAKER output	0.02% at rated power with VOLUME −20 dB
Intermodulation Distortion (60 Hz : 7 kHz = 4 : 1)	0.0065% at rated power into 8 ohms
Damping Factor	120, DC −20,000 Hz into 8 ohms
Transient Response	
Rise Time	0.8 μS
Slew Rate	±150 V/μS
Power Bandwidth	5 Hz to 40,000 Hz at 0.05% T.H.D.
Frequency Response	
(DC COUPLED at ON)	DC to 450 kHz, −3 dB
(DC COUPLED at OFF)	18 Hz to 100 kHz, −3 dB
Speaker Impedance	Accept 4 ohms to 16 ohms
Input Sensitivity/Impedance	
Phono	2.5 mV/50 kohms
Tuner, AUX, Tape	150 mV/50 kohms
Signal to Noise Ratio (IHF, A)	
Phono	86 dB for 2.5 mV input 92 dB for 5.0 mV input 98 dB for 10 mV input
Tuner, AUX, Tape	106 dB for 150 mV input
Phono Maximum Input Level	230 mV (RMS), T.H.D. 0.02% at 1,000 Hz
Output Level/Impedance	
Tape REC (Pin)	150 mV/220 ohms
(DIN)	30 mV/75 kohms
Phono Frequency Response	RIAA standard curve ±0.3 dB (20 Hz to 20,000 Hz)
Tone Control	
Bass	±10 dB at 100 Hz
Treble	±10 dB at 10 kHz
Loudness Control (at −30 dB VOLUME Level)	+9 dB at 100 Hz
Subsonic Filter	18 Hz/6 dB

GENERAL

Power Requirement	60 Hz 120V (U.S.A. & Canada Model) or 50/60 Hz 110–120V/220–240V, switchable
Power Consumption	450 watts at full pwer
A.C. Outlet	Switched 2, Unswitched 1
Dimensions	W 440 mm (17-5/16") H 78 mm (3-1/18") D 330 mm (13")
Weight (Net)	7.9 kg (17.4 lbs)

Kenwood follows a policy of continuous advancements in development. For this reason specifications may be changed without notice.

PARTS LIST

Ref. No. 参照番号	Parts No. 部品番号	Description 部品名／規格	Remarks 備考
TOTAL			
1 3A	-	MAIN CHASSIS	
2 3A	-	SPACER	
3 1B	-	REAR PANEL	
4 3B	-	BOTTOM PLATE	
5 1A	A01-0361-02	METALLIC CABINET	*
6 3A	A20-1527-02	FRONT PANEL	*P
6 3A	A20-1527-02	FRONT PANEL	MX
6 3A	A20-1527-02	FRONT PANEL	UE
6 3A	A20-1527-02	FRONT PANEL	K
6 3A	A20-1528-02	FRONT PANEL	*T
7 3A	A21-0308-02	DRESSING PANEL	
8 3A	B07-0288-04	ESCUTCHEON	*
9 3A	B07-0289-04	ESCUTCHEON	*
-	B46-0055-20	WARRANTY CARD	P
-	B46-0060-00	WARRANTY CARD	T
-	B46-0061-20	WARRANTY CARD	K
-	B46-0062-20	WARRANTY CARD	U
-	B46-0063-00	WARRANTY CARD	U
-	B46-0064-10	WARRANTY CARD	X
-	B50-3045-00	INSTRUCTION MANUAL	*P
-	B50-3045-00	INSTRUCTION MANUAL	MX
-	B50-3046-00	INSTRUCTION MANUAL	KU
-	B50-3047-00	INSTRUCTION MANUAL	T
-	B50-3060-00	INSTRUCTION MANUAL	E
-	B59-0018-00	SERVICE STATIONS' LIST	
10 2A	B19-0208-03	LIGHT ACRYL BOARD	*
C1 ,2	C54-3310-39	CERAMIC 0.01UF P	ET
C1 ,2	C91-0023-05	CERAMIC 0.01UF AC250V	UM
C1 ,2	C91-0023-05	CERAMIC 0.01UF AC250V	X
C1 ,2	C91-0079-05	CERAMIC 0.01UF AC125V	KP
C3 ,4	C55-1722-38	CERAMIC 0.022UF Z	
C5	C24-1747-41	ELECTRO 0.47UF 50WV	
11 1B	E03-0007-05	AC OUTLET	KU
11 1B	E03-0007-05	AC OUTLET	MX
11 1B	E03-0009-05	AC OUTLET	P
12 1B	E30-0181-05	POWER CORD	KP
12 1B	E30-0185-05	POWER CORD	X
12 1B	E30-0459-05	POWER CORD	E
12 1B	E30-0515-05	POWER CORD	UM
12 1B	E30-0602-05	POWER CORD	T
-	H01-3065-04	CARTON BOX	*P
-	H01-3066-04	CARTON BOX	UM
-	H01-3066-04	CARTON BOX	XK
-	H01-3067-04	CARTON BOX	E
-	H01-3086-04	CARTON BOX	T
-	H10-1538-03	POLYSTYRENE FIXTURE	
-	H25-0078-04	BAG	
-	H25-0179-04	BAG	
13 3B	J02-0088-05	FOOT	K
13 3B	J02-0089-05	FOOT	PU
13 3B	J02-0089-05	FOOT	MX
13 3B	J02-0089-05	FOOT	ET
14 1B	J41-0024-15	BUSHING	XT
14 1B	J41-0033-05	BUSHING	UM
14 1B	J41-0033-05	BUSHING	E
14 1B	J41-0033-05	BUSHING	KP
15 3A	J50-0096-05	HINGE	*
16 3A	J50-0097-05	HINGE	*

Ref. No. 参照番号	Parts No. 部品番号	Description 部品名／規格	Remarks 備考
17 3A	K21-0378-04	KNOB(MIC)	*
18 3A	K23-0334-04	KNOB(VOLUME)	*
19 3A	K23-0335-04	KNOB(TONE,BALANCE)	
20 2B	K27-0107-04	KNOB(POWER)	
21 2A	K27-0108-04	KNOB(PUSHBUTTON)	
22 2B	L01-1881-05	POWER TRANSFORMER	*K
22 2B	L01-1885-05	POWER TRANSFORMER	UM
22 2B	L01-1885-05	POWER TRANSFORMER	X
22 2B	L01-1886-05	POWER TRANSFORMER	ET
22 2B	L01-1888-05	POWER TRANSFORMER	P
23 2B	N08-0128-35	GND SCREW	
S1	S40-1010-05	PUSH SWITCH FIG24	UM
S1	S40-1010-05	PUSH SWITCH FIG24	X
S1	S40-1011-05	PUSH SWITCH FIG24	K
S1	S40-2085-05	PUSH SWITCH FIG24	P
S1	S40-2099-05	PUSH SWITCH FIG24	ET
25 1A	X09-1420-11	AUDIO AMP PCB ASSY	*K
25 1A	X09-1420-11	AUDIO AMP PCB ASSY	P
25 1A	X09-1420-81	AUDIO AMP PCB ASSY	UM
25 1A	X09-1420-81	AUDIO AMP PCB ASSY	X
25 1A	X09-1422-71	AUDIO AMP PCB ASSY	ET
26 2B	X13-2670-51	SUB PCB ASSY	*T
26 2B	X13-2670-80	SUB PCB ASSY	UM
26 2B	X13-2670-80	SUB PCB ASSY	X
26 2B	X13-2672-71	SUB PCB ASSY	E
AUDIO (X09-142x-xx)			
PL1 101	B30-0196-05	LAMP(12V,100MA)	
PL2 102	B30-0084-05	LAMP(8V,50MA)	
C1 ,2	C71-1715-15	CERAMIC 150PF J	
C3 ,4	C24-1010-81	ELECTRO 1000UF 10WV	
C5 ,6	C24-1047-61	ELECTRO 47UF 10WV	
C7 ,8	C46-1710-45	MYLAR 0.1UF J	
C9 ,10	C47-1739-25	POLYSTY 3900PF J	
C11 ,12	C46-1727-35	MYLAR 0.027UF J	
C13 ,14	C47-1724-25	POLYSTY 2400P J	
C15 ,16	C24-1010-71	ELECTRO 100UF 10WV	
C17 -20	C71-1727-05	CERAMIC 27PF J	
C21 ,22	C24-1233-61	ELECTRO 33UF 16WV	
C23 ,24	C25-1410-67	LL-ELEC 10UF 25WV	
C25 ,26	C24-1410-71	ELECTRO 100UF 25WV	
C27	C24-1247-61	ELECTRO 47UF 16WV	
C31	C71-1710-15	CERAMIC 100PF J	
C32	C24-1710-51	ELECTRO 1UF 50WV	
C33	C24-1447-51	ELECTRO 4.7UF 25WV	
C34	C71-1710-15	CERAMIC 100PF J	
C35	C71-1733-05	CERAMIC 33PF J	
C36	C52-1747-16	CERAMIC 470PF K	
C37 ,38	C24-1247-61	ELECTRO 47UF 16WV	
C41 -44	C46-1718-46	MYLAR 0.18UF K	
C45 -48	C46-1710-36	MYLAR 0.01UF K	
C49 ,50	C52-1722-26	CERAMIC 0.0022UF K	
C51 ,52	C71-1710-15	CERAMIC 100PF J	
C53 ,54	C24-1210-61	ELECTRO 10UF 16WV	
C55 ,56	C46-1727-36	MYLAR 0.027UF K	
C57 ,58	C46-1733-36	MYLAR 0.033UF K	
C59 -62	C24-1722-51	ELECTRO 2.2UF 50WV	
C63 ,64	C24-1433-71	ELECTRO 330UF 25WV	
C65 ,66	C24-1210-71	ELECTRO 100UF 16WV	
C71 ,72	C71-1712-15	CERAMIC 120PF J	
C73 ,74	C24-1210-61	ELECTRO 10UF 16WV	
C75 ,76	C24-1047-61	ELECTRO 47UF 10WV	

Refer to exploded view on P10.

PARTS LIST

Ref. No. 参照番号	Parts No. 部品番号	Description 部品名／規格	Remarks 備考
C77 ,78	C55-1747-38	CERAMIC 0.047UF Z	
C79 ,80	C71-1710-02	CERAMIC 10PF D	
C81 ,82	C24-1047-61	ELECTRO 47UF 10WV	
C83 -86	C71-1727-15	CERAMIC 270PF J	
C87 ,88	C24-1210-61	ELECTRO 10UF 16WV	
C89 -92	C46-2033-37	MYLAR 0.033UF M	
C93 -96	C71-1733-05	CERAMIC 33PF J	
C97 -100	C24-1210-61	ELECTRO 10UF 16WV	
C101-104	C55-1747-38	CERAMIC 0.047UF Z	
C105,106	C24-1433-71	ELECTRO 330UF 25WV	
C107,108	C24-1047-61	ELECTRO 47UF 10WV	
C109	C24-1210-61	ELECTRO 10UF 16WV	
C111,112	C26-1022-67	NP-ELEC 22UF 10WV	
C113,114	C24-1047-61	ELECTOR 47UF 10WV	
C115	C24-1210-61	ELECTRO 10UF 16WV	
C116	C24-1022-71	ELECTRO 220UF 10WV	
C117	C24-1210-61	ELECTRO 10UF 16WV	
C119,120	C54-2710-39	CERAMIC 0.01UF P	
C121,122	C90-0417-05	ELECTRO 7500UF 50WV	
C133,134	C71-1710-15	CERAMIC 100PF J	
C135	C24-1710-51	ELECTRO 1UF 50WV	
C136	C24-1410-71	ELECTRO 100UF 25WV	
C137,138	C52-1747-16	CERAMIC 470PF K	
C139,140	C71-1710-15	CERAMIC 100PF J	
C141,142	C55-1747-38	CERAMIC 0.047UF Z	
103 3B	E11-0070-05	PHONE JACK(MIC)	
104 2B	E11-0071-05	PHONE JACK(PHONES)	
105 2B	E13-0423-05	PHONO JACK(4P)	
106 2A	E13-0612-05	PHONO JACK(6P)	
107 2B	E20-0812-05	SPEAKER TERMINAL	
108 2B	E06-0510-05	DIN CONNECTOR	
F1 ,2	F05-4021-05	FUSE(4A) X09-1420-11	
F1 ,2	F05-4022-05	FUSE(4A) X09-1420-11	
F1 ,2	F05-6021-05	FUSE(6A) X09-1420-81	
F1 ,2	F05-6322-05	FUSE(6.3A) X09-1422-71	
110 2B	J13-0041-05	FUSE HOLDER X09-1420-11	
110 2B	J13-0041-05	FUSE HOLDER X09-1421-01	
110 2B	J13-0055-05	FUSE HOLDER X09-1420-81	
110 2B	J13-0055-05	FUSE HOLDER X09-1422-71	
L1 -4	L40-1511-03	INDUCTOR	
L5 ,6	L39-0085-05	COIL	
R29 -32	R43-1233-05	FL-PROOF RD33 J 2E	
R93 ,94	R47-5456-15	FL-PROOF RS560 J 3A	
R95 ,96	R47-5412-25	FL-PROOF RS1,2K J 3A	
R119,120	R43-1222-25	FL-PROOF RD2,2K J 2E	
R139,140	R43-1233-15	FL-PROOF RS330 J 2E	
R141-144	R43-1247-15	FL-PROOF RD470 J 2E	
R145-148	R43-1222-15	FL-PROOF RD220 J 2E	
R149-152	R43-1239-15	FL-PROOF RS390 J 2E	
R153-156	R47-5468-15	FL-PROOF RS680 J 3A	
R157-160	R43-1210-15	FL-PROOF RD100 J 2E	
R161-164	R92-0203-05	FL-PROOF RS0.47 K 3F	
R165,166	R47-5422-05	FL-PROOF RS22 J 3A	
R167,168	R47-5539-15	FL-PROOF RS390 J 3D	
R169,170	R47-5456-15	FL-PROOF RS560 J 3A	
R187	R47-5422-25	FL-PROOF RS2,2K J 3A	
R190	R47-5582-15	FL-PROOF RS820 J 3D	
R192	R47-5527-15	FL-PROOF RS270 J 3D	
R193,194	R47-5556-05	FL-PROOF RS56 J 3D	
R201,202	R47-5410-05	FL-PROOF RS10 J 3A	
R207,208	R47-5410-05	FL-PROOF RS10 J 3A	

Ref. No. 参照番号	Parts No. 部品番号	Description 部品名／規格	Remarks 備考
VR1 111	R24-9006-15	POT. (VOLUME,MIC)	*
VR2 112	R06-5042-05	POT. (BALANCE)	
VR3 ,4	R06-3019-05	POT.(TONE) FIG113	
VR5 ,6	R12-0502-05	TRIMMING POT.100 OFFSET	
VR7 ,8	R12-1027-05	TRIMMING POT. 2K BIAS	
RL1	S51-2040-05	RELAY	
S1	S42-4011-15	PUSH SWITCH FIG114	
S2	S42-2025-05	PUSH SWITCH FIG115	
D1 ,2	V11-2200-10	SV-22	
D3 ,4	V11-4103-20	CZ-225	
D5 ,6	V11-0254-05	YZ-140	
D7 ,8	V11-4103-60	XZ-051	
D9 ,10	V11-0271-05	1S2076/1S1555	
D11 ,12	V11-4103-20	CZ-225	
D13 -15	V11-0273-05	1S2076A	
D16	V11-0254-05	YZ-140	
D17	V11-0295-05	W06B	
D18	V11-4106-80	WZ-162	
D19 -22	V11-0465-05	GP25D/U05C(S)	
IC1	V30-0264-10	HA1457	
IC2	V30-0248-10	NJM4558D(A)	
IC3 ,4	V30-0435-10	STK-0060*1	*
IC5	V30-0291-10	HA12002	
Q1 ,2	V09-0144-30	2SK163(K,L,M)	
Q1 ,2	V09-0149-40	2SK136(P,Q,R)	
Q3 ,4	V03-2320-10	2SC2320(E,F)	
Q5 ,6	V01-0198-05	2SA872	
Q7 ,8	V03-2320-10	2SC2320(E,F)	
Q9 ,10	V01-0999-10	2SA999(E,F)	
Q11 ,12	V09-0137-50	2SK150A(GR,BL)	
Q13 -16	V03-2320-10	2SC2320(E,F)	
Q17 -20	V01-0999-10	2SA999(E,F)	
Q21 -26	V03-2320-10	2SC2320(E,F)	
Q27 ,28	V01-0999-10	2SA999(E,F)	
Q29 ,30	V03-1845-10	2SC1845(F,E)	
Q31 -34	V01-0992-10	2SA992(F,E)	
Q35 ,36	V03-1845-10	2SC1845(F,E)	
Q37 ,38	V03-2320-10	2SC2320(E,F)	
Q39	V01-0999-10	2SA999(E,F) FIG116	
SUB (X13-267x-xx)			
S2	S31-2050-05	SLIDE SWITCH Fig.301	

INSTRUCTION FOR PARTS LIST

Ref. No. 参照番号	Parts No. 部品番号	Description 部品名／規格	Remarks 備考
18 1A	A01-0608-12	METALLIC CABINET	*
19 2A	A20-1979-11	FRONT PANEL ASSY	*K
19 2A	A20-1979-11	FRONT PANEL ASSY	PM
19 2A	A20-1979-11	FRONT PANEL ASSY	SU
19 2A	A20-1979-11	FRONT PANEL ASSY	XW
R221	R43-1333-15	FL-PROOF RD330 J 2H	*
R222	R43-1368-15	FL-PROOF RD680 J 2H	*
VR1 ,2	R12-3301-05	TRIMMING POT, 20K(B)	
VR3 ,4	R19-4305-05	POTENTIOMETER (OUTPUT)	*
VR5 ,6	R12-2302-05	TRIMMING POT, 5K(B)	

① Exploded view drawing No.
② Position in exploded view.
③ Symbol of new parts.
④ Area to which parts are shipped. Example: A20-1979-11 is the parts No of FRONT PANEL ASS'Y for the "K" type products (for USA).
When this column is blank, it means that the same type of parts (same parts No.) are used for the products shipped to all areas.
⑤ Reference No. in schematic diagram.
⑥ Abbreviation of "Flame proof metal oxide film resistor". All capacitors and resistors are listed using abbreviations
⑦ Abbreviations

* Abbreviations of capacitors (Parts No. with initial letter "C")
  ELECTRO ..... Electrolytic capacitor
  LL-ELEC ..... Low leak electrolytic capacitor
  NP-ELEC ..... Non-pole electrolytic capacitor
  MICA ..... Mica capacitor
  POLYSTY ..... Polystyrene capacitor
  MYLAR ..... Mylar capacitor
  CERAMIC ..... Ceramic capacitor
  TANTAL ..... Tantalum capacitor
  MF ..... Metallized film capacitor
  OIL ..... Oil capacitor
  The unit "UF" is used in lieu of "μF".

* Abbreviations of resistors (Parts No. with initial letters "R")
  RC ..... Carbon composition resistor
  RD ..... Carbon film resistor
  FL-PROOF RD ..... Flame-proof carbon film resistor
  RW ..... Wire wound power resistor
  FL-PROOF RS ..... Flame-proof metal oxide film resistor
  RN ..... Metal film resistor
  2B ..... Rated wattage 1/8W
  2E ..... Rated wattage 1/4W
  2H ..... Rated wattage 1/2W
  3A ..... Rated wattage 1W
  3D ..... Rated wattage 2W
  3F ..... Rated wattage 3W
  3G ..... Rated wattage 4W
  3H ..... Rated wattage 5W
  All resistor values are indicated with the unit (Ω) omitted.

* Abbreviations common to capacitors and resistors
  C ..... ±0.25pF (Used for capacitors only)
  D ..... ±0.5pF (Used for capacitors only)
  F ..... ±1%
  G ..... ±2%
  J ..... ±5%
  K ..... ±10%
  M ..... ±20%
  Z ..... +80%, −20% (Used for capacitors only)
  P ..... +100%, −0% (Used for capacitors only)

⑧ Resistors RD (carbon composition resistors) are not listed in the parts list. For values, refer to the schematic diagram

A product of
TRIO-KENWOOD CORPORATION
6-17, 3-chome, Aobadai, Meguro-ku, Tokyo 153, Japan

KENWOOD ELECTRONICS, INC.
1315 E. Watsoncenter Rd, Carson, California 90745, U.S.A.
75 Seaview Drive, Secaucus, New Jersey 07094, U.S.A.
1098 North Tower Lane Bensenville, Illinois 60106, U.S.A.
TRIO-KENWOOD ELECTRONICS, N.V.
Leuvensesteenweg 504 B-1930 Zaventem, Belgium
TRIO-KENWOOD ELECTRONICS GmbH
Rudolf-Braas-Str. 20, 6056 Heusenstamm, West Germany
TRIO-KENWOOD FRANCE S.A.
5, Boulevard Ney, 75018 Paris, France
TRIO-KENWOOD SVENSKA AB
Kemistvagen 10A, S-183 21 Taby, Sweden
TRIO-KENWOOD (AUSTRALIA) PTY. LTD.
30 Whiting St., Artarmon, N.S.W. 2064, Australia
KENWOOD & LEE ELECTRONICS, LTD.
Room 501, Wang Kee Building, 5th Floor, 34-37, Connaught Road, Central, Hong Kong