KENWOOD

SOLID STATE STEREO AMPLIFIER

KA-8004

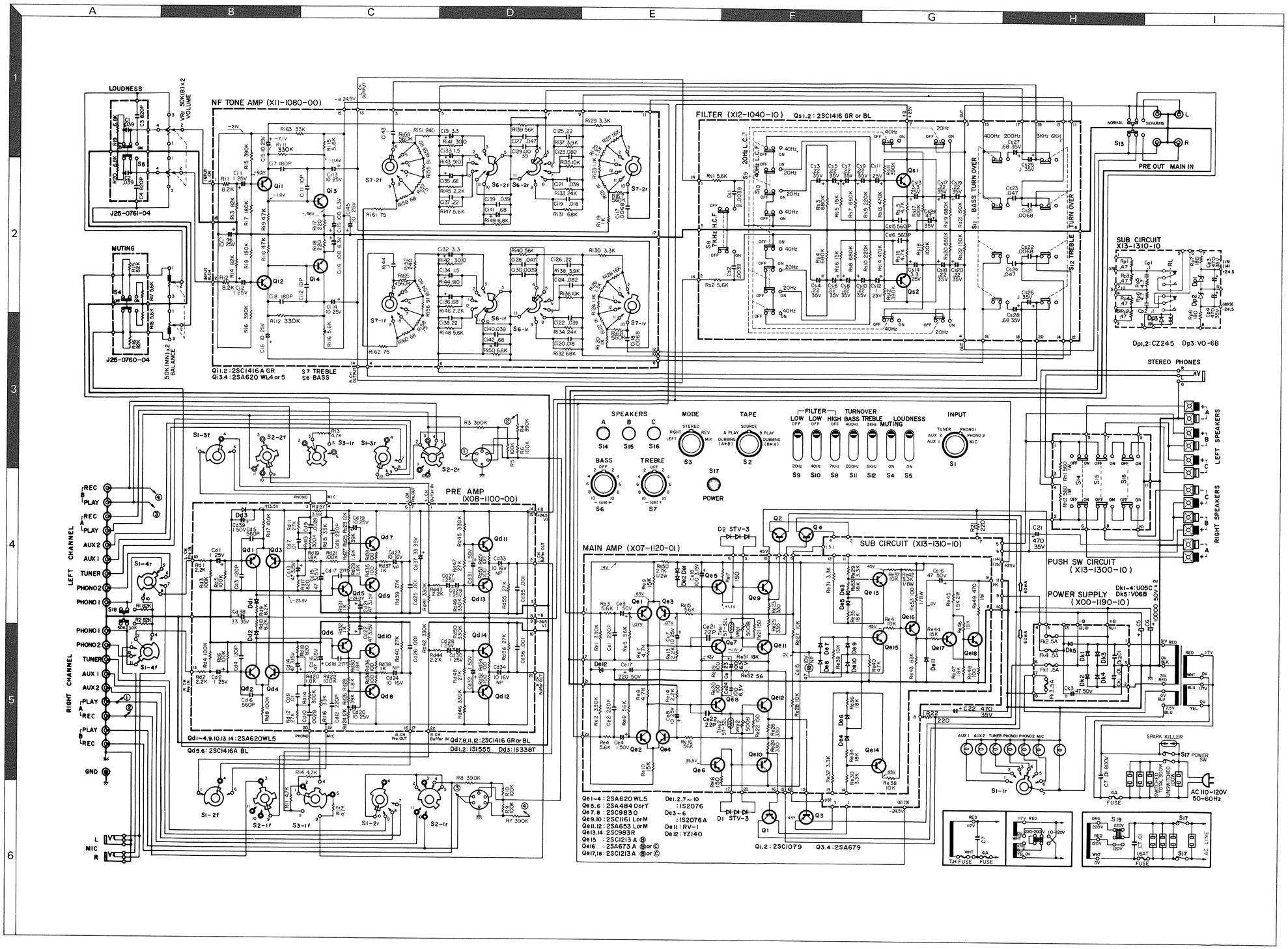

SPECIFICATIONS

MAIN AMPLIFIER SECTION

RMS Power Output	
Both channels driven	55 x 2 Watts into 8 ohms at 20 Hz – 20,000 Hz.
	60 x 2 Watts into 8 ohms at 1000 Hz.
	85 x 2 Watts into 4 ohms at 1000 Hz.
Each channel driven	70 x 2 Watts into 8 ohms at 1000 Hz.
	100 x 2 Watts into 4 ohms at 1000 Hz.
Dynamic Power Output	180 Watts into 8 ohms.
	300 Watts into 4 ohms.
Total Harmonic Distortion	0.4% at rated power into 8 ohms (20 Hz – 20,000 Hz).
	0.05% at ½ rated power into 8 ohms (1 kHz).
Intermodulation Distortion	0.4% at rated power into 8 ohms.
(60 Hz : 7 kHz = 4 : 1)	0.05% at ½ rated power into 8 ohms
Power Band Width	10 Hz – 50,000 Hz.
Signal to Noise Ratio	110 dB (short circuited).
Input Sensitivity / Impedance	1.0 V, 50 K ohms.
Damping Factor	30 at 8 ohms.
Speaker Impedance	Accept 4 ohms to 16 ohms.

PREAMPLIFIER SECTION

Input Sensitivity and Impedance			
Phono 1	2.5 mV	30 K ohms,	50 K ohms.
Phono 2	2.5 mV	50 K ohms.	
Tuner	150 mV	100 K ohms.	
Aux 1, 2	150 mV	100 K ohms.	
Tape Play 1, 2	150 mV	100 K ohms.	
Mic	2.5 mV	50 K ohms.	
Maximum Input Voltage (rms)			
Phono 1, 2	200 mV	T.H.D. 0.4% at 1,000 Hz	
Signal to Noise Ratio			
Phono 1, 2	65 dB		
Tuner	75 dB		
Aux 1, 2	75 dB		
Tape Play 1, 2	75 dB		
Mic	65 dB		
Output Voltage			
Tape Rec. A, B (PIN)	150 mV	100 ohms.	
Tape Rec. A, B (DIN)	40 mV	50 ohms.	
Pre-out	1.0 V	100 ohms.	
Frequency Response			
Phono 1, 2	RIAA Standard curve ± 0.2 dB		
Tuner, Aux, Tape Play	20 Hz – 50,000 Hz	–2 dB	
Mic	50 Hz – 10,000 Hz	–1 dB	
Tone Controls			
Bass (at turnover frequency 200 Hz)	± 6 dB at 100 Hz.		
Bass (at turnover frequency 400 Hz)	±10 dB at 100 Hz.		
Treble (at turnover frequency 3,000 Hz)	±10 dB at 10,000 Hz.		
Treble (at turnover frequency 6,000 Hz)	±6 dB at 10,000 Hz.		
Loudness Control (at –30 dB rated power)	+8 dB at 100 Hz.	+3 dB at 10,000 Hz.	
Low Filter 20 Hz	18 dB / oct.		
40 Hz	18 dB / oct.		
Hight Filter 7,000 Hz	6 dB / oct.		

GENERAL

Switches	
Speaker Selector	A, B, C, A+B, A+C, B+C, A+B+C.
Input Selector	AUX 1, AUX 2, TUNER, PHONO 1, PHONO 2, MIC.
Mode	L, R, Stereo, Rev, Mix.
Tape Monitor	Dubbing (A → B), A play, source, B play, Dubbing (B → A).
Others	Low & High Filter, Loudness, Muting, Turnover, Power.
AC Outlet	Switched 3, Unswitched 1.
Power Voltage	110-120V AC/220-240VAC. 50/60 Hz
Power Consumption	375 w at full power.
	22.5 w at no signal.
Dimensions	W 17-1/8" (435mm), H 6-1/32" (153mm), D 11-13/16" (300m
Net Weight	28.4 lbs. (12.9 kg).

KA-8004 KA-8004

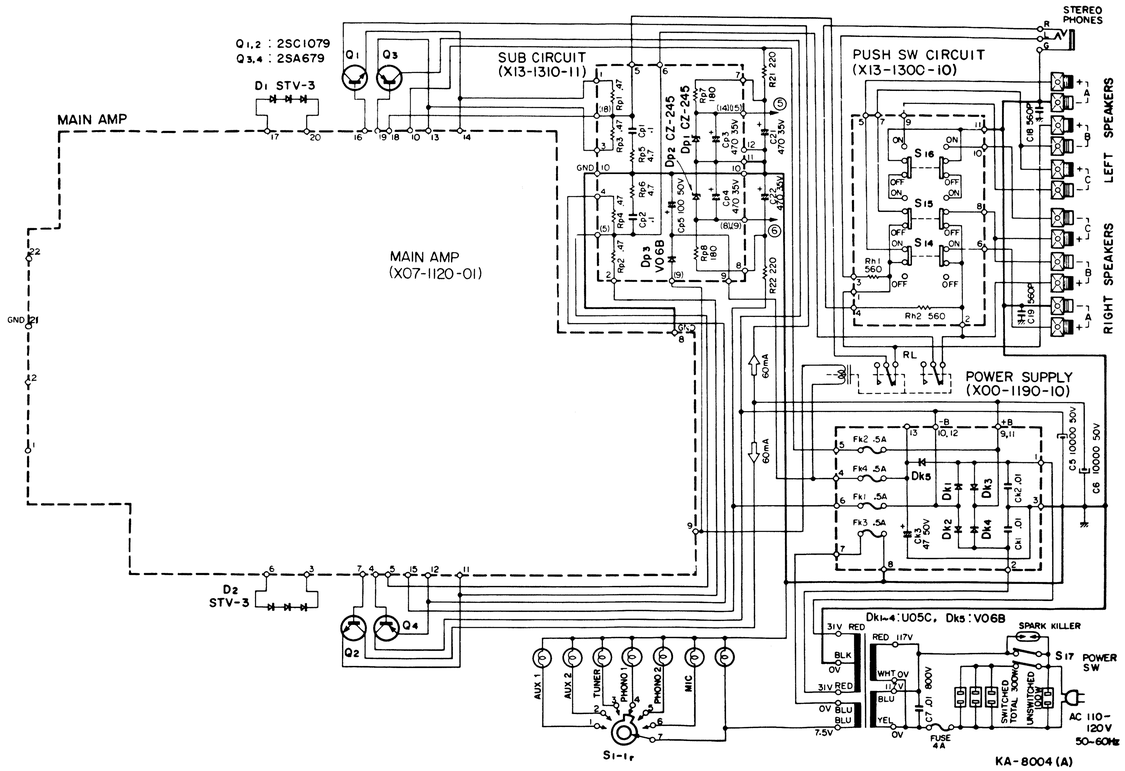

Preamp of KA-8004 is changed with (X08-1160-00) from 76 to 82 in the first two digit of the serial number.

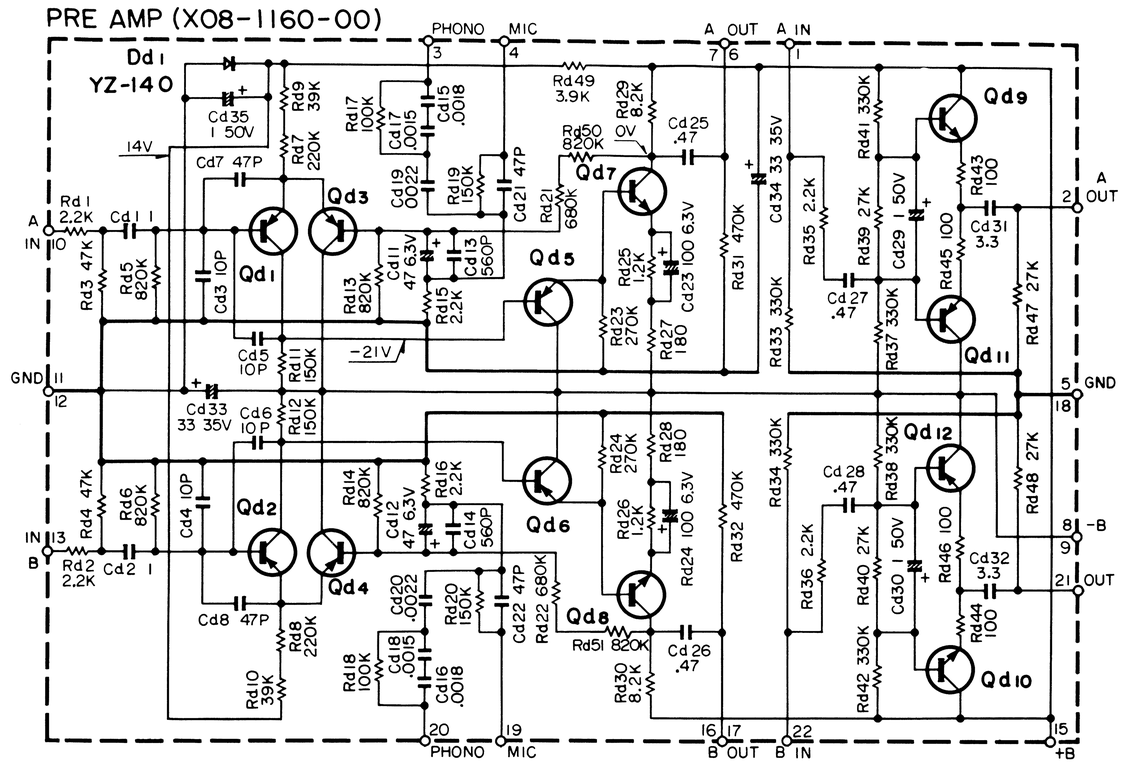

Qd1~6	2SA620WL5
Qd7, 8	2SC1416A (BL)
Qd9, 10	2SC1416 (GR) or (BL)
Qd11, 12	2SA620WL5
Dd1	YZ-140

18 18

KENWOOD SOLID STATE STEREO AMPLIFIER KA-8004

Main amp of KA-8004 is changed with (X07-1220-01) after serial No. 840,501.

MAIN AMP (X07-1220-01)

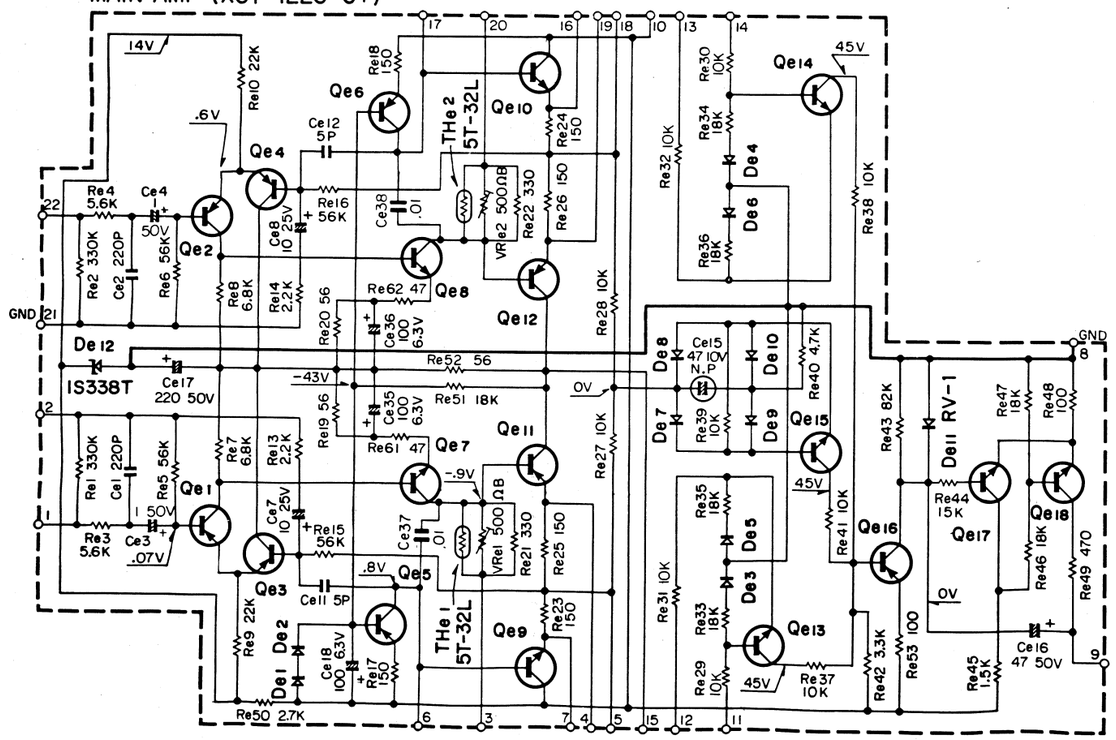

Tone amp of KA-8004 is changed to (X11-1080-02) after serial No. 840,501.

NF TONE AMP (X11-1080-02)

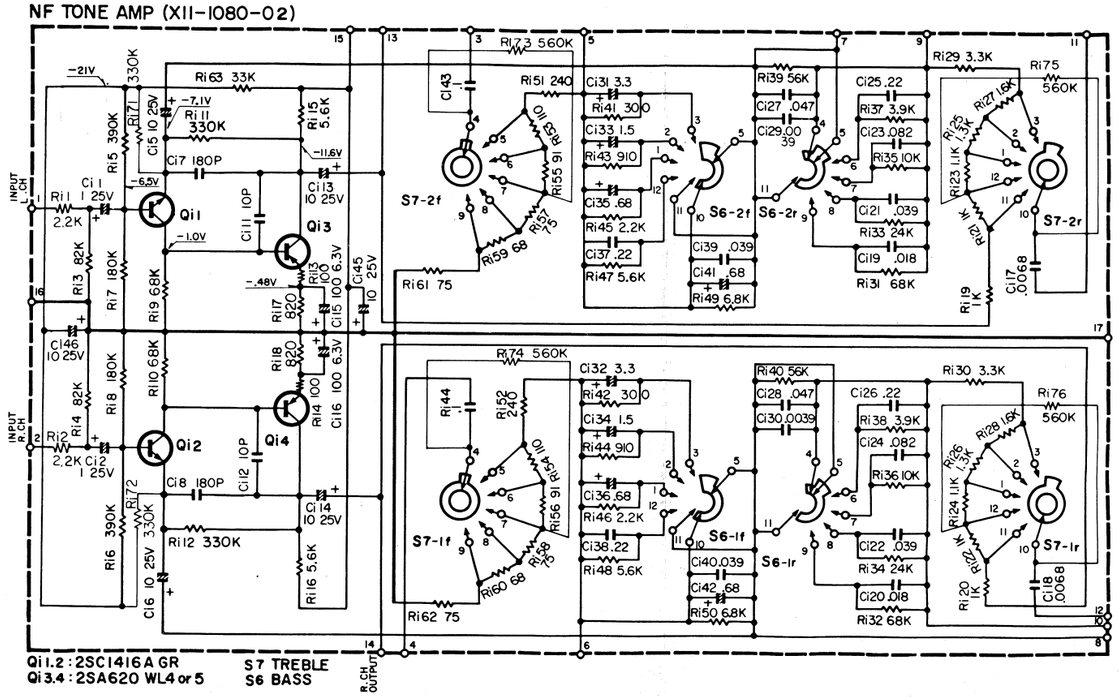

Qi1.2 : 2SC1416A GR
Qi3.4 : 2SA620 WL4 or 5

S7 TREBLE
S6 BASS

Qe1~4	2SA620WL (5)
Qe5, 6	2SA484 (Y) or (BL)
Qe7, 8	2SC983 (O)
Qe9, 10	2SC1161 (L) or (M)
Qe11, 12	2SA653 (L) or (M)
Qe13, 14	2SC983 (R)
Qe15	2SC1416 (GR) or (BL)
Qe16	2SA673A (B) or (C)
Qe17, 18	2SC1213A (B) or (C)
De1, 2	1S2076
De3~6	1S2076A
De7~10	1S2076
De11	RV-1
De12	1S338T
THe1	5T-32L