KENWOOD

SOLID STATE AUDIO-LAB SCOPE

KC-6060

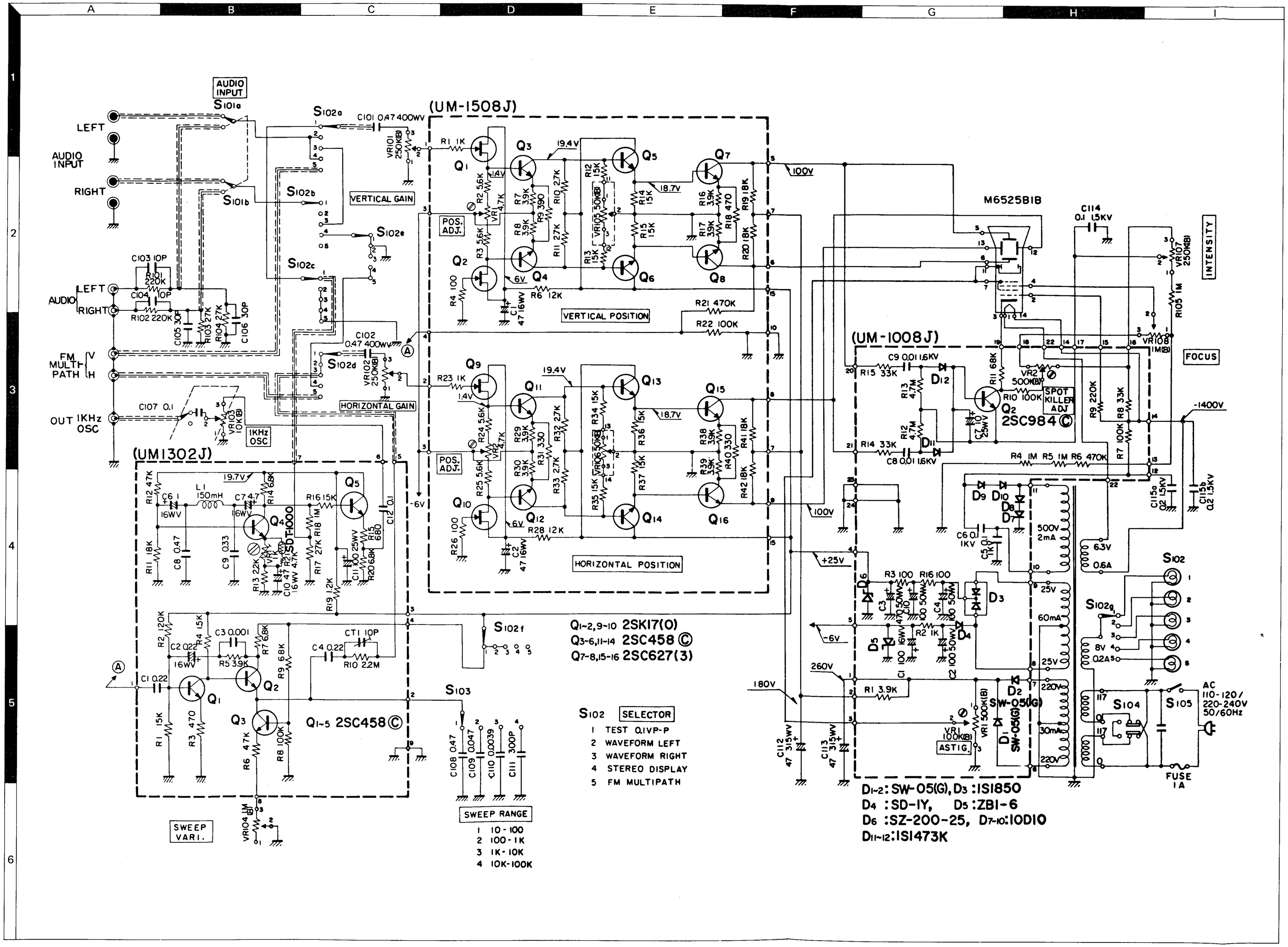

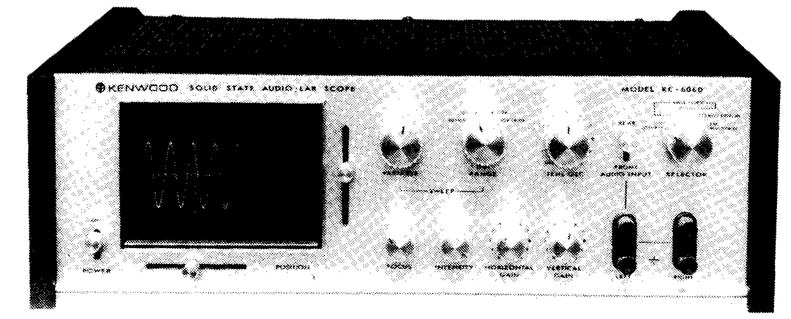

SPECIFICATIONS

VERTICAL AMPLIFIER

Sensitivity:	25 mV p-p/cm (63 mV p-p/inch) at front panel input 250 mV p-p/cm (630 mVp-p/inch) at rear panel input
Frequency Response :	3 Hz to 200 kHz –3 dB or less
Input Impedance :	250 k ohms
Input Capacity :	Less than 40 pF at front panel input Less than 60 pF at rear panel input

HORIZONTAL AMPLIFIER

Sensitivity :	25 mV p-p/cm (63 mV p-p/inch) at front panel input 250 mV p-p/cm (630 mV p-p/inch) at rear panel input
Frequency Response :	3 Hz to 200 kHz –3 dB or less
Input Impedance :	250 k ohms
Input Capacity :	Less than 40 pF at front panel input Less than 60 pF at rear panel input

SWEEP GENERATOR

Sweep Frequency :	10 Hz to 100 kHz in four steps
Synchronization :	Internal (–)

OSCILLATOR

Frequency :	1,000 Hz ±10%
Output Voltage :	Max. 1 V RMS
Calibration (TEST) :	0.1 V p-p ±5%

INPUT & OUTPUT :

Audio Input (Left & Right), front & rear FM Multipath (V & H)
Oscillator Output

SELECTOR SWITCH :

Test, Wave Form (Left & Right), Stereo Display & FM Multipath

GENERAL

Cathode Ray Tube :	3 inches
Semiconductors :	4 FETs, 19 Transistors & 14 Diodes
Power Voltage :	AC 110-120 V/220-240 V, 50/60 Hz
Power Consumption :	25 watts
Dimensions :	16-5/16" W, 5-5/32" H, 11-1/32" D
Weight :	17 lbs.