KENWOOD

AM-FM STEREO RECEIVER

KR-5400

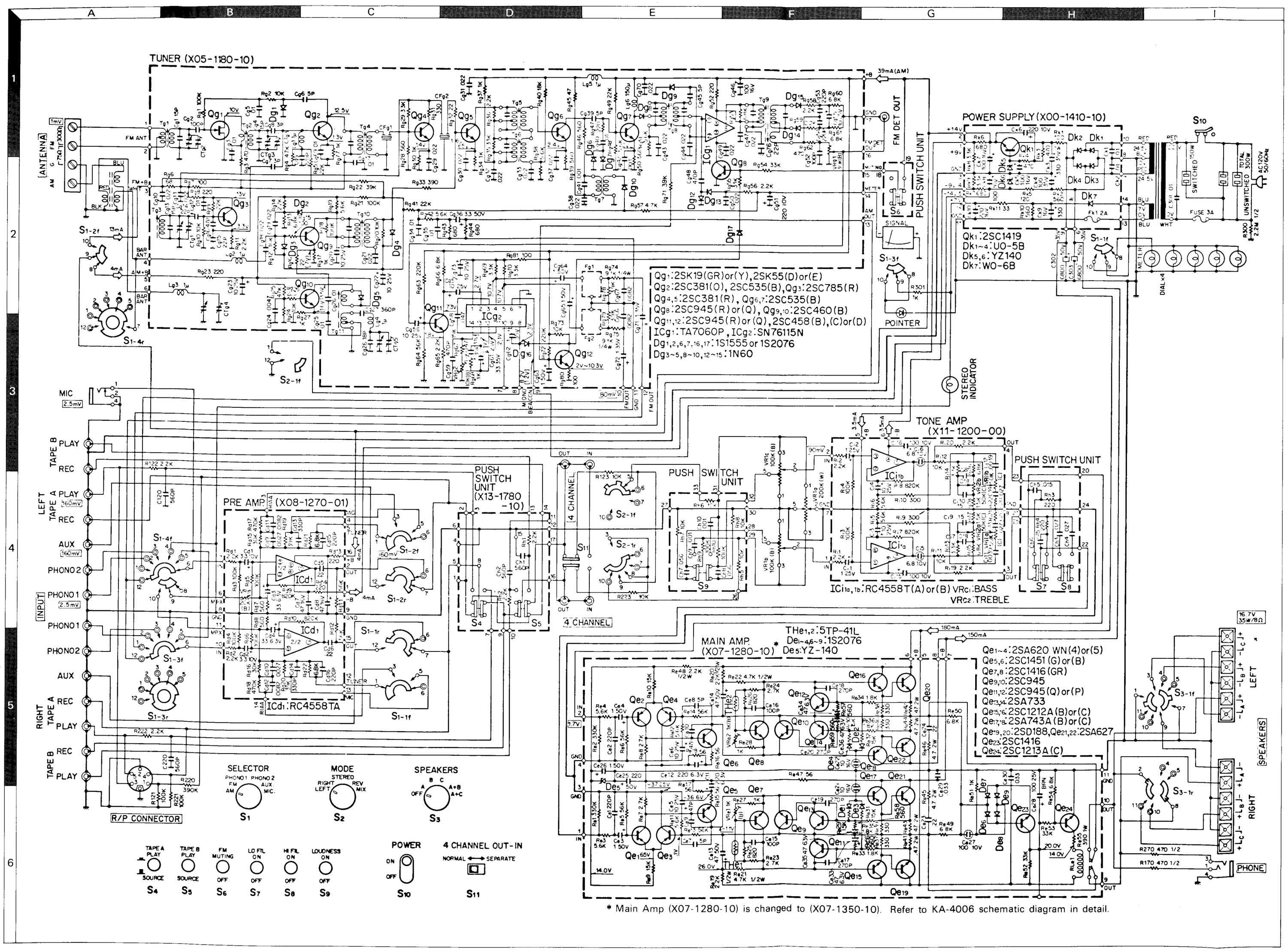

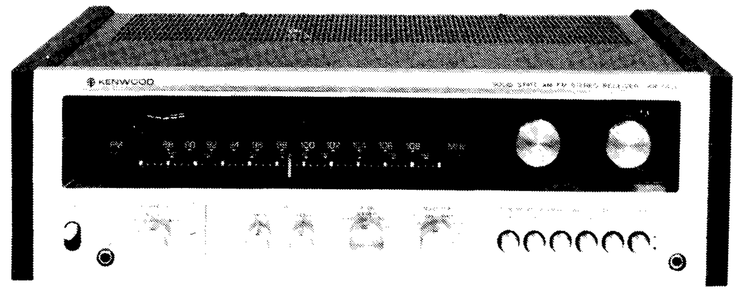

SPECIFICATIONS

FM TUNER SECTION

Frequency Range	88 MHz to 108 MHz 87.5 MHz to 108 MHz (FTZ Approved)
Usable Sensitivity (IHF)	1.9 μV
Quieting Slope	5 μV 48 dB, 10 μV 60 dB, 50 μV 68 dB
Frequency Response	20 Hz ~ 15,000 Hz $^{+0.5}_{-1.5}$ dB
Harmonic Distortion	0.3% Mono (at 400 Hz 100% modulation) 0.5% Stereo (at 400 Hz 100% modulation)
Signal to Noise Ratio	68 dB at 1 mV input
Image Rejection	70 dB
Selectivity (IHF ALT channel)	65 dB
IF Rejection	90 dB
Spurious Signal Rejection	90 dB
AM Suppression	70 dB
Capture Ratio	1.5 dB
Stereo Separation	35 dB at 1,000 Hz 27 dB at 10,000 Hz
Sub Carrier Suppression	60 dB
Antenna Impedance	300 ohms balanced & 75 ohms unbalanced

AM TUNER SECTION

Usable Sensitivity (IHF)	18 μV
Signal to Noise Ratio	45 dB at 1 mV input
Image Rejection	60 dB
Selectivity (IHF)	30 dB
IF Rejection	40 dB
Antenna	Built-in ferrite bar antenna, External antenna terminals

MAIN AMPLIFIER SECTION

RMS Power Output	
Both channels driven	35 Watts x 2 into 8 ohms at 20 Hz ~ 20,000 Hz 37 Watts x 2 into 8 ohms at 1,000 Hz 47 Watts x 2 into 4 ohms at 1,000 Hz
Dynamic Power Output	115 Watts into 8 ohms 150 Watts into 4 ohms
Total Harmonic Distortion	0.5% at rated power into 8 ohms 0.07% at 1/2 rated power into 8 ohms at 1000 Hz
Intermodulation Distortion (60 Hz: 7KHz = 4 : 1)	0.5% at rated power into 8 ohms 0.05% at 1/2 rated power into 8 ohms
Power Bandwidth	10 Hz ~ 30,000 Hz
Signal to Noise Ratio at 50 mW	55 dB
Damping Factor	50 at 8 ohms
Speaker Impedance	Accept 4 ohms to 16 ohms

PRE-AMPLIFIER SECTION

Input Sensitivity and Impedance	
Phono 1	2.5 mV. 50 Kohms
Phono 2	2.5 mV. 50 Kohms
Aux	150 mV. 80 Kohms
Tape Play A, B	150 mV. 80 Kohms
Mic	2.5 mV. 50 Kohms
Maximum Input Voltage (rms)	
Phono 1, 2	120 mV. T.H.D. 0.5% at 1,000 Hz
Signal to Noise Ratio (IHF A curve)	
Phono 1, 2	70 dB
Aux	90 dB
Tape Play A, B	90 dB
Mic	65 dB
Output Voltage and Impedance	
Tape Rec. A, B (pin)	150 mV. 100 ohms
(Din connector)	30 mV. 80 Kohms
4ch. out	150 mV.
Frequency Response	
Phono 1, 2	RIAA Standard curve ±1 dB
Aux, Tape Play	10 Hz ~ 40,000 Hz ±1 dB
Tone Controls	
Bass	±10 dB at 100 Hz
Treble	±10 dB at 10,000 Hz
Loudness Control (−30 dB)	+8 dB at 100 Hz +5 dB at 10,000 Hz
Low Filter 100 Hz	8 dB
High Filter 10,000 Hz	−10 dB

GENERAL

Switches	
Speaker Selector	OFF, A, B, C, A + B, A + C
Input Selector	AM–FM PHONO 1–PHONO 2–AUX–MIC
Mode	LEFT–RIGHT–STEREO–REV–MIX
Tape Monitor	A (ON SOURCE), B (ON SOURCE)
Others	LOW FILTER, HIGH FILTER, FM MUTING, LOUDNESS, MIC jack, PHONES jack
AC Outlet	Switched 1, Unswitched 2
Power Consumption	240 Watts at full power 30 Watts at no signal
Dimension	W18-15/16"(480 mm), H5-15/16" (151 mm) D13-9/16" (344 mm)
Weight	25.4 lbs. (11.5 Kg)